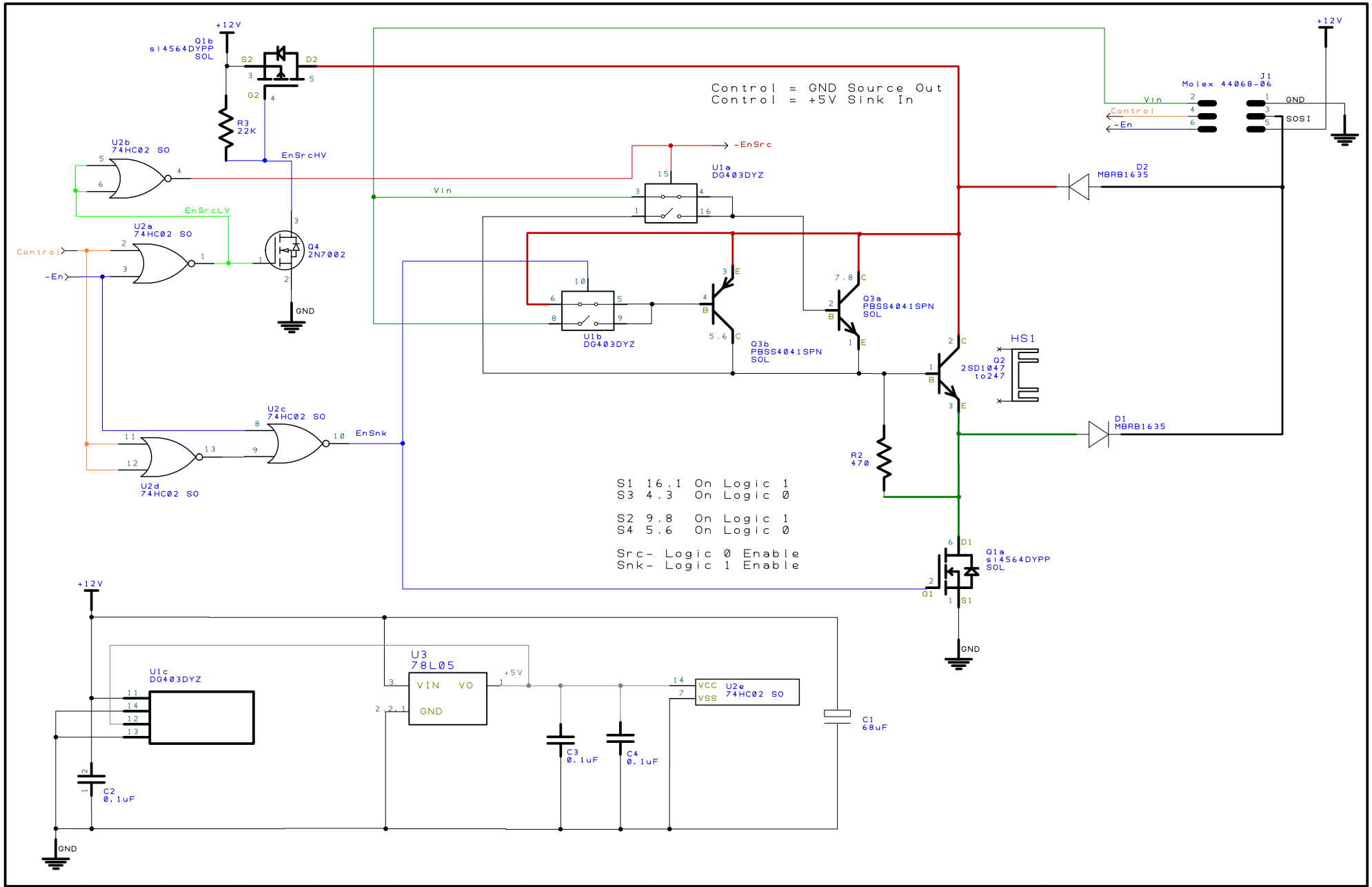

E	D	C	B	A	Drawn	Check	Projection Do Not Scale	SST Rev 04 Enable Added No ideal Diodes
Drn	Drn	Drn	Drn	Project Source Measure Unit Rev 04			Client Revision 4	
Chk	Chk	Chk	Chk	Title Source Sink Transistor Rev 04			Filename SST4.sch	Drawing No. A Sheet 1 of 1 of