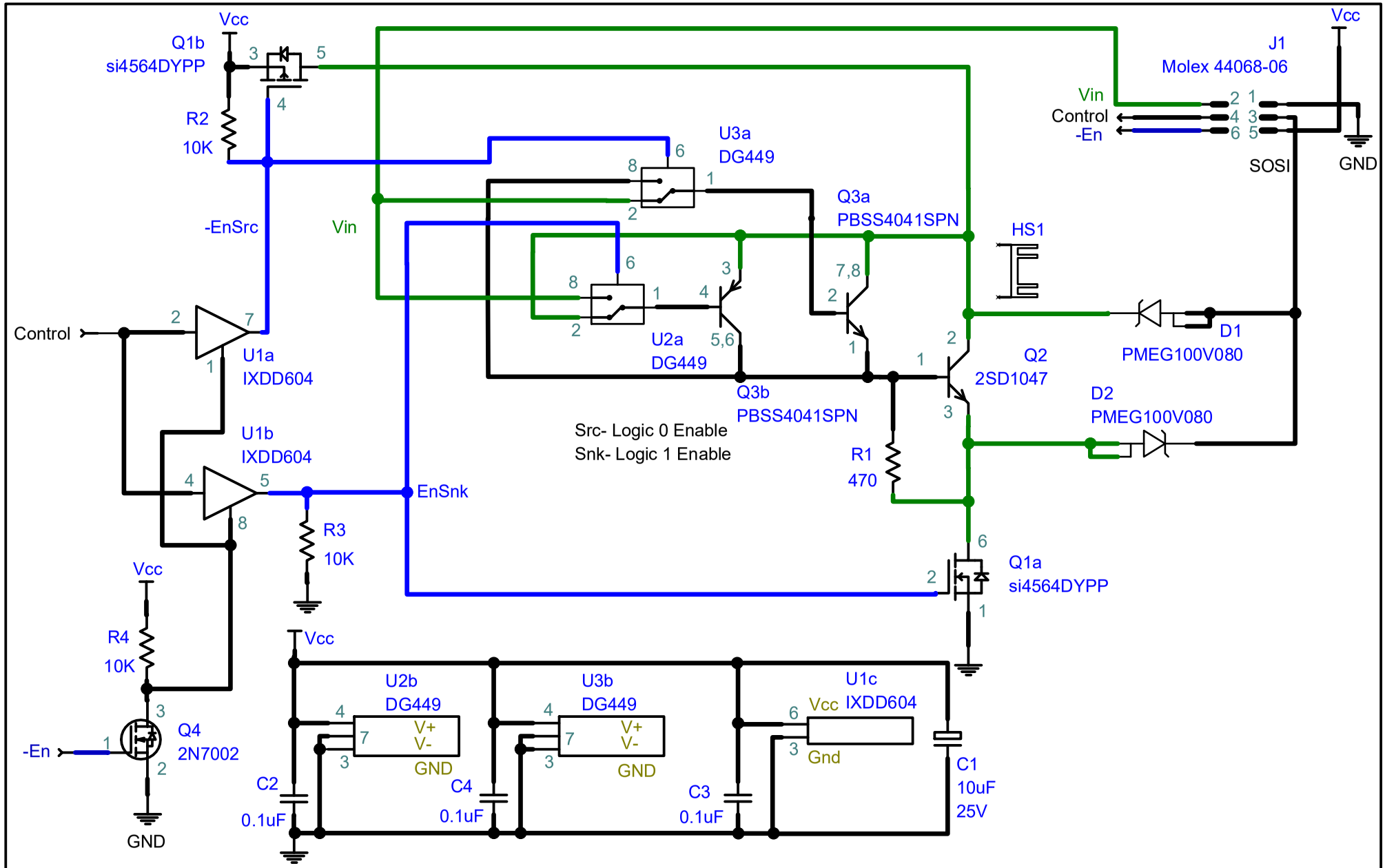

E	D	C	B	A	Drawn	Check	Projection Do Not Scale		SST Rev 06 New Enable New Diodes New Switches
Drn	Drn	Drn	Drn	Project Source Measure Unit Rev 02			Client **Revision 6**		
Chk	Chk	Chk	Chk	Title Source Sink Transistor Rev 06			Filename SST6.sch	Drawing No. A	Sheet of 1 of 1