Multi-Level Fuzzy Inference System for Cervical Cancer Risk Assessment

Ana Maria Alvarez Suarez – DVOR2C

Content

Introduction 1

Fuzzy Design 2

First Layer Subsystems 3

Second Layer 14

Third layer – Cervical Cancer Risk 15

Results 15

Bibliography 19

Introduction

Cervical cancer remains a major global health challenge, ranking as the fourth most common cancer in women with an estimated 660 000 new cases and 350 000 deaths in 2022. Over 80 % of deaths occur in low and middle-income countries, where lack of HPV vaccination, limited screening, and social determinants drive stark inequities. Incidence peaks between ages 35–44 (24.8 % of cases) and declines after 65, reflecting both biological susceptibility and gaps in early detection [1] [2] [3].

Despite being largely preventable through HPV vaccination and screening for precancerous lesions, persistent disparities in socio-structural, behavioral, and biological cofactors hinder elimination efforts. Risk emerges from a complex, interdependent web—infectious exposures (high-risk HPV, co-infections), sexual-reproductive history, hormonal and metabolic influences, nutrition and immune competence, hygiene practices, genetic susceptibility, and health-system access. Capturing this multifactorial uncertainty calls for a fuzzy-logic framework, which smoothly integrates overlapping risk continua and avoids artificial thresholds in clinical decision support [1] [3].

Fuzzy Design

A three-layer Mamdani type 1 fuzzy-logic architecture was developed to mirror the multifactorial nature of cervical-cancer risk. Layer 1 ingests eleven clinical and sociodemographic risk determinants. Layer 2 aggregates these into five intermediate "grouped" risk subsystems, reducing dimensionality while preserving the distinct contribution of each domain. Finally, Layer 3 fuses the five subsystem outputs into a single Cervical Cancer Risk score (Low/Medium/High). It was implemented using the Fuzzy Logic Designer Toolbox in Matlab

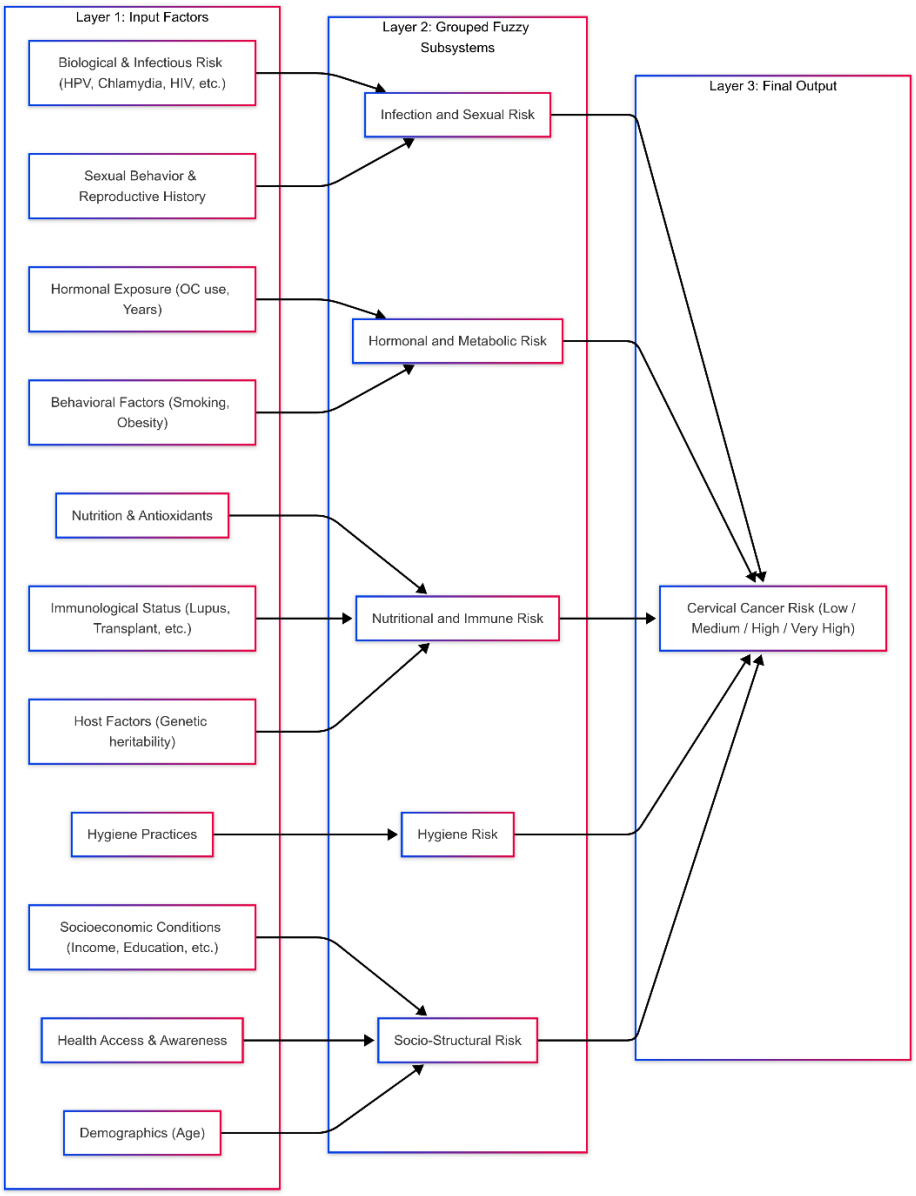

Figure 1. Fuzzy system diagram overview

First Layer

The first layer encapsulates all individual risk determinants as fuzzy inputs according to its odds ratio (OR); each with overlapping membership functions to model uncertainty.

Biological Infectious Risk

The Biological Infectious Risk (BIR) fuzzy subsystem quantifies an individual's infection-related risk on a continuous scale [0–1], reflecting the well-established role of various STIs and host factors in cervical carcinogenesis. Each input uses trapezoidal membership functions with a 0.4–0.6 overlap to model clinical uncertainty and to ensure smooth transitions between "Absent" and "Present" or "Low" and "High" states.

HPV & HPV_Type: Human papillomavirus infection is necessary for virtually all cervical cancers; persistent infection drives neoplastic transformation [4]. High-risk HPV types include 16, 18, 31, 33, 35, 39, 45, 51, 52, 56, 58, and 59, with types 16/18 responsible for ~70% of cases [2].

Chlamydia: Chlamydia trachomatis co-infection increases cervical cancer risk (pooled OR≈2.2) and promotes HPV persistence via DNA damage and impaired repair [5].

HIV: Human immunodeficiency viruses (HIV) are a sexually transmitted infection and occur by contact with or transfer corporal fluids. Women with HIV have a six-fold higher risk of cervical cancer (RR≈6.07) due to immunosuppression and HPV persistence [6].

HSV: Herpes simplex virus is a common infection and HSV-2 acts as a cofactor (OR≈3.0) by promoting inflammation and facilitating HPV integration [7]. The risk was modeled according to that, presence of HSV indicated a higher risk of having cervical cancer.

Bacterial Vaginosis: BV increases HPV acquisition (OR≈2.68) by altering the vaginal microbiome, so BV "Present" drives at least moderate risk [8].

Genital Warts: Caused by HPV 6/11 (low-risk types), genital warts do not predispose to cancer, so "Present" maps to Low InfectiousRisk [1]

Table 1. Input membership functions for Biological and Infectous Risk Fuzzy

Input Variable	Range	MF "Low/Absent" (trapmf)	MF "High/Present" (trapmf)
HPV	[0,1]	[-0.1 0 0 0.6] (Absent)	[0.4 1 1 1.1] (Present)
HPV_Type	[0,1]	[-0.1 0 0 0.6] (LowRisk)	[0.4 1 1 1.1] (HighRisk)
Chlamydia	[0,1]	[-0.1 0 0 0.6] (Absent)	[0.4 1 1 1.1] (Present)
HIV	[0,1]	[-0.1 0 0 0.6] (Absent)	[0.4 1 1 1.1] (Present)

Input Variable	Range	MF "Low/Absent" (trapmf)	MF "High/Present" (trapmf)
HSV	[0,1]	[-0.1 0 0 0.6] (Absent)	[0.4 1 1 1.1] (Present)
BacterialVaginosis	[0,1]	[-0.1 0 0 0.6] (Absent)	[0.4 1 1 1.1] (Present)
GenitalWarts	[0,1]	[-0.1 0 0 0.6] (Absent)	[0.4 1 1 1.1] (Present)

The output was modelled with three possible outcomes, low [-0.1 0 0 0.4], moderate [0.3 0.5 0.7] and high [0.6 1 1 1.1], which indicates the level of infectious risk of the patient.

Rules capture the gradual increase in inferred risk when well-established cofactors exceed clinical thresholds, mapping high-risk HPV types directly to High InfectiousRisk and reflecting their causal role in ~70 % of cervical cancers. Chlamydia's OR≈2.2 for cervical neoplasia justifies a Moderate setting, while HIV's six-fold elevation in cancer risk mandates a High outcome. HSV-2's cofactor effect (OR≈3.0) likewise triggers High risk, bacterial vaginosis' OR≈2.68 supports upgrading to Moderate, and genital warts (HPV 6/11) remain Low due to their negligible oncogenic potential.

Table 2. Rules for the Biological and Infectious System

Rule description
If HPV infection is present and the HPV type is high-risk, then the Biological Infectious Risk is High.
If Chlamydia infection is present, then the Biological Infectious Risk is Moderate
If HIV infection is present, then the Biological Infectious Risk is High
If HSV (Herpes Simplex Virus) infection is present, then the Biological Infectious Risk is High
If Bacterial Vaginosis (BV) infection is present, then the Biological Infectious Risk is Moderate
If Genital warts are present, then the Biological Infectious Risk is Low

Sexual Reproductive History

The SexualReproductiveRisk fuzzy subsystem translates four epidemiologically validated reproductive and sexual-behavior factors into a continuous risk score between 0 and 1.

Number of Sexual Partners: models cumulative HPV exposure, rising sharply up to about 4–7 lifetime partners—beyond which additional partners add little extra risk—consistent with observed odds ratios of approximately 1.5–2.3 for non-malignant disease and invasive cervical carcinoma in women with ≥4–7 partners [9].

Age at First Sexual Activity: captures the vulnerability of the immature cervical epithelium, with debut before age 18 associated with a 2.3–2.95-fold increase in invasive cervical cancer risk compared to ≥21 years [10].

Parity: reflects the hormonal and mechanical stresses of childbirth, with high parity (≥3 full-term births) conferring roughly 2.65× greater odds of cervical cancer versus low parity [3, 11].

Age at First Pregnancy: early first pregnancy (<17 years) carries up to a 4.4-fold increased risk, while pregnancy at 17–19 years yields an approximate 2.5-fold risk elevation relative to first births at ≥25 years [10].

Table 3. Input membership functions for Sexual and Reproductive History Fuzzy

Variable	Range	Low MF	Medium MF	High MF
NumberOfSexualPartners	[0–10]	trapmf [0 0 1 1.5]	trimf [1 2.5 4.5]	trapmf [3.5 6 10 10]
AgeAtFirstSexualActivity	[10–30]	trapmf [10 10 10 18]	trimf [15 18.5 24]	trapmf [20 23 30 30]
Parity	[0–10]	trapmf [0 0 1 1.5]	trimf [1 2.5 3.5]	trapmf [3 5 10 10]
AgeAtFirstPregnancy	[10–35]	trapmf [10 10 10 17]	trimf [15 18 21]	trapmf [20 25 35 35]

SexualReproductiveRisk is defined on [0–1] with three fuzzy levels—Low (trapmf [–0.1 0 0.25 0.5]), Moderate (trimf [0.3 0.5 0.7]), and High (trapmf [0.6 0.75 1 1.1])—ensuring smooth transitions in risk grading without abrupt cutoffs.

Table 4. Rules for the Sexual Reproductive History System

Rule Description
If the number of sexual partners is high and the age at first sexual activity is early, then sexual reproductive risk is high.
If parity is high and the age at first pregnancy is early, then sexual reproductive risk is high.
If the number of sexual partners is medium and the age at first sexual activity is medium, then sexual reproductive risk is moderate.
If parity is low and the age at first pregnancy is late, then sexual reproductive risk is low.
If the number of sexual partners is medium and the age at first sexual activity is early, then sexual reproductive risk is moderate
If the age at first sexual activity is early, then sexual reproductive risk is moderate.
If parity is medium and the age at first pregnancy is early, then sexual reproductive risk is moderate.

Hormonal Exposure

The Hormonal Exposure Risk subsystem quantifies how duration of oral-contraceptive use influences cervical-cancer risk. Membership functions were anchored at clinically meaningful breakpoints: under 5 years (< 10 % risk increase) for ShortTerm, 5–9 years (60 %–200 % increase) for MediumTerm, and ≥ 10 years (≥ 2× risk) for LongTerm [12] [13].

Use Of Oral Contraceptives: distinguishes non-users (risk baseline) from users whose duration matters.

Years using OC: ShortTerm (< 5 y) captures the modest ≈10 % risk rise seen in users under five years. MediumTerm (4–10 y): reflects the 60 %–200 % relative-risk increase documented for 5–9 y use. LongTerm (≥ 9 y): represents the doubling–quadrupling of risk after a decade of use (RR≈2.2–4.0) [14].

Table 5. Input membership functions for Hormonal Risk Fuzzy

Variable	Range	"Low" MF	"Moderate" MF	"High" MF
UseOfOralContraceptives	[0–1]	trapmf([-0.1 0 0 0.6])	—	trapmf([0.4 1 1 1.1])
YearsUsingOralContraceptives	[0–20]	trapmf([-1 0 0 5])	trimf([4 7.5 10])	trapmf([9 12 20 21])
HormonalRisk (output)	[0–1]	trapmf([-0.1 0 0.25 0.5])	trimf([0.3 0.5 0.7])	trapmf([0.6 0.75 1 1.1])

Output HormonalRisk spans [0–1] with "Low" ≤ 0.5, "Moderate" around 0.3–0.7, and "High" ≥ 0.6. Overlaps at 0.3–0.5 and 0.6–0.75 guarantee that small changes in duration produce gradual risk shifts rather than abrupt jumps. The defined rules are shown in the following table.

Table 6. Rules for the Hormonal Risk Fuzzy

Rule Description
If the use of oral contraceptives is yes and the years using oral contraceptives is long-term, then hormonal risk is high.
If the use of oral contraceptives is yes and the years using oral contraceptives is medium-term, then hormonal risk is high.
If the use of oral contraceptives is yes and the years using oral contraceptives is short-term, then hormonal risk is moderate.
If the use of oral contraceptives is no, then hormonal risk is low.

Behavioral factors

The BehavioralRisk subsystem fuzzifies three key lifestyle factors—smoking duration, cumulative tobacco exposure (pack-years), and obesity—to produce a continuous risk score for cervical cancer. By using overlapping trapezoidal and triangular membership functions, it reflects real-world variability and the latency of behavioral effects on cervical carcinogenesis.

Years of Smoking: risk increases modestly for <5 years (RR≈1.1), rises further for 5–9 years (RR≈1.6–3.0), and peaks for ≥10 years (RR≈2.2–4.0) before gradually declining after cessation [3].

Pack-Years: cumulative exposure shows a relative-risk of ≈1.7–2.1 at 10 pack-years and ≥2.2–4.0 at ≥20 pack-years, with risk returning toward baseline ≈15 years after quitting [3].

Obesity (BMI): women with BMI ≥ 30 kg/m^2 have a modestly elevated cervical-cancer incidence (HR≈1.14–1.49) and lower screening rates, compounding risk via delayed detection [15].

Table 7. Input membership functions for Behavioral Risk Fuzzy

Variable	Range	"Low" MF	"Moderate" MF	"High" MF
YearsOfSmoking	[0–30]	trapmf [0 0 3.5 5]	trimf [3.5 7.5 11.5]	trapmf [8.5 11.5 30 30]
PackYears	[0–40]	trapmf [0 0 7 10]	trimf [7 13 23]	trapmf [17 23 40 40]
BMI	[15–45]	trapmf [15 15 18.5 24.9]	trimf [22 27.5 32]	trapmf [28 32 45 45]

BehavioralRisk output is defined on [0–1] with three fuzzy levels—Low (≤ 0.5), Moderate (≈ 0.3–0.7), High (≥ 0.6)—and overlaps at 0.3–0.5 and 0.6–0.75 to ensure smooth transitions in risk as behaviors change incrementally. The defined rules are shown in the following table.

Table 8. Rules for the Befavioral factor Fuzzy

Rule Description
If Years of Smoking is LongTerm and PackYears is High and BMI is Obese, then Behavioral Risk is High.
If Years of Smoking is MediumTerm and PackYears is Medium and BMI is Overweight, then Behavioral Risk is High.
If Years of Smoking is ShortTerm and PackYears is Low and BMI is Normal, then Behavioral Risk is Low.
If Years of Smoking is MediumTerm and PackYears is High and BMI is Normal, then Behavioral Risk is High.
If Years of Smoking is LongTerm and PackYears is Low and BMI is Normal, then Behavioral Risk is Moderate.
If Years of Smoking is ShortTerm and PackYears is Low and BMI is Obese, then Behavioral Risk is Moderate.

Hygiene Practices

The HygienePracticesRisk subsystem fuzzifies five intimate-hygiene behaviors to produce a continuous risk score [0–1] for cervical cancer.

Use Of Vaginal Cleansers: distinguishes women who douche with solutions (vinegar, lemon, salt, sugar) from those who do not; solution-based douching increases risk of abnormal cervical lesions ~7.4-fold compared to water only [16].

BathFrequency: models daily versus less-than-daily bathing; bathing less often than daily doubles–triples HPV acquisition risk (HR=2.6; 95% CI 1.0–6.5) compared with daily showering [3].

BathDuringMenstruation: captures whether bathing continues during menses; bathing during menstruation helps maintain microbiota balance and reduces HPV persistence, whereas skipping bath during menses elevates risk [3].

MenstrualMaterialUsed: contrasts sanitary pads with old cloth; use of old cloth is a significant risk factor for cervical neoplasia in case–control studies ($p<0.001$) [3].

WashAfterIntercourse: indicates whether genital washing occurs postcoitally; intravaginal washing shortly after sex may reduce HPV acquisition, whereas absence of postcoital hygiene facilitates persistence [16]

Table 9. Input membership functions for Hygiene Practices Fuzzy

Variable	Range	"Low" MF	Moderate	"High" MF
UseOfVaginalCleansers	[0–1]	trapmf [–0.1 0 0 0.6] (No)	—	trapmf [0.4 1 1 1.1] (Yes)
BathFrequency	[0–1]	trapmf [–0.1 0 0 0.6] (Daily)	—	trapmf [0.4 1 1 1.1] (LessThanDaily)
BathDuringMenstruation	[0–1]	trapmf [–0.1 0 0 0.6] (Yes)	—	trapmf [0.4 1 1 1.1] (No)
MenstrualMaterialUsed	[0–1]	trapmf [–0.1 0 0 0.6] (SanitaryPad)	—	trapmf [0.4 1 1 1.1] (OldCloth)
WashAfterIntercourse	[0–1]	trapmf [–0.1 0 0 0.6] (Yes)	—	trapmf [0.4 1 1 1.1] (No)

Output HygieneRisk uses [0–1] with three fuzzy levels—Low (trapmf [–0.1 0 0.25 0.5]), Moderate (trimf [0.3 0.5 0.7]), High (trapmf [0.6 0.75 1 1.1])—overlapping in [0.3–0.5] and [0.6–0.75] to guarantee that small changes in hygiene practices yield gradual risk adjustments rather than abrupt jumps. The defined rules are shown in the following table.

Table 10. Rules for the Hyfine Practices Fuzzy

Rule Description
If the use of vaginal cleansers is yes and bath frequency is less than daily and bath during menstruation is no and menstrual material used is old cloth and wash after intercourse is no, then hygiene risk is high.
If the use of vaginal cleansers is no and bath frequency is daily and bath during menstruation is yes and menstrual material used is sanitary pad and wash after intercourse is yes, then hygiene risk is low.
If the use of vaginal cleansers is yes and bath frequency is daily and bath during menstruation is yes and menstrual material used is sanitary pad and wash after intercourse is yes, then hygiene risk is moderate.
If the use of vaginal cleansers is no and bath frequency is less than daily and bath during menstruation is yes and menstrual material used is old cloth and wash after intercourse is no, then hygiene risk is high.
If the use of vaginal cleansers is no and bath frequency is daily and bath during menstruation is yes and menstrual material used is sanitary pad and wash after intercourse is no, then hygiene risk is moderate.
If the use of vaginal cleansers is no and bath frequency is daily and bath during menstruation is yes and menstrual material used is old cloth and wash after intercourse is yes, then hygiene risk is moderate.

Nutritional and Dietary Factors

The NutritionalRisk subsystem translates dietary and antioxidant intake into a fuzzy risk score for cervical cancer, capturing the protective effects of micronutrients without imposing rigid thresholds. Inputs reflect whether a balanced diet is consumed and quantify daily intake of vitamin C, vitamin E, and overall antioxidants (CDAI index).

Balanced Diet (0–1): “No” (≤ 0.6) flags diets lacking diverse fruits/vegetables linked to 30 %–40 % higher cervical-cancer rates; “Yes” (≥ 0.4) reflects protective dietary patterns.

Vitamin C Intake (0–200 mg/day): “Low” (< 50 mg) captures sub-optimal intake that each additional 50 mg/day reduces neoplasia risk by ~8 % (OR = 0.92 per 50 mg); “Medium” (35–165 mg) spans RDA (75–90 mg) ; “High” (> 150 mg) aligns with maximal chemopreventive benefit (RR≈0.58) [17].

Vitamin E Intake (0–30 mg/day): “Low” (< 7 mg) denotes below-average adult intake; “Medium” (7–17 mg) covers RDA (15 mg); “High” (> 15 mg) corresponds to OR≈0.58 for cervical-neoplasia reduction [3].

Antioxidant Intake (0–100 CDAI): “Low” (< 30) reflects CDAI levels tied to increased HPV persistence; “Medium” (21–79) covers typical diets; “High” (> 70) indicates robust antioxidant capacity associated with lower dysplasia rates [18].

Table 11. Input membership Functions for Diet Fuzzy

Variable	Range	Low MF	Medium MF	High MF
BalancedDiet	[0–1]	trapmf [–0.1 0 0 0.6]	—	trapmf [0.4 1 1 1.1]
VitaminCIntake	[0–200]	trapmf [–10 0 35 50]	trimf [35 100 165]	trapmf [135 165 200 210]
VitaminEIntake	[0–30]	trapmf [–1 0 5 7]	trimf [5 11 17]	trapmf [13 17 30 32]
AntioxidantIntake	[0–100]	trapmf [–10 0 21 30]	trimf [21 50 79]	trapmf [70 85 100 110]

Output NutritionalRisk on [0–1] is labeled High (trapmf [–0.1 0 0.25 0.5]), Moderate (trimf [0.35 0.55 0.75]), and Low (trapmf [0.65 0.85 1 1.1]), with overlaps at 0.35–0.5 and 0.65–0.75 ensuring incremental dietary improvements yield gradual risk reductions rather than abrupt shifts. Rules then combine poor diet and low micronutrient levels into High risk, while good diet and high antioxidant intake yield Low risk.

Table 12. Rules for Diet Fuzzy

Rule Description
If the balanced diet is no and vitamin C intake is low and vitamin E intake is low and antioxidant intake is low, then nutritional risk is high.
If the balanced diet is no and vitamin C intake is medium and vitamin E intake is medium and antioxidant intake is medium, then nutritional risk is moderate.
If the balanced diet is no and vitamin C intake is high and vitamin E intake is high and antioxidant intake is high, then nutritional risk is low.
If the balanced diet is yes and vitamin C intake is low and vitamin E intake is low and antioxidant intake is low, then nutritional risk is moderate.
If the balanced diet is yes and vitamin C intake is medium and vitamin E intake is medium and antioxidant intake is medium, then nutritional risk is low.
If the balanced diet is yes and vitamin C intake is high and vitamin E intake is high and antioxidant intake is high, then nutritional risk is low.

Immunological Status

The Immunological Risk subsystem integrates autoimmune disease status, immunosuppressive therapy duration, and solid-organ transplant history to quantify host immune competence as it relates to cervical-cancer susceptibility.

Rheumatoid Arthritis: chronic inflammation and disease-modifying therapies in RA patients increase cervical-dysplasia and cancer risk; although a large meta-analysis (15 studies; 297 cancers) reported SIR 0.87 (95 % CI 0.72–1.05), cohort data show up to a 20 %–30 % elevation in solid-tumor risk and marked increases (SIR 3.65; 95 % CI 1.65–6.42) in some populations [19].

Systemic Lupus Erythematosus: SLE patients exhibit 1.66× higher cervical-cancer risk (RR 1.66; 95 % CI 1.16–2.36) and up to ~3× greater odds of high-grade cervical lesions, independent of immunosuppressive therapy, due to immune dysregulation and HPV persistence [19].

Immunosuppressive Agents (years): prolonged use (>3 years) of immunosuppressants in transplant or autoimmune therapy doubles to quadruples odds of cervical intraepithelial neoplasia (OR 4.6 for high-grade lesions) and increases HPV persistence; all users should undergo biannual Pap-smear surveillance [19].

OrganTransplant: solid-organ transplant recipients face a 3.3× higher incidence of in situ cervical cancer (SIR 3.3; 95 % CI 2.6–4.2) and a two-fold overall malignancy risk (SIR≈2.0–4.0), driven by lifelong immunosuppression and oncogenic-virus reactivation [20].

Table 13. Input membership functions for Immune Status Fuzzy

Variable	Range	"Low/No" MF	"Medium/ShortTerm" MF	"High/Yes/LongTerm" MF
RheumatoidArthritis	[0–1]	trapmf [–0.1 0 0 0.6] (No)	—	trapmf [0.4 1 1 1.1] (Yes)
SystemicLupusErythematosus	[0–1]	trapmf [–0.1 0 0 0.6] (No)	—	trapmf [0.4 1 1 1.1] (Yes)
ImmunosuppressiveAgents (yrs)	[0–10]	trapmf [–1 0 0 0.9] (None)	trimf [0.6 2 3.4] (ShortTerm)	trapmf [2.8 4 10 11] (LongTerm)
OrganTransplant	[0–1]	trapmf [–0.1 0 0 0.6] (No)	—	trapmf [0.3 1 1 1.1] (Yes)

Output ImmunologicalRisk spans [0–1] with Low (trapmf [–0.1 0 0.25 0.5]), Moderate (trimf [0.3 0.5 0.7]), and High (trapmf [0.6 0.75 1 1.1]), overlapping in the 0.3–0.5 and 0.6–0.75 ranges to ensure gradual risk escalation as immune suppression intensifies rather than abrupt category shifts. The defined rules are shown in the following table.

Table 14. Rules for the Immune Status Fuzzy

Rule Description
If rheumatoid arthritis is yes and systemic lupus erythematosus is yes and the use of immunosuppressive agents is long-term and organ transplant is yes, then immunological risk is high.
If rheumatoid arthritis is yes and systemic lupus erythematosus is yes and the use of immunosuppressive agents is short-term and organ transplant is no, then immunological risk is moderate.
If rheumatoid arthritis is no and systemic lupus erythematosus is no and the use of immunosuppressive agents is none and organ transplant is no, then immunological risk is low.
If rheumatoid arthritis is no and systemic lupus erythematosus is yes and the use of immunosuppressive agents is short-term and organ transplant is no, then immunological risk is moderate.
If rheumatoid arthritis is no and systemic lupus erythematosus is no and the use of immunosuppressive agents is long-term and organ transplant is no, then immunological risk is high.
If rheumatoid arthritis is yes and systemic lupus erythematosus is no and the use of immunosuppressive agents is none and organ transplant is no, then immunological risk is moderate.

Host Factors

The HostFactorsRisk subsystem converts the estimated heritability of cervical-cancer susceptibility into a fuzzy "HostRisk" score on [0–1], acknowledging that genetic predisposition contributes roughly 27 %–36 % of inter-individual variation in risk.

GeneticHeritability: represents the proportion of risk variance attributable to common host variants (HLA at 6p21.3, PAX8 at 2q14.1, GSDMB at 17q12, CLPTM1L at 5p15.33); family and twin studies estimate 11 %–15 % for in situ and 22 %–34 % for invasive disease, with GWAS attributing ~27 %–36 % to polygenic effects.

Table 15. Input membership functions for Host Factors Fuzzy

Variable	Range	"Low" MF	"Medium" MF	"High" MF
GeneticHeritability	[0–1]	trapmf([-0.1 0 0 0.3])	trimf([0.2 0.5 0.8])	trapmf([0.7 0.85 1 1.1])

Output HostRisk uses [0–1] with "Low" (≤0.5), "Moderate" (≈0.4–0.8), and "High" (≥0.7) fuzzy sets overlapping in 0.4–0.5 and 0.7–0.8 to ensure smooth escalation of risk as genetic liability increases rather than abrupt classification shifts. Rules were defined as follows:

Table 16. Rules for the Host Factos Fuzzy

Rule Description
If genetic heritability is low, then host risk is low.
If genetic heritability is medium, then host risk is moderate.
If genetic heritability is high, then host risk is high.

Demographic Factors

The **DemographicRisk** subsystem translates a woman's age into a fuzzy risk score for cervical cancer, reflecting the well-documented epidemiological pattern that incidence rises after age 25, peaks between 35–44, then declines after 65.

Table 17. Input membership functions for Demographic Fuzzy

Variable	Range	"Young" MF	"MiddleAged" MF	"Older" MF	"Elderly" MF
Age	[15–85]	trapmf [15 15 22 28]	trimf [22 35 48]	trapmf [42 52 65 75]	trapmf [60 70 85 85]

Output DemographicRisk spans [0–1] with three fuzzy levels—Low (trapmf [–0.1 0 0.25 0.5]), Moderate (trimf [0.3 0.5 0.7]), High (trapmf [0.6 0.75 1 1.1])—overlapping at 0.3–0.5 and 0.6–0.75 to ensure gradual risk transitions as age moves through critical screening and incidence windows.

Table 18. Rules for Demographic Fuzzy

Rule Description
If age is young, then demographic risk is low.
If age is middle-aged, then demographic risk is high.
If age is older, then demographic risk is moderate.
If age is elderly, then demographic risk is low.

Socioeconomic Conditions

The Socioeconomic Risk subsystem translates five key social determinants into a continuous [0–1] risk score for cervical cancer, using overlapping fuzzy membership functions to capture gradations rather than hard cut-offs.

Education Level: years of formal schooling, where low education (< 5 y) raises risk (OR≈1.50 vs 1–5 y) and high education (> 12 y) is protective.

Housing Type: index 0–5 reflecting material quality; living in poor housing (mud or thatch) doubles risk compared with sound housing [21].

Place Of Residence: rural versus urban setting, with rural women facing ~20 %–40 % higher incidence and mortality due to limited services [21].

Marital Status: unmarried women have higher late-stage diagnosis and worse survival (hazard ratio≈1.3–1.6) than married peers [22].

Monthly Household Income: low income (< $2 000/mo) counties show rising distant-stage incidence (4.4 % / yr) and mortality, while higher income is protective [21].

Table 19. Input membership functions for Socio Economic Fuzzy

Variable	Range	"Low" MF	"Medium" MF	"High" MF
EducationLevel (years)	[0–20]	trapmf [0 0 5 8]	trimf [6 10 14]	trapmf [12 16 20 20]
HousingType (0–5 index)	[0–5]	trapmf [0 0 1 2]	trimf [1.5 2.5 3.5]	trapmf [3 4 5 5]
PlaceOfResidence (0–5)	[0–5]	trapmf [0 0 1 2]	trimf [1.5 2.5 3.5]	trapmf [3 4 5 5]
MaritalStatus (0–5)	[0–5]	trapmf [0 0 1 2]	trimf [1.5 2.5 3.5]	trapmf [3 4 5 5]
MonthlyHouseholdIncome	[0–6000]	trapmf [0 0 1000 2000]	trimf [1500 3000 4500]	trapmf [4000 5000 6000 6000]

Output SocioeconomicRisk on [0–1] uses "High" (trapmf [–0.1 0 0.25 0.5]), "Moderate" (trimf [0.3 0.5 0.7]), and "Low" (trapmf [0.6 0.75 1 1.1]), with overlaps at 0.3–0.5 and 0.6–0.75 to ensure incremental improvements in socioeconomic conditions yield gradual reductions in risk rather than abrupt changes. The rules were defined as follows:

Table 20. Rules for Socio Economic Fuzzy

Rule description
If Education Level is Low and Housing Type is Poor and Place of Residence is Rural and Marital Status is Single and Monthly Household Income is Low, then Socioeconomic Risk is High.
If Education Level is Medium and Housing Type is Average and Place of Residence is Suburban and Marital Status is Married and Monthly Household Income is Medium, then Socioeconomic Risk is Moderate.
If Education Level is High and Housing Type is Good and Place of Residence is Urban and Marital Status is Divorced and Monthly Household Income is High, then Socioeconomic Risk is Low.
If Education Level is High and Housing Type is Poor and Place of Residence is Rural and Marital Status is Single and Monthly Household Income is Low, then Socioeconomic Risk is Moderate.
If Education Level is Low and Housing Type is Average and Place of Residence is Suburban and Marital Status is Married and Monthly Household Income is Medium, then Socioeconomic Risk is Low.

If Education Level is Medium and Housing Type is Poor and Place of Residence is Suburban and Marital Status is Single and Monthly Household Income is Medium, then Socioeconomic Risk is Moderate.
If Education Level is Low and Housing Type is Good and Place of Residence is Rural and Marital Status is Divorced and Monthly Household Income is Low, then Socioeconomic Risk is High

Health Access and Awareness

The Health Access Risk subsystem evaluates how access barriers, service utilization, and awareness levels combine to influence cervical-cancer screening and prevention outcomes [23].

HealthFacilityAccess: reflects geographic and transportation barriers to screening and treatment; rural women travel > 9 km and wait > 10 min for colposcopy versus 4.2 km and 4.9 min in nonrural areas, greatly delaying care

UtilizedHealthServices: measures whether preventive services have ever been used; only 14.7 % of eligible health-care workers accessed screening in one study, illustrating low uptake even among providers

VaccinationAwareness: quantifies knowledge of HPV vaccination benefits; awareness remains low (< 10 % know vaccine prevents cervical cancer) and strongly predicts uptake and subsequent screening behavior.

PapSmearAwareness: captures understanding of Pap testing; only 41 % recognize Pap smears prevent cervical cancer, limiting screening participation and early detection

Table 21. Input membership functions for Health Access System

Variable	Range	"Low" MF	"Medium" MF	"High" MF
HealthFacilityAccess	[0–5]	trapmf [0 0 1.7 2.3] (Poor)	trimf [1.7 2.5 3.3] (Moderate)	trapmf [3 4 5 5] (Good)
UtilizedHealthServices	[0–1]	trapmf [–0.1 0 0 0.6] (No)	—	trapmf [0.4 1 1 1.1] (Yes)
VaccinationAwareness	[0–100]	trapmf [0 0 30 40] (Low)	trimf [30 50 70] (Medium)	trapmf [60 80 100 100] (High)
PapSmearAwareness	[0–100]	trapmf [0 0 30 40] (Low)	trimf [35 55 75] (Medium)	trapmf [60 80 100 100] (High)

HealthAccessRisk is scaled [0–1] and labeled High (trapmf [–0.1 0 0.25 0.5]), Moderate (trimf [0.3 0.5 0.7]), and Low (trapmf [0.6 0.75 1 1.1]). Overlaps at 0.3–0.5 and 0.6–0.75 ensure that even small improvements in access, service use, or awareness produce a gradual reduction in access-related risk rather than a sudden category shift.

Table 22. Rules for the Health Access Fuzzy

Rule Description
If health facility access is poor and utilized health services is no and vaccination awareness is low and Pap smear awareness is low, then health access risk is high.

If utilized health services is yes and vaccination awareness is medium and Pap smear awareness is medium, then health access risk is moderate.
If health facility access is good and utilized health services is yes and vaccination awareness is high and Pap smear awareness is high, then health access risk is low.
If health facility access is good and utilized health services is no, then health access risk is moderate.
If health facility access is moderate and utilized health services is no and vaccination awareness is low, then health access risk is high.
If health facility access is poor and utilized health services is yes and vaccination awareness is medium, then health access risk is high.

Second Layer

Acts as an abstraction layer, condensing multiple low-level input variables into a smaller set of interpretable intermediate risks, making the final risk estimation more robust, interpretable, and modular.

Infection and Sexual Risk

This subsystem merges the Biological & Infectious Risk with Sexual Behavior & Reproductive History to produce a 0–10 risk score for infection-driven cervical carcinogenesis. Overlapping “Low–Moderate–High” membership functions (25–50 % overlap) capture uncertainty in viral persistence, co-infection cofactors, and reproductive exposures, while nine fuzzy rules map combinations of moderate/high infection or sexual risk directly to elevated InfectionSexualRisk.

Hormonal and Metabolic Risk

HormonalMitogenicRisk quantifies the proliferative stimulus of hormonal exposure together with behavioral co-factors. Fuzzy sets “Low/Medium/High” for each input model dose–response evidence that long-term contraceptive use (≥9 years) doubles-quadruples risk and heavy smoking or obesity further amplify oxidative stress. Weighted rules assign greater influence to hormonal factors when exposures are high.

Nutritional and Immune Risk

By combining Nutrition & Antioxidants with Immunological Status and Host Genetic Factors, this subsystem captures the interplay between dietary protection and immune competence. Thirty-percent overlaps in membership functions model uncertainty in nutrient bioavailability and immune suppression, while rules prioritize high immunosuppression or poor nutrition as drivers of High risk, and strong antioxidant/immune profiles as protective. The output NutritionalImmuneRisk [0–10] thus reflects the net effect of host defenses on HPV clearance and lesion progression.

Hygiene Risk

The HygieneRiskFinal subsystem fuzzifies five intimate-hygiene behaviors, using "Low/Moderate/High" membership functions with 30 % overlap to model how dysbiosis and mucosal inflammation modulate HPV persistence. Three simple rules map hygiene levels directly to a 0–10 HygieneRiskLevel, ensuring smooth gradation between good and poor practices that influence cervical microenvironment health.

Socio-Structural Risk

This subsystem integrates SocioeconomicRisk, HealthAccessRisk and DemographicRisk into a single 0–10 SocioStructuralRisk score. Each input uses fuzzy sets "High/Moderate/Low" with overlaps to capture gradients in social disadvantage and health-system barriers. Rules then combine poor socioeconomic and access conditions with vulnerable age groups to flag populations at highest structural risk for delayed detection and treatment.

Third layer – Cervical Cancer Risk

The CervicalCancerRisk FIS synthesizes five intermediate risk scores into a single 0–10 risk index. Each input uses overlapping "Low–Medium–High" membership functions to capture uncertainty and continuous variation in clinically validated cofactors (viral, hormonal, nutritional, hygienic, and social). A concise rule set then elevates risk whenever any major domain is high, suppresses risk if any domain is low, and assigns medium risk for balanced profiles, ensuring smooth gradations without artificial cut-offs.

Table 23. Cervical Cancer Fuzzy Membership Functions

Input	Range	Low MF	Medium MF	High MF
InfectionSexualRisk	[0–10]	trapmf [0 0 2 4.5]	trimf [2.5 5 7.5]	trapmf [5.5 8 10 10]
HormonalMetabolicRisk	[0–10]	trapmf [0 0 2 4.5]	trimf [2.5 5 7.5]	trapmf [5.5 8 10 10]
NutritionalImmuneRisk	[0–10]	trapmf [0 0 2 4.5]	trimf [2.5 5 7.5]	trapmf [5.5 8 10 10]
HygieneRiskLevel	[0–10]	trapmf [0 0 2 4.5]	trimf [2.5 5 7.5]	trapmf [5.5 8 10 10]
SocioStructuralRisk	[0–10]	trapmf [0 0 2 4.5]	trimf [3 5 7]	trapmf [6 8 10 10]

Eleven rules were set defining the behavior of the response, they ar shown in the following table.

Table 24. Rules for Cervical Cancer System

Rule Description
If Infection and Sexual Risk is Low and Hormonal and Metabolic Risk is Low and Nutritional and Immune Risk is Low and Hygiene Risk is Low and Socio-Structural Risk is Low, then Cervical Cancer Risk is Low.
If Infection and Sexual Risk is High and Hormonal and Metabolic Risk is High and Nutritional and Immune Risk is High and Hygiene Risk is High and Socio-Structural Risk is High, then Cervical Cancer Risk is High.
If Infection and Sexual Risk is High, then Cervical Cancer Risk is High.

If Hormonal and Metabolic Risk is High, then Cervical Cancer Risk is High.
If Nutritional and Immune Risk is High, then Cervical Cancer Risk is High.
If Infection and Sexual Risk is Low, then Cervical Cancer Risk is Low.
If Hormonal and Metabolic Risk is Low, then Cervical Cancer Risk is Low.
If Nutritional and Immune Risk is Low, then Cervical Cancer Risk is Low.
If Hygiene Risk is High, then Cervical Cancer Risk is Medium.
If Socio-Structural Risk is High, then Cervical Cancer Risk is Medium.
If Infection and Sexual Risk is Medium and Hormonal and Metabolic Risk is Medium and Nutritional and Immune Risk is Medium and Hygiene Risk is Moderate and Socio-Structural Risk is Medium, then Cervical Cancer Risk is Medium.

Results

The following figures illustrate the 3D surface responses of the fuzzy inference system designed to assess Cervical Cancer Risk. Each surface plot provides a visual interpretation of how risk levels change based on combinations of medical, behavioral, and socio-structural conditions.

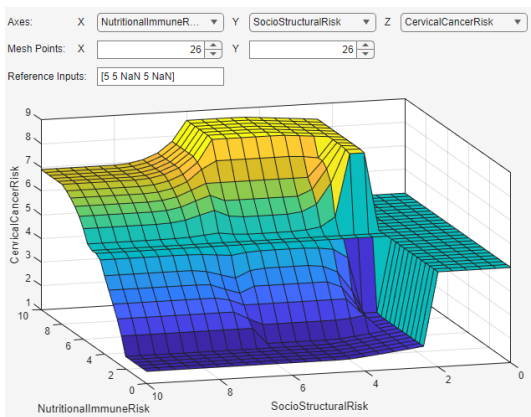

Figure 2. Control Surface of Nutritional Immune Risk and Socio Structural Risk

The previous shows the interaction between Nutritional and Immune Risk and Socio-Structural Risk. As expected, higher values in both dimensions lead to an increased cervical cancer risk. When both risks are low, the system predicts a low to moderate risk. The surface transitions are generally smooth, although there are localized sharp changes when the socio-structural risk rises abruptly, highlighting the system's sensitivity to socioeconomic vulnerabilities.

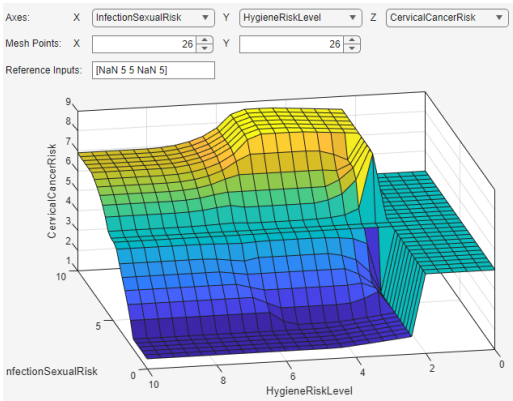

Figure 3. Control Surface for Infection Sexual RIsk and Hygiene Risk

Figure 3 presents the relationship between Infection and Sexual Risk and Hygiene Risk Level. High values in both factors are associated with a significant rise in cervical cancer risk. When both risks are low, the model predicts a low risk. The surface displays a logical, gradual gradient, reflecting how inadequate hygiene practices can amplify the impact of sexual behavior on cervical cancer development.

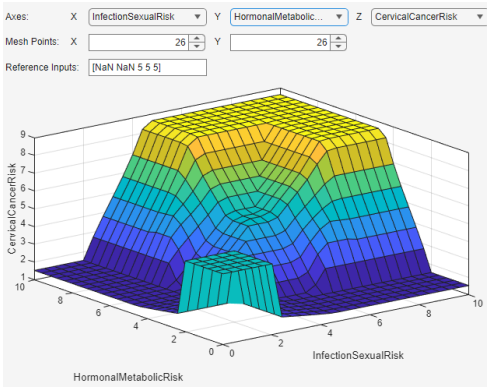

Figure 4. Control Surface for Hormnal-Metabolic Risk and Infection Sexual Risk

Figure 4 explores the interaction between Infection and Sexual Risk and Hormonal and Metabolic Risk. The highest risk zones occur when both factors are elevated. Notably, the central region of the plot is broader, suggesting that moderate levels of both risks lead to a moderate overall cancer risk. Some steep transitions appear in the lower corners, corresponding to individuals with minimal infection and hormonal-metabolic risk.

Figure 5 analyzes the combined effect of Infection and Sexual Risk and Socio-Structural Risk. A high socio-structural risk, even in combination with moderate infection risk, considerably raises the cervical cancer risk. This surface confirms that socio-economic disadvantages amplify the effects of other medical vulnerabilities. The

model maintains smooth transitions across most areas, adhering to the fuzzy system's design principles for gradual risk escalation.

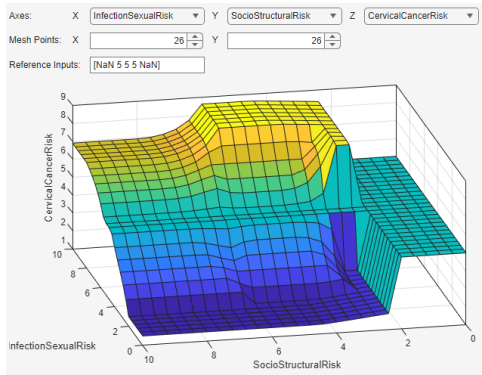

Figure 5. Control Surface for Infection Sexual Risk and Socio Structural Risk

The Figure 6 shows the complete Simulink architecture of the Cervical Cancer Risk fuzzy inference model.

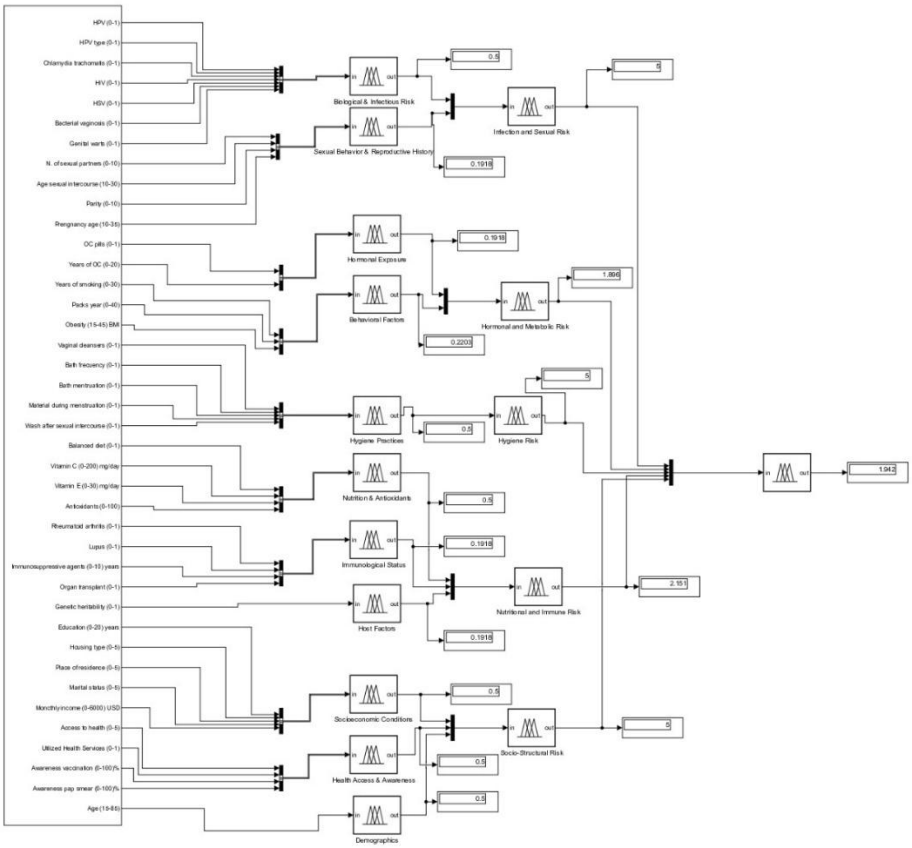

Figure 6. Cervical Cancer Fuzzy System in Simulink

To check the responses, three different cases were tested importing the subsystems to Simulink. The first case used input values corresponding to low risk, resulting in an

output of 1.902, which indicates a low risk of cervical cancer. The second scenario, based on medium-range values, yielded a final risk score of 5. The third simulation, which used the maximum values for all inputs, produced a risk score of 8.71, indicating a high level of risk.

Overall, the fuzzy inference system exhibited coherent and realistic behavior across all tested input combinations. It appropriately predicted increased cervical cancer risk in the presence of multiple high-risk conditions and maintained low-risk outputs when favorable conditions were present. Minor abrupt transitions observed in the results are consistent with the non-linear and synergistic nature of the modeled risk factors.

Bbliography

[1] "Basic Information about HPV and Cancer," CDC - cancer, 17 September 2024. [Online]. Available: https://www.cdc.gov/cancer/hpv/basic-information.html#:~:text=High%2Drisk%20and%20low%2Drisk%20HPV%20types&text=The%20types%20of%20HPV%20that,and%2060%25%20of%20penile%20cancers.. [Accessed April 2025].

[2] K. Abdelhalim, M. Abas, H. C. Mokhtar and B. Khaoula, "Prevalence of risk factors for cervical cancer induced by papillomavirus infection: A fuzzy inference system modeling," *Scholar Research Library,* vol. 8, no. 16, pp. 106-112, 2016.

[3] "Risk Factors for Cervical Cancer," American Cancer Society, 3 January 2020. [Online]. Available: https://www.cancer.org/cancer/types/cervical-cancer/causes-risks-prevention/risk-factors.html. [Accessed 2025].

[4] L. Mirabello and W. N. Chase, "Human papillomavirus genomics: Understanding carcinogenicity," *Tumour Virus Research,* vol. 15, June 2023.

[5] H. Zhu, Z. Shen, H. Luo, W. Zhan and X. Zhu, "Chlamydia Trachomatis Infection-Associated Risk of Cervical Cancer: A Meta-Analysis," *Medicine (Baltimore),* March 2016.

[6] D. Stelzle, L. F. Tanaka, K. K. Lee, A. I. Khalil, I. Baussano, A. S. V. S. D. A. McAllister, S. L. Gottlieb, S. J. Klug, A. S. Winkler, F. Bray, R. Baggaley, G. M. Clifford and Nath, "Estimates of the global burden of cervical cancer associated with HIV," *Lancet Glob Health,* vol. 9, no. 2, pp. 161-169, 2021.

[7] K. Raju, "VIRUS AND CERVICAL CANCER: ROLE AND IMPLICATION: A REVIEW," *Biomedical Research and Therapy,* vol. 2, no. 3, pp. 2020-230, 2015.

[8] E. Gillet, J. F. A. Meys, H. Verstraelen, R. Verhelst, P. D. Sutter, M. Temmerman and D. V. Broeck, "Association between Bacterial Vaginosis and Cervical Intraepithelial Neoplasia: Systematic Review and Meta-Analysis," *PLoS One,* vol. 7, no. 10, 2012.

[9] Z.-C. Liu, W.-D. Liu, Y.-H. Liu, X.-H. Ye and S.-D. Chen, "Multiple Sexual Partners as a Potential Independent Risk Factor for Cervical Cancer: a Meta-analysis of Epidemiological Studies," *Asian Pac J Cancer Prev,* vol. 16, no. 9, pp. 893-900, 2015.

[10] K. S. Louie, S. d. Sanjose, M. Diaz, X. Castellsagué, R. Herrero, C. J. Meijer, K. Shah, S. Franceschi, N. Muñoz and F. X. Bosch, "Early age at first sexual intercourse and early pregnancy are risk factors for cervical cancer in developing countries," *Br J Cancer,* vol. 100, no. 7, p. 1191–1197, 2009.

[11] Y. Tekalegn, B. Sahiledengle, D. Woldeyohannes, D. Atlaw, S. Degno, F. Desta, K. Bekele, T. Aseffa, H. Gezahegn and C. Kene, "High parity is associated with increased risk of cervical cancer: Systematic review and meta-analysis of case-control studies," *Womens Health (Lond),* 2022.

[12] "Oral Contraceptives and Cancer Risk," National Cancer Institute - NIH, 22 February 2018. [Online]. Available: https://www.cancer.gov/about-cancer/causes-prevention/risk/hormones/oral-contraceptives-fact-sheet?. [Accessed 24 April 2025].

[13] A. C. Bovo, P. G. Pedrão, Y. M. Guimarães, J. C. P. R. Luani Rezende Godoy 1, A. Longatto-Filho and R. d. Reis, "Combined Oral Contraceptive Use and the Risk of Cervical Cancer: Literature Review".

[14] A. C. Bovo, P. G. Pedrão, Y. M. Guimarães, L. R. Godoy, J. C. P. Resende, A. Longatto-Filho and R. d. Reis, "Combined Oral Contraceptive Use and the Risk of Cervical Cancer: Literature Review," *Rev Bras Ginecol Obstet,* vol. 45, no. 12, pp. 818-824, 2023.

[15] A. Urbute, K. Frederiksen, L. T. Thomsen, U. S. Kesmodel and S. K. Kjaer, "Overweight and obesity as risk factors for cervical cancer and detection of precancers among screened women: A nationwide, population-based cohort study," *Gynecol Oncol,* vol. 181, pp. 20-27, 2024.

[16] T. C. B. a, M. E. S. b, V. T.-T. P. c, L. T.-H. T. d, L. B. H. e, M. W. R. f. Damon J Vidrine a and C. M. Markham, "Intravaginal Practices and Genital Human Papillomavirus Infection among Female Sex Workers in Cambodia," *J Med Virol.,* vol. 90, no. 11, p. 1765–1774, 2019.

[17] D. Cao, K. Shen, Z. Li, Y. Xu and D. W. 1, "Association between vitamin C Intake and the risk of cervical neoplasia: A meta-analysis," *Nutr Cancer,* vol. 68, no. 1, pp. 48-57, 2016.

[18] M. Koshiyama, M. Nakagawa and A. Ono, "The Preventive Effect of Dietary Antioxidants against Cervical Cancer versus the Promotive Effect of Tobacco Smoking," *Healthcare (Basel),* vol. 7, no. 4, 2019.

[19] A.-B. Moscicki, L. Flowers, M. J. Huchko, M. E. Long, K. L. MacLaughlin, J. Murphy, L. B. Spiryda and M. A. Gold, "Guidelines for Cervical Cancer Screening in Immunosuppressed Women Without HIV Infection," *J Low Genit Tract Dis,* vol. 23, no. 2, pp. 87-101, 2019.

[20] B. N. Savani, P. Stratton, A. Shenoy, E. Kozanas, S. Goodman and A. J. Barrett, "Immunosuppression as a high-risk factor in the development of condyloma acuminatum and squamous neoplasia of the cervix," *Biol Blood Marrow Transplant,* vol. 14, no. 9, pp. 1072-1075, 2008.

[21] E. Billström, I. Sundström-Poromaa, K. Stålberg, A. Asplund and D. Hellberg, "Socioeconomic characteristics, housing conditions and criminal offences among women with cervical neoplasia," *Acta Obstet Gynecol Scand,* vol. 92, no. 8, pp. 88-94, 2013.

[22] H. Machida, S. E. Eckhardt, A. V. Castaneda, E. A. Blake, H. Q. Pham, L. D. Roman and K. Matsuo, "Single Marital Status and Infectious Mortality in Women With Cervical Cancer in the United States," *Int J Gynecol Cancer,* vol. 27, no. 8, p. 1737–1746, 2017.

[23] L. A. Walter, E. Leader and J. W. Galbraith, "Human Papillomavirus Awareness, Vaccine Status, and Risk Factors in Female Emergency Patients," *West J Emerg Med,* vol. 21, no. 2, pp. 203-208, 2020.