ODU-MT7621-01

DATA SHEET

PRODUCT INFO

PROCESSOR
MediaTek MT7621, 512MB DDR RAM, 32MB RAM

CELLULAR
4G/3G/2G with Dual SIM Active/Passive, Two Antennas , One IP66 External 5dBi main antenna and one 5dBI auxiliary internal Flexi Antenna

Wi-Fi
NA

INTERFACE
1x 10/100/1000 (External) with PoE IN, 1 x 10/100/1000 internal for configuration

POWER
Active PoE IN (IEEE 802.3af/at (48V-57V))

OPERATING SYSTEM
Open-WRT Linux

Hardware Specification

CPU	MediaTek MT7621
RAM	512MB
FLASH	32MB
Ethernet	1x 10/100/1000 (External) with PoE IN, 1 x 10/100/1000 internal for configuration
Cellular	1x Onboard Quectel EC200A LTE 4G module
SIM	2x Nano SIM with Tray (1x Active & 1x Passive)
Wi-Fi	NA
Reset	Pinhole Reset Button
Antenna	Cellular: 1x N Type Connector, 1x UFL connector
Status LED	1x Power, 2 X Ethernet, 1 X LTE Activity, 1 X RGB LED to indicate Signal Strength, 1 X Dual Color SIM Presence
Power Connector	PoE in
Input Voltage Range	IEEE 802.3 af/at(48V-57V)
Power Adapter	No
Enclosure	ABS/PC IP66 Housing
Mounting	WALL Mount, Poll Mount
Design	Fanless
Dimensions	140 x 75 x 224 mm (W x H x D)
Weight	950 gm

Operational & Environmental

Storage Temperature	-20 ~ 60 ˚C
Operating Temperature	-0 ~ 50 ˚C
Humidity	10 ~ 90% (non-condensing)

SOFTWARE SPECIFICATIONS

Cellular

Cellular Module	4G (LTE) - Cat 4 up to 150 Mbps, 3G - up to 42 Mbps, 2G - up to 236.8 Kbps
Status	Single strength (RSSI), SINR, RSRP, RSRQ
Band Management	Auto/User configurable
Operator Lock	Automatic/Mannual
APN	Configurable, Auto APN, Dual APN (Under Development)
Modem configuration mode	Single SIM, Dual SIM
SIM switching	Signal strength, ICMP echo, Data limit based
PDP Type	IPv4, IPv6, IPv4v6
SIM Authentication	PAP,CHAP, No Authentication
Passthrough	IP Passthrough (Under Development)
SMS	Send SMS, Read SMS, SMS Commands

Firewall & Networking

Routing	Static routing, Advanced Static Routing
Network Protocols	TCP, UDP, IPv4, IPv6, ICMP, NTP, HTTP, HTTPS, SCP, PPP, SSH, DHCP
Connection Monitoring	Ping Reboot, Scheduled Periodic Reboot
Firewall features	Port forward, traffic rules, SNAT, Zone forwarding, Parental Control, Masquerading, MSS Clamping, Loopback IP, Loopback Rules.
Attack Prevention	SYN Flood Protection, Drop Invalid Packets
DHCP	Static and Dynamic
Multi-WAN Configuration	Configurable Failover, load balancing between Cellular WAN, Wi-Fi WAN and Wired.
VLAN	Tagged VLAN, Untagged VLAN
VPN	Open VPN, IPsec, GRE, L2TP, PPTP, Wireguard, Zero Tier, IPIP Tunnel
Open VPN	TUN/TAP with TLS Certificates
IPsec	IKEv1, IKEv2, Aggressive/Main Mode
IPsec Encryption	3DES, AES128, AES192, AES256
IPsec Authentication	SHA1, MD5, SHA256, SHA384, SHA512
IPsec DH Group	MODP768, MODP1024, MODP1536, MODP2048, MODP3072, MODP4096
PPTP/L2TP	Server & Client with/without MPPE Encryption
Monitoring Application	Modem Monitoring with ICMP Echo, Router Monitoring with ICMP Echo
Time Synchronization	NTP Client, RTC, Manual
Diagnostic	Ping, Traceroute, Modem Debug Info, Iperf, Download Logs
Other Features	MAC binding, Connection Diagnostics, URL Filtering, Router Health Monitoring, Package Manager

Remote Management

NMS	Remote Monitoring & Management Platform for SILBO Networking products
NMS VPN	Remote Access of SILBO and non-SILBO Networking Devices
TR069	TR069 Client for CPE Management
SMS Commands	Reboot Command, Uptime Command

Operating System

Operating System	Open-WRT based Linux OS
Supported Languages	Shell scripting, C, C++
Development tools	SDK package with built environment provided (Optional)

Standard Packaging

ODU-MT7621-01 Outdoor Cellular Router with ABS/PC IP66 Housing , 1x External Antenna, 1 internal antenna, Mounting Kit.

*Star-marked features on the SILBO ODU-MT7621-Outdoor cellular router are accessible only after opening Top panel/ cover of the IP66 housing.

SPATIAL MEASUREMENT:

Top View

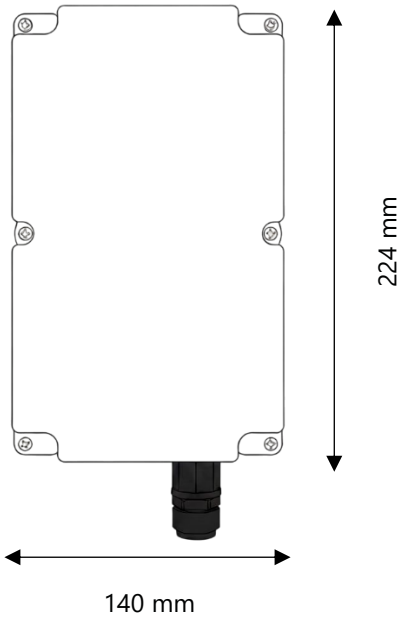

*All rights reserved, subject to change without prior notice.

Get in touch:

sales@invendis.com

www.silbonetworks.com

Invendis Technologies India Private Limited
No. 230, 1st Cross, 38th Main, BOOHBCS Layout, BTM
2nd Stage, Bangalore – 560 068