RFN44-A

DATA SHEET

PRODUCT INFO

PROCESSOR
MediaTek MT7628 128MB DDR RAM, 32MB Flash

CELLULAR
4G/3G/2G with Dual SIM, External 5 dBi antenna, (e-SIM optional)

Wi-Fi
2.4 GHz, 300 Mbps AP, Station, External 5 dBi antennas

INTERFACE
2x LAN 10/100 (Configurable)

POWER
9-30 Vdc DC IN

OPERATING SYSTEM
Open-WRT Linux

Hardware Specification

CPU	MediaTek MT7628
RAM	128MB
FLASH	32 MB
WAN	1x 10/100 Mbps
LAN	1x 10/100 Mbps
Serial Interface	NA
SIM	2x Nano SIM (Active, Passive)
Wi-Fi	802.11b/g/n
RTC	Built-in RTC
Reset	Pinhole Reset Button
Antenna	Cellular: 2x SMA Connector, Wi-Fi: 2x SMA connector
Status LED	1x Power, 2x Cellular, 1x Wi-Fi and 1x ACT, 2x Ethernet.
Power Connector	DC Jack
Input Voltage Range	9-30 Vdc DC IN
Power Adapter	Yes
Enclosure	Sheet Metal Enclosure
Mounting	DIN rail mounting Kit (Optional)
Design	Fanless
Dimensions	112 x 35 x 99 mm (W x H x D)
Weight	280 gm
Other	Grounding Screw

Operational & Environmental

Storage Temperature	-20 ~ 60 ˚C
Operating Temperature	0~ 50 ˚C
Humidity	10 ~ 90% (non-condensing)
Ingress Protection	IP30

SOFTWARE SPECIFICATIONS

Cellular

Cellular Module	4G (LTE) - Cat 4 up to 150 Mbps, 3G - up to 42 Mbps, 2G - up to 236.8 Kbps
Status	Single strength (RSSI), SINR, RSRP, RSRQ
Band Management	Auto/User configurable
Operator Lock	Automatic/Manual
APN	Configurable, Auto APN
Modem configuration mode	Single SIM, Dual SIM
SIM switching	Signal strength, ICMP echo, Data limit based
PDP Type	IPv4, IPv6, IPv4v6
SIM Authentication	PAP,CHAP, No Authentication
SMS	Send SMS, Read SMS, SMS Commands

Wi-Fi

Technology	802.11 b/g/n
Channel Selector	Auto/Configurable
Channel Width	20 MHz, 20/40 MHz
Wi-Fi Mode	Access Point (AP), Station, AP & Client, Guest Wi-Fi
TX Power	Configurable
Authentication	WPA (PSK), WPA2 (PSK), WPA3 (PSK), WPA & WPA2 Mixed Mode, WPA2 & WPA3 Mixed Mode
Encryption	TKIP, AES, TKIP & AES
Wi-Fi Scheduler	Scheduled ON/OFF
MAC ID Filtering	Whitelisting, Blacklisting
Other	WMM (Enabled/Disabled)

Firewall & Networking

Routing	Static routing, Advanced Static Routing
Network Protocols	TCP, UDP, IPv4, IPv6, ICMP, NTP, HTTP, HTTPS, SCP, PPP, SSH, DHCP
Connection Monitoring	Ping Reboot, Scheduled Periodic Reboot
Firewall features	Port forward, traffic rules, SNAT, Zone forwarding, Parental Control, Masquerading, MSS Clamping, Loopback IP, Loopback Rules.
Attack Prevention	SYN Flood Protection, Drop Invalid Packets
DHCP	Static and Dynamic
Multi-WAN Configuration	Configurable Failover, load balancing between Cellular WAN, Wired, and Wi-Fi WAN
VLAN	Tagged VLAN, Untagged VLAN
VPN	Open VPN, IPsec, GRE, L2TP, PPTP, Wireguard, Zero Tier, IPIP Tunnel
Open VPN	TUN/TAP with TLS Certificates
IPsec	IKEv1, IKEv2, Aggressive/Main Mode
IPsec Encryption	3DES, AES128, AES192, AES256
IPsec Authentication	SHA1, MD5, SHA256, SHA384, SHA512
IPsec DH Group	MODP768, MODP1024, MODP1536, MODP2048, MODP3072, MODP4096
PPTP/L2TP	Server & Client with/without MPPE Encryption
Monitoring Application	Modem Monitoring with ICMP Echo, Router Monitoring with ICMP Echo
Time Synchronization	NTP Client, Manual
Diagnostic	Ping, Traceroute, Modem Debug Info, Iperf, Download Logs
Other Features	MAC binding, Connection Diagnostics, URL Filtering, Router Health Monitoring, Package Manager

Remote Management

NMS	Remote Monitoring & Management Platform for SILBO Networking products
NMS VPN	Remote Access of SILBO and non-SILBO Networking Devices
TR069	TR069 Client for CPE Management
SMS Commands	Reboot Command, Uptime Command

Operating System

Operating System	Open-WRT-based Linux OS
Supported Languages	Shell scripting, C, C++
Development tools	SDK package with built environment provided (Optional)

Standard Packaging

RFN44-A Cellular Router with Sheet metal Enclosure, 2x Cellular rubber duck antennas, 2x Wi-Fi Rubber duck antennas, Power Adapter, 01-meter Ethernet cable.

SPATIAL MEASUREMENT:

Top View

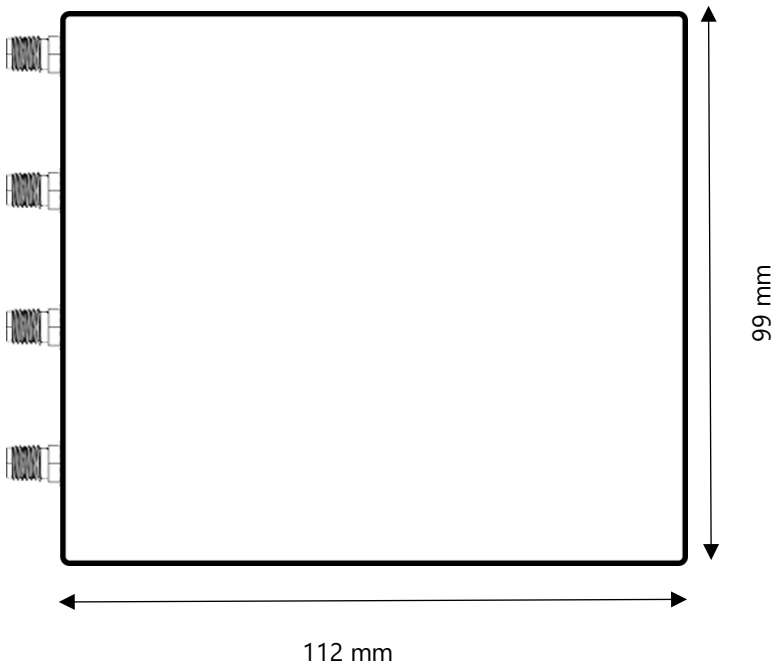

Front View

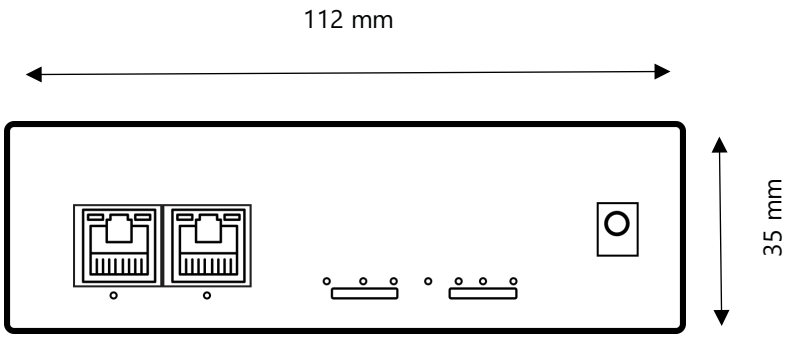

Side View

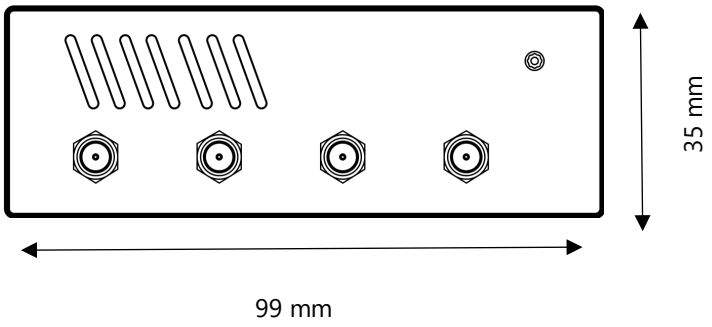

*All rights reserved, subject to change without prior notice.

Get in touch:

sales@invendis.com

www.silbonetworks.com

Invendis Technologies India Private Limited
No. 230, 1st Cross, 38th Main, BOOHBCS Layout, BTM
2nd Stage, Bangalore – 560 068