# RT05-2

## DATA SHEET

## PRODUCT INFO

### PROCESSOR
MediaTek MT7981,1GB DDR RAM, 128MB NAND

### CELLULAR
Dual Modem 5G/4G/3G with Dual SIM, External 5dBi antenna

### Wi-Fi
NA

### INTERFACE
4x LAN 10/100/1000, 1x WAN 10/100/1000

### POWER
9-30 DC IN

### OPERATING SYSTEM
Open-WRT Linux

## Hardware Specification

| | |
|---|---|
| CPU | MediaTek MT7981 |
| RAM | 1GB |
| FLASH | 128MB NAND |
| WAN | 1x 10/100/1000 |
| LAN | 4x 10/100/1000 |
| Serial Interface | NA |
| SIM | NA |
| Wi-Fi | 802.11 b/g/n/ac/ax |
| RTC | Built-in RTC |
| Reset | Pinhole Reset Button |
| Antenna | Wi-Fi: 5x SMA connector |
| Status LED | 1x Power, 1x Wi-Fi 5G, 1x Wi-Fi 2G, 5x Ethernet |
| Power Connector | DC Jack |
| Input Voltage Range | 9-30 Vdc |
| Power Adapter | YES |
| Enclosure | Industrial Aluminium Enclosure |
| Mounting | DIN rail mounting Kit (Optional) |
| Design | Fanless |
| Dimensions | 110 x 55 x 144 mm (W x H x D) |
| Weight | 480 gm |
| Other | Grounding Screw |

## Operational & Environmental

| | |
|---|---|
| Storage Temperature | -30 ~ 70 ˚C |
| Operating Temperature | 0~ 50 ˚C |
| Humidity | 10 ~ 90% (non-condensing) |

# SOFTWARE SPECIFICATION

## Wi-Fi

| | |
|---|---|
| Technology | 802.11 b/g/n/ac/ax |
| Channel Selector | Auto/Configurable |
| Channel Width | 20 MHz, 20/40/80/160 MHz |
| Wi-Fi Mode | Access Point (AP), Station, AP & Client, Guest Wi-Fi |
| TX Power | Configurable |
| Authentication | WPA (PSK), WPA2 (PSK), WPA3 (PSK), WPA & WPA2 Mixed Mode, WPA2 & WPA3 Mixed Mode |
| Encryption | TKIP, AES, TKIP & AES |
| Wi-Fi Scheduler | Scheduled ON/OFF |
| MAC ID Filtering | Whitelisting, Blacklisting |
| Other | WMM (Enabled/Disabled) |

## Firewall & Networking

| | |
|---|---|
| Routing | Static routing, Advanced Static Routing |
| Network Protocols | TCP, UDP, IPv4, IPv6, ICMP, NTP, HTTP, HTTPS, SCP, PPP, SSH, DHCP |
| Connection Monitoring | Ping Reboot, Scheduled Periodic Reboot, Hardware Watchdog (Enable / Disable) |
| Firewall features | Port forward, traffic rules, SNAT, Zone forwarding, Parental Control, Masquerading, MSS Clamping, Loopback IP, Loopback Rules. |
| Attack Prevention | SYN Flood Protection, Drop Invalid Packets |
| DHCP | Static and Dynamic |
| Multi-WAN Configuration | Configurable Failover, load balancing between Wi-Fi WAN and Wired. |
| VLAN | Tagged VLAN, Untagged VLAN |
| VPN | Open VPN, IPsec, GRE, L2TP, PPTP, Wireguard, Zero Tier, IPIP Tunnel |
| Open VPN | TUN/TAP with TLS Certificates |
| IPsec | IKEv1, IKEv2, Aggressive/Main Mode |
| IPsec Encryption | 3DES, AES128, AES192, AES256 |
| IPsec Authentication | SHA1, MD5, SHA256, SHA384, SHA512 |
| IPsec DH Group | MODP768, MODP1024, MODP1536, MODP2048, MODP3072, MODP4096 |
| PPTP/L2TP | Server & Client with/without MPPE Encryption |
| Monitoring Application | Modem Monitoring with ICMP Echo, Router Monitoring with ICMP Echo |
| Time Synchronization | NTP Client, RTC, Manual |
| Diagnostic | Ping, Traceroute, Modem Debug Info, Iperf, Download Logs |
| Other Features | MAC binding, Connection Diagnostics, URL Filtering, Router Health Monitoring, Package Manager |

## Remote Management

| | |
|---|---|
| NMS | Remote Monitoring & Management Platform for SILBO Networking products |
| NMS VPN | Remote Access of SILBO and non-SILBO Networking Device |
| TR069 | TR069 Client for CPE Management |
| SMS Commands | NA |

## Operating System

| | |
|---|---|
| Operating System | Open-WRT based Linux OS |
| Supported Languages | Shell scripting, C, C++ |
| Development tools | SDK package with built environment provided (Optional) |

## Standard Packaging

RT05-2 Cellular Router with Industrial Aluminium housing, 5x Wi-Fi Rubber Duck Antennas, Power Adapter, 01-meter Ethernet cable.

# SPATIAL MEASUREMENT:

Top View

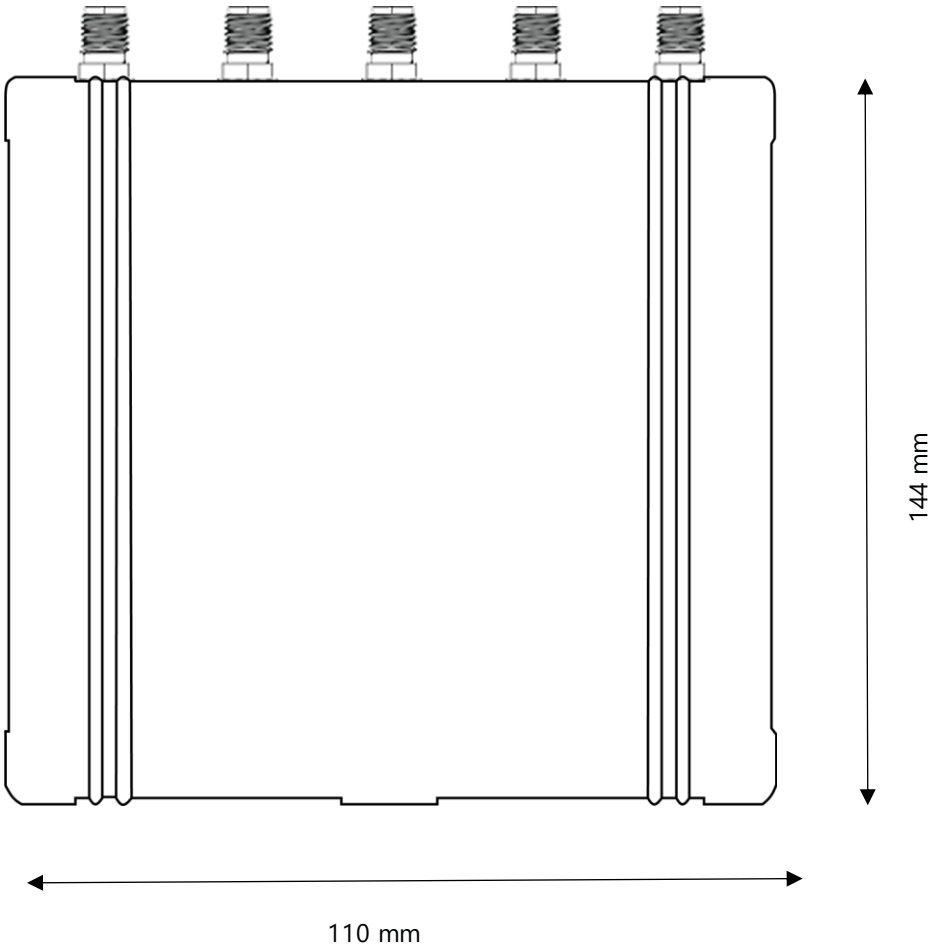

Front View

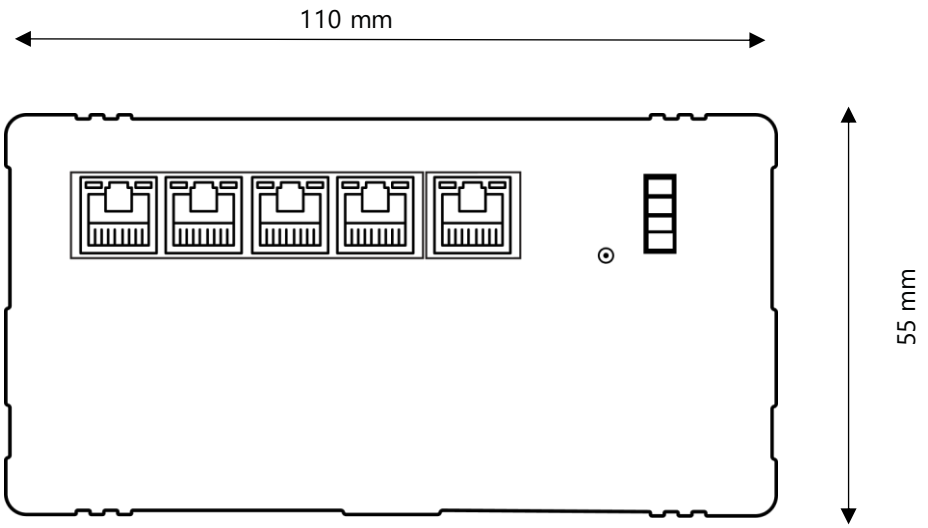


Rear View

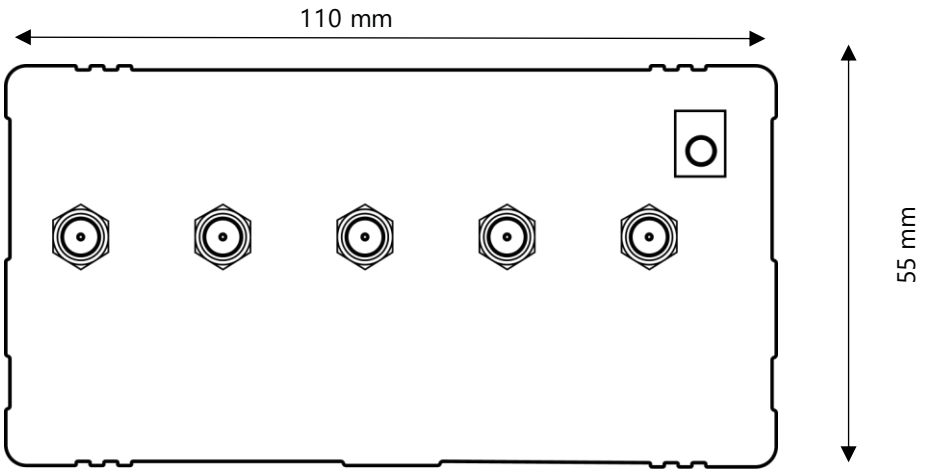


*All rights reserved, subject to change without prior notice.

Get in touch:

sales@invendis.com

www.silbonetworks.com

Invendis Technologies India Private Limited
No. 230, 1st Cross, 38th Main, BOOHBCS Layout, BTM
2nd Stage, Bangalore – 560 068