IA44-A

DATA SHEET

PRODUCT INFO

PROCESSOR
MediaTek MT7628, 128/256MB DDR2 RAM, 32MB Flash

CELLULAR
4G/3G/2G with Dual SIM, External 5DBi antennas

Wi-Fi
2.4GHz, 300Mbps AP, Station, External 5dBi antennas

INTERFACE
2x LAN/WAN 10/100

POWER
9-30V DC IN

OPERATING SYSTEM
Open-WRT Linux

Hardware Specification

CPU	MediaTek MT7628, 580 MHz CPU
RAM	128MB
FLASH	32MB
WAN	1x 10/100 Mbps
LAN	1x 10/100 Mbps
Serial Interface	NA
SIM	2x Nano SIM (1x Active & 1x Passive)
Wi-Fi	802.11b/g/n
RTC	Built-in RTC
Reset	Pinhole Reset Button
Antenna	Cellular: 2x SMA Connector, Wi-Fi: 2x SMA connector
Status LED	1x Power, 2x Cellular, 1x Wi-Fi, 1x ACT, 2x Ethernet,Signal Strength,
Power Connector	Molex 4pin Snug fit connecter
Input Voltage Range	9-30 Vdc
Power Adapter	N/A
Enclosure	Industrial Aluminium Enclosure
Mounting	DIN rail mounting Kit (Optional)
Design	Fanless
Dimensions	110 x 44 x 94 mm (W x H x D)
Weight	280 gm
Other	Grounding Screw

Operational & Environmental

Storage Temperature	-30 ~ 70 ˚C
Operating Temperature	-20 ~ 60 ˚C
Humidity	10 ~ 90% (non-condensing)
Ingress Protection	IP30

SOFTWARE SPECIFICATIONS

Cellular

Cellular Module	4G (LTE) - Cat 4 up to 150 Mbps, 3G - up to 42 Mbps, 2G - up to 236.8 Kbps
Status	Single strength (RSSI), SINR, RSRP, RSRQ
Band Management	Auto/User configurable
Operator Lock	Automatic/Mannual
APN	Configurable, Auto APN
Modem configuration mode	Single SIM, Dual SIM
SIM switching	Signal strength, ICMP echo, Data limit based
PDP Type	IPv4, IPv6, IPv4v6
SIM Authentication	PAP,CHAP, No Authentication
SMS	Send SMS, Read SMS, SMS Commands

Wi-Fi

Technology	802.11 b/g/n
Channel Selector	Auto/Configurable
Channel Width	20 MHz, 20/40 MHz
Wi-Fi Mode	Access Point (AP), Station, AP & Client, Guest Wi-Fi
TX Power	Configurable
Authentication	WPA (PSK), WPA2 (PSK), WPA3 (PSK), WPA & WPA2 Mixed Mode, WPA2 & WPA3 Mixed Mode
Encryption	TKIP, AES, TKIP & AES
Wi-Fi Scheduler	Scheduled ON/OFF
MAC ID Filtering	Whitelisting, Blacklisting
Other	WMM (Enabled/Disabled)

Firewall & Networking

Routing	Static routing
Network Protocols	TCP, UDP, IPv4, IPv6, ICMP, NTP, HTTP, HTTPS, SCP, PPP, SSH, DHCP
Connection Monitoring	Ping Reboot, Scheduled Periodic Reboot
Firewall features	Port forward, traffic rules, SNAT, Zone forwarding, Parental Control, Masquerading, MSS Clamping, Loopback IP, Loopback Rules.
Attack Prevention	SYN Flood Protection, Drop Invalid Packets
DHCP	Static and Dynamic
Multi-WAN Configuration	Configurable Failover, load balancing between Cellular WAN, Wi-Fi WAN and Wired.
VLAN	Tagged VLAN, Untagged VLAN
VPN	Open VPN, IPsec, GRE, L2TP, PPTP, Wireguard, Zero Tier, IPIP Tunnel
Open VPN	TUN/TAP with TLS Certificates
IPsec	IKEv1, IKEv2, Aggressive/Main Mode
IPsec Encryption	3DES, AES128, AES192, AES256
IPsec Authentication	SHA1, MD5, SHA256, SHA384, SHA512
IPsec DH Group	MODP768, MODP1024, MODP1536, MODP2048, MODP3072, MODP4096
PPTP/L2TP	Server & Client with/without MPPE Encryption
Monitoring Application	Modem Monitoring with ICMP Echo, Router Monitoring with ICMP Echo
Time Synchronization	NTP Client, RTC, Manual
Diagnostic	Ping, Traceroute, Modem Debug Info, Iperf, Download Logs
Other Features	MAC binding, Connection Diagnostics, URL Filtering, Router Health Monitoring, Package Manager

Remote Management

NMS	Remote Monitoring & Management Platform for SILBO Networking products
NMS VPN	Remote Access of SILBO and non-SILBO Networking Devices
TR069	TR069 Client for CPE Management
SMS Commands	Reboot Command, Uptime Command

Regulatory and Approvals

Regulatory	CE
Emission	CISPR 32 Class A (EN55032)
Immunity	
• ESD	IEC 61000-4-2:2008
• EFT	IEC 61000-4-4:2012
• Surge	IEC 61000-4-5:2014
• Radiated Immunity	IEC 61000-4-3
• Conducted Immunity	IEC 61000-4-6

Operating System

Operating System	Open-WRT based Linux OS
Supported Languages	Shell scripting, C, C++
Development tools	SDK package with built environment provided (Optional)

Standard Packaging

IA44-A Cellular Router with Industrial Aluminium Housing , 2x Cellular Rubber Duck Antennas, 2x Wi-Fi Rubber Duck Antennas, 0.5-meter Power Cord, 01-meter Ethernet cable.

SPATIAL MEASUREMENT:

Top View

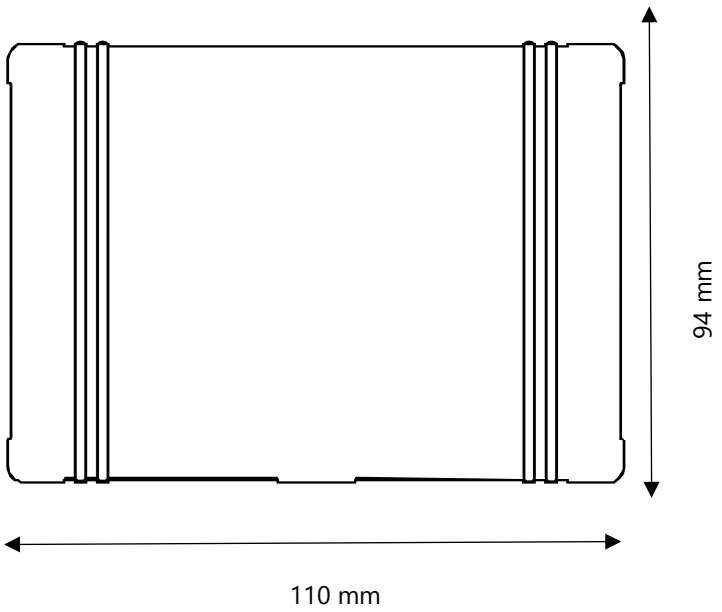

Front View

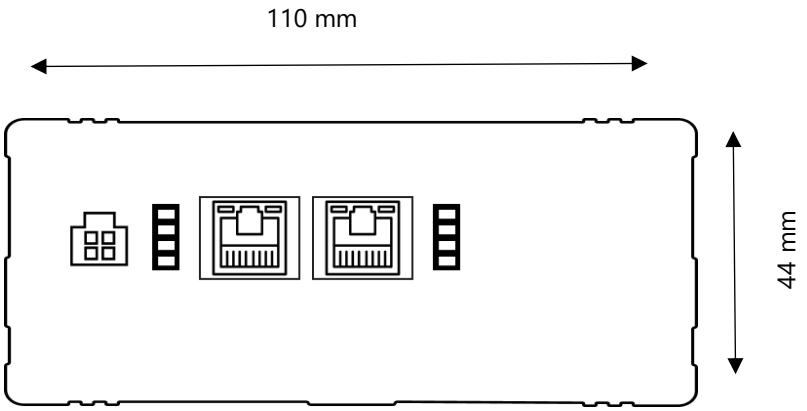

Rear View

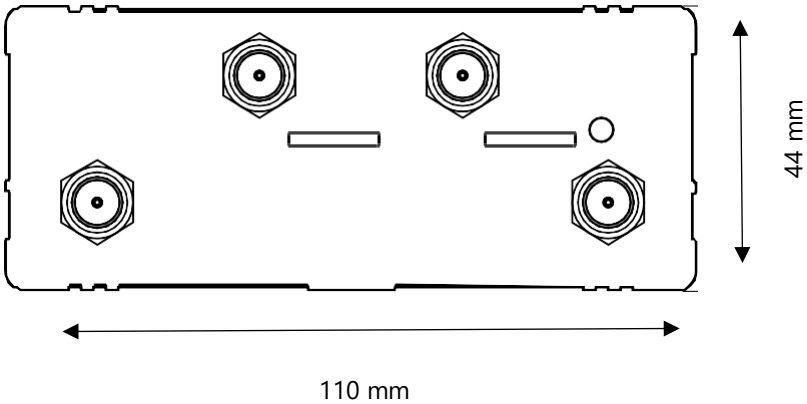

*All rights reserved, subject to change without prior notice.

Get in touch:

sales@invendis.com

www.silbonetworks.com

Invendis Technologies India Private Limited
No. 230, 1st Cross, 38th Main, BOOHBCS Layout, BTM
2nd Stage, Bangalore – 560 068