IAF44-C1

DATA SHEET

PRODUCT INFO

PROCESSOR
MediaTek MT7628, 128/256MB DDR2 RAM, 32MB Flash

CELLULAR
4G/3G/2G with Dual SIM, External 5DBi antennas

Wi-Fi
2.4GHz, 300Mbps AP, Station, External 5dBi antennas

INTERFACE
2x WAN/LAN 10/100, 2x AI

POWER
9-30V DC IN

OPERATING SYSTEM
Open-WRT Linux

Hardware Specification

CPU	MediaTek MT7628, 580 MHz CPU
RAM	128MB
FLASH	32MB
WAN	1x 10/100 Mbps
LAN	1x 10/100 Mbps
Serial Interface	2x AI, 1x ISO 24v OUT, 1x RS485
SIM	2x Nano SIM (1x Active & 1x Passive)
Wi-Fi	NA
RTC	Built-in RTC
Reset	Pinhole Reset Button
Antenna	Cellular: 2x SMA Connector
Status LED	1x Power, 1x Wi-Fi, 1x ACT, 2x Ethernet, Signal Strength, 2x Cellular, 1x RS485 Rx/Tx, 2x Prg
Power Connector	Molex 4pin Snug fit connecter
Input Voltage Range	9-30 Vdc
Power Adapter	N/A
Enclosure	Industrial Aluminium Enclosure
Mounting	DIN rail mounting Kit (Optional)
Design	Fanless
Dimensions	110 x 44 x 94 mm (W x H x D)
Weight	400 gm
Other	Grounding Screw

Operational & Environmental

Storage Temperature	-30 ~ 70 ˚C
Operating Temperature	-20 ~ 60 ˚C
Humidity	10 ~ 90% (non-condensing)

SOFTWARE SPECIFICATIONS

Cellular

Cellular Module	4G (LTE) - Cat 4 up to 150 Mbps, 3G - up to 42 Mbps, 2G - up to 236.8 Kbps
Status	Single strength (RSSI), SINR, RSRP, RSRQ
Band Management	Auto/User configurable
Operator Lock	Automatic/Manual
APN	Configurable, Auto APN
Modem configuration mode	Single SIM, Dual SIM
SIM switching	Signal strength, ICMP echo, Data limit based
PDP Type	IPv4, IPv6, IPv4v6
SIM Authentication	PAP,CHAP, No Authentication
SMS	Send SMS, Read SMS, SMS Commands

Firewall & Networking

Routing	Static routing, Advanced Static Routing
Network Protocols	TCP, UDP, IPv4, IPv6, ICMP, NTP, HTTP, HTTPS, SCP, PPP, SSH, DHCP
Connection Monitoring	Ping Reboot, Scheduled Periodic Reboot
Firewall features	Port forward, traffic rules, SNAT, Zone forwarding, Parental Control, Masquerading, MSS Clamping, Loopback IP, Loopback Rules.
Attack Prevention	SYN Flood Protection, Drop Invalid Packets
DHCP	Static and Dynamic
Multi-WAN Configuration	Configurable Failover, load balancing between Cellular WAN, and Wired.
VLAN	Tagged VLAN, Untagged VLAN
VPN	Open VPN, IPsec, GRE, L2TP, PPTP, Wireguard, Zero Tier, IPIP Tunnel
Open VPN	TUN/TAP with TLS Certificates
IPsec	IKEv1, IKEv2, Aggressive/Main Mode
IPsec Encryption	3DES, AES128, AES192, AES256
IPsec Authentication	SHA1, MD5, SHA256, SHA384, SHA512
IPsec DH Group	MODP768, MODP1024, MODP1536, MODP2048, MODP3072, MODP4096
PPTP/L2TP	Server & Client with/without MPPE Encryption
Monitoring Application	Modem Monitoring with ICMP Echo, Router Monitoring with ICMP Echo
Time Synchronization	NTP Client, RTC, Manual
Diagnostic	Ping, Traceroute, Modem Debug Info, Iperf, Download Logs
Other Features	MAC binding, Connection Diagnostics, URL Filtering, Router Health Monitoring, Package Manager

Remote Management

NMS	Remote Monitoring & Management Platform for SILBO Networking products
NMS VPN	Remote Access of SILBO and non-SILBO Networking Devices
TR069	TR069 Client for CPE Management
SMS Commands	Reboot Command, Uptime Command

Gateway

Gateway Protocols	Modbus TCP Slave, Modbus TCP Master, Modbus RTU
Serial Mode	Transparent (Over IP), Modbus Gateway
Data sender	HTTP, MQTT, Azure MQTT
Internal Storage	NA

Operating System

Operating System	Open-WRT based Linux OS
Supported Languages	Shell scripting, C, C++
Development tools	SDK package with built environment provided (Optional)

Standard Packaging

IAF44-C1 Cellular Gateway with Industrial Aluminium Housing , 2x Cellular Rubber Duck Antennas, 0.5-meter Power Cord, 1x AI, 01-meter Ethernet cable.

SPATIAL MEASUREMENT:

Top View

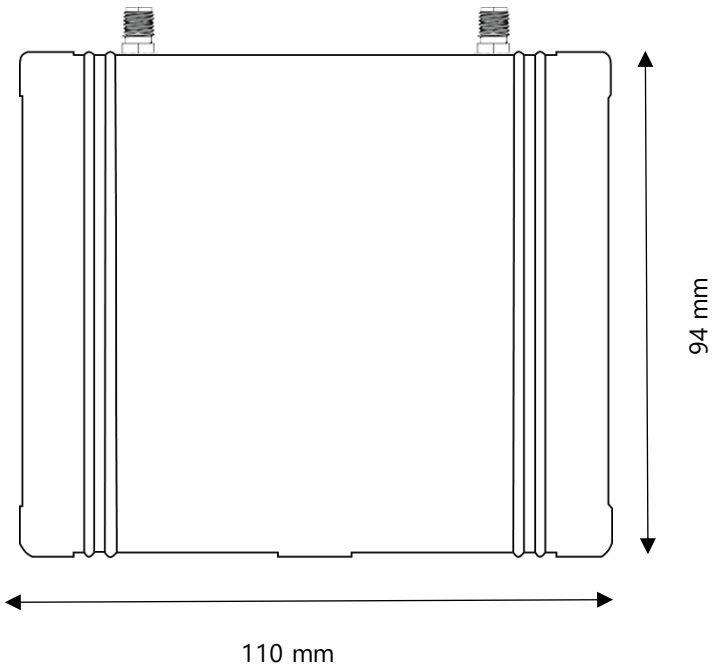

Front View

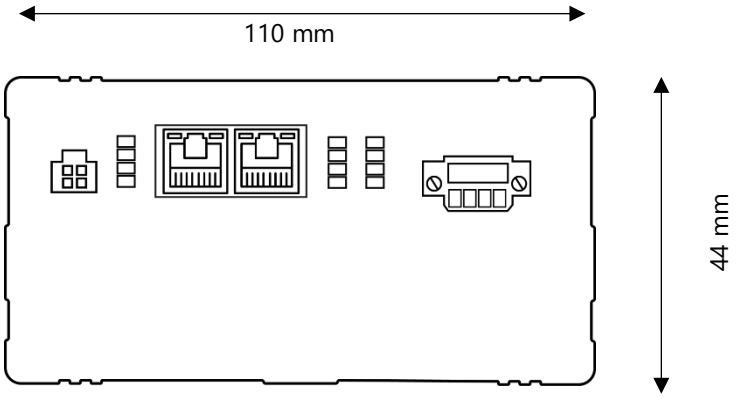

Rear View

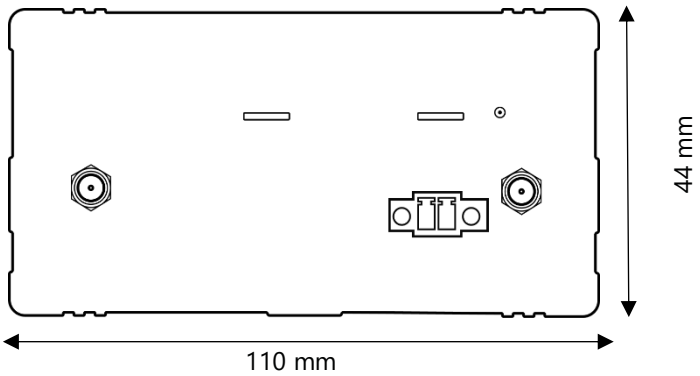

*All rights reserved, subject to change without prior notice.

Get in touch:

sales@invendis.com

www.silbonetworks.com

Invendis Technologies India Private Limited
No. 230, 1st Cross, 38th Main, BOOHBCS Layout, BTM
2nd Stage, Bangalore – 560 068