RT00

DATA SHEET

PRODUCT INFO

PROCESSOR
MediaTek MT7981,1GB DDR RAM, 128MB NAND

CELLULAR
NA

Wi-Fi
NA

INTERFACE
4x LAN 10/100/1000, 1x WAN 10/100/1000

POWER
9-30 DC IN

OPERATING SYSTEM
Open-WRT Linux

Hardware Specification

CPU	MediaTek MT7981
RAM	1GB
FLASH	128MB NAND
WAN	1x 10/100/1000
LAN	4x 10/100/1000
Serial Interface	NA
SIM	NA
Wi-Fi	802.11 b/g/n/ac/ax
RTC	Built-in RTC
Reset	Pinhole Reset Button
Antenna	Wi-Fi: 5x SMA connector
Status LED	1x Power, 1x Wi-Fi 5G, 1x Wi-Fi 2G, 5x Ethernet
Power Connector	DC Jack
Input Voltage Range	9-30 Vdc
Power Adapter	YES
Enclosure	Industrial Aluminium Enclosure
Mounting	DIN rail mounting Kit (Optional)
Design	Fanless
Dimensions	110 x 55 x 144 mm (W x H x D)
Weight	480 gm
Other	Grounding Screw

Operational & Environmental

Storage Temperature	-30 ~ 70 ˚C
Operating Temperature	0~ 50 ˚C
Humidity	10 ~ 90% (non-condensing)

SOFTWARE SPECIFICATION

Wi-Fi

Technology	802.11 b/g/n/ac/ax
Channel Selector	Auto/Configurable
Channel Width	20 MHz, 20/40/80/160 MHz
Wi-Fi Mode	Access Point (AP), Station, AP & Client, Guest Wi-Fi
TX Power	Configurable
Authentication	WPA (PSK), WPA2 (PSK), WPA3 (PSK), WPA & WPA2 Mixed Mode, WPA2 & WPA3 Mixed Mode
Encryption	TKIP, AES, TKIP & AES
Wi-Fi Scheduler	Scheduled ON/OFF
MAC ID Filtering	Whitelisting, Blacklisting
Other	WMM (Enabled/Disabled)

Firewall & Networking

Routing	Static routing, Advanced Static Routing
Network Protocols	TCP, UDP, IPv4, IPv6, ICMP, NTP, HTTP, HTTPS, SCP, PPP, SSH, DHCP
Connection Monitoring	Ping Reboot, Scheduled Periodic Reboot, Hardware Watchdog (Enable / Disable)
Firewall features	Port forward, traffic rules, SNAT, Zone forwarding, Parental Control, Masquerading, MSS Clamping, Loopback IP, Loopback Rules.
Attack Prevention	SYN Flood Protection, Drop Invalid Packets
DHCP	Static and Dynamic
Multi-WAN Configuration	Configurable Failover, load balancing between Wi-Fi WAN and Wired.
VLAN	Tagged VLAN, Untagged VLAN
VPN	Open VPN, IPsec, GRE, L2TP, PPTP, Wireguard, Zero Tier, IPIP Tunnel
Open VPN	TUN/TAP with TLS Certificates
IPsec	IKEv1, IKEv2, Aggressive/Main Mode
IPsec Encryption	3DES, AES128, AES192, AES256
IPsec Authentication	SHA1, MD5, SHA256, SHA384, SHA512
IPsec DH Group	MODP768, MODP1024, MODP1536, MODP2048, MODP3072, MODP4096
PPTP/L2TP	Server & Client with/without MPPE Encryption
Monitoring Application	Modem Monitoring with ICMP Echo, Router Monitoring with ICMP Echo
Time Synchronization	NTP Client, RTC, Manual
Diagnostic	Ping, Traceroute, Modem Debug Info, Iperf, Download Logs
Other Features	MAC binding, Connection Diagnostics, URL Filtering, Router Health Monitoring, Package Manager

Remote Management

NMS	Remote Monitoring & Management Platform for SILBO Networking products
NMS VPN	Remote Access of SILBO and non-SILBO Networking Device
TR069	TR069 Client for CPE Management
SMS Commands	NA

Operating System

Operating System	Open-WRT based Linux OS
Supported Languages	Shell scripting, C, C++
Development tools	SDK package with built environment provided (Optional)

Standard Packaging

RT00 Cellular Router with Industrial Aluminium housing, 5x Wi-Fi Rubber Duck Antennas, Power Adapter, 01-meter Ethernet cable.

SPATIAL MEASUREMENT:

Top View

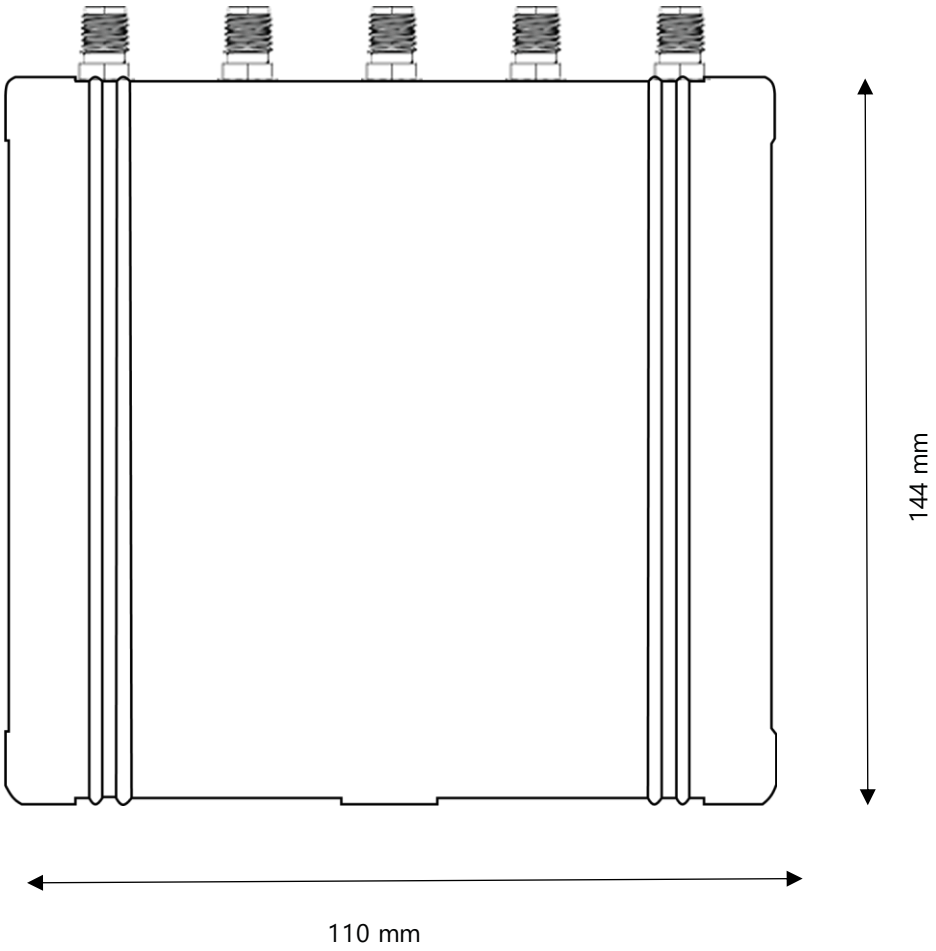

Front View

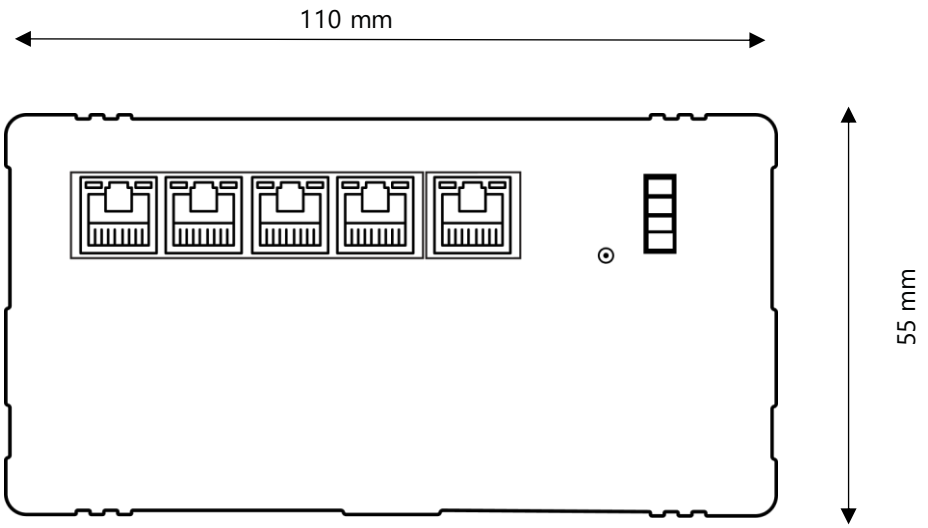

Rear View

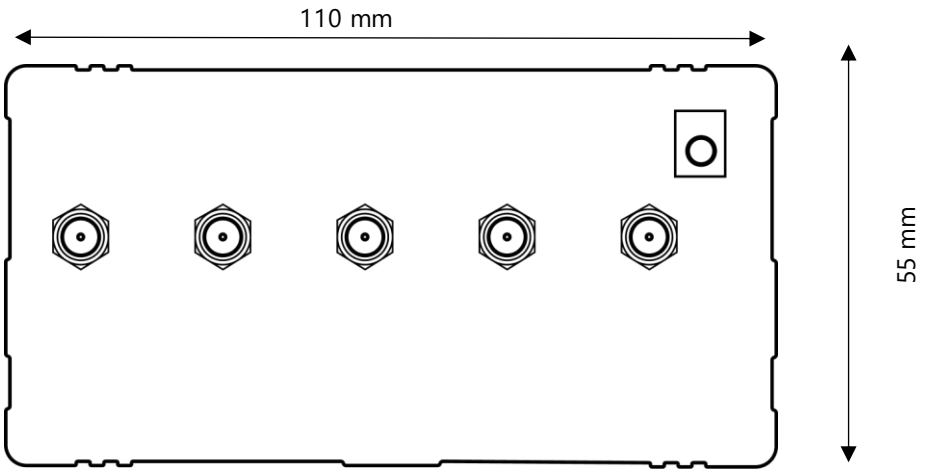

*All rights reserved, subject to change without prior notice.

Get in touch:

sales@invendis.com

www.silbonetworks.com

Invendis Technologies India Private Limited
No. 230, 1st Cross, 38th Main, BOOHBCS Layout, BTM
2nd Stage, Bangalore – 560 068