MPCA Project

TITLE OF THE PROJECT: LIFI Data Transfer System

Team Members:

Sl. No	Name	SRN
1	Ahana Sharan	PES1UG24AM020
2	Anarghyaa Kashyap	PES1UG24AM039

Components used:

- LDR Sensor
- Temperature and Humidity Sensor
- LCD
- Potentiometer

Explanation about the project :

The system makes use of an LDR sensor and Temperature and Humidity Sensor. It allows us to use LIFI medium for data transfer. We make use of a Lifi transmitter app to convert a written text message into light flash data for transmission. On sending the message, the app controls the mobile phone flashlight to transmit the message. The phone encodes the message into a series of flashes and transmits this data using the mobile torch light. This light message as it falls on the LDR receiver, is decoded and sent to the microcontroller for processing. The Arduino decodes and processes the message sent and then displays it over an LCD display to complete the data transmission. The LCD also displays the temperature and humidity of the surroundings.

Circuit Diagram:

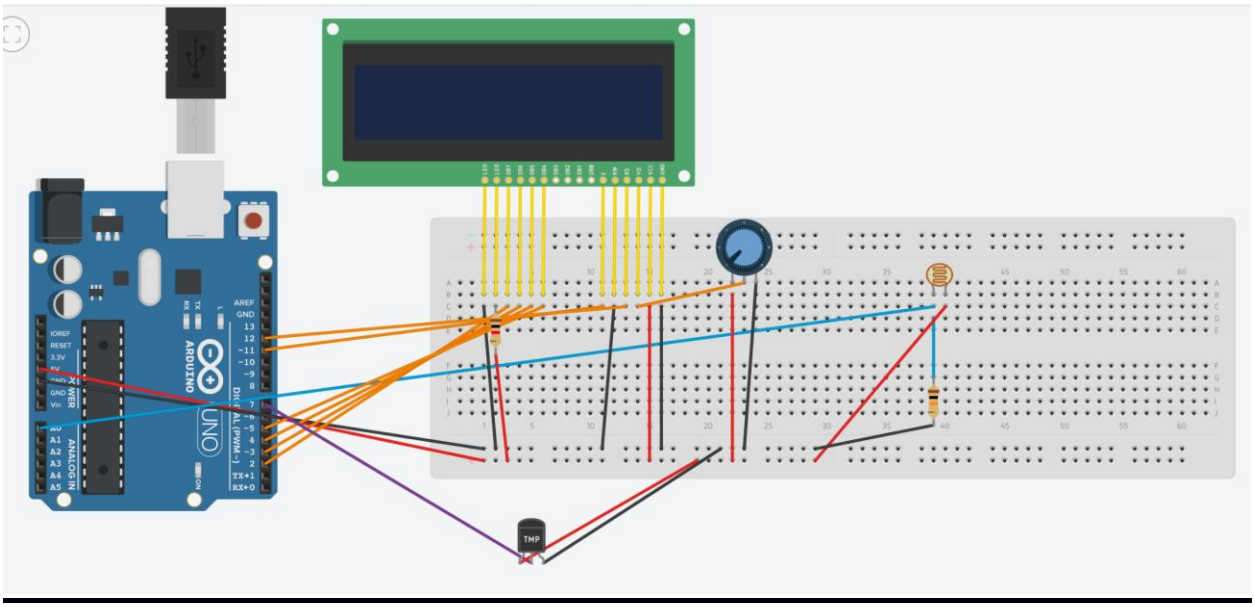

Pseudocode:

```
BEGIN

  INITIALISE LCD (16x2), DHT11 sensor, LDR on analog pin A0
  SET light_threshold = 900
  DISPLAY "LiFi Morse Ready" on LCD
  WAIT 2 seconds
  CLEAR LCD
  DISPLAY "Waiting..." on LCD

  LOOP continuously:

    // --- Environmental Sensing ---
    IF 5 seconds have elapsed THEN
      READ temperature from DHT11
      READ humidity from DHT11
      DISPLAY "T:__C H:_%" on LCD row 2
    END IF
```

```
// --- LDR Light Detection ---
READ analog value from LDR pin A0
IF analog value > 900 THEN
  SET light_detected = TRUE
ELSE
  SET light_detected = FALSE
END IF

// --- Morse Signal Decoding ---
IF light state has changed THEN

  MEASURE duration of previous state

  IF previous state was LIGHT ON THEN
    IF duration > 600ms THEN
      APPEND "-" (DASH) to current Morse buffer
    ELSE
      APPEND "." (DOT) to current Morse buffer
    END IF
  END IF

  IF previous state was LIGHT OFF THEN
    IF duration > 3000ms THEN
      DECODE Morse buffer to character
      APPEND character to message
      DISPLAY complete message on LCD row 1
      RESET for next message
    ELSE IF duration > 2300ms THEN
      DECODE Morse buffer to character
      APPEND character to message
      APPEND SPACE to message (word boundary)
      CLEAR Morse buffer
    ELSE IF duration > 1000ms THEN
      DECODE Morse buffer to character
      APPEND character to message
      DISPLAY message on LCD row 1
      CLEAR Morse buffer
    END IF
  END IF
```

```
    END IF
  END LOOP
END
```

Output Pictures with explanations:

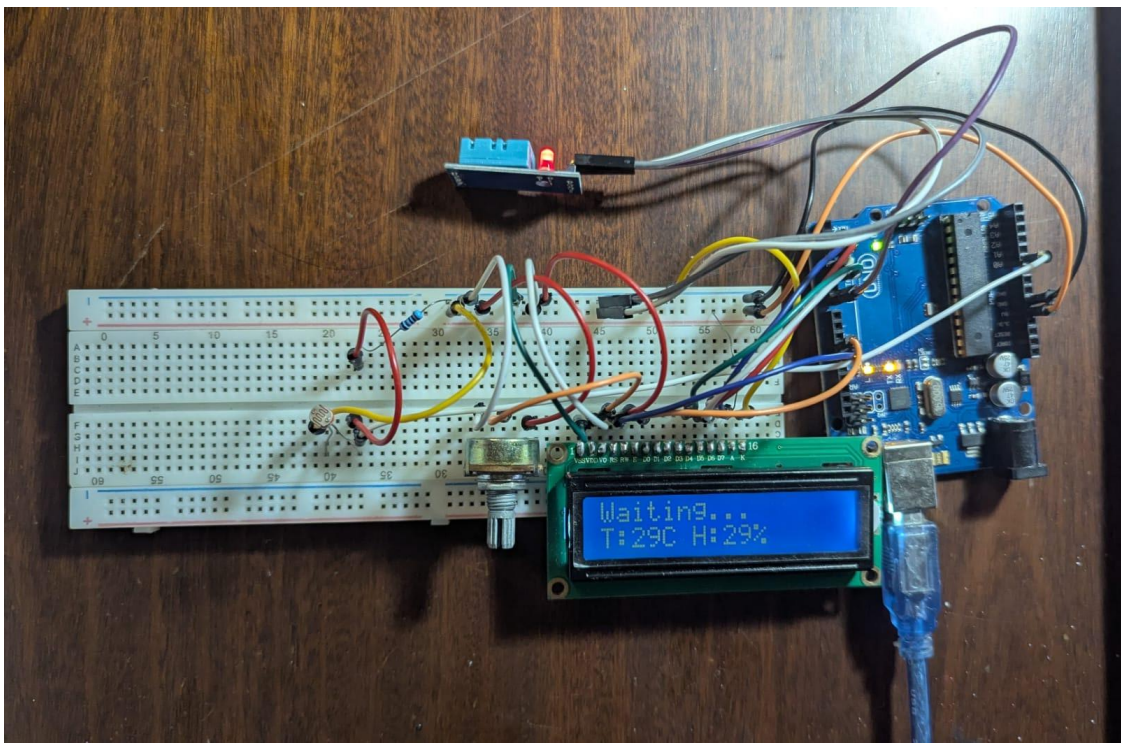

The LCD displays "Waiting..." on the first row, indicating that the system has been successfully initialised and is ready to receive a LiFi transmission. The second row displays the live readings from the DHT11 sensor showing a temperature of 29 degrees Celsius and humidity of 27%, confirming that environmental monitoring is functioning correctly even when no message is being transmitted.

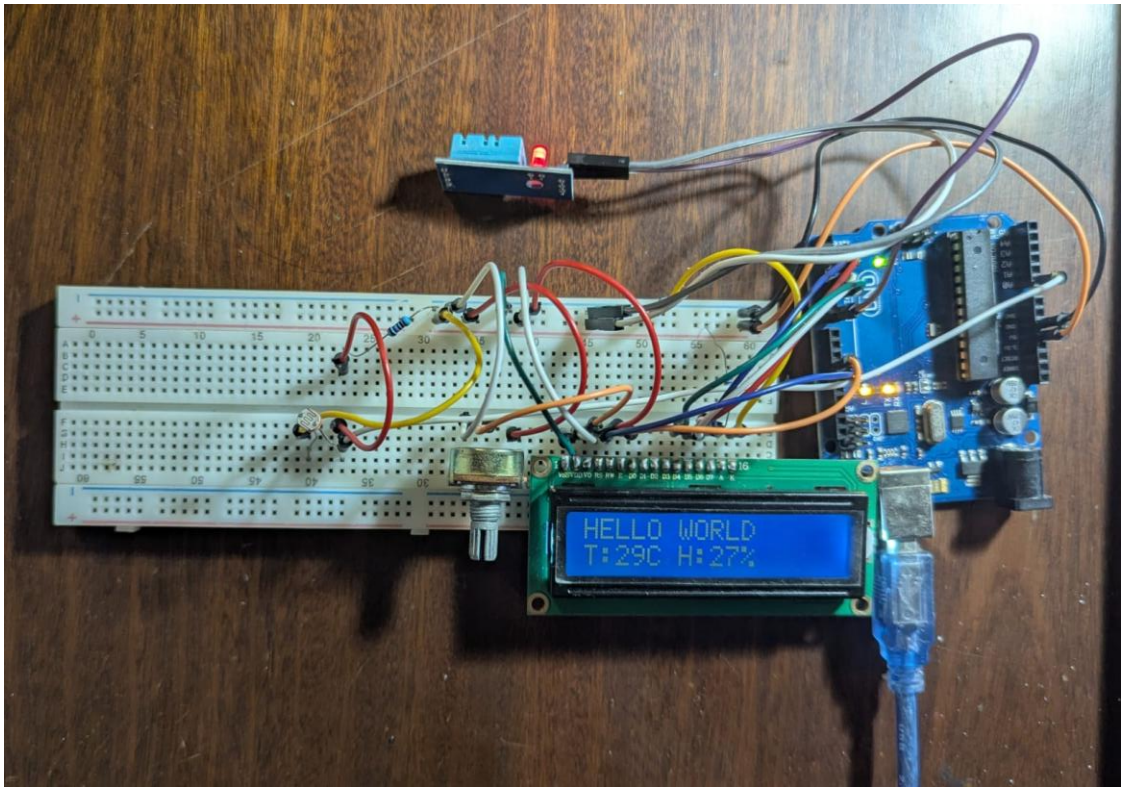

The LCD displays "HELLO WORLD" on the first row, demonstrating successful end-to-end LiFi data transmission. The message was typed in the LiFi Transmitter mobile app, which encoded it as Morse code and transmitted it by flashing the phone torch. The LDR sensor detected the light pulses and sent the analog signal to the Arduino. The Arduino measured the duration of each pulse to classify dots and dashes, looked up each Morse sequence in a character table, and assembled the full message which was then displayed on the LCD. The second row continues to show T:29C and H:27% from the DHT11 sensor, confirming that LiFi decoding and environmental sensing both operate simultaneously without any interference.