Jablaoui *et al. J Wireless Com Network* (2025) 2025:66
https://doi.org/10.1186/s13638-025-02477-6

EURASIP Journal on Wireless Communications and Networking

RESEARCH Open Access

Deep learning enabled intrusion detection system for IoT security

Rahma Jablaoui[1*], Omar Cheikhrouhou[2], Monia Hamdi[3] and Noureddine Liouane[1]

*Correspondence: rahma.jablaoui@fsm.rnu.tn

[1] Laboratory of Automatic, Signal, and Image Processing, University of Monastir, 5001 Monastir, Tunisia
[2] National School of Electronic and Telecommunications of Sfax, University of Sfax, Sfax, Tunisia
[3] Department of Information Technology, College of Computer and Information Sciences, Princess Nourah bint Abdulrahman University, P.O.Box 84428, 11671 Riyadh, Saudi Arabia

Abstract

With the swift progress of technology and the increasing frequency of cyber attacks on organizational networks and systems, cybersecurity has become one of the most critical challenges in the modern digital world. Within this framework, Intrusion Detection Systems (IDS) are critical to mitigate the impact of cybercrimes and safeguarding systems from various malicious attacks. However, traditional machine learning (ML) approaches have ceased to be sufficient to handle the complexities of large-scale and unstructured data, particularly in Internet of Things (IoT) environments. To bridge this gap, we propose a hybrid DL-based IDS that leverages the synergistic strengths of convolutional neural networks (CNNs) and gated recurrent units (GRU). While CNNs excel at extracting spatial features from network traffic data, GRUs effectively model temporal dependencies, making their combination particularly well-suited for detecting dynamic and complex IoT intrusions. In this study, we evaluate three DL models including CNN, GRU, and a hybrid CNN-GRU approach on two recent Netflow-based datasets, NF-UNSW-NB15 and NF-CSE-CIC-IDS2018 for binary classification. Extensive experiments using accuracy, precision, recall, F1-score, False Alarm Rate (FAR), AUC, and processing time metrics show that the CNN-GRU model outperforms standalone CNN and GRU models, as well as existing literature approaches, achieving an accuracy of 98.60% on the NF-UNSW-NB15 dataset and 97.95% on the NF-CSE-CIC-IDS2018 dataset. Our findings underscore the efficacy of combining spatial and temporal DL architectures for robust IoT intrusion detection, offering a scalable solution for modern cyber threats.

Keywords: DL, CNN, RNN, GRU, IDS, IoT, Netflow-based dataset

1 Introduction

Modern technology is based on cybersecurity, which is the activity of preventing unwanted access, attacks, or destruction of computer systems, networks, devices, and data. Over time, hackers have developed progressively advanced methods and diverse tactics to breach the defenses established by individuals, organizations, and governments, thus risking global security [1, 2]. By 2025, the cost of cybercrime is estimated to reach $10.5 trillion, with more than 800,000 people falling victim to ransomware attacks, phishing scams, or data breaches each year [3]. This emphasizes the growing sophistication and audacity of cyber attacks. Traditional security measures such as firewalls, antivirus software, and encryption often depend on static rules

Springer Open

© The Author(s) 2025. **Open Access** This article is licensed under a Creative Commons Attribution-NonCommercial-NoDerivatives 4.0 International License, which permits any non-commercial use, sharing, distribution and reproduction in any medium or format, as long as you give appropriate credit to the original author(s) and the source, provide a link to the Creative Commons licence, and indicate if you modified the licensed material. You do not have permission under this licence to share adapted material derived from this article or parts of it. The images or other third party material in this article are included in the article's Creative Commons licence, unless indicated otherwise in a credit line to the material. If material is not included in the article's Creative Commons licence and your intended use is not permitted by statutory regulation or exceeds the permitted use, you will need to obtain permission directly from the copyright holder. To view a copy of this licence, visit http://creativecommons.org/licenses/by-nc-nd/4.0/.

and signatures, making them less effective against arising or unknown threats [4, 5]. Consequently, recent research has encouraged the implementation of IDS as more advanced and dynamic security solutions. In the ever-growing world of IoT, IDSs play an essential role as a first line of protection against the increasing number of network threats. An IDS continuously monitors network traffic, identifying and responding to potential threats quickly. This proactive approach helps mitigate the impact of cyber attacks, ensuring a more robust defense against malicious activities [6]. Given the complexity and rapid evolution of threats in IoT networks, there is a pressing need for intelligent IDS that can autonomously learn from high-dimensional traffic data and reliably identify malicious activity in diverse and dynamic environments.

As various sectors embrace the new era of Artificial Intelligence (AI) and the demonstrated efficiency of DL in numerous fields, the integration of DL techniques into IDS marks a significant advancement in cybersecurity [7]. DL models, particularly convolutional neural networks (CNN) and recurrent neural networks (RNN) such as long-short-term memory (LSTM) and gated recurrent unit (GRU), possess the capability to recognize complicated patterns and features from network traffic data [8]. This makes them exceptionally well-suited for identifying complex and evolving cyber threats within the dynamic IoT environment. Furthermore, DL-based IDS provide more granular insights into network activity, enabling security teams to better understand the nature of attacks and respond more effectively. This integration not only improves the efficiency of threat detection but also increases the overall resilience of the cybersecurity infrastructure [9, 10].However, many existing DL-based IDS solutions rely on either spatial or temporal feature extraction individually. This separation can limit the system's ability to fully capture the multi-dimensional characteristics of network traffic, where both spatial patterns and temporal dependencies are critical for accurate intrusion detection.

To address this limitation, this paper proposes an enhanced IDS framework that integrates CNN and GRU into a unified CNN-GRU architecture, designed to leverage the strengths of both models in capturing spatiotemporal characteristics crucial for accurate intrusion detection. We perform a comprehensive evaluation of three DL models: CNN, GRU, and hybrid CNN-GRU. CNN, which has been widely successful in image processing, has garnered significant research interest in the field intrusion detection. Acting as a feature extractor, CNN is adept at automatically identifying and learning spatial features from complex data due to its deep-based convolution operations [11]. GRU, on the other hand, is extensively used for time series tasks due to its capacity to manage long-term dependencies. Similar to LSTM, GRU effectively mitigates the vanishing gradient problem that traditional RNNs often face [12]. The CNN-GRU model utilizes both algorithms' advantages, using a 1D-CNN layer to capture spatial information and a GRU layer to extract temporal features [13]. The proposed models were evaluated on binary classification tasks using two modern, publicly available Netflow-based datasets: NF-UNSW-NB15 and NF-CSE-CIC-IDS2018. To assess the effectiveness of the proposed methods, extensive training and testing procedures were performed, which demonstrated its potential as a reliable and efficient IDS in IoT networks. The following is an overview of our paper's primary contributions:

- We propose a highly accurate hybrid IDS architecture combining CNN and GRU to jointly capture spatial and temporal features, overcoming the limitations of models that address only one dimension.
- We conduct extensive experiments using two publicly available NetFlow-based datasets, NF-UNSW-NB15 and NF-CSE-CIC-IDS2018, which encompass diverse network configurations and attack scenarios. This ensures a robust and generalizable evaluation of the proposed model.
- We rigorously evaluate the model across multiple metrics, including accuracy, precision, recall, F1 score, false alarm rate (FAR), area under the curve (AUC), and detection speed, demonstrating its effectiveness.

Through detailed comparative analysis, we show that the proposed hybrid CNN-GRU model outperforms standalone CNN and GRU architectures, as well as other state-of-the-art deep learning-based IDS approaches, underscoring its potential as an effective and scalable solution for enhancing the security of Internet of Things (IoT) environments.

The remainder of this paper is as follows: Sect. provides a concise overview of the relevant literature. Section offers a detailed description of the proposed intrusion detection system, including the architectural designs of the CNN, GRU, and hybrid CNN-GRU models. Section describes the two datasets employed in this study, the experimental setup, the evaluation metrics, and the configuration parameters. Section presents and discusses the experimental results, highlighting their implications. Finally, Sect. concludes the paper by summarizing the main contributions and outlining potential directions for future research.

2 Relevant works

Recent research reveals that IDS-based DL has brought substantial improvements to IoT network cybersecurity. Numerous studies have developed highly effective IDS using a range of DL methods, successfully analyzing and protecting against diverse network traffic threats.

In [14], Sarhan et al. introduced the NF-UNSW-NB15 and NF-CSE-CIC-IDS2018 datasets. These are refined versions of the original UNSW-NB15 [15] and CSE-CIC-IDS2018 [16] datasets. Their procedure involves transforming packet capture (pcap) files into the NetFlow format [17], extracting 12 pivotal features, labeling the datasets, and assessing their effectiveness using an Extra Trees ensemble classifier for challenges involving binary and multiclass classification.

In another study, Vishwakarma et al. [18] leveraged the NF-CSE-CIC-IDS2018 and NF-UNSW-NB15 datasets to create a DNN-based IDS tailored for IoT environments, aimed at real-time threat identification. Their experiments confirmed the model's high effectiveness, achieving superior accuracy in both binary and multiclass classifications. Additionally, they validated the model's real-time performance using a testbed equipped with a fire alarm system and smart room lighting.

Similarly, reference [19] presents an enhanced NIDS using graph neural networks (GNNs), a novel field of deep neural networks that capitalizes on the inherent structure of data based on graphs. The authors propose E-GraphSAGE, which, in order to

identify attack flows, records edge characteristics and a network flow graph's topological layout. Experimental evaluation on two IoT NIDS datasets, NF-BoT-IoT and NF-ToN-IoT, shows that the suggested E-GraphSAGE-based NIDS outperforms the most advanced ML-based classifiers in terms of performance.

In addition, Krishnan et al. [20] provide a novel method to identify suspected and previously Unseen threats in IoT networks. Their work introduces a multi-classifier based on MLP to identify known attacks, an autoencoder to detect zero-day attacks, and an optimized matrix learning vector quantization (LGMLVQ) technique for selecting features in imbalanced datasets. The model exhibits strong performance on new data, achieving an accuracy of 97.26% on the NF-CSE-CIC-IDS2018 datasets.

To solve the problem of class imbalance, Cao et al. [21] propose a novel sampling technique that combines ADASYN and RENN as well a RF algorithm with Pearson's correlation analysis. After that, an improved IDS-based DL strategy that blends CNN and GRU models is used. Significant accuracy of 86.25%, 99.69%, and 99.65% were attained by the trials conducted on the NSL-KDD, UNSW-NB15, and CIC-IDS2017 datasets, respectively. This approach successfully resolves issues with low accuracy and unequal class distribution..

According to [22], the paper introduces the WideDeep model, that employs a novel combination of wide and deep transfer methods. The WideDeep model is tailored to effectively manage multi-variate time series and multi-dimensional point data for tasks involving regression and classification. By integrating the straightforward memorization strengths of a linear regression technique with the advanced generalization abilities of a deep GRU model, WideDeep offers a powerful solution for intrusion detection. The model utilizes a transfer learning approach that involves extensive pre-training followed by multiple fine-tuning phases on the same dataset to achieve optimal results. The experimental evaluation shows that WideDeep excels with impressive accuracy rates of 99.92% on the KDDCup 99 (10%) dataset and 94.22% on the UNSW-NB15 dataset. It significantly surpasses previous methods and achieves peak performance rapidly during the training phase.

In research [23], authors present a novel intrusion detection framework leveraging transfer learning, designed to handle the challenges of 5 G IoT environments with limited and imbalanced labeled datasets, like the UNSW-NB15 dataset. By incorporating CNN and employing advanced model refinement strategies, the framework excels in identifying zero-day attacks. Its performance is marked by high accuracy and minimal false predictions. Comparative evaluations on targeted datasets demonstrate that this framework outperforms existing DL-based IDS in detecting both established and new attack vectors.

In our earlier work, we introduced an advanced IDS that utilizes DL to predict and classify malicious cyberattacks within IoT network traffic. In [24], we proposed two variants of the RNN model: LSTM and BiLSTM. Building on this, in [25], we developed an IDS architecture that combines CNN with LSTM to extract spatial and temporal characteristics. We rigorously tested these models on the CSE-CIC-IDS2018 dataset across both binary and multiclass classification, achieving remarkable findings in terms of accuracy, F1 score, precision, and recall, outperforming previous approaches in the literature.

Furthermore, research [26] employed various variants of DL models such as DNN, CNN, and RNN to enhance intrusion detection systems' resilience in dynamic IoT environments. RNN1 achieves the best results compared with other DNN and CNN architectures. However, these models face many challenges like poor performance in detecting long duration attacks and vanishing gradient, which limits the system's ability to fully understand the multifaceted nature of cyberattacks, especially in the dynamic context of IoT networks where both spatial structures and temporal behaviors are intricately intertwined. For that numerous studies have demonstrated that DL models can effectively extract spatiotemporal features from network traffic. The study [27] aims to systematically review the advancements in deep learning for spatiotemporal feature extraction and data imbalance. The author analyzed the spatiotemporal dependencies of CNN and RNN in the extraction of network traffic characteristics. They explored the advantages and disadvantages of the CNN-RNN hybrid model in capturing complex spatiotemporal features and the potential of GANs in solving data imbalance problems. Similarly, in our recently work [28], a comprehensive comparative study was conducted that evaluated the performance of four DL architectures including CNN-LSTM, CNN-BiLSTM, CNN-GRU, and CNN-BiGRU. Experiments were conducted on NF-UQ-NIDS dataset, which combines four well-known datasets: NF-BoT-IoT, NF-ToN-IoT, NF-UNSW-NB15, and NF-CSE-CIC-IDS2018, for binary classification. The study underscores the potential of combining spatial and temporal DL models for advanced network security applications.

3 Methods

The current section outlines the workflow of the suggested methodology. As depicted in Fig. 1, there are three key stages to the entire process. The first step encompasses data collection, preprocessing, as well as the distinction of training and testing sets. The second phase centers on using our three DL models to focus on intrusion detection and data classification. The final phase involves assessing performance and conducting a thorough analysis of the results.

3.1 GRU model

GRU, a specialized variant of RNN, has gained widespread recognition for its application across multiple fields, such as speech recognition, time series forecasting, natural

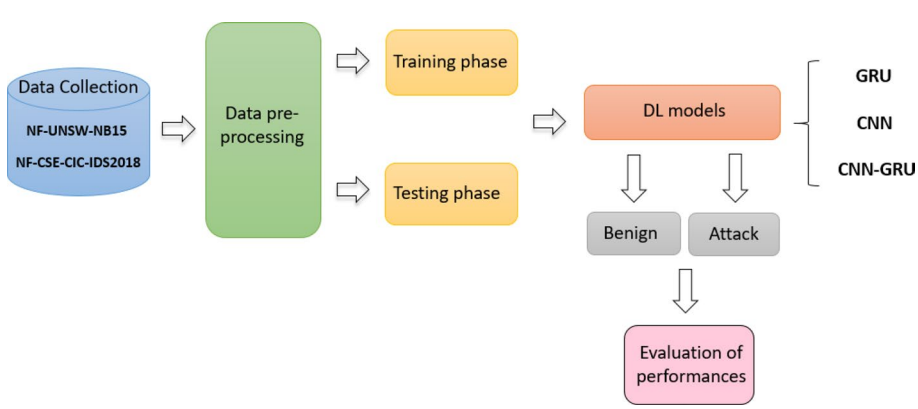

Fig. 1 The proposed method's workflow

language processing (NLP) and Video Analytics. Its design is specifically tailored to effectively dependencies over time in data sequence, addressing the challenges posed by the issue of the vanishing gradient that often plagues traditional RNNs. The architecture of the GRU, as illustrated in Fig. 2, is characterized by its two essential gates: the Update gate and the Reset gate. The update makes decisions on whether to maintain or discard information as new data is processed. Meanwhile, the Reset gate defines the degree to which the past memory should be reset, allowing the model to concentrate on pertinent sequence information. This integration of gates within the GRU results in a more simplified and efficient architecture, with fewer tensor operations and a reduced number of training parameters. Consequently, GRUs offer faster training times and improved convergence, making them a preferred choice in scenarios where computational efficiency and model performance are critical [29].

As depicted in Fig. 3, our GRU model architecture comprises several layers designed for optimal processing and classification of network traffic data. First, an input layer was employed that takes eight features representing the traffic flow. Then, two GRU layers was configured with 128 and 64 units, respectively, enabling the model to effectively capture both long-term dependencies and detailed temporal patterns within the data. A ReLU activation function was adopted within the GRU layers, ensuring that all non-positive inputs are set to zero to prevent the diminishing of gradients. Additionally, a normalization layer was placed after each GRU layer, which calculates normalization statistics from the input neurons. This is an essential step for stabilizing the hidden state dynamics of the GRU, guaranteeing consistent training and reliable model behavior. After that, we added dropout layer with a 0.3 dropout rate to reduce overfitting, by randomly deactivating specific neurons during training, these layers compel the model to pick up more resilient properties. The final stages of the architecture include a dense layer, which consolidates the learned features, and a layer of output equipped with softmax as an activation function to determine if a sample is an attack or not.

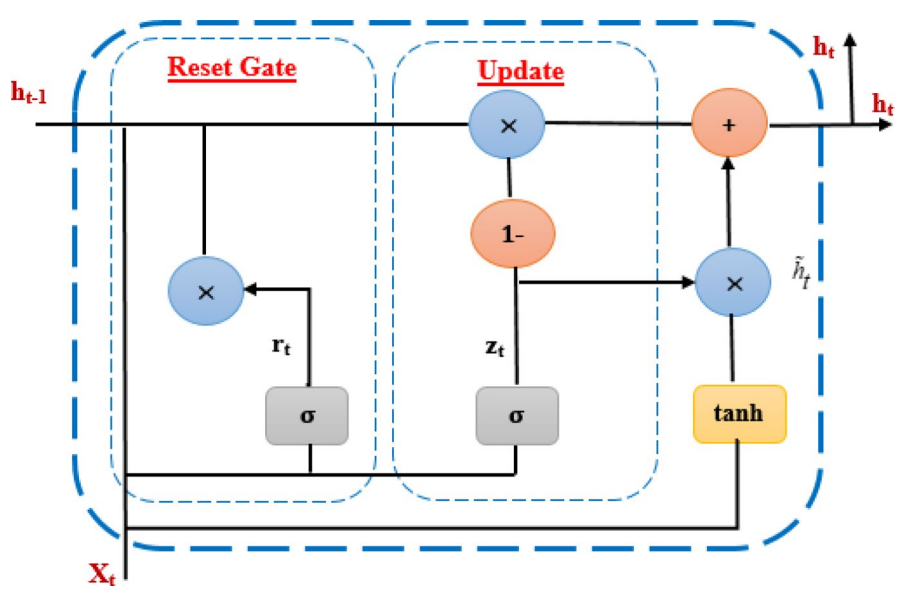

Fig. 2 Structure of GRU cell

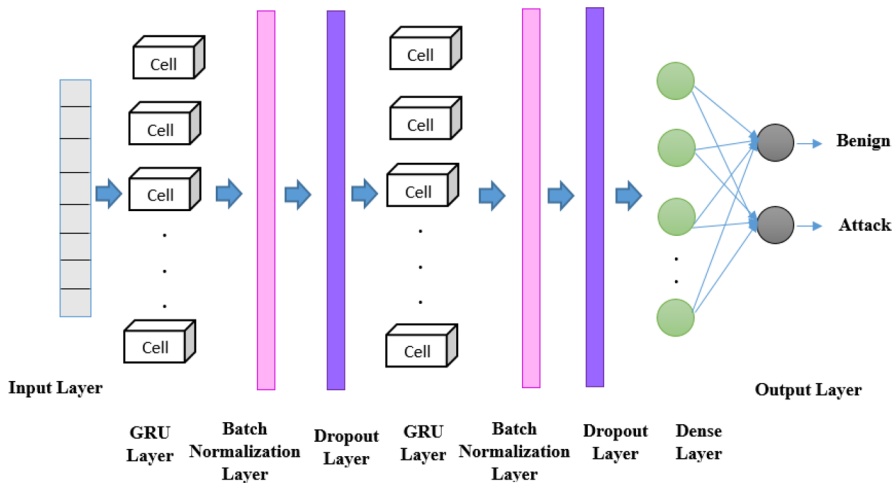

Fig. 3 GRU model architecture

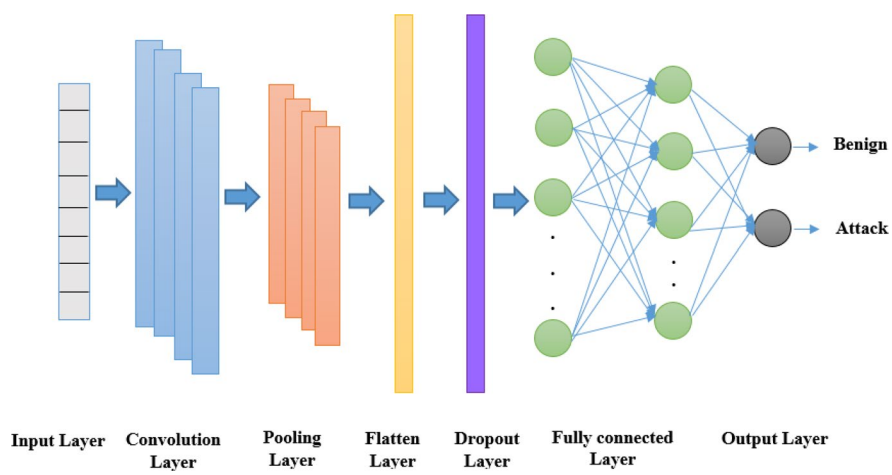

Fig. 4 CNN model architecture

3.2 CNN model

CNN is a DL architecture explicitly crafted for efficiently extracting spatial features from raw input data. The architecture generally consists of an input layer, followed by several convolutional and pooling layers dedicated to feature extraction, and ultimately ends with fully connected layers along with a softmax classifier for the purpose of classification. In computer vision, CNNs have gained widespread success, achieving high accuracy levels that sometimes rival or even surpass human performance [30]. Recent, CNNs are used for supervised feature extraction as well as classification in the context of IDS. As shown in Fig. 4, Our model for CNN structured as follows: The input layer receives feature maps, which are then processed by a one-dimensional CNN (1D-CNN) layer with 64 filters. This layer takes an input vector of size 8×1 and extracts spatial features during the training process. The activation function then generates the feature maps for the subsequent layer. These feature maps' dimensionality is decreased by the max-pooling layer, which summarizes the local values from the preceding layer. Following this, a

one-dimensional vector is created from the multi-dimensional outputs by a flattening layer, enabling the transition to the final stage. To categorize the output characteristics into the appropriate classes, a fully connected layer using a softmax activation function. Additionally, a Dropout layer probability of 0.3 is incorporated to prevent overfitting by randomly turning off a portion of neurons while training, guaranteeing that the model performs well when applied with new data.

3.3 CNN-GRU model

Figure 5 illustrates the CNN-GRU paradigm, which integrates a 1D-CNN with a GRU layer for effective intrusion detection in IoT network traffic. An input layer comes first in the architecture, then a 1D-CNN with 64 filters that processes an 8×1 input vector to extract spatial features using the ReLU activation function. After that, a max-pooling layer lowers the data's dimensionality. For ensuring faster and more stable training, a batch normalization layer is incorporated to adjust the parameters between layers. The output is then passed to a GRU layer with 128 units, which captures temporal dependencies. A 0.3 probability dropout layer is added to enhance the stability of hidden states and reduce overfitting risks. The final stages include a fully connected layer and an output layer that uses a Softmax activation function for classification. This method effectively uses the CNN to learn spatial characteristics, making it ideal for low-resource IoT sensors. Then, the GRU analyzes sequential patterns. In addition to making the parameter structure simpler, this integration improves the system's capacity to manage long-term dependencies, which raises intrusion detection accuracy.

4 Experimental study

4.1 Datasest

Datasets play a crucial role in evaluating IDS methods based on DL [31]. The quality of these datasets significantly influences the precision and robustness of the models, particularly in assessing the effectiveness of the suggested IDS to identify threats [32]. To ensure robust evaluation, we utilized two publicly available benchmark NetFlow-based

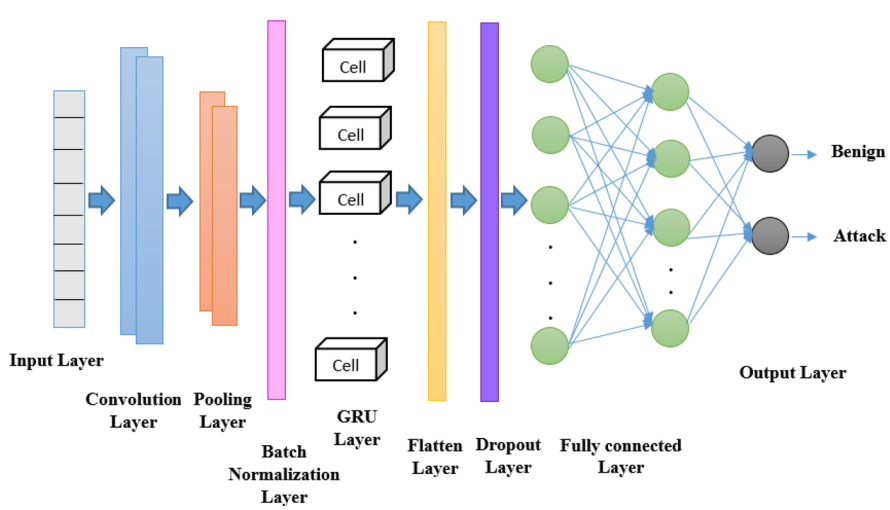

Fig. 5 CNN-GRU model architecture

Table 1 Distribution of NF-UNSW-NB15 dataset

Total	Benign count	Attack count	Attack type
1,623,118	1,550,712	72,406	(Benign: 1,550,712), (Fuzzers: 19,463), (Analysis: 1,995), (Backdoor: 1,782), (DoS: 5,051), (Exploits: 24,736), (Generic: 5,570), (Reconnaissance: 12,291), (Shellcode: 1,365), (Worms: 153)

Table 2 Distribution of NF-CSE-CIC-IDS2018 dataset

Total	Benign count	Attack count	Attack type
8,392,2401	7,373,198	1,019,203	(Benign: 5,534,773), (DoS attacks-Hulk: 108,129), (SSH-Bruteforce: 71,148), (Infiltration: 59,374), (DDoS attacks-LOIC-http: 49,751), (DoS attacks-GoldenEye: 32,582), (DoS attacks-Slowloris: 17,109), (Bot: 15,498), (DoS attacks-SlowHTTPTest: 14,116), (FTP-BruteForce: 14,116), (DDOS attack-LOIC-UDP: 1,667), (DDOS attack-HOIC: 230), (Brute Force-Web: 173), (Brute Force-XSS: 101), (SQL Injection: 36)

datasets: NF-UNSW-NB15 and NF-CSE-CIC-IDS2018. Below is a synopsis of these datasets.

4.1.1 NF-UNSW-NB15 dataset

Sarhan et al. [14] introduced the NF-UNSW-NB15, a NetFlow-based version of the UNSW-NB15 dataset, to address critical issues like dimensional overload and difficulties evaluating machine learning models' ability to generalize across various NIDS datasets with a particular feature set. The dataset consists of 1,623,118 data flows, including 1,550,712 (95.54%) benign samples and 72,406 (4.46%) attack samples. Notably, the NF-UNSW-NB15 dataset encompasses a broad spectrum of attacks divided into nine distinct subcategories; yet, it reflects a significant class imbalance between benign and attack traffic instances. The distribution details of this dataset are summarized in Table 1.

4.1.2 NF-CSE-CIC-IDS2018 dataset

The initial pcap files from the CSE-CICIDS2018 dataset were leveraged to develop the NF-CSE-CICIDS2018 dataset, which is based on NetFlow and includes a standardized set of features. This dataset consists of 8,392,401 flow records, with 7,373,198 (87.86%) representing benign traffic and 1,019,203 (12.14%) corresponding to attacks. The NF-CSE-CICIDS2018 dataset encompasses a broad spectrum of attacks classified into 14 categories. It effectively simulates real-world IoT environments, where benign activities typically outnumber malicious ones. Table 2 presents a detailed breakdown of this dataset.

4.1.3 Preprocessing dataset

The datasets utilized in this study were generated through transforming the initial raw NIDS packet capture files (.pcap) into net flow format utilizing a specific probe instrument. This conversion yielded a dataset with 12 features, as specified in Table 3. To guarantee the integrity of the analysis and decrease the likelihood of model overfitting, we applied several preprocessing techniques, including data cleaning, feature selection, feature encoding, and normalization. We began with a comprehensive data cleaning

Table 3 Selected features

Features	Selected features
IPV4 SRC ADDR, IPV4 DST ADDR, L4 SRC PORT, L4 DST PORT, PROTOCOL, TCP FLAGS, L7 PROTO, IN BYTES, OUT BYTES, IN PKTS, OUT PKTS, FLOW DURATION MILLISECONDS	PROTOCOL, TCP FLAGS, L7 PROTO, IN BYTES, OUT BYTES, IN PKTS, OUT PKTS, FLOW DURATION MILLISECONDS

Table 4 Dataset overview

Datasets	Train	Test
NF-UNSW-NB15	1,298,494	324,624
NF-CSE-CIC-IDS2018	6,713,920	1,678,481

procedure [33], which involved identifying and removing rows with missing values to prevent disruptions in model training, as well as eliminating duplicate records to avoid skewed class distributions and redundant learning. Following cleaning, a feature selection step was conducted to reduce dimensionality and eliminate attributes that could introduce bias or noise. Specifically, the features IPV4 DST ADDR, L4 DST PORT, L4 SRC PORT, and IPV4 SRC ADDR were deliberately excluded. This choice was decided to remove any potential bias that could emerge from these features, which might otherwise disproportionately influence the model's predictions. The refined dataset was then simplified to eight key features, selected for their significant impact on the classification results. These features passed through normalization, assuring their values fell within the standardized range of 0 to 1 using Min-Max scaling. This ensured that features with larger numeric ranges did not dominate those with smaller scales, allowing the model to converge more efficiently during training. To facilitate the model's interpretation of class labels in the binary classification task, benign instances were encoded as 0, while attack instances were represented by 1, enabling clear differentiation between classes. Finally, the dataset was divided into subsets for training and testing, with 80% going toward model training and the remainder, or 20%, going toward performance testing, as indicated in Table 4.

4.2 Setup

Python language (version 3.7.13), tensorFlow (version 2.9.1), the Keras (version 2.9.0) framework, and a number of additional library packages, including pandas, numpy, matplotlib, and Sklearn, are used in the analyzes, which are performed on a Windows 10, 64-bit operating system environment. Furthermore, it was configured with an Nvidia GeForse GT710 GPU, 16 GB of RAM, and an Intel(R) Core(TM) i7-8700U CPU operating at 3.20 GHz.

4.3 Evaluation criteria

Based on the following variables, a variety of metrics are produced to assess IDS performance [34]:

- True Positive (TP): total assault specimens that were accurately classified.

- False Positive (FP): total misclassified benign specimens.
- True Negative (TN): total benign specimens that were accurately classified.
- False Negative (FN): total misclassified attack specimens.

The proposed LSTM, BiLSTM, GRU, and BiGRU approaches were verified utilizing accuracy, recall, precision, and F1 Score. Additionally, We also computed the false alarm rate (FAR), which quantifies the proportion of inaccurate positive predictions (false alarms) to all of the dataset's real negative occurrences. The calculation method of these indicators is shown in formulas 1, 2, 3, 4 and 5.

$$\text{Accuracy} = \frac{(\text{TP} + \text{TN})}{(\text{TP} + \text{FP} + \text{TN} + \text{FN})} \tag{1}$$

$$\text{Precision} = \frac{\text{TP}}{(\text{TP} + \text{FP})} \tag{2}$$

$$\text{Recall} = \frac{\text{TP}}{(\text{TP} + \text{FN})} \tag{3}$$

$$\text{F1score} = 2 \times \frac{(\text{Precision} \times \text{Recall})}{(\text{Precision} + \text{Recall})} \tag{4}$$

$$\text{FAR} = \frac{\text{FP}}{(\text{FP} + \text{TN})} \tag{5}$$

4.4 Model parameters

To reach the convergence stage, most DL networks need a large number of training iterations. However, by choosing a specific parameter configuration that allows for greater convolution throughout the training phase, the number of iterations must create and guide the network structure can be decreased [35]. We tuned the binary class models using different hyperparameters for that purpose.

The model's neurons' weight and bias are modified via an optimizer. Every training cycle ends with an adjustment made by comparing the predicted label with the data label. Three popular optimizers are tested in this study: adaptive moments (Adam) [36], stochastic gradient descent (SGD) [37], and RMS Prop (Root Mean Square) [38]. Following a number of studies, we settle on the Adam optimizer and adjusted its weights using a binary cross-entropy loss function.

When creating DL techniques, learning rate is a crucial factor [39]. It specifies the maximum number of steps the optimization algorithm will require to change the model's weight throughout each iteration. We ran a number of tests with various learning rates using the Adam optimizer of 0.01, 0.001 and 0.0001, and 0.001 is considered the most appropriate value with maximum detection rate and highest validation accuracy [40].

A DL algorithm's activation function is vital because it enables the model to carry out intricate computations that produce output which is not proportional to the input. We

investigated a number of activation functions in this study, including Softmax, Tanh, ReLU, Leaky ReLU, and sigmoid [41]. In conclusion, the ReLU activation function finds application in both the dense layer and convolution layers. In the output layer, softmax activation is employed.

In DL systems, batch size is another fundamental hyperparameter that needs to be adjusted [42]. Accordingly, Larger batch sizes speed up training but may lead to worse generalization in testing, resulting in a larger generalization gap. To determine which batch sizes such as 32, 64, 128 and 256 would work best, we conducted a series of trials. The best combination to train and test our models was found to be 64 batch sizes and 10 patience iterations.

In order to limit the enormous number of epochs and avoid overfitting, an early stopping approach was finally applied [43]. When the validation loss does not decrease, it so stops the training process at a specified amount of iterations. This paper employed a binary cross-entropy loss function and trained all models across 50 epochs. Table 5 presents a comprehensive summary of the architectural design and training parameters employed for each proposed CNN, GRU, and CNN-GRU models.

5 Result and discussion

5.1 Performance comparison

The effectiveness of the suggested approach is rigorously assessed through extensive experiments conducted on the NF-UNSW-NB15 and NF-CIC-IDS-2018 datasets. The following subsections provide a thorough analysis of the findings in every dataset.

5.1.1 NF-UNSW-NB15 dataset outcomes

Throughout the training process, accuracy and loss metrics were tracked for each model at every epoch for both training and validation datasets. Figure 6 highlights the

Table 5 Model architecture and training configurations for CNN, GRU, and CNN-GRU

Component	CNN	GRU	CNN-GRU
Input Shape	(8, 1)	(8, 1)	(8, 1)
Main Layers	Conv1D(64) → MaxPooling → Flatten → Dropout → Dense → Output	GRU(128) → Norm → GRU(64) → Norm → Dropout → Dense → Output	Conv1D(64) → MaxPooling → BatchNorm → GRU(128) → Dropout → Dense → Output
Conv1D Filters	64	–	64
Kernel Size	3	–	3
Activation Function	ReLU (Conv), Softmax (Output)	ReLU (GRU, Dense), Softmax (Output)	ReLU (Conv), Softmax (Output)
GRU Units	–	128, 64	128
Dropout Rate	0.3	0.3	0.3
Output Layer	2 neurons, Softmax activation	2 neurons, Softmax activation	2 neurons, Softmax activation
Loss Function	Binary Crossentropy	Binary Crossentropy	Binary Crossentropy
Optimizer	Adam	Adam	Adam
Learning Rate	0.001	0.001	0.001
Batch Size	64	64	64
Epochs	50	50	50
Early Stopping	Yes	Yes	Yes

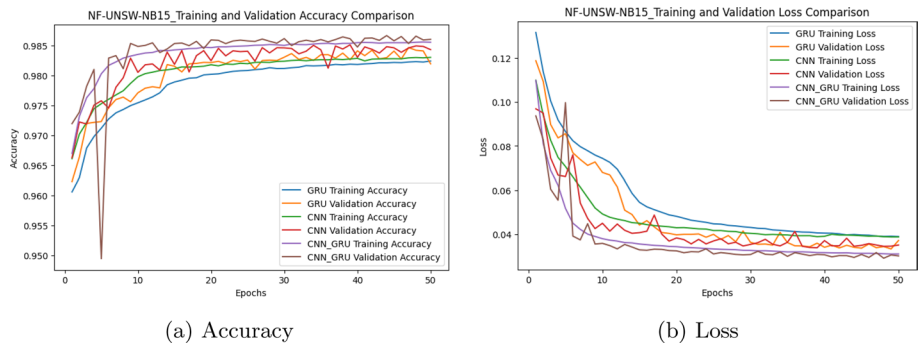

(a) Accuracy (b) Loss

Fig. 6 NF-UNSW-NB15 - Training and Validation comparison: **a** Accuracy, **b** Loss

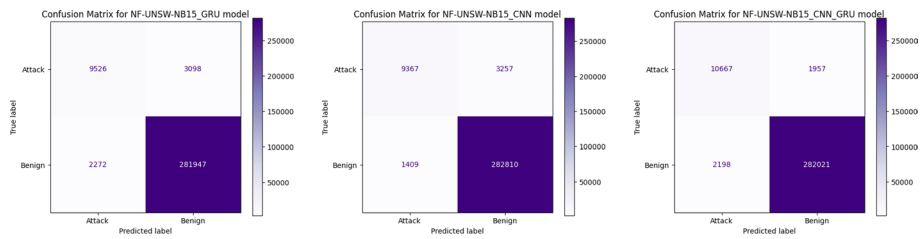

(a) (b) (c)

Fig. 7 Confusion Matrix comparison for NF-UNSW-NB15 dataset: **a** GRU model, **b** CNN model, **c** CNN-GRU model

progression of these metrics over 50 epochs for the GRU, CNN, and CNN-GRU models on the NF-UNSW-NB15 dataset. The training accuracy consistently rises with each epoch across all models, signifying effective learning from the data. Conversely, the validation accuracy fluctuates initially, especially in the GRU and CNN models, before stabilizing. The CNN-GRU model, in particular, shows an early dip in validation accuracy around epoch 5, followed by a recovery and stabilization. Both training and validation losses generally decline over the epochs, with some variability, indicating that the GRU and CNN models are learning effectively and generalizing well. However, the CNN-GRU model exhibits an initial increase in validation loss, peaking around epoch 5, before it begins to decrease and stabilize.

Figure 7 describes the confusion matrices for all three models used on the NF-UNSW-NB15 dataset. According to an analysis of these matrices, all models successfully identified the classes, demonstrating their overall effectiveness. Interestingly, the CNN-GRU model shows the best true positive count and the lowest false negative count, highlighting its ability to identify assault incidents and get a high recall rate. The GRU model's confusion matrix illustrates strong performance in accurately identifying the benign class. However, the CNN model reveals a significant number of misclassified attack records, pointing up certain difficulties in differentiating across classes.

Our models' efficacy is assessed using receiver operating characteristic (ROC) curves, which are crucial resources for examining how well DL models perform in binary categorization. The ROC curve graphs the true positive rate (TPR) versus the false positive rate (FPR), having a model operating more effectively when it attains

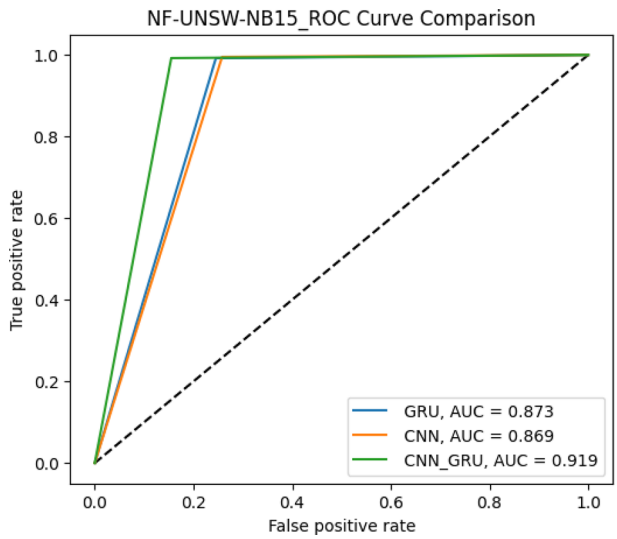

Fig. 8 ROC Curve comparison for NF-UNSW-NB15 dataset

Table 6 NF-UNSW-NB15 dataset performance for binary classification

Model	Class	Accuracy	Precision	Recall	F1 Score	FAR
GRU	Attack	98.19%	80.74%	75.46%	78.01%	0.008
	Benign		98.91%	99.20%	99.06%	0.2454
CNN	Attack	98.43%	86.92%	74.20%	80.06%	0.005
	Benign		98.86%	99.50%	99.18%	0.258
CNN-GRU	Attack	98.60%	82.91%	84.50%	83.70%	0.0077
	Benign		99.31%	99.23%	99.27%	0.155

a lower FPR and a higher TPR. The area under the curve (AUC) complements this by providing a numerical score that reflects the model's overall ability to distinguish between classes; a higher AUC indicates greater robustness and generalizability. Figure 8 presents the ROC curves for the GRU, CNN, and CNN-GRU models on the NF-UNSW-NB15 dataset. Among these, CNN-GRU proves to be the most effective, with a remarkable AUC score of 0.919, demonstrating its superior capability in differentiating between attack and benign classes.

Table 6 summarizes the achievement of the CNN, GRU, and CNN-GRU approaches on the NF-UNSW-NB15 dataset, using five critical indicators: Accuracy, F1-score, precision, recall, and FAR. According to Fig. 9, the CNN-GRU method achieved the greatest accuracy at 98.60%, then came the CNN at 98.43% and the GRU at 98.19%. Notably, the CNN-GRU model demonstrated outstanding precision and F1-scores for the benign class, with measures of 99.31% and 99.27%, respectively. The benign class achieved a high recall of 99.23%, while the attack class showed a lower recall of 84.50%, indicating a proportion of attacks were misclassified as benign. This misclassification can be attributed to several factors, including class imbalance in the NF-UNSW-NB15 dataset, where benign traffic significantly outnumbers attack traffic. In terms of FAR, CNN-GRU exhibited a low FAR of 0.0077 for the attack

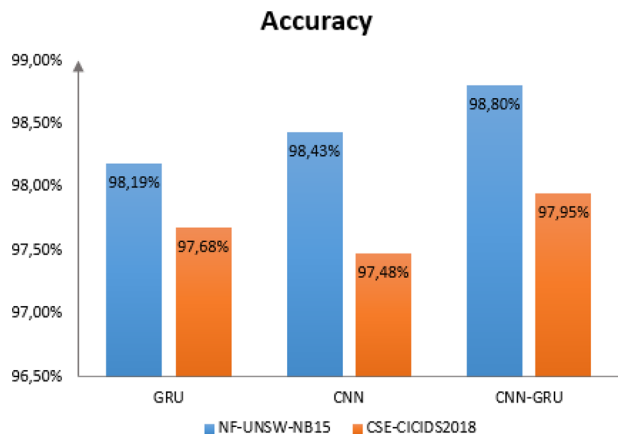

Fig. 9 Accuracy comparison

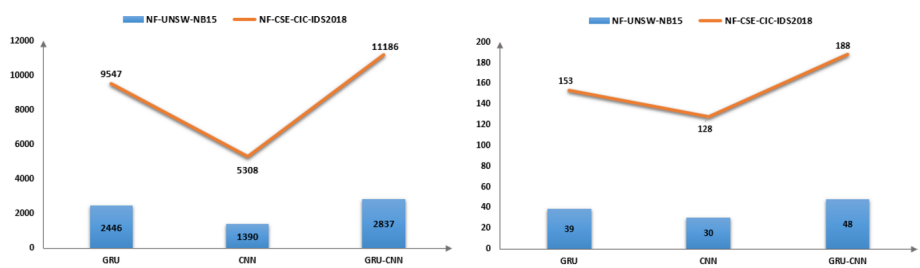

(a) Training Time (s) (b) Prediction Time (s)

Fig. 10 Comparative analysis of the computational time requirement: **a** Training Time, **b** Prediction Time

categories, compared to 0.155 for the benign class, demonstrating strong capability in minimizing false positives but occasional misclassification of benign traffic as malicious. The CNN model also performed well, with superior F1 score, precision, and recall compared to the GRU method. The FAR for the attack class was the lowest at 0.005 for CNN and 0.008 for GRU, while for the benign categories, it was 0.258 and 0.2454, respectively. These findings highlight that the CNN-GRU hybrid model effectively leverages both spatial and temporal features, resulting in superior classification performance, particularly for benign instances, while still requiring improvement in capturing minority attack behaviors.

Figure 10 illustrates the computational time required by the proposed models on our dataset. The CNN-GRU model, due to its complex architecture, exhibits the longest training duration for the NF-UNSW-NB15 dataset, taking 2,837 s, followed by the GRU model, which takes 2,446 s, as shown in Fig. 10a. In contrast, our CNN architecture demonstrates a significantly lower computational processing time, requiring only 1,390 s for training and 30 s for prediction. This is in comparison with the GRU and CNN-GRU models, which require 39 and 48 s, respectively, for the prediction phase, as depicted in Fig. 10b.

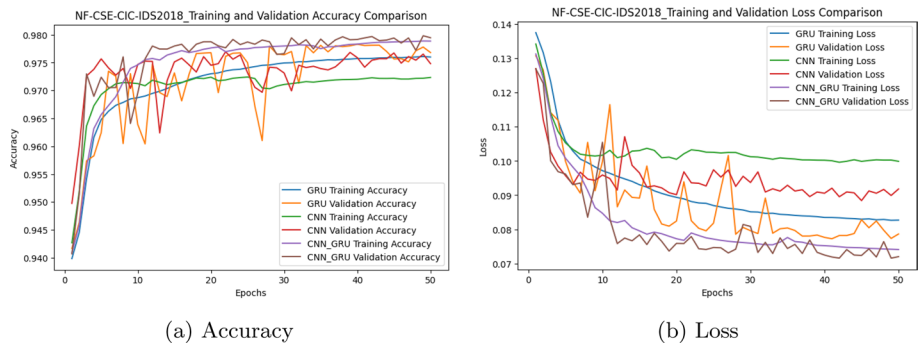

(a) Accuracy (b) Loss

Fig. 11 NF-CSE-CIC-IDS2018 - Training and Validation comparison: **a** Accuracy, **b** Loss

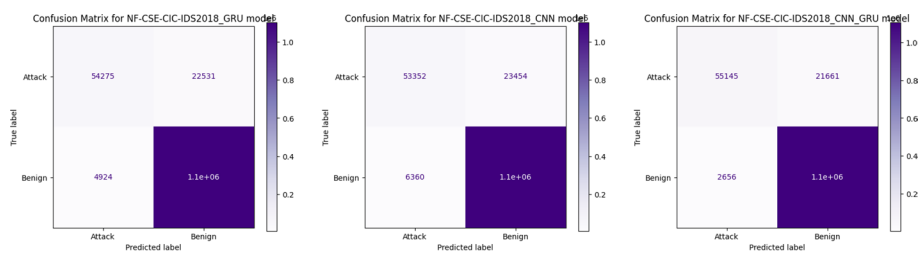

(a) (b) (c)

Fig. 12 Confusion Matrix comparison for NF-CSE-CIC-IDS-2018 dataset: **a** GRU model, **b** CNN model, **c** CNN-GRU model

5.1.2 NF-CSE-CIC-IDS2018 dataset outcomes

The relationship between training and validation accuracy for the NF-CSE-CIC-IDS2018 dataset is illustrated in Fig. 11a. The training accuracy consistently increases across epochs for all models, reflecting effective learning from the training data. In contrast, the validation accuracy shows more variability. Initially, it rises, but between epochs 7 and 35, it fluctuates significantly, reaching several peaks before eventually stabilizing, particularly in the CNN and GRU models. For the CNN-GRU approach, validation accuracy exhibits a steady increase with minimal fluctuation, indicating effective and stable learning. As for the loss metrics depicted in Fig. 11b, the training loss consistently decreases throughout the epochs across all models. Meanwhile, the validation loss initially decreases but then fluctuates, peaking before it eventually stabilizes.

Figure 12 displays the confusion matrices for each of the three models tested on the NF-CSE-CIC-IDS2018 dataset. The CNN-GRU approach attains a high number of true positives, underscoring its ability to reliably detect attack instances. The GRU model also performs well, particularly in recognizing benign traffic with precision. However, the CNN model faces challenges, as indicated by a considerable number of misclassified attack cases, suggesting difficulty in effectively differentiating between the classes.

Figure 13 provides an assessment of the ROC curves for the GRU, CNN, and CNN-GRU models evaluated on the NF-CSE-CIC-IDS2018 dataset. The ROC curves illustrate how each model performs across various threshold settings. Yielding an AUC score of 0.858, the CNN-GRU model excels in differentiating between attack and

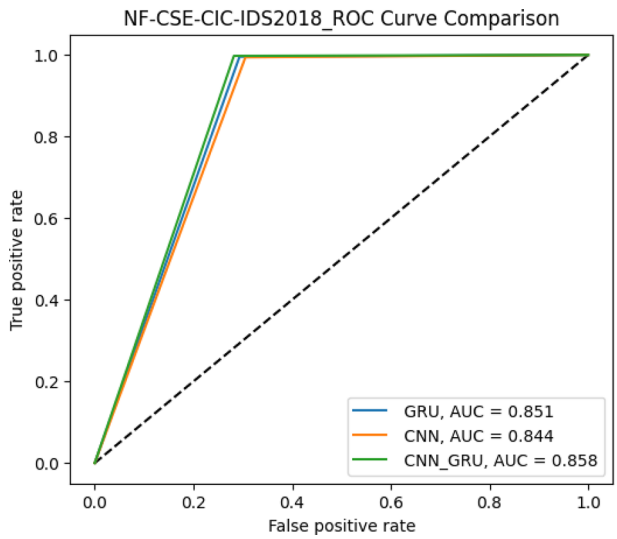

Fig. 13 ROC Curve comparison for NF-CSE-CIC-IDS2018 dataset

Table 7 NF-CSE-CIC-IDS2018 dataset performance for binary classification

Model	Class	Accuracy	Precision	Recall	F1 Score	FAR
GRU	Attack	97.68%	91.68%	70.67%	79.81%	0.0044
	Benign		98%	99.56%	98.77%	0.2933
CNN	Attack	97.48%	89.35%	69.46%	78.16%	0.0057
	Benign		97.91%	99.43%	98.66%	0.3054
CNN-GRU	Attack	97.95%	95.40%	71.80%	81.93%	0.0024
	Benign		98.08%	99.76%	98.91%	0.282

benign classes. This high AUC value indicates its strong predictive capability and reliability in classifying instances accurately, outperforming both the GRU and CNN models with values of 0.851 and 0.844 respectively.

The analysis of the binary NF-CSE-CIC-IDS2018 dataset, as displayed in Table 7, reveals that the CNN-GRU model excels in performance, as depicted in Fig. 9. This model accomplished an impressive accuracy of 97.95%, and superior precision and F1-scores across both attack and benign classes. The benign class exhibited a remarkable recall of 99.76%, significantly higher than the 71.80% recall for the attack class. This limitation suggests that although the model is effective at detecting benign behavior, it struggles with identifying all attack types correctly. This is due to some attack types which are significantly underrepresented in the dataset, which can lead to bias toward the majority benign class during training. Moreover, specific attacks often exhibit behaviors that closely resemble legitimate activity. Additionally, the model demonstrated a low FAR of 0.0024 for the attack class, in contrast to 0.248 for the benign class reinforcing that the model is conservative in flagging attacks. On the other hand, the GRU model outperformed the CNN model slightly, with an accuracy of 97.68% compared to CNN's 97.48%. The GRU model also demonstrated robust metrics for the benign class, achieving a precision of 98%, an F1-score of 98.77%,

and a recall of 99.56%. For the attack class, the FAR was 0.0044 for the GRU model and 0.0057 for the CNN model, while for the benign class, the FARs were 0.2933 and 0.3045, respectively.

Regarding processing time, the NF-CSE-CIC-IDS2018 dataset exhibits a greater challenge due to its large size, resulting in longer processing durations compared to the NF-UNSW-NB15 dataset. As depicted in Fig. 10, the CNN-GRU model, owing to its intricate design, takes the most time, with 11,186 s for training and 188 s for prediction. The GRU model also demands substantial time, requiring 9,547 s for training and 153 s for prediction. On the other hand, our CNN model stands out for its efficiency, needing only 5,308 s for training and 128 s for prediction. These results highlight a trade-off between model complexity and processing efficiency, which is particularly important for deployment in resource-constrained IoT environments, where limited processing power, memory, and energy consumption are critical constraints.

5.2 State of the art comparison

Building on our earlier discussion, this paper conducted binary classification using three models: GRU, CNN, and CNN-GRU. The models were evaluated on the NF-UNSW-NB15 and NF-CSE-CIC-IDS2018 datasets. According to Table 7, our CNN-GRU model outperformed previously explored IDS approaches on the NF-UNSW-NB15 dataset. It attained an accuracy of 98.60%, surpassing the 1D-CNN model from [44], which reached 98.32%, as well as the XGBoost and MLP models from [26], which recorded accuracies of 97.40% and 95.60%, respectively. Similarly, for the NF-CSE-CIC-IDS2018 dataset, Table 8 Indicates the strongest performance reported in [20] was achieved by a stacked MLP, with an accuracy of 97.26%. The GNN [45] model attained an accuracy of 95.33%, while the Extra Trees classifier in [14] reached 95.33%. The selection of these existing models for comparison was based on their prominence and widespread use in recent IDS research for similar dataset. Our CNN-GRU model surpassed all these models, achieving better performance in terms of accuracy and robustness, suggesting that combining spatial feature extraction (CNN) and temporal dependencies (GRU) offers a more effective approach for intrusion detection in IoT environments.

Table 8 Comparison with existing approaches on NF-UNSW-NB15 and NF-CSE-CIC-IDS2018 datasets

NF-UNSW-NB15 dataset			NF-CSE-CIC-IDS2018 dataset		
Ref	**Approach**	**Accuracy**	**Ref**	**Approach**	**Accuracy**
[44]	1D-CNN	98.32%	[20]	Stacked MLP	97.26%
[26]	XGBoost	97.40%	[45]	GNN	95.79%
[26]	MLP	95.60%	[14]	Extra Trees	95.33%
Our work	**CNN-GRU**	**98.60%**	**Our work**	**CNN-GRU**	**97.95%**

The values shown in bold represent the performance of our proposed CNN-GRU model, which achieved the highest accuracy among all compared methods for each respective dataset

6 Conclusion and future scope

The goal of this study was to create an effective IDS for IoT networks based on three DL models: GRU, CNN, and CNN-GRU. The CNN component targeted to capture spatial features within the data, while the GRU model was crafted to learn and manage the temporal sequences and dependencies. Through the combination of these two methods, the CNN-GRU architecture successfully integrated temporal and spatial information, offering a complete solution for network anomaly detection. Two comprehensive large NetFlow-based datasets, NF-UNSW-NB15 and NF-CSE-CIC-IDS2018, were used in the experiments to thoroughly evaluate the models. The assessment process utilized binary classification and several performance indicators, such as F1 score, recall, accuracy, and precision, AUC, FAR, and computational speed. Results showed that the proposed CNN-GRU model achieved superior performance, surpassing both the standalone CNN and GRU models and recent literature approaches. In the future, the research plans to explore data augmentation techniques to address class imbalance issues, especially in underrepresented attack categories, to enhance detection performance and generalization. Additionally, we aim to apply techniques like cost-sensitive learning or attention mechanisms for deeper analysis of misclassified instances. Finally, future efforts will also focus on employing model compression strategies such as pruning, quantization, and knowledge distillation to reduce memory usage and inference time, ensuring the practical deployment feasibility of the proposed models on resource-constrained IoT devices.

Abbreviations

IoT	Internet of things
IDS	Intrusion detection systems
ML	Machine learning
DL	Deep learning
AI	Artificial intelligence
CNN	Convolutional neural network
RNN	Reccurent neural network
LSTM	Long-short-term memory
GRU	Gated recurrent unit
FAR	False alarm rate
TPR	True positive rate
FPR	False positive rate
ROC	Receiver operating characteristic
AUC	Area under curve

Author contributions

RJ developed the concept and implementation of the method, performed the experiments and conducted the analysis, as well as writing the manuscript. NL provided supervision, reviewed and corrected the final manuscript. OC and MH reviewed and proposed enhancements for the study.

Funding

This research was funded by Princess Nourah bint Abdulrahman University Researchers Supporting Project number (PNURSP2025R125), Princess Nourah bint Abdulrahman University, Riyadh, Saudi Arabia.

Availability of data and materials

The datasets used in this study are publicly available and links to them can be found in the references section of this article.

Declarations

Ethics approval and consent to participate

Not applicable.

Consent for publication

Not applicable.

Competing interests
The authors declare no competing interests.

Received: 4 February 2025 Accepted: 4 June 2025
Published online: 27 August 2025

References

1. I.H. Sarker, A. Kayes, S. Badsha, H. Alqahtani, P. Watters, A. Ng, Cybersecurity data science: an overview from machine learning perspective. J. Big data **7**, 1–29 (2020)
2. J. Prümmer, T. Steen, B. Berg, A systematic review of current cybersecurity training methods. Comput. Security **136**, 103585 (2024)
3. Cybersecurity Ventures: Hackerpocalypse: A Cybercrime Revelation. Available at: https://cybersecurityventures.com/hackerpocalypse-cybercrime-report-2016/. Accessed 29 Apr 2025 (2016)
4. P.P. Mukkamala, S. Rajendran, A survey on the different firewall technologies. Int. J. Eng. Appl. Sci. Technol. **5**(1), 363–365 (2020)
5. R. Hazra, P. Chatterjee, Y. Singh, G. Podder, T. Das, Data encryption and secure communication protocols. In: Strategies for E-Commerce Data Security: Cloud, Blockchain, AI, and Machine Learning, pp. 546–570. IGI Global (2024)
6. A. Pinto, L.-C. Herrera, Y. Donoso, J.A. Gutierrez, Survey on intrusion detection systems based on machine learning techniques for the protection of critical infrastructure. Sensors **23**(5), 2415 (2023)
7. A. Awajan, A novel deep learning-based intrusion detection system for iot networks. Computers **12**(2), 34 (2023)
8. M. Gheisari, F. Ebrahimzadeh, M. Rahimi, M. Moazzamigodarzi, Y. Liu, P.K. Dutta Pramanik, M.A. Heravi, A. Mehbodniya, M. Ghaderzadeh, M.R. Feylizadeh et al., Deep learning: applications, architectures, models, tools, and frameworks: a comprehensive survey. CAAI Trans. Intell. Technol. **8**(3), 581–606 (2023)
9. Y. Imrana, Y. Xiang, L. Ali, A. Noor, K. Sarpong, M.A. Abdullah, Cnn-gru-ff: a double-layer feature fusion-based network intrusion detection system using convolutional neural network and gated recurrent units. Complex Intell. Syst. 1–18 (2024)
10. A. Meliboev, J. Alikhanov, W. Kim, Performance evaluation of deep learning based network intrusion detection system across multiple balanced and imbalanced datasets. Electronics **11**(4), 515 (2022)
11. D. Bhatt, C. Patel, H. Talsania, J. Patel, R. Vaghela, S. Pandya, K. Modi, H. Ghayvat, Cnn variants for computer vision: history, architecture, application, challenges and future scope. Electronics **10**(20), 2470 (2021)
12. F.M. Shiri, T. Perumal, N. Mustapha, R. Mohamed, A comprehensive overview and comparative analysis on deep learning models: Cnn, rnn, lstm, gru. arXiv:abs/2305.17473 (2023)
13. A. Henry, S. Gautam, S. Khanna, K. Rabie, T. Shongwe, P. Bhattacharya, B. Sharma, S. Chowdhury, Composition of hybrid deep learning model and feature optimization for intrusion detection system. Sensors **23**(2), 890 (2023)
14. M. Sarhan, S. Layeghy, N. Moustafa, M. Portmann, Netflow datasets for machine learning-based network intrusion detection systems. In: Big Data Technologies and Applications: 10th EAI International Conference, BDTA 2020, and 13th EAI International Conference on Wireless Internet, WiCON 2020, Virtual Event, December 11, 2020, Proceedings 10, pp. 117–135 (2021). Springer
15. N. Moustafa, J. Slay, Unsw-nb15: a comprehensive data set for network intrusion detection systems (unsw-nb15 network data set). In: 2015 Military Communications and Information Systems Conference (MilCIS), pp. 1–6 (2015). IEEE
16. I. Sharafaldin, A.H. Lashkari, A.A. Ghorbani et al., Toward generating a new intrusion detection dataset and intrusion traffic characterization. ICISSp **1**, 108–116 (2018)
17. B. Li, J. Springer, G. Bebis, M.H. Gunes, A survey of network flow applications. J. Netw. Comput. Appl. **36**(2), 567–581 (2013)
18. M. Vishwakarma, N. Kesswani, Dids: a deep neural network based real-time intrusion detection system for iot. Decision Anal. J. **5**, 100142 (2022)
19. W.W. Lo, S. Layeghy, M. Sarhan, M. Gallagher, M. Portmann, E-graphsage: A graph neural network based intrusion detection system for iot. In: NOMS 2022-2022 IEEE/IFIP Network Operations and Management Symposium, pp. 1–9 (2022). IEEE
20. D. Krishnan, P. Shrinath, Robust botnet detection approach for known and unknown attacks in iot networks using stacked multi-classifier and adaptive thresholding. Arabian J. Sci. Eng. 1–17 (2024)
21. B. Cao, C. Li, Y. Song, Y. Qin, C. Chen, Network intrusion detection model based on cnn and gru. Appl. Sci. **12**(9), 4184 (2022)
22. N.B. Singh, M.M. Singh, A. Sarkar, J.K. Mandal, A novel wide & deep transfer learning stacked gru framework for network intrusion detection. J. Inform. Security Appl. **61**, 102899 (2021)
23. E. Rodríguez, P. Valls, B. Otero, J.J. Costa, J. Verdú, M.A. Pajuelo, R. Canal, Transfer-learning-based intrusion detection framework in iot networks. Sensors **22**(15), 5621 (2022)
24. R. Jablaoui, N. Liouane, Efficient rnn models for iot intrusion detection system. In: 2024 International Conference on Control, Automation and Diagnosis (ICCAD), pp. 1–6 (2024). IEEE
25. R. Jablaoui, N. Liouane, An effective deep cnn-lstm based intrusion detection system for network security. In: 2024 International Conference on Control, Automation and Diagnosis (ICCAD), pp. 1–6 (2024). IEEE
26. S. Abbas, S. Alsubai, S. Ojo, G.A. Sampedro, A. Almadhor, A.A. Hejaili, I. Bouazzi, An efficient deep recurrent neural network for detection of cyberattacks in realistic iot environment. J. Supercomput. **80**(10), 13557–13575 (2024)
27. Y. Zhang, R.C. Muniyandi, F. Qamar, A review of deep learning applications in intrusion detection systems: overcoming challenges in spatiotemporal feature extraction and data imbalance. Appl. Sci. **15**(3), 1552 (2025)
28. R. Jablaoui, N. Liouane, Network security based combined cnn-rnn models for iot intrusion detection system. Peer-to-Peer Network. Appl. **18**(3), 129 (2025)

29. S.M. Kasongo, Y. Sun, A deep gated recurrent unit based model for wireless intrusion detection system. ICT Exp. **7**(1), 81–87 (2021)
30. D. Bhatt, C. Patel, H. Talsania, J. Patel, R. Vaghela, S. Pandya, K. Modi, H. Ghayvat, Cnn variants for computer vision: history, architecture, application, challenges and future scope. Electronics **10**(20), 2470 (2021)
31. M. Ghurab, G. Gaphari, F. Alshami, R. Alshamy, S. Othman, A detailed analysis of benchmark datasets for network intrusion detection system. Asian J. Res. Comput. Sci. **7**(4), 14–33 (2021)
32. S. Hajj, R. El Sibai, J. Bou Abdo, J. Demerjian, A. Makhoul, C. Guyeux, Anomaly-based intrusion detection systems: the requirements, methods, measurements, and datasets. Trans. Emerging Telecommun. Technol. **32**(4), 4240 (2021)
33. P.-O. Côté, A. Nikanjam, N. Ahmed, D. Humeniuk, F. Khomh, Data cleaning and machine learning: a systematic literature review. Autom. Softw. Eng. **31**(2), 54 (2024)
34. G. Canbek, T. Taskaya Temizel, S. Sagiroglu, Benchmetrics: a systematic benchmarking method for binary classification performance metrics. Neural Comput. Appl. **33**(21), 14623–14650 (2021)
35. R.-Y. Sun, Optimization for deep learning: an overview. J. Operat. Res. Soc. China **8**(2), 249–294 (2020)
36. R.M. Schmidt, F. Schneider, P. Hennig, Descending through a crowded valley-benchmarking deep learning optimizers. In: International Conference on Machine Learning, pp. 9367–9376 (2021). PMLR
37. T. Tieleman, Lecture 6.5-rmsprop: divide the gradient by a running average of its recent magnitude. COURSERA: Neural Networks Mach. Learn. **4**(2), 26 (2012)
38. S.-I. Amari, Backpropagation and stochastic gradient descent method. Neurocomputing **5**(4–5), 185–196 (1993)
39. D.P. Kingma, J. Ba, Adam: A method for stochastic optimization. arXiv:abs/1412.6980 (2014)
40. H. Iiduka, Appropriate learning rates of adaptive learning rate optimization algorithms for training deep neural networks. IEEE Trans. Cybernetics **52**(12), 13250–13261 (2021)
41. U.M. Khaire, R. Dhanalakshmi, High-dimensional microarray dataset classification using an improved adam optimizer (iadam). J. Ambient. Intell. Humaniz. Comput. **11**(11), 5187–5204 (2020)
42. T. Szandała, Review and comparison of commonly used activation functions for deep neural networks. Bio-inspired neurocomputing 203–224 (2021)
43. A. Devarakonda, M. Naumov, M. Garland, Adabatch: Adaptive batch sizes for training deep neural networks. arXiv:abs/1712.02029 (2017)
44. M. Vishwakarma, N. Kesswani, A transfer learning based intrusion detection system for internet of things (2023)
45. R. Xu, G. Wu, W. Wang, X. Gao, A. He, Z. Zhang, Applying self-supervised learning to network intrusion detection for network flows with graph neural network. Comput. Netw. **248**, 110495 (2024)

Publisher's Note

Springer Nature remains neutral with regard to jurisdictional claims in published maps and institutional affiliations.