OFFICE OF THE SECRETARY OF DEFENSE
1700 DEFENSE PENTAGON
WASHINGTON, DC 20301-1700

OPERATIONAL TEST
AND EVALUATION

AUG 0 9 2018

MEMORANDUM FOR ASSISTANT DEPUTY UNDER SECRETARY OF THE ARMY FOR TEST AND EVALUATION

SUBJECT: Approval of the Test and Evaluation Master Plan for the Integrated Personnel and Pay System – Army Increment 2

I have reviewed and approve the attached Integrated Personnel and Pay System - Army (IPPS-A) Test and Evaluation Master Plan version 1.0, dated September 12, 2017 with a revision date of 13 July 2018.

Please inform my office as soon as funding is made available for future releases of IPPS-A Increment 2; i.e. Releases 3, 4, and 5 and work with my office as you develop the Operational Test and Evaluation Plan and any needed appendices for future releases.

My point of contact is Mr. Gary Wilhelm. He may be reached at (571) 372-3835 or gary.l.wilhelm.civ@mail.mil.

for Robert F. Behler
Director

Attachment:
As stated

cc:
PEO EIS
IPPS-A PMO

OFFICE OF THE ASSISTANT SECRETARY OF DEFENSE
3030 DEFENSE PENTAGON
WASHINGTON, DC 20301-3030

RESEARCH
AND ENGINEERING

DEC 04 2017

MEMORANDUM FOR ASSISTANT DEPUTY UNDER SECRETARY OF THE ARMY FOR TEST AND EVALUATION

SUBJECT: Approval of the Developmental Test and Evaluation Plan within the Integrated Personnel and Pay System–Army Test and Evaluation Master Plan

I have reviewed and approve the developmental test and evaluation plan within the Integrated Personnel and Pay System–Army Test and Evaluation Master Plan Update, dated September 12, 2017. My point of contact is Mr. Chris DeLuca at 571-372-4171 or ralph.c.deluca.civ@mail.mil.

J. Brian Hall 12/4/2017

Dr. J. Brian Hall
Acting Deputy Assistant Secretary of Defense for
Developmental Test and Evaluation

cc:
DOT&E
PEO-EIS
PM IPPS-A

DEPARTMENT OF THE ARMY
OFFICE OF THE DEPUTY UNDER SECRETARY OF THE ARMY
102 ARMY PENTAGON
WASHINGTON, DC 20310-0102

DUSA-TE 17 November 2017

MEMORANDUM FOR

Deputy Assistant Secretary of Defense for Developmental Test and Evaluation, 3040 Defense Pentagon, Room 5A1076, Washington, DC 20301-3040
Director, Operational Test and Evaluation, 1700 Defense Pentagon, Room 3E1088, Washington DC 20301-1700

SUBJECT: Integrated Personnel and Pay System Inc.2 (IPPS-A Inc. 2) Test and Evaluation Master Plan (TEMP)

1. I approve the IPPS-A Inc. 2 TEMP submitted by the Program Manager Office and forward to Office of the Secretary of Defense for approval.

2. Upon approval, please return a copy of the TEMP approval memorandum to this office. My point of contact is Ms. Michell Venters, michell.h.venters.civ@mail.mil, (703) 545-1094.

JIMENEZ.DAVID.1228753455

Digitally signed by JIMENEZ.DAVID.1228753455
DN: c=US, o=U.S. Government, ou=DoD, ou=PKI, ou=USA, cn=JIMENEZ.DAVID.1228753455
Date: 2017.11.20 09:54:57 -05'00'

Encl

DAVID JIMENEZ
Director, Army Test and Evaluation

CF:
Commander, US Army Test and Evaluation Command (ATEC)
Commander, US Army Capabilities Integration Center (ARCIC)
Program Executive Office, Enterprise Information Systems (EIS)

U.S. ARMY

Integrated Personnel and Pay System – Army (IPPS-A)

Acquisition Category (ACAT) IAM Major Automated Information System (MAIS)

IPPS-A Increment II Post-Milestone B Test and Evaluation Master Plan

Version 1.0
12 September 2017

Department of the Army
Program Executive Office Enterprise Information Systems
Integrated Personnel and Pay System - Army Project Management Office
2521 South Clark Street
Arlington, VA 22202

Signature Page
Integrated Personnel and Pay System – Army
Increment II Post-Milestone B Test and Evaluation Master Plan

SUBMITTED BY:
I recommend approval of the IPPS-A Increment II Post-Milestone B TEMP

JAMES F. McNULTY
COL, FA
Project Manager

9/22/2017
Date

CONCURRENCE:

GREGORY S. JOHNSON
COL, AG
Chief, Functional Management Division

9/22/17
Date

PATRICK W. BURDEN
Brigadier General, USA
Program Executive Officer
Enterprise Information Systems

10/27/17
Date

MIELE.ROBERT.M.1229226416
Digitally signed by MIELE.ROBERT.M.1229226416
DN: c=US, o=U.S. Government, ou=DoD, ou=PKI, ou=USA, cn=MIELE.ROBERT.M.1229226416
Date: 2017.11.15 14:24:34 -05'00'

for JOHN W. CHARLTON
Major General, USA
Commander, US Army Test & Evaluation Command

15 November 2017
Date

ARMY APPROVAL

JIMENEZ.DAVID.1228753455

Digitally signed by JIMENEZ.DAVID.1228753455
DN: c=US, o=U.S. Government, ou=DoD, ou=PKI, ou=USA, cn=JIMENEZ.DAVID.1228753455
Date: 2017.11.20 10:01:22 -05'00'

DAVID JIMENEZ
Assistant Deputy Under Secretary of the Army,
Test and Evaluation

Date

OSD APPROVAL

J. Brian Hall

DR. J. BRIAN HALL
Acting Deputy Assistant Secretary of Defense
for Developmental Test and Evaluation

12/4/2017
Date

for

ROBERT F. BEHLER
Director, Operational Test and Evaluation

8-9-18
Date

Revision History

Version Number	Date	Summary of Changes
1.0	12 September 2017	Draft Post-MS B TEMP submitted.
1.0	13 July 2018	Added extract of the PB19 TE Report to section 4.5

Table Of Contents

1 PART I - INTRODUCTION ... 1
1.1 Purpose ... 1
1.2 IPPS-A Mission Description ... 1
1.2.1 Mission Overview ... 1
1.2.2 Concept of Operations ... 3
1.2.3 Operational Users ... 3
1.2.3.1 Human Resources Professionals ... 3
1.2.3.2 Regular Army, Army National Guard, and Army Reserve Soldiers ... 3
1.2.3.3 Leaders ... 4
1.3 System Description ... 4
1.3.1 Program Background ... 6
1.3.2 Key Interfaces ... 7
1.3.3 Key Capabilities ... 8
1.3.3.1 High Level Objectives ... 8
1.3.3.2 Business Outcomes ... 8
1.3.3.3 Program Outcomes ... 9
1.3.3.4 Critical Technical Parameters ... 9
1.3.3.5 Critical Developmental Issues ... 9
1.3.4 System Threat Assessment ... 18
1.3.4.1 System Specific Threats to IPPS-A ... 18
1.3.4.2 Operational Threat Environment ... 18
1.3.5 Systems Engineering (SE) Requirements ... 19
1.3.6 Special Test or Certification Requirements ... 19
1.3.6.1 Human Systems Integration ... 19
1.3.6.2 Joint Interoperability Certification ... 20
1.3.6.3 Army Interoperability Certification ... 20
1.3.6.4 Cybersecurity ... 20
1.3.6.5 Financial Improvement and Audit Readiness ... 20
1.3.7 Previous Testing ... 22
2 PART II - TEST PROGRAM MANAGEMENT AND SCHEDULE ... 22
2.1 Test and Evaluation Management ... 22
2.1.1 T&E Organizational Construct ... 24
2.2 Common T&E Database Requirements ... 25
2.3 Deficiency Reporting ... 26
2.4 TEMP Updates ... 26
2.5 Integrated Test Program Schedule ... 26
2.5.1 Schedule Concurrency Risk Mitigation ... 26
2.5.1.1 Limited Pay Demonstration ... 27
3 PART III - TEST AND EVALUATION STRATEGY ... 28
3.1 T&E Strategy ... 28
3.1.1 Decision Support Key ... 30
3.2 Developmental Evaluation Approach ... 31

3.2.1 Developmental Evaluation Framework ... 32
3.2.2 Test Methodology ... 48
3.2.3 Modeling & Simulation ... 52
3.2.3.1 Interoperability ... 52
3.2.3.2 Performance ... 53
3.2.3.3 Reliability ... 53
3.2.3.4 Cybersecurity ... 53
3.2.4 Test Limitations and Risks ... 53
3.3 Developmental Test Approach ... 53
3.3.1 Mission-Oriented Approach ... 55
3.3.2 Developmental Test Events and Objectives ... 55
3.3.2.1 Developmental Test Events Common Entrance and Exit Criteria ... 56
3.3.2.2 Product Level Test ... 57
3.3.2.3 Developer Integration Test ... 58
3.3.2.4 Capability Acceptance Test ... 58
3.3.2.5 System Integration Test ... 59
3.3.2.6 Software Qualification Test ... 59
3.3.2.7 System Acceptance Test ... 59
3.3.2.8 Reliability Tracking ... 60
3.3.2.9 Cybersecurity DT&E ... 60
3.3.2.10 Operational Test Segments (OTS) ... 60
3.4 Certification for Limited User Test and Initial Operational Test ... 60
3.5 Operational Evaluation Approach ... 62
3.5.1 Operational Test Events and Objectives ... 64
3.5.1.1 Pilot Test ... 64
3.5.1.2 Record Test ... 64
3.5.1.3 Cybersecurity OT&E ... 65
3.5.1.4 Financial Standards Compliance Assessment (FSCA) ... 65
3.5.2 Operational Evaluation Framework ... 66
3.5.3 Test Methodology ... 69
3.5.4 Modeling & Simulation ... 75
3.5.5 Test Limitations ... 75
3.6 Live Fire Test and Evaluation Approach ... 76
3.7 Other Certifications ... 76
3.8 Future Test and Evaluation ... 76
4 PART IV - RESOURCE SUMMARY ... 76
4.1 Introduction ... 76
4.2 Test Resource Summary ... 76
4.2.1 Test Articles ... 76
4.2.1.1 Increment II Production Environment ... 77
4.2.1.2 IPPS-A Increment II Test Environments ... 78
4.2.1.3 Interfacing Systems Test Environments ... 78
4.2.2 Test Sites ... 78
4.2.3 Test Instrumentation ... 79
4.2.4 Test Support Equipment ... 79

4.2.5 Threat Representation 80
4.2.6 Test Targets and Expendables 80
4.2.7 Operational Force Test Support 80
4.2.8 Models, Simulations, and Test beds 81
4.2.9 Joint Operational Test Environment 81
4.3 Federal, State, and Local Requirements 81
4.4 Manpower/Personnel and Training 81
4.5 Test Funding 81
APPENDIX A BIBLIOGRAPHY A-1
APPENDIX B ACRONYMS AND ABBREVIATIONS B-1
APPENDIX C POINTS OF CONTACT C-1
APPENDIX D SCIENTIFIC TEST AND ANALYSIS TECHNIQUES D-1
APPENDIX E CYBERSECURITY E-1
APPENDIX F RELIABILITY F-1
5 INTRODUCTION 5-2
5.1 Purpose 5-2
5.2 Scope 5-2
5.3 Release 2 Updates 5-2
5.4 Release 2 Capabilities 5-2
5.5 Release 2.0 Test Schedule 5-2
5.6 Release 2.0 Test and Evaluation Funding 5-3
5.7 Deployment Risk Reduction Event (RRE) 5-4
5.8 Release 2 Developmental Evaluation Framework 5-4
5.9 Release 2 Mission Critical Pay Impacting Interfaces 5-19
6 INTRODUCTION 6-2
6.1 Purpose 6-2
6.2 Scope 6-2
6.3 Release 3 Updates 6-2
6.4 Release 3 Capabilities 6-2
6.5 Release 3 Test Schedule 6-7
6.6 Release 3 Test and Evaluation Funding 6-7
6.7 Release 3 Developmental Evaluation Framework 6-7
6.8 Release 3 Mission Critical Pay Impacting Interfaces 6-22
7 INTRODUCTION 7-2
7.1 Purpose 7-2
7.2 Scope 7-2
7.3 Release 4 Updates 7-2
7.4 Release 4 Capabilities 7-2
7.5 Release 4 Test Schedule 7-4
7.6 Release 4 Test and Evaluation Funding 7-4
7.7 Release 4 Developmental Evaluation Framework 7-4
7.8 Release 4 Mission Critical Pay Impacting Interfaces 7-20
8 INTRODUCTION 8-2
8.1 Purpose 8-2
8.2 Scope 8-2

8.3 Release 5 Updates 8-2
8.4 Release 5 Capabilities 8-2
8.5 Release 5 Test Schedule 8-2
8.6 Release 5 Test and Evaluation Funding 8-2
8.7 Release 5 Developmental Evaluation Framework 8-3
8.8 Release 5 Mission Critical Pay Impacting Interfaces 8-19

List Of Figures

Figure 1-1: IPPS-A High-Level Operational Concept (OV-1) 2
Figure 1-2: IPPS- A Infrastructure Designs with Enclaves/Environments/Applications 5
Figure 1-3: SOA/ESB Integration Overview Diagram for Increment II 8
Figure 2-1: Trigger Validation Process 28
Figure 3-1: IPPS-A Integrated T&E Strategy 29
Figure 3-2: IPPS-A Increment II Test Inputs and Outputs 30
Figure 4-1: IPPS-A Test Environment Applications 77
Figure 4-2: IPPS-A Test Environment Usage 77
Figure 5-1: IPPS-A Increment II Release 2.0 Integrated Program Test Schedule 5-3
Figure 6-1: IPPS-A Increment II Release 3 Integrated Program Test Schedule 6-7
Figure 7-1: IPPS-A Increment II Release 4 Integrated Program Test Schedule 7-4
Figure 8-1: IPPS-A Increment II Release 5 Integrated Program Test Schedule 8-2

List Of Tables

Table 1-1: Critical Technical Parameters and Measurement Criteria 10
Table 1-2: Critical Developmental Issues and Measurement Criteria 13
Table 3-1: Decision Support Key 31
Table 3-2: IPPS-A Milestone C Developmental Evaluation Framework 33
Table 3-3: Developmental Test Methodology Matrix 48
Table 3-4: LUT and IOT Entrance Criteria 61
Table 3-5: Operational Evaluation Framework 67
Table 3-6: System Evaluation Plan Data Source Matrix 69
Table 4-1: Test Sites 78
Table 4-2: Operational Force Test Support 80
Table 4-3: Inc II T&E Funding Requirements 82

Table 5-1: Legacy Systems Subsumed by IPPS-A Release 2 5-2
Table 5-2: IPPS-A Release 2.0 Test Funding Summary 5-3
Table 5-3: Developmental Evaluation Framework for Release 2 5-5
Table 5-4: Mission Critical Pay Impacting Interfaces for Release 2 5-19
Table 6-1: Legacy Systems Subsumed by IPPS-A Release 3 6-2
Table 6-2: IPPS-A Release 3 Test Funding Summary 6-7
Table 6-3: Developmental Evaluation Framework for Release 3 6-8
Table 6-4: Mission Critical Pay Impacting Interfaces for Release 3* 6-22
Table 7-1: Legacy Systems Subsumed by IPPS-A Release 4 7-2
Table 7-2: IPPS-A Release 4 Test Funding Summary 7-4
Table 7-3: Developmental Evaluation Framework for Release 4 7-5
Table 7-4: Mission Critical Interfaces for Release 4* 7-20
Table 8-1: Legacy Systems Subsumed by IPPS-A Release 5 8-2
Table 8-2: IPPS-A Release 5 Test Funding Summary 8-2
Table 8-3: Developmental Evaluation Framework for Release 5 8-4
Table 8-4: Mission Critical Interfaces for Release 5* 8-19

1 PART I - INTRODUCTION

1.1 Purpose

This Integrated Personnel and Pay System-Army (IPPS-A) Increment II Test and Evaluation Master Plan (TEMP) for Increment II Post-Milestone (MS) B describes the total Test and Evaluation (T&E) planning from system development through operational T&E for all four releases. This includes the required type and quantity of T&E events for each release, along with their resource requirements.

This is an update to the IPPS-A Increment II MS B TEMP, approved 5 May 2015. This document is composed of the main document that describes those elements of the TEMP that are universal for the four Releases of Increment II along with four Annexes that contain release specific updates and data including release specific updates to the TEMP, test schedules, mission critical pay impacting interfaces. Annexes 1 through 4 contain the release specific updates and data for Releases 2 through 5 respectively. Appendices D through F contains the updates to the Scientific Test and Analysis Techniques, Cybersecurity, and Reliability areas.

This document, once approved, will be used to support IPPS-A Increment II Limited Fielding Decisions and the subsequent MS C Decision.

IPPS-A is an Acquisition Category (ACAT) IAM Major Automated Information System (MAIS) Program and is listed on the Office of the Secretary of Defense (OSD) T&E Oversight List.

All references in this document are listed in APPENDIX A .

1.2 IPPS-A Mission Description

1.2.1 Mission Overview

The approved IPPS-A Increment II Business Case, v1.0, December 2014 concluded the Army currently has numerous issues related to improper and inaccurate military personnel and pay processing activities. These issues are a result of disparate component-unique processes and non-integrated systems utilized across all Army Components (Regular Army (RA), Army National Guard (ARNG), and United States Army Reserve (USAR)) to manage Human Resources (HR) and pay activities. The Army seeks to resolve these critical personnel and pay processing problems through an aggressive Business Process Re-engineering (BPR) effort and the implementation of an integrated Enterprise Resource Planning (ERP) system, IPPS-A.

The vision for IPPS-A is to deploy a fully functioning integrated personnel and pay system for all Army Components to include sensitive activities. The currently planned subsumption of 35 full and 10 partial systems results in a more synergistic HR operating environment supported by quality controlled, single data entry which allows for an authoritative, comprehensive personnel and pay record for each Soldier. A high priority for IPPS-A is to provide timely, accurate, and easily understood functional information for Soldiers, commanders in the field, and Component headquarters. The system is designed to be intuitive and incorporate business rules to ensure the user is not required to make policy interpretations unless there is an exception to policy based on circumstances. An overarching goal of IPPS-A is to support all Army Components with personnel and pay information for individuals and units. This allows commanders of these units to have the ability to access personnel information on all members assigned to their units

regardless of Component. Additionally, the system will comply with all statutory requirements governing internal controls and audit readiness while adhering to the Office of Management and Budget (OMB) and DoD regulations that guide these oversight requirements. IPPS-A is critically important to improving the Army's financial management processes in support of military personnel and pay. This includes IPPS-A contribution to a successful audit program within the Army. The system must be robust enough to meet changing operational concepts and requirements down to the individual level for mobilization, activation, contingency operations, and assignment actions.

Figure 1-1 is the High Level Operational Concept Description (operational view (OV)-1), which graphically represents the concept for IPPS-A. The OV-1 is one of 26 Department of Defense Architecture Framework (DoDAF) products that organizations build when developing system architecture artifacts. The puzzle pieces at the bottom of the picture represent the primary stakeholders. All of the Army Components are projected to have the new system as their personnel and pay system of record. The depiction of the enterprise and technology behind the system functions (blue bubbles) illustrates the Army's global personnel and pay operations as supported by the new system. The cog and wheel at the center shows how integrated HR management and pay are central to the system functionality which includes the solutions that the new system offers the Army Components and individual Soldiers throughout their career. The blue bubbles highlight the functions within the Army HR life cycles that the system will support. The orange bubbles outside of the Army HR life cycle ring highlight the benefits the new system is intended to provide to the Army.

Figure 1-1: IPPS-A High-Level Operational Concept (OV-1)

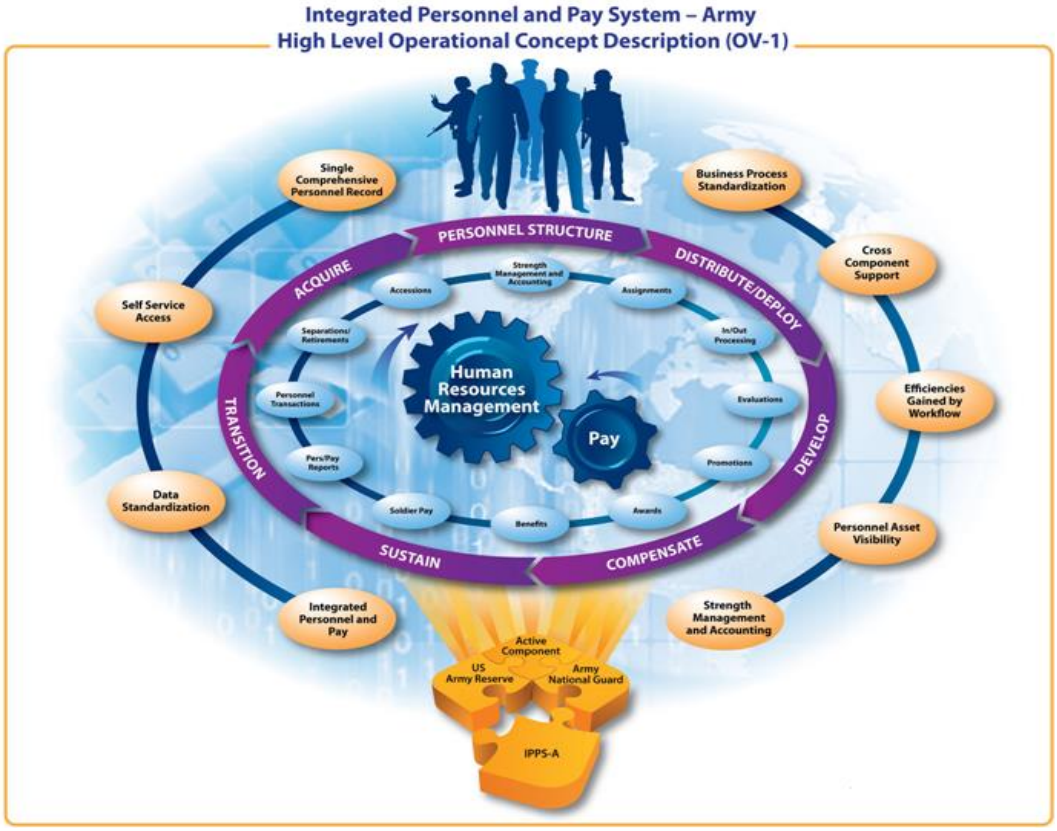

1.2.2 Concept of Operations

The Concept of Operations (CONOPS) from the IPPS-A Increment II Business Case, v1.0, December 2014 follows. IPPS-A is intended to be the Army's solution to the capability gap for integrated personnel and pay management. For the Army to meet appropriate legislative mandates, the new capability should provide improved functionality in the following personnel and pay functional areas: Soldier pay, personnel and pay reporting, pay events triggered by personnel transactions, separations and retirements, strength reporting, assignments, in and out processing, evaluations, promotions, awards, and benefits. IPPS-A capabilities will support the Regular Army (RA), Army National Guard (ARNG), and the Army Reserve (USAR)

In accordance with the approved IPPS-A Increment II Business Case, the following specific mission needs are identified:

- Integrated Comprehensive Personnel Record;
- Self Service Access;
- Data Standardization;
- Integrated Personnel and Pay;
- Strength Management and Accounting;
- Personnel Asset Visibility;
- Efficiencies Gained by Workflow; Cross Component Support;
- Business Process Standardization;
- Resides on Non-Secure Internet Protocol Router Network (NIPRNET) and Secret Internet Protocol Router Network (SIPRNet).

1.2.3 Operational Users

1.2.3.1 Human Resources Professionals

IPPS-A will provide HR Professionals a one-stop-shop for timely and accurate personnel and pay data and information. The system will replace more than 40 HR systems when it is completely fielded, eliminating manual data entry into multiple systems and increasing data accuracy. IPPS-A will provide integrated personnel and pay capabilities in a single system to all Components for the first time ever. In addition, the system will electronically streamline HR processes and automate personnel actions to reduce manual workarounds and workloads. IPPS-A's capabilities will make HR Professionals' jobs more efficient and effective. The training provided to HR professionals will be a combination of distance learning and instructor led.

1.2.3.2 Regular Army, Army National Guard, and Army Reserve Soldiers

All Soldiers, regardless of their Component, will have web-based access to their individual personnel and pay record via IPPS-A. This access will allow Soldiers to view their personal record from any common access card (CAC)-enabled computer in the world. IPPS-A will also enable Soldiers to submit personal information changes to HR Professionals for review and approval, 24 hours a day. IPPS-A's ability to update information in near real-time will allow Soldiers to view accurate, correct, and up-to-date personal information. Ultimately, IPPS-A capabilities will help ensure Soldiers are paid on time and accurately.

IPPS-A's multi-Component capabilities will streamline mobilization and demobilization transitions between Components. This capability will ultimately save Soldiers and Commanders time as they transition between assignments. All Soldiers will be provided with distance learning via internet-based training courses in order to maximize their use of the employee self-service capability of the system.

1.2.3.3 Leaders

IPPS-A will provide Leaders access to their assigned Soldiers' personnel and pay information, regardless of their Component. With greater visibility, Leaders will be empowered with accurate information to better manage their assigned Soldiers. For example, IPPS-A's first release provided Leaders with access to their personnel's Soldier Record Brief (SRB), a centralized and comprehensive report that will eventually replace the Enlisted and Officer Record Briefs for all Components. Future releases of IPPS-A will provide Leaders with the ability to approve personnel actions via IPPS-A's Web portal. This capability will help reduce the time Leaders need to manage administrative personnel actions and empower them to focus on other missions. All Leaders will be provided with distance learning in order to maximize their use of the manager self-service capability of the system.

1.3 System Description

The overall goal of IPPS-A is to support the Soldier in the core mission of conducting operations; to promote and maintain effective military personnel management; and to ensure that accurate and timely military personnel data, including delivery of benefits, are available at all levels of management and oversight. To resolve the most critical problems, the program will have to integrate Regular Army (RA), Army National Guard (ARNG), and United States Army Reserve (USAR) databases; integrate personnel and pay functionality; streamline and improve automated support to the mobilization and deployment processes; and implement standard data that reflect the core requirements of the Combatant Command (COCOM), the Department of the Army (DA), Office of the Secretary of Defense (OSD), and other Federal agencies.

IPPS-A will provide the Army with an integrated, multi-component, personnel and pay system which streamlines Army Human Resources (HR), enhances the efficiency and accuracy of Army personnel and pay procedures, and supports Soldiers and their families. IPPS-A will be a web-based tool, available 24 hours a day, accessible to Soldiers, HR professionals, COCOMs, personnel and pay managers, and other authorized users throughout the Army. IPPS-A addresses major deficiencies in the delivery of military personnel and pay services and also provides internal controls and audit procedures that prevent erroneous payments and loss of funds.

IPPS-A will be a major Army business system and is one of the Army Enterprise Resource Planning (ERP) software implementation programs currently underway in the Army. As such, IPPS-A is compliant with the Army ERP Strategy and falls under the oversight of the Army Business Council. IPPS-A will be an Army-specific system developed in compliance with the Department of Defense (DoD) Business Enterprise Architecture and federal, DoD and Army Information Technology (IT) standards. IPPS-A will meet enterprise information requirements through interface with a DoD Enterprise Information Web (EIW) developed and managed by the OSD Deputy Chief Management Office (DCMO), and will be compliant with Common Human

Resources Information Standards and other information standards established by the Defense Integrated Military Human Resources System (DIMHRS) Transition Council.

The Army will employ a hybrid solution using ERP software and Agile Development to deliver integrated personnel and pay capabilities, capitalizing on the PeopleSoft product delivered by the Business Transformation Agency (BTA) as part of the DIMHRS program. The Army plans to use current Army upgraded PeopleSoft 9.2 ERP and Oracle 11g database capabilities, along with Application Technologies outside of the core ERP to meet user requirements. The Program Office will look at opportunities where Software as a Service and Platform as a Service could be used to meet user requirements in future releases. This hybrid approach will allow the Army to provide faster delivery of incremental capabilities without changing the core ERP system; satisfy Army ERP Strategy requirements; and meet federal cloud computing strategy timelines. In addition to allowing the program to use the proven integration of personnel and pay in an ERP platform, this approach provides the Army with the flexibility to consider the use of other Application Technologies to support the activities and processes that don't specifically align with the ERP solution. This provides maximum options for delivering capabilities and makes the best use of all available tools. Further detail can be found in the IPPS-A Technical Architecture Drawings.

Figure 1-2 below presents the Infrastructure High-Level Design which includes the enclaves, environments and applications. Further detail can be found in the IPPS-A Technical Architecture Drawings.

Figure 1-2: IPPS- A Infrastructure Designs with Enclaves/Environments/Applications

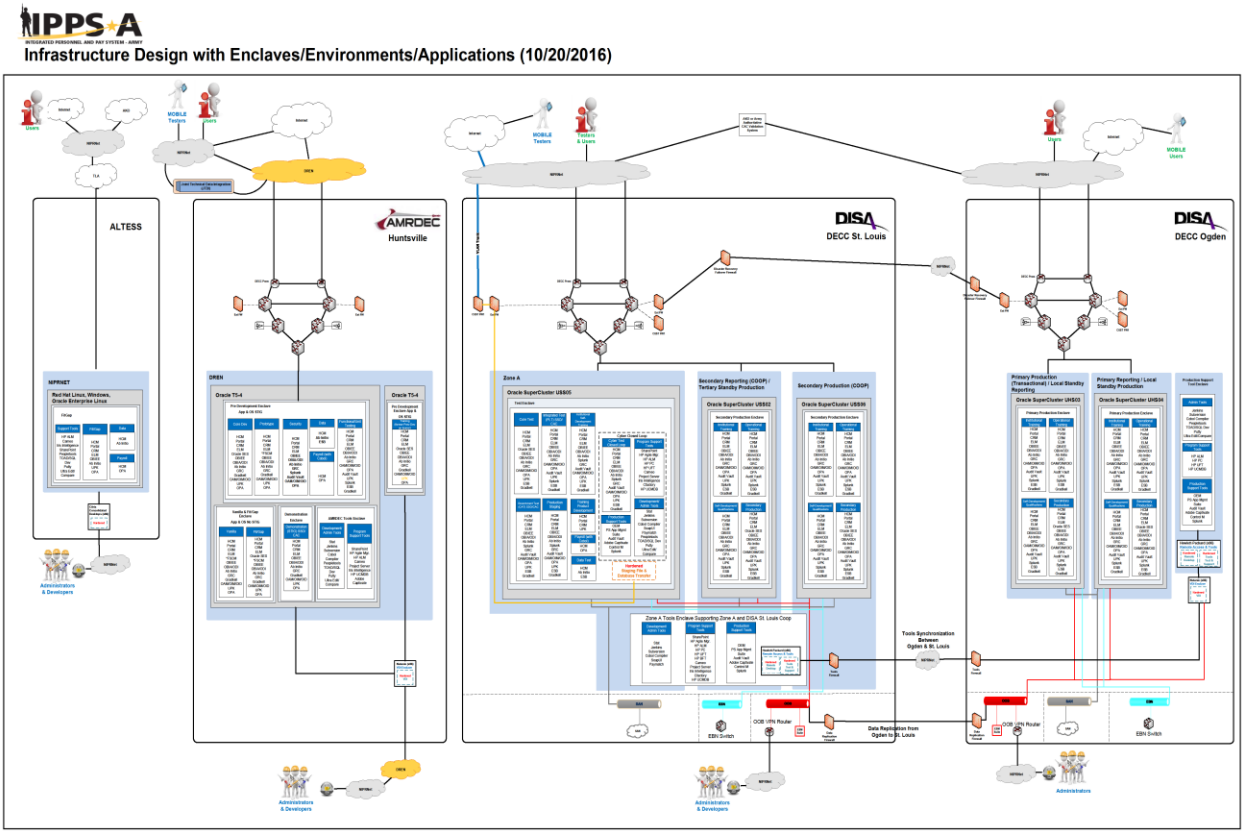

1.3.1 Program Background

The initiative to develop an integrated personnel and pay solution for the Army from the Operational Requirements Document (ORD) dated November 18, 2008, which validated the Mission Needs Statement (MNS) and documented the original integrated personnel and pay system requirements. During this time, requirements were to be achieved through a Joint Services solution known as the Defense Integrated Military Human Resources System (DIMHRS).

Subsequently, the Acquisition Decision Memorandum (ADM) dated September 8, 2009, directed the transition from a Joint Services solution to a Services solution to build-out and deploy Service-level integrated personnel and pay systems. Through guidance provided in the ADM, the Army conducted a core analysis of the 2009 solution, and determined that the implementation of an Enterprise Resource Planning (ERP) solution based on the PeopleSoft product, remained the most viable option to provide all Army Components with a fully integrated personnel and pay system. The PeopleSoft product is responsive and allows the Army to meet ever-changing requirements on relatively short notice providing capabilities and relevant information to enable Commanders to make rapid decisions. Additionally, PeopleSoft provides the Army with a dynamic ERP platform by which to meet the critical demands of the Army's Audit Readiness program. In concert with Assistant Secretary of the Army for Financial Management and Comptroller (ASA FM&C), the Army's financial management functional sponsor, the IPPS-A program will ensure that the design and configuration of PeopleSoft fully supports the Army Financial Improvement and Audit Readiness (FIAR) program.

Following the Army’s decision to remain with the chosen solution, the Program Executive Office (PEO) Enterprise Information Systems (EIS) was granted program management authority with the Army G-1 as the Functional Sponsor. At this point, the DIMHRS program was concluded with BTA transitioning the existing DIMHRS solution to the Services, and the IPPS-A program was established. IPPS-A leveraged the Army DIMHRS Capability Development Document (CDD), dated July 28, 2010, which superseded the requirements documented in the ORD and provided the Army centric requirements for an integrated personnel and pay system. This allowed the IPPS-A program to enter the acquisition life cycle post- Milestone (MS) A. Prior to the establishment of the IPPS-A program, initial plans for development and deployment of the integrated personnel and pay system utilized a “big bang” approach for training and fielding the chosen solution. Per the Federal Chief Information Officer’s (CIO) 25 Point Implementation Plan to Reform Federal Information Technology (IT) Management, dated December 9, 2010, the program revised its approach to comply with the acquisition requirements to use modular and agile practices, apply and use commodity services which can be deployed rapidly, and result in substantial cost savings. This allowed the IPPS-A program to develop an achievable incremental release strategy that focuses on satisfying the inherent problems as documented in the original MNS. As a result, the IPPS-A program was restructured into two increments with multiple releases. Increment I was developed using the already approved CDD dated July 28, 2010. In the interim, Defense Business Systems were directed to use the Business Capability Lifecycle (BCL) methodology requiring a Problem Statement and a Business Case. BCL requirements were subsequently subsumed by the Department of Defense Instruction (DoDI) 5000.02, dated 7 January 2015.

The Army Acquisition Executive declared Full Deployment for Increment I on 18 April 2014. The Milestone Decision Authority approved the Milestone B for IPPS-A Increment II on 19 December 2014.

1.3.2 Key Interfaces

The Release 2 through 5 specific mission critical pay impacting interfaces for IPPS-A Increment II will be listed in Annexes 1 through 4 respectively after they are determined at the Critical Design Review (CDR) by the PMO and the Functional Management Division (FMD). The IPPS-A SV-08 Systems Evolution Description, Version 1.16 details interfaces (by release) and systems to be subsumed (by release) throughout the life of the system. Planned persistent interfaces for Releases 2 through 5 are also depicted in Appendix B of the approved IPPS-A Increment II Business Case.

IPPS-A's preferred integration approach is to promote the use of Web services for a majority of IPPS-A external interfaces through the Enterprise Service Bus (ESB). These Web services are designed in acquisition, data loading, and outbound patterns and are standardized across IPPS-A to promote reusability, as well as support real-time and batch sharing of data across the enterprise, with the intent of providing Army personnel and administrators access to consistent and updated information across all systems while minimizing cost.

Additionally, IPPS-A plans to provide outbound patterns that allow the consuming system to receive data in various formats including Extensible Markup Language (XML). This provides flexibility for IPPS-A considering the number of recipient systems. It is the intent of IPPS-A to leverage ESB in order to eliminate unnecessary cost associated with supporting point-to-point interfaces with external systems, standardize data structures across multiple interfaces and external systems, and maximize the reusability of each Service Oriented Architecture (SOA) pattern. As external systems upgrade/mature, and as modern systems emerge, the flexibility SOA provides a complete platform for modernization, allowing IPPS-A to respond and integrate with a modernizing enterprise. The SOA/ESB Integration Overview Diagram for Increment II is depicted in Figure 1-3. More detailed information can be found in the IPPS-A Service Oriented Architecture (SOA)/Enterprise Service Bus (ESB) Integration Plan.

Figure 1-3: SOA/ESB Integration Overview Diagram for Increment II

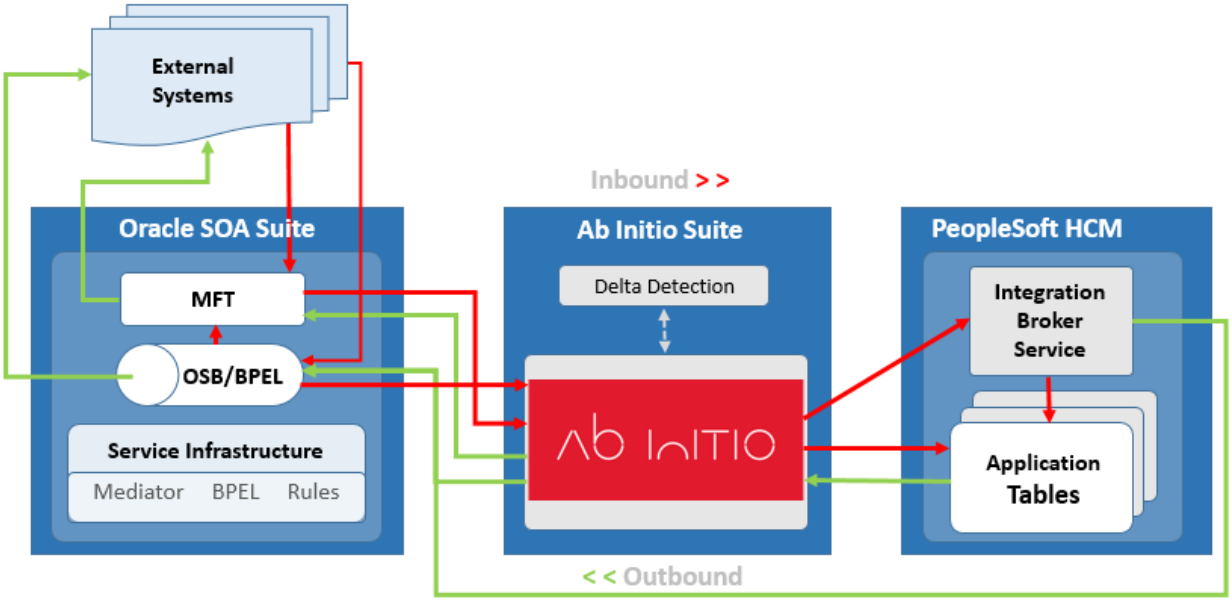

1.3.3 Key Capabilities

1.3.3.1 High Level Objectives

The High Level Objectives (HLOs) represent those capabilities or characteristics of Increment II that are so significant that failure to meet them can be cause for the IPPS-A to be reevaluated, or the program to be reassessed or terminated. The threshold value is the minimum acceptable value that, in the user's judgment, is required to satisfy the need. If threshold values are not achieved, program performance is seriously degraded, the program may be too costly, or the program may no longer be timely. The objective value is the value desired by the user and which the Project Manager (PM) is attempting to obtain. The objective value could represent an operationally meaningful, time critical, and cost-effective increment above the threshold for each program parameter.

The HLOs for Increment II are Release dependent. Releases 2 and 3 do not include the pay capabilities, and therefore cannot satisfy all of the HLOs completely. Releases 4 and 5 have the complete set of capabilities that permit the satisfaction of the HLOs as defined in the IPPS-A BC document.

1.3.3.2 Business Outcomes

The Business Outcomes (BOs) are contained in the BC and outline high level objectives and Business Outcomes related to critical Military Personnel management problems identified in the MNS. The HLOs and BOs are necessary for the Information Management (IM)/ BPR program to resolve those problems. The program will minimize customizations by maximizing BPR and use the Commercial-off-the-Shelf (COTS) product to the maximum extent possible. The most significant BPR result from the IPPS-A program deploying the PeopleSoft ERP, in addition to business process and data standardization across Components into one integrated personnel and pay system, is the inherent audit readiness support that PeopleSoft brings to the table. The native

PeopleSoft product fully supports the Army's FIAR program and allows the IPPS-A program to more easily design and implement the full scope of requirements for audit readiness that results in the Army having fully auditable financial statements for the military personnel appropriations.

1.3.3.3 Program Outcomes

The IPPS-A Increment II BC also identifies the Program Outcomes (POs). The POs are aligned to the related BOs. The POs were developed between the IPPS-A PMO and the Functional Management Division. Validation of Program Outcomes occurs as a result of the successful validation of the Business Outcome Measurement Criteria.

1.3.3.4 Critical Technical Parameters

The Critical Technical Parameters (CTP) for Increment II are Release dependent. The CTPs were developed in close coordination between the PMO Systems Engineer and the Functional Proponent. The CTPs for releases 2 through 5 are depicted in Table 1-1.

1.3.3.5 Critical Developmental Issues

Critical Developmental Issues (CDI) are IPPS-A Increment II decision maker key developmental concerns with bottom line standards of performance that signify the system is ready to proceed to the Limited Fielding Decision (LFD) (Releases 2, 3 and 5) and at the FDD (Release 4). CDIs are those aspects of a system's capability, operational, or technical and other aspects that must be questioned before a system's overall suitability can be known. CDIs were developed in close coordination with the IPPS-A PMO, System Integrator and the Functional Proponent. The Critical Developmental Issues for releases 2 through 5 are depicted in Table 1-2.

.

Table 1-1: Critical Technical Parameters and Measurement Criteria

Supported Operational Requirement	Technical Parameter	Threshold	Objective	Measure	Release(s)
6.2.15 - Continuity of Operations	CTP 001: The system shall replicate data from the primary data center to a secondary data center upon the completion of the transaction.	Less than 60 seconds	Less than 30 seconds	The amount of time required to replicate a transaction.	2,3,4,5
6.2.9 - Data Retrieval	CTP 002: The system shall allow an authorized user* to retrieve pre-defined personnel and pay data on individuals contained within the system.	Single service-member: Less than 10 seconds	Single service-member: Less than 5 seconds	Data query response Time.	2,3,4,5
6.2.9 - Data Retrieval	CTP 003: The system shall allow an authorized user* to retrieve pre-defined personnel and pay data on individuals contained within the system.	Maximum of 4000 members: Less than 10 minutes	Maximum of 4000 members: Less than 5 seconds	Data query response Time.	2,3,4,5
6.3.111 - Pay Computation	CTP 004: The system shall process payroll and generate a pay disbursement file.	No more than 36 hours	Less than 24 hours	The amount of time required to process payroll and produce a pay disbursement file.	4,5
6.3.127 - Support the full range of personnel lifecycle activities	CTP 005: The system shall support access to 40,000 concurrent users. Managers/Leaders: 25% Members (Self-Service): 50% POI/HR Specialists/Admin: 25%	40,000 users	40,000 users	Total number of concurrent users.	2,3,4,5
8.0.0 - Cybersecurity	CTP 006: The system shall notify an authorized user* of system security events**.	No more than 1 minute	No more than 5 seconds	The amount of time required to notify an authorized user.	2,3,4,5

Supported Operational Requirement	Technical Parameter	Threshold	Objective	Measure	Release(s)
14.2.2 - Provide Training	CTP 007: The Institutional training system*** shall allow an authorized user* to reset the training data set to its original state.	No more than 4 hours	Less than 1 hour	The amount of time required to reset the training data.	2,3,4,5
14.2.2 - Provide Training	CTP 008: The Institutional training system*** shall have the capability to receive a training data refresh.	No more than 24 hours	Less than 12 hours	The amount of time required to refresh the training data.	2,3,4,5
14.2.2 - Provide Training	CTP 009: The Operational training*** system shall allow an authorized user* to reset the training data set to its original state.	No more than 4 hours	Less than 1 hour	The amount of time required to reset the training data.	2,3,4,5
14.2.2 - Provide Training	CTP 010: The Operational training system*** shall have the capability to receive a training data refresh.	No more than 24 hours	Less than 12 hours	The amount of time required to refresh the training data.	2,3,4,5
7.1.0 - Data Accuracy	CTP 011: The system shall provide non pay-impacting data to an external system.	97% of non-pay-impacting data provided to external systems will reflect the authoritative source data in the IPPS-A database.	100% of non-pay-impacting data provided to external systems will reflect the authoritative source data in the IPPS-A database.	The percentage of non-pay-impacting data provided to external systems that reflect the authoritative source data in the IPPS-A database.	2,3,4,5
7.1.0 - Data Accuracy	CTP 012: The system shall process non pay-impacting data received from an external system.	97% of non-pay-impacting data received through an interface will be processed accurately by IPPS-A.	100% of non-pay-impacting data received through an interface will be processed accurately by IPPS-A.	The percentage of non-pay-impacting data received from external system that is processed.	2,3,4,5

Supported Operational Requirement	Technical Parameter	Threshold	Objective	Measure	Release(s)
7.1.0 - Data Accuracy	CTP 013: The system shall process system foundation data received from an external source.	99.5% of foundation data**** received from an external source will be processed by IPPS-A.	100% of foundation data received from an external source will be processed by IPPS-A.	The percentage of processed foundation data received from an external source.	2,3,4,5
14.2 - Provide Training	CTP 014: The Self Development/NET training system*** shall allow an authorized user* to reset the training data set to its original state.	No more than 4 hours	Less than 1 hour	The amount of time required to reset the training data.	2,3,4,5

*IPPS-A defines an "authorized user" as a user with appropriate roles and permissions in excess of self-service.
**This CTP is derived from the Technical Requirements Document statement 8.0.0.32: "The system shall create, maintain, and protect from modification, unauthorized access or destruction, an audit trail ensuring that all actions that affect the security of a system can be traced to the responsible party based on individual identity."
***Training environments are defined within the IPPS-A Training (IPPS-A(T)) Environment Capabilities Requirements, Version 5 dated 5 Sep 17.
****Configuration or Foundation Data refers to application data that is core to the system. This data can include application installation values, application setup data (e.g., SetID, Business Unit, etc.), and application functionality data (e.g., Job Codes, Employee or POI Type, etc.).

Table 1-2: Critical Developmental Issues and Measurement Criteria

Issue	Description	Threshold	Objective	Measure
Critical Developmental Issue 1.1 Pay Computation	The system must accurately compute payroll calculations based on available data to correctly pay Soldiers.	99% of payroll calculations must be computed correctly.	100% of payroll calculations must be computed correctly	**MOP CDI 1.1:** Proportion of accurately computed payroll calculation to the total number of payroll calculations attempted (including entitlements, deductions and benefits).
Critical Developmental Issue 1.2 Improvement of Transaction Auditability	IPPS-A will be configured to write all required transactions to unalterable pre-defined audit tables for use by top of the system internal auditors and external audit sources.	95% of required transactions are written to the audit table.	99% of required transactions are written to the audit table.	**MOP CDI 1.2-1:** The proportion of the successful number of required transaction written to an unalterable pre-defined audit tables to the total number of required transactions.
		95% of transactions initiated within IPPS-A are successfully audited.	99% of transactions initiated within IPPS-A are successfully audited	**MOP CDI 1.2-2:** The percentage of transactions initiated within IPPS-A that are successfully traced from initiation, approval, and posting, to include supporting documentation.
Critical Developmental Issue 2.1 RMF Compliance	IPPS-A must meet the (RMF) requirements.	IPPS-A meets RMF requirements to satisfaction of AO.	N/A	**MOP CDI 2.1:** The system meets RMF requirements and IATT from the AO.

Issue	Description	Threshold	Objective	Measure
Critical Developmental Issue 2.2 Protect	IPPS-A must provide adequate Cybersecurity protection to support the operational mission, data, and users.	IPPS-A must implement security controls at the Confidentiality, Integrity, and Availability (CIA) levels of Moderate, Moderate, Moderate, with an acceptable level of risk as determined by the AO and Security Control Assessor.	IPPS-A must implement security controls at the Confidentiality, Integrity, and Availability (CIA) levels of Moderate, Moderate, Moderate.	**MOP CDI 2.2:** The implementation of the IPPS-A security controls at the Confidentiality, Integrity, and Availability (CIA) levels of Moderate, Moderate, Moderate, with an acceptable level of risk as determined by the AO and Security Control Assessor.
Critical Developmental Issue 2.3 React and Restore	IPPS-A must provide adequate Cybersecurity reaction against threats to support the operational mission, data and users.	IPPS-A must provide a secure, defense-in-depth posture through the integration of people, technology (e.g., intrusion detection software, hardware and network firewalls) and operations, in order to initiate corrective actions associated with unauthorized access within 30 minutes of detection or notification.	IPPS-A must provide a secure, defense-in-depth posture through the integration of people, technology (e.g., intrusion detection/protection software, hardware and network firewalls) and operations, to provide near real-time reactions associated with unauthorized access.	**MOP CDI 2.3:** IPPS-A capability to respond to detected intrusions and penetrations, exploitation of data, and/or attacks.

Issue	Description	Threshold	Objective	Measure
Critical Developmental Issue 3.1 Overall System Usability:	The Composite Score on System Usability Scale (SUS)	SUS score greater than 50.	SUS score greater than 70.	**MOP CDI 3.1:** Percentage of favorable User opinion rating on System Usability Scale (SUS) on ease of use of IPPS-A applications and functions. Percentage of system design characteristics that adhere to HFE best practices guidelines and standards. ATEC SEP Usability metrics including mean number of tasks required to complete an end-to-end business process; and total number of steps required to complete a task.
Critical Developmental Issue 3.2 Effectiveness:	The percentage of tasks completed on the 'first-try', where 'first-try' is defined as the successful completion of a task or end-to-end business process.	80% of trained users shall successfully complete each critical task (or end-to-end business process) on the 'first- try', without assistance or error that if persists or occurs results in an inability to complete the task (or end-to-end business process) within an acceptable time-to-task standard.	85% of trained users shall successfully complete each critical task (or end-to-end business process) on the 'first- try', without assistance or error that if persists or occurs results in an inability to complete the task (or end-to-end business process) within an acceptable time-to-task standard	**MOP CDI 3.2:** Proportion of users able to complete each task on the first try without assistance or error.
Critical Developmental Issue 3.3 Trainability	The percentage of users' and SMEs favorable or positive ratings	80% of trained users and SMEs who responded favorably or positively on a Likert scale indicating their confidence to perform tasks without needed technical support.	85% of trained users and SMEs who responded favorably or positively on a Likert scale indicating their confidence to perform tasks without	**MOP CDI 3.3:** Proportion of user and SME positive ratings. SMEs include PeopleSoft Consultants providing input to the design and training to the program office, and observer controllers (OCs).

Issue	Description	Threshold	Objective	Measure
			needed technical support.	
Critical Developmental Issue 3.4 Trust in Technology Measures	The percentage of users' favorable or positive ratings	80% of trained users who responded favorably or positively on a Likert scale to specific measures of reliability, functionality, and helpfulness.	85% of trained users who responded favorably or positively on a Likert scale to specific measures of reliability, functionality, and helpfulness.	**MOP CDI 3.4:** Proportion of user positive ratings.
Critical Developmental Issue 4.1 Enterprise Administration	IPPS-A provides Enterprise Administration to include maintenance, integration and operation of Army personnel and pay business processes in a timely manner.	80% of trained users who responded favorably or positively on a Likert scale to specific measures of reliability, functionality, and helpfulness.	85% of trained users who responded favorably or positively on a Likert scale to specific measures of reliability, functionality, and helpfulness.	**MOP CDI 4.1:** System Administrator personnel rating and comments regarding the adequacy of software tools, system administration and user guides and administrative documentation to manage system and network configuration.
Critical Developmental Issue 4.2 Help Desk Support	IPPS-A provides Helpdesk support and documentation in a timely and accurate manner.	80% of trained users and/or SMEs who responded favorably or positively on a Likert scale to specific measures of reliability, functionality, and helpfulness.	85% of trained users and/or SMEs who responded favorably or positively on a Likert scale to specific measures of reliability, functionality, and helpfulness.	**MOP CDI 4.2-1:** The SME and user rating and comments regarding adequacy for the helpdesk to resolve problems. SMEs include PeopleSoft Consultants providing input to the design and training to the program office, and observer controllers (OCs).

Issue	Description	Threshold	Objective	Measure
	Max time for help desk to resolve mission essential or critical issues.	90% of helpdesk tickets are resolved within 4 hours (critical priority) or 24 hours (high priority).	100% of helpdesk tickets are resolved within 4 hours (critical priority) or 24 hours (high priority).	**MOP CDI 4.2-2:** Proportion of problems submitted that were resolved by the helpdesk within 4 hours (critical priority) or 24 hours (high priority) to all critical and high priority problems submitted.
Critical Developmental Issue 4.3 Efficiency	The percentage of errors resolved or mitigated by the end user without escalating to help desk	80% of user errors (i.e. incorrect or inaccurate data field entries, setup or configuration for report generation or queries, etc.) shall be resolved or mitigated with online help or FAQs without the need help desk intervention.	85% of user errors (i.e. incorrect or inaccurate data field entries, setup or configuration for report generation or queries, etc.) shall be resolved or mitigated with online help or FAQs without the need help desk intervention.	**MOP CDI 4.3:** Proportion of user errors that were corrected/resolved without use of the help desk.
Critical Developmental Issue 4.4 Failover/Disaster Recovery	Time required to failover to a fully functional Secondary Data Center.	Threshold: Less than 6.7 hours.	Objective: Less than 2.7 hours.	**MOP CDI 4.4:** Time required to failover to a fully functional Secondary Data Center.

1.3.4 System Threat Assessment

Threats to IPPS-A are described in the System Threat Assessment Report (STAR) for IPPS-A dated 23 May 2016. Security requirements will be incorporated as defined in Department of Defense Instruction (DoDI) 8500.01, "Cybersecurity" and DODI 8510.01, Risk Management Framework (RMF) for DoD IT.

The Authorization Official (AO) has determined the Confidentiality, Integrity, and Availability (CIA) levels for IPPS-A to be "Moderate, Moderate, Moderate".

1.3.4.1 System Specific Threats to IPPS-A

There are two types of system specific threats to IPPS-A:

- Computer Network Operations (CNO): CNO threats consist of Computer Network Attack (CNA) and Computer Network Exploitation (CNE). CNA includes activities designed to deny, degrade disrupt, or destroy computer data, systems, and networks. CNE includes efforts to extract information from a networked system and is often a precursor to CNA;
- Electronic Warfare (EW): The probability of a threat entity employing EW systems specifically against IPPS-A, while possible is remote. Any EW attack would most probably be directed against the communications systems that IPPS-A uses to transmit data.

1.3.4.2 Operational Threat Environment

The future operational environment will be complex and uncertain, and the gap between the United States and others will narrow further as adversaries will employ adaptive strategies to counter U.S. military advantages and technological overmatch. The threat will be hybrid, innovative, adaptive, globally connected, full-spectrum, and networked, possessing a range of old and advanced technologies. Adversaries will operate conventionally and unconventionally, employing adaptive and asymmetric capabilities. Access to information technologies will also allow even less developed countries to improve their information operations capabilities, and a wide variety of actors operating outside military control will now be a part of any operational environment. Information warfare against supporting forces and lines of communications, both stateside and overseas, will generate potential for greater confusion. IPPS-A is an enterprise, Commercial off-the-shelf (COTS) based software system, which operates on the Non-Secure Internet Protocol Router Network (NIPRNet), Secret Internet Protocol Router Network (SIPRNet), and supports Army financial management. Consequently, opponents are likely to perceive it as a vital U.S. military asset and may act to degrade or exploit it, most likely via computer network operations. The three categories of threats to IPPS-A are identified below.

- **Outsider threats:** an individual who is not an employee and has no authorized logical or physical access to the system. May represent an adversary employed by a foreign power. The objective of the Outsider is to gain direct access to funds and information for which foreign powers will pay money. The Outsider may have covertly gained access to a user Common Access Card (CAC) and Personal Identification Number (PIN) of a valid IPPS-A account or the private certificate and PIN information. The Outsider will have data and

information which could be obtained through standard internet search tools and general Army Knowledge Online (AKO) search. The Outsider has little fear of retribution/capture and his evasion of detection is primarily a function of his desire for continued access via the captured authentication mechanism. The Outsider generally would not conduct attack activities unless specifically directed by an employer or they could somehow directly profit (demonstrate capability, blackmail provider, etc.) from the activity.

- **Insider threats:** a user with authorized logical access to the IPPS-A system. May represent a disgruntled employee who is seeking to disrupt operations with a secondary objective of monetary gain. The Insider will have his own user CAC and PIN, but may be unwilling to use them for fear of attribution. The Insider may have access to test user accounts, valid user accounts, or valid administrative accounts. The Insider will have data and information which could be obtained through standard internet search tools and general AKO search, as well as technical manuals, network or system diagrams, or other information regarding the system. The Insider has significant fear of retribution/capture and his evasion of detection is primarily a function of his desire to stay anonymous.
- **Nearsider threats:** a user with authorized physical or logical access to the local IPPS-A infrastructure, such as system routers, switches, and system hardware. May represent a disgruntled employee who is seeking to compromise the system and obtain system/user information for the purpose of monetary gain. The nearsider may try to gain access to the system via its hardware connections to log, intercept, or manipulate data for monetary or personal reasons. The Insider will have data and information which could be obtained through standard internet search tools and general AKO search, as well as technical manuals, network or system diagrams, or other information regarding the system.

1.3.5 Systems Engineering (SE) Requirements

The Technical Performance Measures referenced in the Systems Engineering Plan (SEP), include the Measures of Performance (MOPs) associated with the IPPS-A CTPs, HLOs and CDIs. APPENDIX F of the TEMP provides further details on Reliability growth, tracking and software maturity metrics.

1.3.6 Special Test or Certification Requirements

Special tests and certification activities, described in this section, will be conducted during SDT, Government Acceptance Test (GAT), and Operational Test (OT) activities for each Release as required.

1.3.6.1 Human Systems Integration

IPPS-A is committed to achieving the goal of an easy-to-use-system at each release. To achieve this, IPPS-A PMO has established a Human System Integration-User Experience (HSI-UX) Integrated Product Team (IPT). The Army Research Laboratory (ARL) Human Research and Engineering Directorate (HRED) has overall responsibility for the design and conduct of the Human Systems Integration (HSI) analysis and represents the HQDA Deputy Chief of Staff (DCS) G-1 Human Systems Integration Directorate, as lead HSI analyst, during all aspects of the IPPS-A system acquisition in accordance with Army Regulation (AR) 602-2, AR 73-1, and AR 700-127. The HSI analyst will integrate with the IPPS-A PMO Test Team to provide support to

test planning, data collection, and assessment of human-systems integration domains of Manpower (number of people), Personnel Capabilities (skills, knowledge, and abilities that people bring to a job), Training (to enable users to operate and maintain the system), and Human Factors Engineering (HFE) (design for usability – the ability to accomplish a task). System safety, health hazards, and Soldier survivability domains may not apply during the evaluation of IPPS-A and will be reported by exception.

1.3.6.2 Joint Interoperability Certification

Joint Interoperability Test Command (JITC) will perform Interoperability (IOP) Assessments (if the Net Ready (NR) Key Performance Parameter (KPP), or HLO is mature/testable and measurable), as applicable, during the Releases 2, 3 and 5 SAT and OT events. The purpose of this IOP Assessment is to provide the PMO with JITC's analysis of IPPS-A progress towards Interoperability Evaluation/Certification.

JITC will also perform IOP Evaluation during Release 4 SAT and OT. The IOP Evaluation provides data for the Joint IOP Certification. IPPS-A PMO and SI personnel will support the IOP Assessment and Evaluation/Certification activities as required.

1.3.6.3 Army Interoperability Certification

Army Interoperability Certification (AIC) is confirmation that a system has undergone appropriate interoperability testing and that the applicable standards and requirements for information assurance, compatibility, interoperability and integration have been met. The Army Chief Information Officer (CIO)/G6 is responsible for making an AIC determination on IPPS-A. CIO/G6 will leverage the approach to testing and certification of ERP systems established with the AIC certification process. This approach is based on the following features and artifacts:

- Establish a Memorandum of Agreement (MOA) between CIO/G6 and PM IPPS-A for AIC determinations;
- During JITC and ATEC test observation, CIO/G6 will waive AIC certification test requirements. At completion of JITC and ATEC test observation for each Release, issuance of associated test plans, test reports, and analysis of said reports, CIO/G6 will make an AIC determination.

1.3.6.4 Cybersecurity

The IPPS-A Cybersecurity Strategy describes the cybersecurity requirements, system categorization, security controls, assessment approach, testing, shortfalls, and authorization for IPPS-A Increment II. The Cybersecurity Strategy describes the categorization of IPPS-A using the confidentiality, integrity, and availability security objectives with assigned impact values of low, moderate, or high for each security objective. The Chief Developmental Tester will ensure that security control assessment activities are coordinated with certification efforts, DT&E, and OT&E. The approach to IPPS-A Cybersecurity testing is detailed in APPENDIX E .

1.3.6.5 Financial Improvement and Audit Readiness

IPPS-A is committed to achieving the goal of Audit Readiness at each release. To achieve this, IPPS-A PMO has established an Audit and Compliance Working Integrated Product Team (A&C WIPT). The A&C WIPT members includes representatives from the PMO, FMD, ASA(FM&C),

ATEC, and the Army Audit Agency (AAA). The A&C WIPT has the responsibility for implementation, integration, and oversight of all audit readiness and compliance activity for the IPPS-A program. The A&C WIPT is also responsible for the implementation of the Oracle Governance Risk and Compliance (GRC) suite of software tools, integrating personnel and processes with Cybersecurity and Information Assurance (IA).

The A&C WIPT has developed the IPPS-A Financial and Operational Audit Readiness Plan (Audit Plan) that provides a path forward for IPPS-A to achieve Audit Ready at each release. The purpose of the Audit Plan is to detail the frameworks and processes that will help ensure that IPPS-A is compliant with the Finance and Accounting Enterprise Standards, as well as all Federal, DoD, and Army audit requirements and regulations. The IPPS-A Audit Plan addresses all activities, business processes, and data managed, stored, or acted on by IPPS-A that impact and/or support Army Military Pay (MILPAY) financial reporting processes. The Audit Plan is specific to IPPS-A and does not include the audit readiness of other Army systems with which IPPS-A interfaces. The Audit Plan incorporates each release's audit strategy and implementation activities.

Prior to Release 2 CDR, AAA will perform an Examination Attestation in the form of review and analysis activities including, but not limited to system requirements, design, policies, processes and procedures. This review will assist with verifying that the appropriate audit functions are being incorporated early into the system's design and prior to the system's development and test phases.

During Release 2 SAT, AAA will conduct an independent access control audit during IPPS-A Increment II Release 2 Government Acceptance Test (GAT) activities. The objective of the access control audit is to verify IPPS-A user roles are properly established, maintained and updated, and that permission levels restrict "super user" access to protect sensitive data within the operational system. The access control audit would identify potential control weaknesses related to IPPS-A Increment II Release 2 access prior to becoming an official system of record. With over 1.1 million Soldier personnel records already in IPPS-A Increment I, controls over access roles should be audited before the integration of any pay data. By properly implementing "least privileged" access controls, the Army would prevent the risk of unauthorized access to sensitive personally identifiable information (PII).

During Release 4, as part of the IPPS-A Audit Readiness compliance, JITC will perform a Financial Standards Compliance Assessment (FSCA) of the IPPS-A system relative to financial reporting, revenue and accounts receivable, HR and payroll, funds control and budgetary accounting, general ledger, travel, audit trails and internal/system controls. JITC will validate IPPS-A compliance with DoD Financial Improvement and Audit Readiness (FIAR) Guidance and Standard Financial Information Structure (SFIS) standards.

The FSCA will focus on six key areas:

- Chart of Accounts (COA) alignment with United States Standard General Ledger. (USSGL) and DoD Standard Line of Accounting (SLOA).
- USSGL Transaction Posting Logic.
- Defense Departmental Reporting System (DDRS) Trial Balance.
- Business Enterprise Architecture (BEA) SFIS Requirements and Business Rules.

- Interface compliance of Inbound/Outbound Interfaces' with SFIS and SLOA.
- Tie Point Reconciliation.

1.3.7 Previous Testing

The Army deployed IPPS-A Increment I in three waves: ARNG, Wave 1; RA, Wave 2; and USAR, Wave 3. Throughout 2013 and 2014, the PMO conducted CAT, PLT, DIT, SIT and SAT for all three waves.

ATEC conducted an FOT&E event from March 2014 through January 2015. The FOT&E was conducted in two phases: Phase 1 of the FOT&E utilized email surveys of a sample of the worldwide Army population including RA, ARNG, and USAR Soldiers. Phase 2 included specific test actions at Rock Island Arsenal, Illinois, and Camp Shelby, Missouri in January 2015.

Per the Operational Test Agency Evaluation Report dated January 2016, IPPS-A Increment I demonstrated the operational capability described in the IPPS-A Increment I Acquisition Strategy and in the Memorandum, Office of Deputy Chief of Staff, G-1, DAPE-TB, 14 January 2013, subject: Military Benefit Overview for IPPS-A Inc I Capabilities. The program reached full deployment (FD) for Increment I on 13 July 2015.

2 PART II - TEST PROGRAM MANAGEMENT AND SCHEDULE

2.1 Test and Evaluation Management

IPPS-A Program Management Office (PMO): IPPS-A PMO is the organization that directs the Life-Cycle Management Division (LMD) activities, which includes the T&E Branch. The PM IPPS-A has the overall responsibility for establishing an effective T&E program for Increment II. The T&E program planning, preparation, execution, management, and reporting is delegated to the LMD, T&E Branch.

Test and Evaluation Branch: The IPPS-A T&E Branch has been designated and shall serve as the Lead Developmental Test and Evaluation (DT&E) Organization. As the Lead DT&E Organization they shall be responsible for providing technical expertise on testing and evaluation issues to the Chief Developmental Tester; conducting DT&E activities for IPPS-A, as directed by the Chief Developmental Tester; and assisting the Chief Developmental Tester in providing oversight of the contractors on the program and in reaching technically informed, objective judgments about contractor DT&E results for IPPS-A.

The IPPS-A PMO T&E Branch Chief serves as the Chief Developmental Test Officer and is responsible for all activities conducted by the IPPS-A T&E Branch.

The Chief Developmental Tester is responsible for coordinating the planning, management, and oversight of all DT&E activities for the program; maintaining insight into contractor activities under the program and overseeing the test and evaluation activities of other participating government activities under the program; and helping program managers make technically informed, objective judgments about contractor developmental test and evaluation results.

System Integrator (SI): CACI, the System Integrator (SI) is responsible for managing, planning, preparing for, executing, and reporting on SDT phase events and supporting the government throughout other T&E phases as required.

Director Operational Test and Evaluation (DOT&E): DOT&E is an approving authority for the TEMP and Operational Test and Evaluation (OT&E) plans and makes determinations on test adequacy. DOT&E will provide an independent assessment of operational effectiveness, suitability and survivability, of IPPS-A Increment II and report the results to the Milestone Decision Authority (MDA), the Information Technology (IT) – Overarching Integrated Product Team leader, and Congress.

Deputy Assistant Secretary of Defense for Developmental Test and Evaluation (DASD (DT&E)): The DASD(DT&E) provides guidance developing and documenting the program's evaluation strategy and management approach throughout the program's life cycle; reviews and approves DT&E portions in the TEMP; monitors and reviews all DT&E activities; serves as a permanent member of the T&E Working Integrated Product Team (WIPT); and reviews all program related documentation. As an advisory member of the Defense Acquisition Board (DAB) and other key acquisition bodies, provides independent assessments of programs' DT&E, execution, and risk. Also serves as the Director, Test Resource Management Center.

Deputy Under Secretary of the Army – Test and Evaluation (DUSA-TE): DUSA-TE ensures final coordination of the TEMP with Headquarters, Department of the Army (HQDA) staff elements and coordinates the TEMP with DASD(DT&E) and DOT&E.

U.S. Army Test and Evaluation Command (ATEC): The IPPS-A Increment II Operational Assessment will be conducted by ATEC in accordance with ATEC Regulation 73-1 to determine the operational effectiveness, suitability and survivability of the system. ATEC is responsible for:

- Providing an Independent Operational Assessment;
- Providing support to TEMP development, review and coordination efforts;
- Providing support to CAT, System Integration Test (SIT), SAT test plan development, review and coordination efforts;
- Providing an Operational Report (Operational Test Agency (OTA) Milestone Assessment Report (OMAR)), an Operational Assessment Report (OAR), or an Operational Evaluation Report (OER) at the conclusion of the Operational Tests;
- Chairing the Reliability, Availability, and Maintainability (RAM) Scoring Conference for the OT test events;
- Planning, coordinating, executing, evaluating, and reporting on the Limited User Test (LUT), Initial Operational Test (IOT) and Cybersecurity Testing.

Program Executive Office Enterprise Information Systems (PEO EIS): PEO EIS provides program management oversight to IPPS-A PMO and its responsibilities for the technical, life-cycle, and business management aspects of IPPS-A Increment II development. PEO EIS will provide program management oversight and assistance to T&E activities. The Program Executive Officer is the AO for IPPS-A.

User Representatives: The following organizations represent the IPPS-A Increment II user community during T&E activities and will participate in the T&E WIPT.

- **Army G-1 FMD:** The Army G-1 FMD will:
  - Coordinate internally and externally with IPPS-A PMO to integrate staff actions associated with IPPS-A Increment II testing;
  - Ensure functional representation in IPPS-A PMO Increment II T&E WIPT;
  - Elevate functional issues to appropriate levels for resolution;
  - Participate in applicable program control boards, technical reviews, and internal/external meetings related to IPPS-A Increment II testing;
  - Develop and/or verify test scenarios for test events where applicable;
  - Assist in the evaluation of test results;
  - Coordinate for Active Duty component SMEs and representation as required;
  - Participate in test events as required.
- **U.S. Army National Guard (ARNG):** The ARNG will provide test participants (Government subject matter experts (GSMEs/SMEs) and units to support the IPPS-A Increment II T&E activities to include assisting IPPS-A PMO T&E personnel with the development of functional test scenarios and scripts.
- **U.S. Army Reserve (USAR):** The Army Reserve will provide test participants (GSMEs)/SMEs) to support the IPPS-A Increment II T&E activities to include assisting IPPS-A PMO personnel with the development of functional test scenarios and scripts.
- **Army Human Resources Command (HRC):** The HRC will provide test participants (GSMEs/SMEs) to support the IPPS-A Increment II T&E activities to include assisting IPPS-A PMO personnel with the development of functional test scenarios and scripts.

System Owners will provide support IPPS-A PMO T&E activities including recommendations for interface and conversion test scenarios and scripts. Each Army component is responsible for internal support coordination to ensure proper participation.

2.1.1 T&E Organizational Construct

To ensure that the concerns of all IPPS-A user organizations and stakeholders are satisfied with the T&E strategy, plans, and conduct of testing activities, the T&E Branch has established the T&E WIPT, the Integrated Test Team (ITT), the Human Systems Integration-User Experience IPT (HSI-UX IPT), the Reliability Working Group, and the Test Review Board (TRB). The applicable charters are referenced in APPENDIX A . It is through these forums that the IPPS-A PMO T&E Branch communicates with and coordinates T&E activities with IPPS-A Increment II user organizations and other stakeholders.

The T&E WIPT has assisted in the development of this document. This has been achieved in the following three ways:

- Direct interaction with the members of the T&E WIPT organization to address specific issues related to the TEMP;
- Formal T&E WIPT meetings held monthly with user and stakeholder communities;

- Workshops in which specific members of the T&E WIPT met to provide information required to develop this document.

The ITT, a sub-working group of the T&E WIPT, is led by the IPPS-A T&E Branch Chief. Its purpose is to provide assistance to the T&E Branch in planning, coordinating, and executing Government owned DT events to ensure government testing is fully integrated with the Operational Test organizations. Members of the ITT may assist, as required, in the development and/or coordination of test plans, scripts, scenarios and reports for each test event.

ITT membership is comprised of, but not limited to, the IPPS-A PMO T&E Branch, IPPS-A PMO Cybersecurity Personnel, IPPS-A Technical Management Division (TMD), ATEC, JITC, ARL, Threat Computer Operations Team (TCOT), and CIO/G-6. IPPS-A T&E Branch Chief may expand the ITT working group to include applicable stakeholders and system interface owners. Types of ITTs include, but are not limited to Cybersecurity, Audit and Payroll.

The Human Systems Integration/User Experience (HSI/UX) WIPT is the body that is charged with the program's approach to usability. The objectives of the HSI WIPT include establishing event driven user centered design and development, preparing the Human Systems Integration Plan (HSI-P), assess usability. The HSI/UX WIPT is chaired by the ARL-HRED representative to the IPPS-A program and includes members from the PMO, SI, and Army G1.

The TRB will meet during all test events to review test status, schedule, and metrics; and to review/adjudicate Test Incident Reports (TIRs), test generated Trouble Tickets, and complete System Problem Reports (SPRs). The TRB will be chaired by the IPPS-A PMO T&E Branch Chief during the CAT, SIT and SAT test events.

2.2 Common T&E Database Requirements

For Developmental Testing, the IPPS-A Increment II T&E strategy includes the use of the web-enabled Hewlett Packard (HP) Application Lifecycle Management (ALM) to collect and store test results in a central repository that is accessible by staff members from all test organizations. The central repository will become a unified set of data and artifacts collected across all test events that will allow the data to be shared by all stakeholders in support of independent analysis, evaluation, and reporting. The data and artifacts pedigree, including the actual test conditions (system configurations) associated with each test script/scenario, will be maintained within the tool. Additionally, the PMO will post test data and artifacts to the program Stakeholder's SharePoint site and make the information available to T&E WIPT members.

A summary of the test artifact data elements contained within the ALM repository can be found in the IPPS-A Test Management Plan. The ALM repository will be under configuration control and subject to verification by the Life-Cycle Support Branch (LCSB) personnel.

Staff members from external test organization who require access to the test artifact repositories will be required to complete a Department Army Form 2865 – System Authorization Access Request (SAAR). Competed SAARs will be forward to the IPPS-A Cyber Security Team for approval.

User juries, as part of government acceptance testing, will be conducted on incrementally available capability following Build with members from the ARNG. The intent is to verify and validate that a trained representative user is able to successfully complete at least 85% of all

critical and high frequency tasks, on the first attempt, with minimal impact to workload or task time. User juries will provide usability data (i.e. task-times, number of steps to complete a task, and need for clarification or additional training assistance given system design) and provide additional opportunities to collect test incident reports (TIRs) for any software defects that exist. Software defects or overwhelmingly negative usability data for a given feature or epic will be reported and adjudicated through an internal HSI-UX Tiger Team comprised of SMEs from the HSI-UX IPT, Test, FMD, and PeopleSoft to understand its potential impact to overall mission accomplishment and need for redesign. Soldier survey data collected through the NOVI Survey System will be analyzed in addition to the usability performance data collected from each user jury, and will be summarized in PMO test reports which will be posted to the program Stakeholder's SharePoint and made available to T&E WIPT members.

2.3 Deficiency Reporting

The Deficiency Reporting process and current metrics are detailed in APPENDIX F.

2.4 TEMP Updates

The PMO will coordinate updates through the T&E WIPT within 90 days of completion of each release's CDR. For Releases 3 and 5, updates will be limited to the release-specific annexes. The Release 4 update will be submitted as the Milestone C TEMP, requiring full OSD level staffing. Any fundamental changes to the integrated T&E strategy described in the main document that the T&E WIPT cannot resolve will require formal staffing and approval in accordance with (IAW) DoDI 5000.02, dated 7 January 2015.

Each release specific annex is divided into the following sections:

- Purpose;
- Scope;
- Release-specific updates;
- Release-specific capabilities;
- Release-specific Test Schedule;
- Release-specific T&E Funding;
- Release-specific Developmental Evaluation Framework (DEF);
- Release-specific Mission Critical Pay Impacting Interfaces.

2.5 Integrated Test Program Schedule

The detailed release specific Integrated Test Program Schedules are shown in Annexes 1 through 4 for Release 2 through 5, respectively. Each schedule displays the overall time sequencing of the T&E phases, events and milestones.

2.5.1 Schedule Concurrency Risk Mitigation

The IPPS-A PMO is implementing mitigating steps to reduce risk associated with the concurrent schedule of Releases 3-5 development. PMO mitigating actions include government blue printing activities, software prototyping, and PeopleSoft Global Payroll demonstrations. The combination of these activities allows the government to adequately assess the technical maturity of the system prior to the IPR decisions that will precede Releases 3-5. Additionally, the actions

will allow the government to evaluate the technical performance of the SI before awarding the subsequent Options.

At contract award, the government provided the SI with Blueprinting artifacts that would normally be developed post contract startup by the SI. This provides the SI additional time and resources to fully assess the government's intent, make recommendations, and develop a complete and comprehensive design package. The Blueprinting artifacts provided as Government Furnished Information (GFI) include a complete set of requirements decomposed to the lowest level specification, BPR maps, an analysis of Legacy System capability, the list of Authoritative Data Sources, and preliminary Fit/Gap analysis. The Fit/Gap activities require that the PeopleSoft 9.2 COTs be configured in a manner conducive to being able to determine the degree of configuration and customization necessary to meet the Army's requirements. The resulting Fit/Gap product is an IPPS-A prototype system that can be used to further support final Fit/Gap analysis to be performed by the SI and detailed design concepts.

2.5.1.1 Limited Pay Demonstration

The government will demonstrate the pay impacting business processes throughout the development and testing of Releases 2 and 3. The demonstrations are intended to validate that Releases 2 and 3 are implementing the pay impacting Personnel business processes in a manner that will support the actual Pay function to be developed in Release 4. The Pay demonstrations will be conducted in parallel to the DT testing events in a separate environment. The demonstration environment will include the PeopleSoft Global Payroll module so that pay impacting data can be pushed through the system to produce mock pay files. The Pay capability will have the minimum level of configuration necessary to demonstrate net pay functionality, i.e., basic pay and deductions and will not attempt to build Release 4 capability early.

The Limited Pay Demonstrations will occur in the following two phases:

- Release 2 Trigger Validation – Utilizing the current IPPS-A testing baseline, Release 2 HR transactions will be executed as "triggers". Pay Calculation will be run to ensure that the HR transactions will trigger an appropriate payroll response, i.e. a promotion triggers a change in rate of pay. The focus of this phase is on the triggers themselves versus the accuracy of the payroll computation.
- Release 3 Trigger Validation – Utilizing the current IPPS-A testing baseline, Releases 2 and 3 HR transactions will be executed and Pay Calc run to ensure that the transactions will trigger an appropriate payroll response. The focus of this phase is on the triggers themselves versus the accuracy of the payroll computation. Figure 2-1 depicts the trigger validation process.

Figure 2-1: Trigger Validation Process

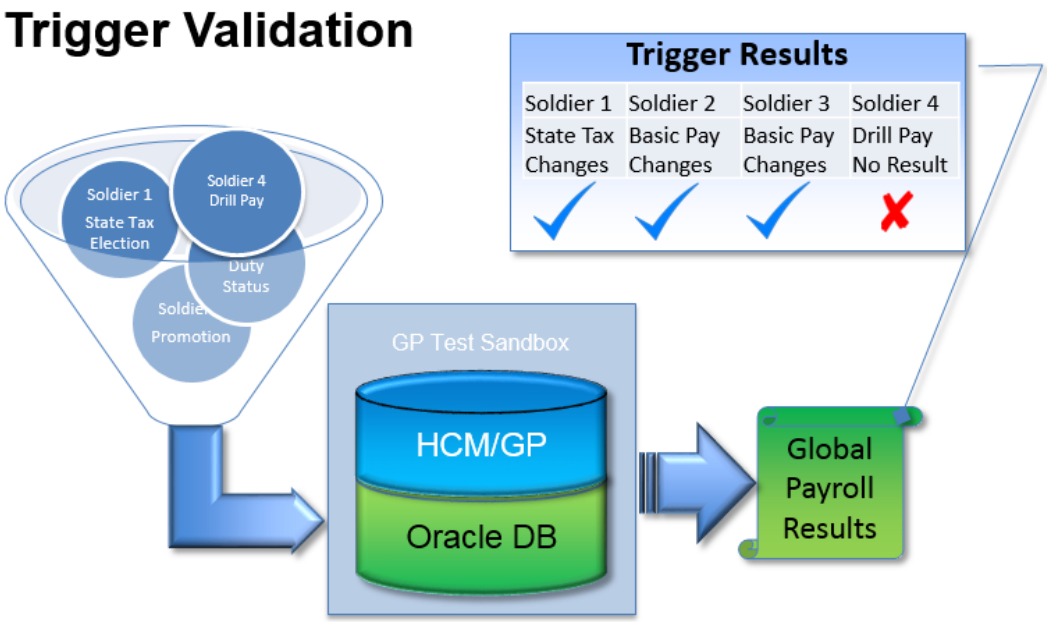

Following each Limited Pay Demonstration, an informal out-brief to the PMO, FMD, DOT&E, DASD(DT&E), DUSA-TE and ATEC will be conducted detailing the PMO T&E team's methods and findings. The out-briefs will inform the IPRs for Releases 3 and 4.

3 PART III - TEST AND EVALUATION STRATEGY

3.1 T&E Strategy

Integrated testing is the collaborative planning and collaborative execution of test phases and events to provide shared data in support of independent analysis, evaluation and reporting by all stakeholders particularly the developmental (both contractor and government) and operational test and evaluation communities. The IPPS-A program will integrate DT and OT as much as practical.

In order to facilitate an integrated test strategy, external test agencies such as DOT&E, DASD(DT&E), DUSA(TE) and JITC are involved with the program early in the Systems Development Life Cycle (SDLC). External agencies provide input on requirements and technical reviews as well as assist in the development of DT plans and reports.

To achieve the required level of coordination between DT and the applicable test organizations (ATEC, JITC, ARL, etc.), it is the IPPS-A's strategy for external test organizations to influence DT test planning so the test organizations may leverage DT events as part of their plans and data gathering activities. An example of this coordination will be the participation of the OT testers in leveraging data gathered from government owned DT events to be utilized for their evaluation of IPPS-A functional capabilities for a given release.

Data collected from DT events will be made available to each team member's organization for evaluations specific to that team member's organization's role in the test event. The

organization's evaluations will be collected by the ITT and combined into a single evaluation that will be part of the final test event report.

IPPS-A strategy dictates that DIT, GAT and OT will be conducted in a "production-representative" environment. This allows for the testing environment to resemble the operational environment and allows for all data collected during the T&E events to be used to form a more comprehensive evaluation by the stakeholders.

Test metrics are continuously collected during the entire T&E activity and placed under CM control. This information, along with all other test artifacts are made available to all test agencies involved in the test and evaluation of IPPS-A. This sharing of data throughout the T&E activities provides the basis for the implementation of an integrated testing strategy. Figure 3-1 depicts the Integrated T&E Strategy and how data is shared throughout IPPS-A T&E activities.

Figure 3-1: IPPS-A Integrated T&E Strategy

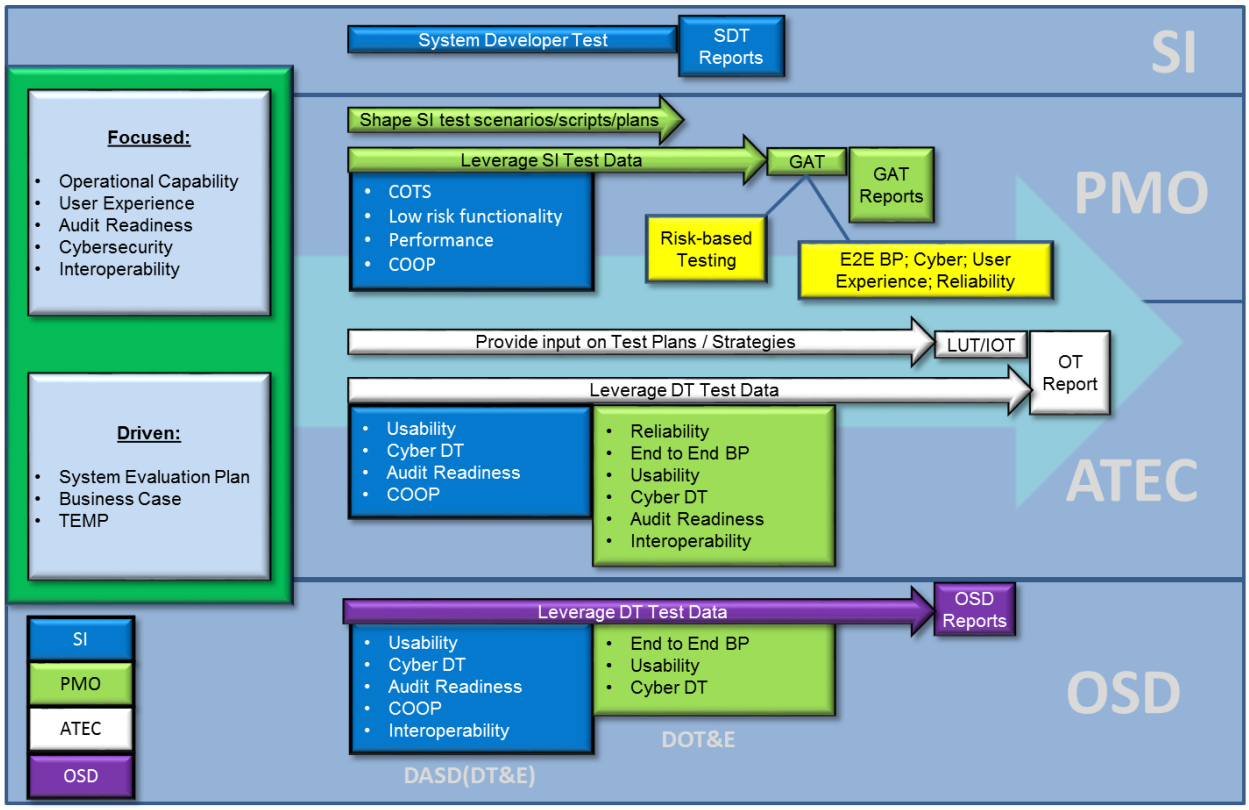

The T&E strategy consists of four phases for each Release, and within each phase there is a set of one or more test events. The four phases include:

- Design, Development, and Integration (DDI) Phase, consisting of Unit Level Test (ULT)
- System Developer Testing (SDT) Phase, consisting of the Product Level Test (PLT) and the Developers Integration Test (DIT) events
- GAT Phase, consisting of Capability Acceptance Test (CAT), System Integration Test (SIT), Software Qualification Test (SQT) and System Acceptance Test (SAT) events

- Operational Test (OT) Phase, consisting of the Limited User Test (LUT) (Releases 2, 3 and 5) and an Initial Operational Test and Evaluation (IOT) (Release 4)

Figure 3-2 below provides a high level view of test event inputs and outputs, and special test and certifications.

Figure 3-2: IPPS-A Increment II Test Inputs and Outputs

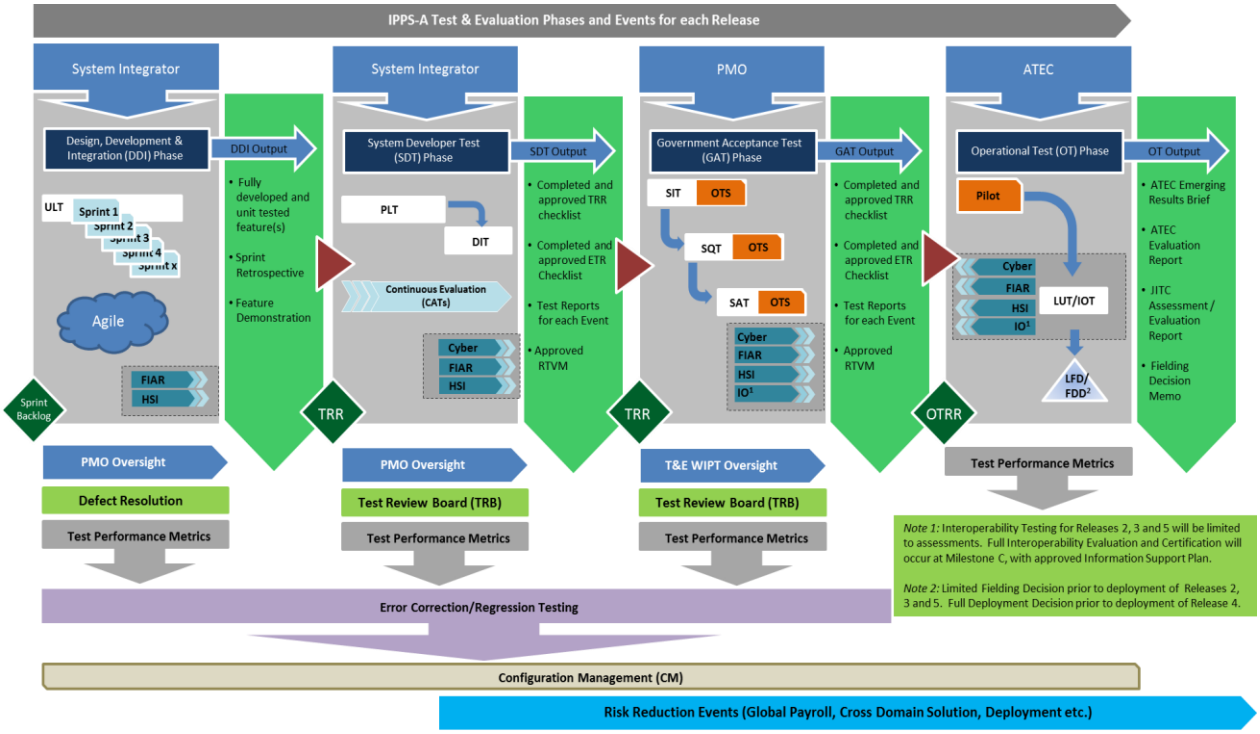

3.1.1 Decision Support Key

An important part of the T&E Strategy that informs leadership of acquisition strategy decisions is the Decision Support Key (DSK). The DSK depicted in Table 3-1 describes IPPS-A Releases 2 through 5 critical decision points and the information required to make those decisions.

Table 3-1: Decision Support Key

Decision	Description	T&E Information Needed
Decision #1 Release 2 Limited Fielding Decision	Incremental fielding of the software intensive programs. The MDA will determine the preliminary scope of the limited fielding.	SDT GAT LUT
Decision #2 Release 3 Limited Fielding Decision	Incremental fielding of the software intensive programs. The MDA will determine the preliminary scope of the limited fielding.	SDT GAT LUT
Decision #3 MS C	MDA led review at the end of the Engineering, Manufacturing and Development (EMD) Phase. Its purpose is to make a recommendation or seek approval to enter the Production and Deployment (PD) Phase.	SDT
Decision #4 Release 4 Full Deployment Decision	FDD is the decision made by the MDA acquisition program authorizing an increment of the software for operational use.	SDT GAT IOT
Decision #5 Release 5 Limited Fielding Decision	Incremental fielding of the software intensive programs. The MDA will determine the preliminary scope of the limited fielding.	SDT GAT LUT

3.2 Developmental Evaluation Approach

The IPPS-A Business Case document defines the IPPS-A requirements and reflects the critical components of the IPPS-A operational characteristics. The HLOs, BOs, POs and CDIs in this document reflect or are derived from the requirements presented in the BC document. The CTPs, listed in the Functional Baseline (FB) as technical requirements, are Release specific and are identified as such in Section 1.3.3 Key Capabilities. The PMO evaluation approach covers the four critical developmental issue areas: Performance, Interoperability, Cybersecurity, and Reliability. Through robust, integrated testing, the PMO will evaluate the functional areas of the system to include, Personnel and Pay Support, Human Systems Integration, Integrated Logistics Support, Net-Ready, RMF compliance and Cybersecurity, and Reliability. The program has developed a set of Decision Support Questions that when answered, will inform program decisions. A combination of MOPs and CTPs will answer the Decision Support Questions identified in the Developmental Evaluation Framework in Table 3-2.

The IPPS-A program office will maximize its use of empirical surveys where applicable. However, analytical or custom questionnaires will supplement additional assessments of the user experience. These questionnaires will be developed in accordance with the ARI Questionnaire Construction Manual (1989) and in accordance with industry, government, and academic best practices. For example, questionnaires developed for assessing the user experience during all User Juries are based on the Usability International Organization for Standardization, ISO 9241,

and Evaluating Usability of Human-Computer Interfaces (Johnson, G. and Ravden, S. 1989). These questions have been used in previous usability testing protocols in both industry and government and have been reviewed and vetted by the ARL HRED HSI-UX SME to ensure both internal and external validity.

Additional analytical questionnaires developed for the evaluation of IPPS-A effectiveness, suitability, and/or survivability, as needed, will follow similar methods of development to ensure internal and external validity IAW with academic and government best practices for survey development and administration. References for specific analytic or custom questions will be provided and initial questionnaires will undergo a formal review process within the T&E WIPT and the HSI-UX Internal Test Team (ITT). The review process will include participation from the HSI-UX SME and user representatives of current and/or former military.

The integrated T&E strategy detailed in Section 3.1 allows for the collaborative planning and execution of test phases and events to provide shared data in support of independent analysis, evaluation and reporting by all stakeholders, particularly the developmental (both SI and PMO) and AEC and OTC.

3.2.1 Developmental Evaluation Framework

The DEF articulates a logical evaluation strategy that identifies decision points. The DEF will answer how acquisition, programmatic, technical and operational decisions will be informed by evaluation, how the system will be evaluated, and how the test and milestone events will provide the data for evaluation. The release-specific Developmental Evaluation Framework for Releases 2 through 5 will be depicted in Annexes 1 through 4 respectively. The Milestone C Developmental Evaluation Framework is depicted in Table 3-2 below:

Table 3-2: IPPS-A Milestone C Developmental Evaluation Framework

Functional Evaluation Areas / Capability Areas	Key System Requirements and T&E Measures			Cross Reference	Acquisition/Program Decisions Supported						
					MS C						
	Requirements Document Reference	Description	Measure		Does IPPS-A provide support for the full range of personnel life-cycle activities and document all factors required to ensure proper pay functions necessary to be compliant with all applicable military pay and personnel regulations that support the Army with accurate, reliable and timely pay?	Is IPPS-A support capable of maintaining, integrating and operating Army personnel and pay business processes?	Is IPPS-A interoperable with interfacing networks and systems?	Does IPPS-A enable designated personnel, with the appropriate training, to easily perform required tasks for personnel and pay business processes?	Does IPPS-A provide adequate data and resource protection in its intended operational environment and is the system secure and survivable?	Is the system reliable, available and maintainable?	Is the system audit ready?
Performance											
Personnel and Pay Support	6.1.4	Single Multi-Component Service Record	**MOP HLO 1:** Number of Soldiers accounted for by more than one Component in a Present for Duty status.	HLO 1	SDT/GAT	SDT/GAT					
	6.1.1	Streamline Data Entry Process Using Single-Input, Near Real-Time Updating Capability	**MOP HLO 2.1:** Number of data fields requiring duplicate input to populate IPPS-A personnel and pay functionality.	HLO 2	SDT/GAT	SDT/GAT					
			MOP HLO 2.2: The SME and user ratings and feedback regarding single transaction update performance.		GAT	GAT					

Functional Evaluation Areas Capability Areas	Key System Requirements and T&E Measures			Cross Reference	Acquisition/Program Decisions Supported						
					MS C						
	Requirements Document Reference	Description	Measure		Does IPPS-A provide support for the full range of personnel life-cycle activities and document all factors required to ensure proper pay functions necessary to be compliant with all applicable military pay and personnel regulations that support the Army with accurate, reliable and timely pay?	Is IPPS-A support capable of maintaining, integrating and operating Army personnel and pay business processes?	Is IPPS-A interoperable with interfacing networks and systems?	Does IPPS-A enable designated personnel, with the appropriate training, to easily perform required tasks for personnel and pay business processes?	Does IPPS-A provide adequate data and resource protection in its intended operational environment and is the system secure and survivable?	Is the system reliable, available and maintainable?	Is the system audit ready?
	6.3.111	Pay Computation	**MOP CDI 1.1:** Proportion of accurately computed payroll calculation to the total number of payroll calculations attempted (including entitlements, deductions and benefits).	PO 2	SDT/GAT	SDT/GAT					
			CTP 004: The system shall process payroll and generate a pay disbursement file.		SDT/GAT	SDT/GAT					
	6.2.25	Support Net-Centric Military Operations	**MOP HLO 4:** Percentage of multi-Component strength information that is available for accounting and manning purposes upon updating and saving individual changes.	HLO 4	SDT/GAT	SDT/GAT					

Functional Evaluation Areas Capability Areas	Key System Requirements and T&E Measures			Cross Reference	Acquisition/Program Decisions Supported						
					MS C						
	Requirements Document Reference	Description	Measure		Does IPPS-A provide support for the full range of personnel life-cycle activities and document all factors required to ensure proper pay functions necessary to be compliant with all applicable military pay and personnel regulations that support the Army with accurate, reliable and timely pay?	Is IPPS-A support capable of maintaining, integrating and operating Army personnel and pay business processes?	Is IPPS-A interoperable with interfacing networks and systems?	Does IPPS-A enable designated personnel, with the appropriate training, to easily perform required tasks for personnel and pay business processes?	Does IPPS-A provide adequate data and resource protection in its intended operational environment and is the system secure and survivable?	Is the system reliable, available and maintainable?	Is the system audit ready?
	6.2.9	Data Retrieval	**CTP 002:** The system shall allow an authorized user to retrieve pre-defined personnel and pay data on individuals contained within the system.		SDT/GAT	SDT/GAT					
			CTP 003: The system shall allow an authorized user to retrieve pre-defined personnel and pay data on individuals contained within the system.		SDT/GAT	SDT/GAT					
	6.2.17	Provide Soldier a Self-Service Personnel and Pay Capability	**MOP HLO 8:** Number of online individual personnel and pay updates or requests available to the Soldier.	HLO 8	SDT/GAT	SDT/GAT					

Functional Evaluation Areas Capability Areas	Key System Requirements and T&E Measures			Cross Reference	Acquisition/Program Decisions Supported						
					MS C						
	Requirements Document Reference	Description	Measure		Does IPPS-A provide support for the full range of personnel life-cycle activities and document all factors required to ensure proper pay functions necessary to be compliant with all applicable military pay and personnel regulations that support the Army with accurate, reliable and timely pay?	Is IPPS-A support capable of maintaining, integrating and operating Army personnel and pay business processes?	Is IPPS-A interoperable with interfacing networks and systems?	Does IPPS-A enable designated personnel, with the appropriate training, to easily perform required tasks for personnel and pay business processes?	Does IPPS-A provide adequate data and resource protection in its intended operational environment and is the system secure and survivable?	Is the system reliable, available and maintainable?	Is the system audit ready?
	6.2.7	Improvement of Transaction Auditability	**MOP CDI 1.2-1**: The proportion of the successful number of required transaction written to an unalterable pre-defined audit tables to the total number of required transactions.	PO 6	SDT/GAT	SDT/GAT					SDT/GAT
			MOP CDI 1.2-2: The percentage of transactions initiated within IPPS-A that are successfully traced from initiation, approval, and posting, to include supporting documentation.		SDT/GAT	SDT/GAT					SDT/GAT

Functional Evaluation Areas Capability Areas	Key System Requirements and T&E Measures			Cross Reference	Acquisition/Program Decisions Supported						
					MS C						
	Requirements Document Reference	Description	Measure		Does IPPS-A provide support for the full range of personnel life-cycle activities and document all factors required to ensure proper pay functions necessary to be compliant with all applicable military pay and personnel regulations that support the Army with accurate, reliable and timely pay?	Is IPPS-A support capable of maintaining, integrating and operating Army personnel and pay business processes?	Is IPPS-A interoperable with interfacing networks and systems?	Does IPPS-A enable designated personnel, with the appropriate training, to easily perform required tasks for personnel and pay business processes?	Does IPPS-A provide adequate data and resource protection in its intended operational environment and is the system secure and survivable?	Is the system reliable, available and maintainable?	Is the system audit ready?
Human Systems Integration	15.7.0	Overall System Usability	**MOP CDI 3.1:** Percentage of favorable User opinion rating on System Usability Scale (SUS) on ease of use of IPPS-A applications and functions. Percentage of system design characteristics that adhere to HFE best practices guidelines and standards. ATEC SEP Usability metrics including mean number of tasks required to complete an end-to-end business process; and total number of steps required to complete a task.	HLO 8	GAT	GAT		GAT			

Functional Evaluation Areas Capability Areas	Key System Requirements and T&E Measures			Cross Reference	Acquisition/Program Decisions Supported						
					MS C						
	Requirements Document Reference	Description	Measure		Does IPPS-A provide support for the full range of personnel life-cycle activities and document all factors required to ensure proper pay functions necessary to be compliant with all applicable military pay and personnel regulations that support the Army with accurate, reliable and timely pay?	Is IPPS-A support capable of maintaining, integrating and operating Army personnel and pay business processes?	Is IPPS-A interoperable with interfacing networks and systems?	Does IPPS-A enable designated personnel, with the appropriate training, to easily perform required tasks for personnel and pay business processes?	Does IPPS-A provide adequate data and resource protection in its intended operational environment and is the system secure and survivable?	Is the system reliable, available and maintainable?	Is the system audit ready?
	15.7.0	Effectiveness	**MOP CDI 3.2:** Proportion of users able to complete each task on the first try without assistance or error.	HLO 8	GAT	GAT		GAT			
	15.7.0	Trainability	**MOP CDI 3.3:** Proportion of user and SME positive ratings. SMEs include PeopleSoft Consultants providing input to the design and training to the program office, and observer controllers (OCs).		GAT	GAT		GAT			
	15.7.0	Trust in Technology	**MOP CDI 3.4:** Proportion of user positive ratings.		GAT	GAT		GAT			

Functional Evaluation Areas Capability Areas	Key System Requirements and T&E Measures			Cross Reference	Acquisition/Program Decisions Supported						
					MS C						
	Requirements Document Reference	Description	Measure		Does IPPS-A provide support for the full range of personnel life-cycle activities and document all factors required to ensure proper pay functions necessary to be compliant with all applicable military pay and personnel regulations that support the Army with accurate, reliable and timely pay?	Is IPPS-A support capable of maintaining, integrating and operating Army personnel and pay business processes?	Is IPPS-A interoperable with interfacing networks and systems?	Does IPPS-A enable designated personnel, with the appropriate training, to easily perform required tasks for personnel and pay business processes?	Does IPPS-A provide adequate data and resource protection in its intended operational environment and is the system secure and survivable?	Is the system reliable, available and maintainable?	Is the system audit ready?
Integrated Logistics Support	8.0.0	Enterprise Administration	**MOP CDI 4.1:** System Administrator personnel rating and comments regarding the adequacy of software tools, system administration and user guides and administrative documentation to manage system and network configuration.	PO 7	GAT	GAT		GAT			
	6.2.21	Help Desk Support	**MOP CDI 4.2-1:** The SME and user rating and comments regarding adequacy for the helpdesk to resolve problems. SMEs include PeopleSoft Consultants providing input to the design and training to the program office, and observer controllers (OCs).		GAT	GAT		GAT			

Functional Evaluation Areas Capability Areas	Key System Requirements and T&E Measures			Cross Reference	Acquisition/Program Decisions Supported						
					MS C						
	Requirements Document Reference	Description	Measure		Does IPPS-A provide support for the full range of personnel life-cycle activities and document all factors required to ensure proper pay functions necessary to be compliant with all applicable military pay and personnel regulations that support the Army with accurate, reliable and timely pay?	Is IPPS-A support capable of maintaining, integrating and operating Army personnel and pay business processes?	Is IPPS-A interoperable with interfacing networks and systems?	Does IPPS-A enable designated personnel, with the appropriate training, to easily perform required tasks for personnel and pay business processes?	Does IPPS-A provide adequate data and resource protection in its intended operational environment and is the system secure and survivable?	Is the system reliable, available and maintainable?	Is the system audit ready?
			MOP CDI 4.2-2: Proportion of problems submitted that were resolved by the helpdesk within 4 hours (critical priority) or 24 hours (high priority) to all critical and high priority problems submitted.		GAT	GAT		GAT			
	6.3.130	Efficiency	**MOP CDI 4.3:** Proportion of user induced errors that were corrected/resolved without use of the help desk.		GAT	GAT		GAT			
Interoperability											

Functional Evaluation Areas Capability Areas	Key System Requirements and T&E Measures			Cross Reference	Acquisition/Program Decisions Supported						
					MS C						
	Requirements Document Reference	Description	Measure		Does IPPS-A provide support for the full range of personnel life-cycle activities and document all factors required to ensure proper pay functions necessary to be compliant with all applicable military pay and personnel regulations that support the Army with accurate, reliable and timely pay?	Is IPPS-A support capable of maintaining, integrating and operating Army personnel and pay business processes?	Is IPPS-A interoperable with interfacing networks and systems?	Does IPPS-A enable designated personnel, with the appropriate training, to easily perform required tasks for personnel and pay business processes?	Does IPPS-A provide adequate data and resource protection in its intended operational environment and is the system secure and survivable?	Is the system reliable, available and maintainable?	Is the system audit ready?
Net-Ready	6.1.7	Enter and be managed in the network	**MOP HLO 5:** Time required for the Soldier to connect to IPPS-A initial page, once his connection has reached the IPPS-A accreditation boundary (IPPS-A Data Center).	HLO 5	SDT/GAT	SDT/GAT	SDT/GAT				
	7.1.0	Data Exchanges (Joint Systems)	**MOP HLO 6.1:** Percentage of pay-impacting data elements received and accurately processed by IPPS-A IAW the SIA.	HLO 6	SDT/GAT	SDT/GAT	SDT/GAT				
			MOP HLO 6.2: Percentage of pay impacting data elements transmitted IAW the SIA.	HLO 6	SDT/GAT	SDT/GAT	SDT/GAT				

Functional Evaluation Areas Capability Areas	Key System Requirements and T&E Measures			Cross Reference	Acquisition/Program Decisions Supported						
					MS C						
	Requirements Document Reference	Description	Measure		Does IPPS-A provide support for the full range of personnel life-cycle activities and document all factors required to ensure proper pay functions necessary to be compliant with all applicable military pay and personnel regulations that support the Army with accurate, reliable and timely pay?	Is IPPS-A support capable of maintaining, integrating and operating Army personnel and pay business processes?	Is IPPS-A interoperable with interfacing networks and systems?	Does IPPS-A enable designated personnel, with the appropriate training, to easily perform required tasks for personnel and pay business processes?	Does IPPS-A provide adequate data and resource protection in its intended operational environment and is the system secure and survivable?	Is the system reliable, available and maintainable?	Is the system audit ready?
	7.1.0	Data Exchanges (Non-Joint Systems)	**MOP HLO 7.1:** Percentage of pay-impacting data elements received and accurately processed by IPPS-A IAW the SIA.	HLO 7	SDT/GAT	SDT/GAT	SDT/GAT				
			MOP HLO 7.2: Percentage of pay impacting data elements transmitted IAW the SIA.	HLO 7	SDT/GAT	SDT/GAT	SDT/GAT				
	7.1.0	Data Accuracy: Non pay impacting elements	**CTP 011:** The system shall provide non pay-impacting data to an external system.	BO 4	SDT/GAT	SDT/GAT	SDT/GAT				
			CTP 012: The system shall process non pay-impacting data received from an external system.		SDT/GAT	SDT/GAT	SDT/GAT				

Functional Evaluation Areas Capability Areas	Key System Requirements and T&E Measures			Cross Reference	Acquisition/Program Decisions Supported						
					MS C						
	Requirements Document Reference	Description	Measure		Does IPPS-A provide support for the full range of personnel life-cycle activities and document all factors required to ensure proper pay functions necessary to be compliant with all applicable military pay and personnel regulations that support the Army with accurate, reliable and timely pay?	Is IPPS-A support capable of maintaining, integrating and operating Army personnel and pay business processes?	Is IPPS-A interoperable with interfacing networks and systems?	Does IPPS-A enable designated personnel, with the appropriate training, to easily perform required tasks for personnel and pay business processes?	Does IPPS-A provide adequate data and resource protection in its intended operational environment and is the system secure and survivable?	Is the system reliable, available and maintainable?	Is the system audit ready?
			CTP 013: The system shall process system foundation data received from an external source.		SDT/GAT	SDT/GAT	SDT/GAT				
Cybersecurity											
SW & System Cybersecurity	8.0.0	RMF Compliance	**MOP CDI 2.1:** The system meets RMF requirements and IATT from the AO.	Program Protection Plan	SDT/GAT	SDT/GAT			SDT/GAT		
	8.0.0	Protect	**MOP CDI 2.2:** The implementation of the IPPS-A security controls at the Confidentiality, Integrity, and Availability (CIA) levels of Moderate, Moderate, Moderate, with an acceptable level of risk as determined by the AO and Security Control Assessor.		PLT (CVI)/SAT (CVPA)	PLT (CVI)/SAT (CVPA)			PLT (CVI)/SAT (CVPA)		

Functional Evaluation Areas / Capability Areas	Key System Requirements and T&E Measures			Cross Reference	Acquisition/Program Decisions Supported						
					MS C						
	Requirements Document Reference	Description	Measure		Does IPPS-A provide support for the full range of personnel life-cycle activities and document all factors required to ensure proper pay functions necessary to be compliant with all applicable military pay and personnel regulations that support the Army with accurate, reliable and timely pay?	Is IPPS-A support capable of maintaining, integrating and operating Army personnel and pay business processes?	Is IPPS-A interoperable with interfacing networks and systems?	Does IPPS-A enable designated personnel, with the appropriate training, to easily perform required tasks for personnel and pay business processes?	Does IPPS-A provide adequate data and resource protection in its intended operational environment and is the system secure and survivable?	Is the system reliable, available and maintainable?	Is the system audit ready?
	8.0.0	Detect	**CTP 006:** The system shall notify an authorized user of system security events.		DIT (Adversarial DT)	DIT (Adversarial DT)			DIT (Adversarial DT)		
	8.0.0	React and Restore	**MOP CDI 2.3:** IPPS-A capability to respond to detected intrusions and penetrations, exploitation of data, and/or attacks.		PLT (CTT) DIT (Adversarial DT)	PLT (CTT) DIT (Adversarial DT)			PLT (CTT) DIT (Adversarial DT)		
Reliability											
Reliability	6.1.5	Operational Availability	**MOP HLO 3.1:** Operational Availability (Ao).	HLO 3, Reliability Tracking Curve	DIT/GAT	DIT/GAT				DIT/GAT	
			MOP HLO 3.2: Mean Time Between System Aborts.		DIT/GAT	DIT/GAT				DIT/GAT	
			MOP HLO 3.3: Mean Time to Repair.		DIT/GAT	DIT/GAT				DIT/GAT	

Functional Evaluation Areas Capability Areas	Key System Requirements and T&E Measures			Cross Reference	Acquisition/Program Decisions Supported						
					MS C						
	Requirements Document Reference	Description	Measure		Does IPPS-A provide support for the full range of personnel life-cycle activities and document all factors required to ensure proper pay functions necessary to be compliant with all applicable military pay and personnel regulations that support the Army with accurate, reliable and timely pay?	Is IPPS-A support capable of maintaining, integrating and operating Army personnel and pay business processes?	Is IPPS-A interoperable with interfacing networks and systems?	Does IPPS-A enable designated personnel, with the appropriate training, to easily perform required tasks for personnel and pay business processes?	Does IPPS-A provide adequate data and resource protection in its intended operational environment and is the system secure and survivable?	Is the system reliable, available and maintainable?	Is the system audit ready?
	6.3.127	Concurrent users	**CTP 005:** The system shall support access to 40,000 concurrent users. Managers/Leaders: 25% Members (Self-Service): 50% POI/HR Specialists/Admin: 25%		DIT	DIT/GAT				DIT	
	14.2.2	Training System	**CTP 008:** The Institutional training system shall have the capability to receive a training data refresh.		DIT/GAT	DIT/GAT				DIT/GAT	
			CTP 010: The Operational training system shall have the capability to receive a training data refresh.		DIT/GAT	DIT/GAT				DIT/GAT	

Functional Evaluation Areas Capability Areas	Key System Requirements and T&E Measures			Cross Reference	Acquisition/Program Decisions Supported						
					MS C						
	Requirements Document Reference	Description	Measure		Does IPPS-A provide support for the full range of personnel life-cycle activities and document all factors required to ensure proper pay functions necessary to be compliant with all applicable military pay and personnel regulations that support the Army with accurate, reliable and timely pay?	Is IPPS-A support capable of maintaining, integrating and operating Army personnel and pay business processes?	Is IPPS-A interoperable with interfacing networks and systems?	Does IPPS-A enable designated personnel, with the appropriate training, to easily perform required tasks for personnel and pay business processes?	Does IPPS-A provide adequate data and resource protection in its intended operational environment and is the system secure and survivable?	Is the system reliable, available and maintainable?	Is the system audit ready?
			CTP 014: The Self Development/NET training system shall allow an authorized user to reset the training data set to its original state.		DIT/GAT	DIT/GAT				DIT/GAT	
			CTP 007: The Institutional training system shall allow an authorized user to reset the training data set to its original state.		DIT/GAT	DIT/GAT				DIT/GAT	
			CTP 009: The Operational training system shall allow an authorized user to reset the training data set to its original state.		DIT/GAT	DIT/GAT				DIT/GAT	

Functional Evaluation Areas Capability Areas	Key System Requirements and T&E Measures			Cross Reference	Acquisition/Program Decisions Supported						
					MS C						
	Requirements Document Reference	Description	Measure		Does IPPS-A provide support for the full range of personnel life-cycle activities and document all factors required to ensure proper pay functions necessary to be compliant with all applicable military pay and personnel regulations that support the Army with accurate, reliable and timely pay?	Is IPPS-A support capable of maintaining, integrating and operating Army personnel and pay business processes?	Is IPPS-A interoperable with interfacing networks and systems?	Does IPPS-A enable designated personnel, with the appropriate training, to easily perform required tasks for personnel and pay business processes?	Does IPPS-A provide adequate data and resource protection in its intended operational environment and is the system secure and survivable?	Is the system reliable, available and maintainable?	Is the system audit ready?
	6.2.15.1.7.3	Continuity of Operations: Data Replication	**CTP 001:** The system shall replicate data from the primary data center to a secondary data center upon the completion of the transaction.		DIT/GAT	DIT/GAT				DIT/GAT	
	6.1.5.2	Continuity of Operations: Failover/Disaster Recovery	**MOP CDI 4.4:** Time required to failover to a fully functional Secondary Data Center.		DIT	DIT				DIT	

3.2.2 Test Methodology

Several methods will be used to evaluate the design and development of IPPS-A. Common methodologies are depicted in Table 3-3 below:

Table 3-3: Developmental Test Methodology Matrix

Functional Evaluation Areas Capability Areas	Key System Requirements and T&E Measures		Test Methodologies
	Description	**Measure**	
Performance			
Personnel and Pay Support	Single Multi-Component Service Record	**MOP HLO 1:** Number of Soldiers accounted for by more than one Component in a Present for Duty status.	Query Specification-based testing
	Streamline Data Entry Process Using Single-Input, Near Real-Time Updating Capability	**MOP HLO 2.1:** Number of data fields requiring duplicate input to populate IPPS-A personnel and pay functionality.	Specification-based testing Operational Mission Scenarios Observation and survey
		MOP HLO 2.2: The SME and user ratings and feedback regarding single transaction update performance.	Observation and survey
	Pay Computation	**MOP CDI 1.1:** Proportion of accurately computed payroll calculation to the total number of payroll calculations attempted (including entitlements, deductions and benefits).	Parallel Payroll Comparison Specification-based testing Operational Mission Scenarios
		CTP 004: The system shall process payroll and generate a pay disbursement file.	Specification-based testing
	Support Net-Centric Military Operations	**MOP HLO 4:** Percentage of multi-Component strength information that is available for accounting and manning purposes upon updating and saving individual changes.	Specification-based testing Operational Mission Scenarios
	Data Retrieval	**CTP 002:** The system shall allow an authorized user to retrieve pre-defined personnel and pay data on individuals contained within the system.	Specification-based testing Operational Mission Scenarios
		CTP 003: The system shall allow an authorized user to retrieve pre-defined personnel and pay data on individuals contained within the system.	Specification-based testing Operational Mission Scenarios
	Provide Soldier a Self-Service Personnel and Pay Capability	**MOP HLO 8:** Number of online individual personnel and pay updates or requests available to the Soldier.	Specification-based testing Operational Mission Scenarios

Functional Evaluation Areas Capability Areas	Key System Requirements and T&E Measures		Test Methodologies
	Description	**Measure**	
	Improvement of Transaction Auditability	**MOP CDI 1.2-1**: The proportion of the successful number of required transaction written to an unalterable pre-defined audit tables to the total number of required transactions.	Specification-based testing Operational Audit
		MOP CDI 1.2-2: The percentage of transactions initiated within IPPS-A that are successfully traced from initiation, approval, and posting, to include supporting documentation.	Specification-based testing Operational Audit
Human Systems Integration	Overall System Usability	**MOP CDI 3.1:** Percentage of favorable User opinion rating on System Usability Scale (SUS) on ease of use of IPPS-A applications and functions. Percentage of system design characteristics that adhere to HFE best practices guidelines and standards. ATEC SEP Usability metrics including mean number of tasks required to complete an end-to-end business process; and total number of steps required to complete a task.	Observation and survey
	Effectiveness	**MOP CDI 3.2:** Proportion of users able to complete each task on the first try without assistance or error.	Observation and survey
	Trainability	**MOP CDI 3.3:** Proportion of user and SME positive ratings. SMEs include PeopleSoft Consultants providing input to the design and training to the program office, and observer controllers (OCs).	Observation and survey
	Trust in Technology	**MOP CDI 3.4:** Proportion of user positive ratings.	Observation and survey
Integrated Logistics Support	Enterprise Administration	**MOP CDI 4.1:** System Administrator personnel rating and comments regarding the adequacy of software tools, system administration and user guides and administrative documentation to manage system and network configuration.	Observation and survey

Functional Evaluation Areas Capability Areas	Key System Requirements and T&E Measures		Test Methodologies
	Description	**Measure**	
	Help Desk Support	**MOP CDI 4.2-1:** The SME and user rating and comments regarding adequacy for the helpdesk to resolve problems. SMEs include PeopleSoft Consultants providing input to the design and training to the program office, and observer controllers (OCs).	Observation and survey Help Desk Ticket Logs
		MOP CDI 4.2-2: Proportion of problems submitted that were resolved by the helpdesk within 4 hours (critical priority) or 24 hours (high priority) to all critical and high priority problems submitted.	Observation and survey Help Desk Ticket Logs
	Efficiency	**MOP CDI 4.3:** Proportion of user errors that were corrected/resolved without use of the help desk.	Observation and survey Help Desk Ticket Logs
Interoperability			
Net-Ready	Enter and be managed in the network	**MOP HLO 5:** Time required for the Soldier to connect to IPPS-A initial page, once his connection has reached the IPPS-A accreditation boundary (IPPS-A Data Center).	Server logs and queries
	Data Exchanges (Joint Systems)	**MOP HLO 6.1:** Percentage of pay-impacting data elements received and processed by IPPS-A IAW the SIA.	JITC/AIC Assessment/Evaluation
		MOP HLO 6.2: Percentage of pay impacting data elements transmitted IAW the SIA.	JITC/AIC Assessment/Evaluation
	Data Exchanges (Non-Joint Systems)	**MOP HLO 7.1:** Percentage of pay-impacting data elements received and processed by IPPS-A IAW the SIA.	JITC/AIC Assessment/Evaluation
		MOP HLO 7.2: Percentage of pay impacting data elements transmitted IAW the SIA.	JITC/AIC Assessment/Evaluation
	Data Accuracy: Non pay	**CTP 011:** The system shall provide non pay-impacting data to an external system.	JITC/AIC Assessment/Evaluation

Functional Evaluation Areas Capability Areas	Key System Requirements and T&E Measures		Test Methodologies
	Description	**Measure**	
	impacting elements	**CTP 012:** The system shall process non pay-impacting data received from an external system.	JITC/AIC Assessment/Evaluation
		CTP 013: The system shall process system foundation data received from an external source.	JITC/AIC Assessment/Evaluation
Cybersecurity			
SW & System Cybersecurity	RMF Compliance	**MOP CDI 2.1:** The system meets RMF requirements and IATT from the AO.	Inspection
	Protect	**MOP CDI 2.2:** The implementation of the IPPS-A security controls at the Confidentiality, Integrity, and Availability (CIA) levels of Moderate, Moderate, Moderate, with an acceptable level of risk as determined by the AO and Security Control Assessor.	Inspection Blue Team Assessment
	Detect	**CTP 006:** The system shall notify a privileged user upon the generation of an audit trail security event.	Specification-based testing Red Team Assessment
	React and Restore	**MOP CDI 2.3:** IPPS-A capability to respond to detected intrusions and penetrations, exploitation of data, and/or attacks.	Observation Cyber Tabletop Exercise Red Team Assessment
Reliability			
Reliability	Operational Availability	**MOP HLO 3.1:** Operational Availability (Ao).	Performance/stress testing System/server/maintenance logs TIRs/SPRs Reliability Tracking
		MOP HLO 3.2: Mean Time Between System Aborts.	Performance/stress testing System/server/maintenance logs TIRs/SPRs Reliability Tracking
		MOP HLO 3.3: Mean Time to Repair.	Performance/stress testing System/server/maintenance logs TIRs/SPRs Reliability Tracking

Functional Evaluation Areas Capability Areas	Key System Requirements and T&E Measures		Test Methodologies
	Description	**Measure**	
	Concurrent users	**CTP 005:** The system shall support access to 40,000 concurrent users.	Performance/stress testing TIRs/SPRs Reliability Tracking
	Training System	**CTP 008:** The Institutional training system shall have the capability to receive a training data refresh.	Observation System/server/maintenance logs TIRs/SPRs Reliability Tracking
		CTP 010: The Operational training system shall have the capability to receive a training data refresh.	Observation System/server/maintenance logs TIRs/SPRs Reliability Tracking
		CTP 014: The Self Development/NET training system shall allow an authorized user to reset the training data set to its original state.	Specification-based testing Observation and survey
		CTP 007: The Institutional training system shall allow an authorized user to reset the training data set to its original state.	Specification-based testing Observation and survey
		CTP 009: The Operational training system shall allow an authorized user to reset the training data set to its original state.	Specification-based testing Observation and survey
	Continuity of Operations: Data Replication	**CTP 001:** The system shall replicate data from the primary data center to a secondary data center upon the completion of the transaction.	Observation System/server/maintenance logs TIRs/SPRs Reliability Tracking
	Continuity of Operations: Failover/Disaster Recovery	**MOP CDI 4.4:** Time required to failover to a fully functional Secondary Data Center.	Observation System/server/maintenance logs TIRs/SPRs Reliability Tracking

3.2.3 Modeling & Simulation

3.2.3.1 Interoperability

In the event that an actual interface cannot be connected to IPPS-A during developmental testing, a simulated interface, provided by the interface owner, will be used. If so, additional information will be provided in the appropriate detailed test plan.

3.2.3.2 Performance

Individual performance tests will be run during SDT and GAT phases that will provide results such as response time vs. specific load conditions. These results will be collected and analyzed, and statistical methods may be employed to produce a model, such as a set of graphical curves that will depict the relationship between these parameters. Data such as Central Processing Unit (CPU) usage vs. specific loads resulting from these tests may also be captured. The performance tests will be conducted using the Government furnished HP Performance Center suite.

3.2.3.3 Reliability

During SAT, automated test scripts will be run utilizing HP Unified Functional Tester (UFT) to simulate a realistic load for the purpose of accumulating hours to support the Reliability assessment. UFT will be run outside of normal testing hours, to include nights and weekends to emulate realistic operating conditions. See APPENDIX F for more detailed information on Reliability testing.

3.2.3.4 Cybersecurity

The PMO plans to utilize a cyber range capability to perform early evaluation of the system's cyber security posture during PLT for all releases. This will include identifying potential cyber-attack avenues, blue team vulnerability assessments, adversarial assessments and the validation of critical operational mission threads. Planning is currently underway to build out a closed loop cyber range, including a production-representative IPPS-A instantiation to provide robust, continuous evaluation of the system's cybersecurity capabilities. See APPENDIX E for detailed information on Cybersecurity testing.

3.2.4 Test Limitations and Risks

There are no known test limitations related to IPPS-A Increment II testing activities. However, as Release details become available, any identified Release specific limitations will be added to the appropriate Annex to the document.

3.3 Developmental Test Approach

The DT for IPPS-A is comprised of two phases: SDT and GAT for each Release. The performance, technical, functional, security, and interoperability characteristics of the system (hardware, software, interfaces and communications) are verified through developmental testing to ensure that all capabilities and requirements of the system are exercised and analyzed. In addition, DT for an ERP based solution requires a verification of the PeopleSoft® code and evaluation of the configuration and integration of the PeopleSoft objects. The IPPS-A DT will be based on the critical mission threads, the documented business processes, and the testing of PeopleSoft objects. Details of how this will be performed will be contained in the detailed test plans for each release developed by the SI and the IPPS-A Test Team.

Additionally, during the DT, the SI performs data conversion activities. In conjunction with these activities, the PMO T&E team and the SI will conduct data validation of the converted data to ensure the data was converted in accordance with the design documentation. Additional details of the data validation activities are also included in APPENDIX D .

After the completion of the final PLT, the SI will perform a DIT prior to providing the system to the Government for GAT activities. The GAT Phase may include CAT, SIT, SQT, and SAT activities. After successful completion of the GAT, the system will be turned over to ATEC for operational testing. All transitions between the test phases will follow proper configuration management procedures to ensure stability of the IPPS-A baseline.

The GAT events (which include CAT, SIT, SQT, and SAT) are owned and conducted by the Government during each of the Releases. The purpose of GAT is for the Government to reduce risk and gain enough confidence in the system's capability so, at the conclusion of GAT, the system can be declared ready for OT. During the GAT event, ATEC may conduct Operational Test Segments (OTSs).

The CAT activities, which are a GAT Phase test event, will be conducted concurrently with the PLTs. Within each CAT, a series of tests will be conducted by the IPPS-A PMO T&E team as described in Section 3.3.2.4**.** As errors are detected, they will be reported to the SI for correction. After correction and testing by the SI, the fix will be provided to the IPPS-A PMO T&E team for testing during the current or subsequent CATs. As more capabilities are provided, the IPPS-A PMO T&E team will continually perform regression testing to ensure no additional errors have been introduced as a result of the fixes and other delivered capabilities.

During these CATs, the test community will perform continuous evaluation and gather data that can be applied to accreditations and certifications required for FDD for Release 4. ATEC may also conduct OTSs during each CAT event.

The PMO T&E Branch will conduct formal TRRs prior to all PMO test events. The PMO test team will develop a TRR checklist and include it in the detailed test plan for each event. The entrance criteria checklist will contain the T&E organization and name of the individuals who will have the overall responsibility for the completion of each checklist item. The T&E Stakeholders will be kept abreast of the status of all on actions associated with the TRR checklist. Prior to TRR, the individuals listed in the checklist will conduct an evaluation to ensure all TRR checklist items will be satisfied. The PMO test team will provide necessary test artifacts to the TRR individuals prior to the TRR in order to allow sufficient time for their evaluation. Any issues indicating negative results for the TRR may require postponing the TRR until all issues can be successfully resolved. The T&E Stakeholders will be given daily access to all test artifacts prior to TRR. A similar methodology will be used to conduct the formal ETR at the conclusion of the PMO test events. The ETR checklist will also be included in the detailed test plan for each PMO test event.

The SDT phase will inform the PM of the readiness of IPPS-A to proceed to GAT based on the DIT exit criteria. The SAT event will inform the PM of the readiness of IPPS-A to proceed to LUT or IOT. The details of each test event during SDT and GAT phases will be described in the appropriate individual detailed test plans. A high-level description of the test events during SDT and GAT can be found in Section 3.3.2, Developmental Test Events and Objectives.

The test scripts for IPPS-A Increment II functional testing and data validation will be developed by the IPPS-A T&E Branch and the SI using the methodology described in APPENDIX D .

3.3.1 Mission-Oriented Approach

The DIT and all GAT test events will be performed on the production-representative environment for Releases 2 through 5. Testing on the production-representative environment allows for a strategy that can minimize risk and provide a high degree of confidence in the operational effectiveness and suitability of the delivered system. The ability of the system to satisfy all requirements and technical parameters will be analyzed early during the CAT and GAT events in the production-representative environment for each Release.

The FMD will develop Operational Mission Scenarios that provide an opportunity to evaluate the interaction of IPPS-A capabilities to support user needs based upon real-world events. The Operational Mission Scenarios will present a real-world event, activity, and/or demand that can be supported by capabilities required of the system. These events will present activities that would be performed both inside and outside of the system. By leveraging the Operational Mission Scenarios for the design, development and testing of the system, the PMO will ensure that end-users receive the capabilities needed to support the Army's HR and payroll mission. The PMO T&E Team will leverage FMD-developed Operational Mission Scenarios during GAT phase test events to conduct an operationally realistic, mission-based evaluation of the system.

3.3.2 Developmental Test Events and Objectives

The IPPS-A Increment II T&E Strategy separates DT into two phases; SDT and GAT. The term System Developer (SD) is synonymous with the term SI. The System Developer Testing (SDT) Phase includes two tests events, PLT and DIT, owned and conducted by the SI. During the SDT phase, the IPPS-A T&E Branch will conduct CATs, which are test events that are part of the GAT phase. Developmental testing will be conducted in a test environment that represents the operational environment as closely as possible. DT will be conducted on a production-representative environment, including all applicable interfaces for each Release.

The Government Acceptance Testing (GAT) Phase includes all Government sponsored testing of the IPPS-A Increment II product baseline for each Release. GAT phase testing includes technical, functional, and instances of integrated OTSs consistent with OSD guidance on the implementation of an integrated DT/OT testing strategy. These OTSs are defined as data collection events conducted by ATEC during the GAT events to independently assess the impact of GAT results on plans for fielding.

The IPPS-A PMO staff will coordinate, as needed, with external stakeholders and interface partners for all certification and accreditation test events during GAT. All GAT phase test events, with the exception of CAT events, will be conducted on the production-representative environment. The CAT events will be conducted in a test environment that simulates the production environment with the required interfaces but with less capacity.

SDT and GAT phase test events for each Release, will:

- Verify the engineering progress status;
- Verify that design risks have been minimized;
- Verify that anti-tamper provisions have been implemented;
- Substantiate achievement of contract technical performance requirements;

- Provide tangible evidence that IPPS-A Increment II is ready for operational testing during SAT;
- Identify any technology/subsystem that has not demonstrated its ability to contribute to system performance and ultimately achieve the desired mission capabilities;
- Identify the degree to which system hardware and software design has stabilized to reduce operational uncertainties.

In order to achieve these objectives, each test event will measure and assess one or more of the following:

- The appropriate technical parameters;
- Functionality;
- Performance and capacity;
- RAM;
- Data conversion, validation, and loading;
- Interoperability – external interfaces;
- Cybersecurity;
- Production control;
- Data integrity;
- Help Desk;
- Training;
- User access roles and permissions;
- Human Systems Integration.

Prior to initiating SDT, the system is designed and developed during the DDI phase. The DDI phase is broken down into multiple build cycles. The only activity within this phase directly related to T&E is the ULT. ULT will be conducted by the SI for each hardware and software CI developed within a build cycle. After a unit is completed and tested, it will be placed under CM control and managed by the SI's and the Government's CM staffs throughout its life-cycle. At the completion of the first build cycle, a TRR is conducted and after a successful review, the SDT phase is initiated. As each incremental build cycle is completed, the code or configuration is migrated into a test environment for SDT.

3.3.2.1 Developmental Test Events Common Entrance and Exit Criteria

All DT events have common entrance and exit criteria. The following common entrance and exit criteria will be reviewed and confirmed as being satisfied prior to each test event to ensure the test process runs effectively and efficiently:

Common Entrance Criteria

- The previous test event has successfully met all test objectives and exit criteria;
- All Severity 1 and 2 SPRs have been closed and all Severity 3 SPRs have government approved workarounds in place;

- The previous test event draft test report, to include root cause analysis of all anomalies, has been completed;
- Test preparation materials are completed and approved;
- The test event plan is completed and approved;
- Test Scenarios reflecting end-to-end business processes, if appropriate, are completed and approved;
- Test Scripts, if appropriate, are completed and approved;
- Test execution training materials are approved and available;
- Training of testers and test players completed;
- All required IPPS-A Increment II interfaces for the test event, as defined in the test event test plan, are functioning properly;
- The applicable testing environment is set-up, configured, baselined, audited, and ready for the appropriate test event;
- Dry-run has been executed to ensure that the testing environment is stable;
- Technical support is dedicated for the testing environment;
- Test tools are installed, configured and verified end-to-end;
- Test environments have been populated with migrated/converted/validated data appropriate for the test event;
- Responsibilities for system operations and support functions (i.e., batch processing, etc.) have been assigned and processes are in place;
- Metrics collection processes are communicated to the test group;
- Test processes and procedures have been established and communicated to the test group.

Common Exit Criteria

- Successful accomplishment of all test objectives, including test scripts and scenarios;
- Resulting test artifacts are complete;
- Documentation redlines have been incorporated into the applicable documents and are under configuration control;
- All applicable IPPS-A Increment II interfaces, as defined in the test event test plan, have been tested and are functioning properly;
- All Severity 1 or 2 SPRs have been closed;
- All Severity 3 SPRs have government approved workarounds in place.

The detailed entrance and exit criteria, along with any unique criteria will be provided in the detailed test plans for each test event and for each release.

3.3.2.2 Product Level Test

The Product Level Test (PLT), conducted during the System Developer Test phase is the testing of CIs, including the integration of dependent CIs, performed by the SI in a test environment.

The objective of Product Level Test is to verify that each CI meets the requirements and/or performs as expected. The test team will be independent of the developers/engineers/testers that developed and tested the units during ULT. The PLT requires an overall formal test plan with entrance and exit criteria (Section 3.1.1) that guides the PLT event for all CIs. In addition, test scripts and/or procedures will be developed for each CI and the integrated set of dependent CIs. IPPS-A PMO staff will review and approve the test plan, the test scripts and/or procedures, and the test report. IPPS-A PMO staff will also provide coordination, as needed, with external stakeholders and interface partners. In addition, the last PLT event includes the testing of the migration of the IPPS-A Increment II CIs into an integrated test environment in preparation for full integration and interoperability testing during DIT.

3.3.2.3 Developer Integration Test

The Developer Integration Test (DIT), conducted during the System Developer Test phase is the testing of the fully integrated system (to include all hardware and software CIs, external interfaces, etc.). The DIT is conducted by the SI's autonomous T&E Team. IPPS-A Increment II T&E strategy requires an overall formal test plan with specific entrance and exit criteria that guides the DIT event. IPPS-A PMO staff will review and approve the test plan, the test scripts and/or procedures, and the test report. IPPS-A PMO staff will also provide coordination, as needed, with external stakeholders and interface partners. The overall test objective for DIT is to verify that IPPS-A Increment II is ready for GAT.

There are no unique entrance criteria.

Unique exit criteria:

- Requirements Traceability Verification Matrix (RTVM) completed and delivered.

3.3.2.4 Capability Acceptance Test

Capability Acceptance Test (CAT), conducted by the PMO T&E Branch during the GAT phase is an independent and early validation of 1) high priority and 2) highly complex capabilities. FMD will prioritize capabilities (high, medium, low) based on functional needs and the developer will assess the level of complexity (high, medium, low) based on level of effort to build functionality. Based on Design of Experiment, the PMO T&E Branch will assess those high/high and high/medium capabilities and compare results with the SI tester's results. Favorable results on both sides will indicate a potential for leveraging SI PLT or DIT data to inform GAT reports.

Although the CAT is part of the GAT phase, CAT will be initiated at the start of PLT, and will conclude prior to the start of SIT. The IPPS-A T&E strategy requires a single detailed test plan (to include entrance and exit criteria) that guides the CAT. The IPPS-A PMO T&E Branch, with support from the ITT, as required, will develop the test plans, test scenarios, test scripts, and test report.

As errors are detected, they will be reported to the SI for correction. After correction and unit testing by the SI developers, the fix will be provided to the IPPS-A T&E and the SI independent T&E team for testing during the CAT. As more capabilities are provided, the IPPS-A T&E team and the SI T&E Team will continually perform regression testing to ensure no additional errors have been introduced as a result of the fixes and other delivered capabilities.

An additional focus of CAT is usability. User Juries and Guerilla Usability Testing will be conducted during the CAT phase and will be detailed in the HSI-UX test plan.

Guerrilla Usability Testing has been described as the "art of pouncing on lone people in cafes and public spaces, and quickly filming them while they use a website for a couple of minutes". It's also been described as "low-budget usability, a quick user interaction involving one or two questions aimed to answer a specific research question". The PMOs approach to Guerrilla Usability Testing is reaching out to a wide, targeted audience, demonstrating system capability, and then asking for feedback. Via STRATCOM email message, the PMO will target specific users en masse, whether HR Specialists, Soldiers or Leaders to view a Unit Productivity Kit (UPK) demonstration of a capability or feature, and follow up with a short survey. This method reaches a much larger audience then the traditional User Juries and can be valuable in improving the application and thereby the user's experience.

3.3.2.5 System Integration Test

System Integration Test (SIT), conducted during the GAT phase is the testing of the fully integrated system conducted by the IPPS-A PMO T&E Branch as the lead with the support of the ITT, the functional proponent and other stakeholders as required. IPPS-A T&E strategy requires an overall formal test plan, (to include entrance and exit criteria), that guides the SIT event. The PMO T&E Branch, with the support of the ITT, will write the test plan, test scenarios, test scripts, and test report.

The PMO T&E Team will leverage FMD-developed Operational Mission Scenarios to conduct an operationally realistic, mission-based evaluation of the system.

Special entrance criteria:

- RTVM completed and delivered.

3.3.2.6 Software Qualification Test

System Qualification Test (SQT), conducted during the GAT phase is the verification of the fully integrated system conducted by the IPPS-A PMO T&E Branch, supported by the ITT, with functional proponents and end user participation. IPPS-A PMO T&E strategy requires an overall formal test plan (to include entrance and exit criteria) that guides the SQT event. With the assistance and input from the ITT, the IPPS-A PMO T&E Branch will write the detailed test plan and test report. The Army G-1 FMD staff, with ITT assistance, will identify and write the test scenarios focusing on the end-to-end testing of the IPPS-A system as it relates to the IPPS-A Increment II capabilities.

Unique exit criteria:

- Updated RTVM.

3.3.2.7 System Acceptance Test

System Acceptance Test (SAT), conducted during the GAT phase is the test and evaluation of the fully integrated system, to include all the applicable interfaces using typical end users in their operational environment. The test is planned, organized, conducted, and led by the IPPS-A PMO T&E Branch with the assistance of the ITT. The SAT event requires a detailed test plan that will

be written by the IPPS-A T&E Branch with support by the ITT. Data, server logs, and maintenance logs collected from these tests will be made available to each team member for evaluations specific to the ITT member's role in SAT. The SAT informs ATEC as to the readiness of the system for each LUT and IOT.

The PMO T&E Team will provide test participants with FMD-developed Operational Mission Scenarios to conduct an operationally realistic, mission-based evaluation of the system.

Special entrance criteria:

- Updated RTVM.

Unique exit criteria:

- Updated RTVM.

3.3.2.8 Reliability Tracking

During DT events TIRs, help desk tickets, and SPRs will be tracked in ALM. IPPS-A Server logs and maintenance logs will also be used as data sources for the RAM evaluation. Each SPR, TIR, and/or incidents from server logs will be officially scored via the IPPS-A RAM Scoring Conference using the user's FD/SC as a guide. Details on IPPS-A Reliability can be found in APPENDIX F.

3.3.2.9 Cybersecurity DT&E

In accordance with DASD(DT&E) Guidelines for Cybersecurity DT&E, v1.0 and the DoD Cybersecurity Test and Evaluation Guidebook, v1.0 IPPS-A PMO will conduct robust, continuous evaluation of the system's maturing cybersecurity posture during DT. Details on Cybersecurity DT&E can be found in APPENDIX E .

3.3.2.10 Operational Test Segments (OTS)

Operational Test Segments may be conducted during each GAT phase test event and will consist of ATEC observation, surveys, questionnaires, interviews and review of test data collected during the test event. ATEC will survey the system users operating the system whether it is a contractor, military user, or a civilian. The surveys may address the following areas: Test Preparation, Test Environment, Test Conduct, Test Outcome, and Post-Test Plan. Results of all surveys will be aggregated to give an overall perspective of the preparation, outcome, and maturity of the System Under Test (SUT) to include system usability. Additionally, system usability will be determined from instrumentation and the System Usability Scale (SUS) where possible. OTSs inform ATEC Systems Team of the readiness of IPPS-A Increment II to enter OT.

3.4 Certification for Limited User Test and Initial Operational Test

The IPPS-A PMO will be using the web-based test tool HP ALM to record test results and defects that will be generated when executing scripts and scenarios during DT. The AEC evaluator will be given access to this tool to be able to perform analysis of the expected system performance against all Issues, CTPs and HLOs. The PMO Test Team will produce test reports at the conclusion of each DT phase that will give the evaluator some insight that the system is progressing to a successful OT. The OTC may collect survey information during the DT phase.

These will be collected specifically to be able to give all organizations confidence that IPPS-A is on the glide path to accomplish a successful OT.

The entrance criteria for OT, listed in Table 3-4, will require IPPS-A to be fully operational. This will include all live interfaces, a fully integrated database, all DT completed, all required documentation approved, and all test participants fully trained.

Table 3-4: LUT and IOT Entrance Criteria

Criteria	Requirement
The TEMP is current and approved.	LUT/IOT
Operational Test Plan has been approved by DOT&E.	LUT/IOT
GAT results indicate DT, including criterion from Cybersecurity objectives and performance thresholds identified in the TEMP have been satisfied.	LUT/IOT
PMO certifies that all significant areas of risk have been identified and corrected or mitigation plans are in place.	LUT/IOT
System operating, maintenance, and training documents have been provided to the ATEC 30 days prior to LUT/IOT.	LUT/IOT
All resources required, to include support, to execute LUT/IOT have been identified and are available.	LUT/IOT
The IPPS-A is the system of record for the IOT.	IOT
The system provided for LUT/IOT, including software, is production.	LUT/IOT
Threat information/assessment (e.g. threat system characteristics and performance, electronic countermeasures, force levels, scenarios, and tactics), to include security classification, Threat Computer Network Operations Team selection, threat manager selection, TTSP developed, and Threat Accreditation Working Group conducted, required for LUT/IOT is available to satisfy the ATEC test planning.	LUT/IOT
Data successfully migrated to establish the single IPPS-A database. Data should meet the data integrity requirement in the Interoperability HLO.	LUT/IOT
All interfaces that support the system are available to transmit and/or receive at appropriate intervals, properly formatted data IAW the respective Systems Interface Agreements.	LUT/IOT
IPPS-A functionality includes all business processes intended for that release.	LUT/IOT
No Severity 1 and 2 SPRs exist, or waivers provided. All Severity 3 SPR workarounds have been documented and approved by the Service proponents. There are no outstanding SPRs that: • Prevent the accomplishment of an essential capability; • Jeopardize safety, security, or other requirements designated "critical"; • Adversely affect the accomplishment of an essential capability and no work-around solution is known; or • Adversely affect technical, cost, or schedule risks to the project or to life-cycle support of the system, and no work-around solution is known.	LUT/IOT
JITC concurs that program Net-Readiness demonstrated in development has progressed sufficiently for the OT to be conducted.	LUT/IOT

Criteria	Requirement
The appropriate authority has approved the Information Support Plan (ISP).	LUT/IOT
The AO has determined the Confidentiality, Integrity, and Availability (CIA) levels for IPPS-A to be "Moderate, Moderate, Moderate" until Release 3. At Release 3, a classified variant, IPPS-A-Secure Internet Protocol Routed Network (IPPS-A-S) will be fielded and the CIA categorization will rise to "High, High, Moderate." However, only the controls associated with the "Moderate, Moderate, Moderate" categorization baseline will apply to the unclassified IPPS-A variant. Cybersecurity system certification accreditation documents including the AO approved System Security Authorization Agreement (SSAA) and ATO, or Interim Authority to Test (IATT) have been provided to ATEC.	LUT/IOT
Test Unit Representatives certify they are ready for OT; test unit personnel (operators and maintainers) are trained and committed for the duration of the test	LUT/IOT
The PMO ensures that all IPPS-A military and civilian support personnel (maintainers, help desk, and testers) involved with the OT have been trained and committed for the duration of the test.	LUT/IOT

OT segments will coincide with developmental testing and will collect data to independently assess whether or not DT was successful in keeping the program on track with the overall plan and that operational mission "rigor" increased with each succeeding DT event.

As required prior to the actual OT, a formal pilot test will be conducted to exercise IPPS-A in the actual operational environment. Data collected during the pilot will be used to compare the actual performance of the system with performance requirements to independently assess the readiness of IPPS-A for OT. The OTRR 3, chaired by the Operational Test Command (OTC) Commander, will be the final decision point on whether to begin the OT.

3.5 Operational Evaluation Approach

During the IPPS-A OT&E phase, ATEC will conduct a LUT for Releases 2, 3 and 5 and an IOT for Release 4 to determine whether the system is operationally effective, suitable, and survivable.

For the IPPS-A OT&E phase, ATEC will implement Design of Experiments concepts in order to incorporate best practices for testing of ERP systems. Among the best practices concepts to be included in Design of Experiments will be:

- **Section "231 Report" Considerations:** Incorporates best practices as defined by:
  - Focus on measuring improvements to capability and operational support;
  - Experiment to learn strengths and weaknesses;
  - Integrate developmental and operational testing;
  - Start early, be operationally realistic and continue through the life-cycle;
  - Evaluate in mission context at time of fielding;
  - Compare to current mission capabilities;
  - Use all available information.
- **Common Instrumentation:** Enables the PMO and OTAs to conserve resources through the multiple reuse of test tools and instruments in DT and OT;

- **Isolation of key responses and factors to address key performance measures;**
- **Selection of an appropriate DOE methodology**: Includes covering arrays, D or I-optimal designs, and/or orthogonal arrays for various test events and test types;
- **Determine sample size for each test type based on confidence and power calculations**.

After completion of the Army LUTs or IOT, ATEC will develop an ERB, OMAR, OAR or OER, which reports on the system's operational effectiveness, suitability and survivability. These reports will be provided to the MDA to support the Army's fielding decisions. If required, ATEC will conduct CE to verify any additional functionality untested during the LUTs or IOT.

Per DOT&E guidance, ATEC conducted a Risk Assessment for IPPS-A Increment II to determine the appropriate level of independent OT. The Risk Assessment for IPPS-A Increment II, dated 3 October 2014, determined that Level III OT is appropriate due to the critical capability the system will provide, the complexity of the system, and the sensitivity of the data contained in the IPPS-A database. Level III OT is the most comprehensive level of OT and requires an independent, dedicated OT event to assess operational effectiveness, suitability, and survivability. This OT will encompass protect, detect, react, and restore cyber defense functions. The attacks will be directed at both end users and network with overall objective to determine impact on mission capabilities.

ATEC will conduct an OT to determine if IPPS-A has the potential to be operationally effective, suitable, and survivable. JITC will conduct an IOP Evaluation and will provide a Joint Interoperability Certification or Joint Interoperability Certification with Conditions, as applicable, and provide a Joint Interoperability Certification Report, based on operational test data.

The OT will be conducted with all applicable Army components. The OT will be conducted on the IPPS-A production-representative system using typical users to perform the normal duty activities using IPPS-A. The OT will have an overall formal test plan (to include entrance criteria) that will guide the OT.

The Human Systems Integration evaluator will convene and conduct a Human Systems Integration Analysis Conference after the OT. The conference will address any Human Systems Integration related concerns influencing the ability of users to operate or support the system to accomplish their mission and any other Human Systems Integration related issues. Participants will include representatives of the materiel developer, the operational evaluator, the test agency and the user community. The conference participants will assign a rating of "critical," "major," or "minor" to each Human Systems Integration related issue.

During OT events, ATEC will receive Data Center server logs, security logs, maintenance logs and other monitoring reports from the PM. In addition, ATEC will be provided the status and operating hours for the data centers, scheduled and unscheduled downtime/maintenance actions (to include IPPS-A's planned maintenance schedule prior to the start of test), trouble tickets, help desk tickets, and SPRs. TIRs will be collected by OTC. The ATEC RAM evaluator will convene and conduct a RAM scoring conference during or after the OT.

OTC will be granted control on any patches or software changes proposed by the PdM prior to the start of Pilot test. OTC will produce a Software Configuration Control Plan that will be co-signed by the PdM and Director, Mission Command Test Directorate. The plan will create a Configuration Control Board (CCB) that will review all proposed software changes that will come out of the PdM CCB. The OTC CCB must approve all software changes and patches being recommended by the PdM CCB prior to their implementation.

3.5.1 Operational Test Events and Objectives

The OT objectives will be met during the OT event, which is comprised of a Pilot Test and Record Test. Following are descriptions of both events.

3.5.1.1 Pilot Test

The pilot test will be a set duration and will be executed to mirror the record test. A pilot test must always be conducted prior to the actual OT. The primary purpose of the pilot test is to validate test procedures, test data collection and reduction procedures. These procedures include assessing the organization of the test team, validating the test scenario, verifying the adequacy of data collection forms and instrumentation, exercising the support system, and confirming all planned communication and control procedures. Additionally, the Pilot Test will determine if the SUT is performing in a manner that is consistent with the claims made for it. The pilot test will be conducted early enough to allow for reaction and correction of minor deficiencies. Data collected during the training and the pilot test may or may not be considered valid. If any of the data from the pilot test is used as data in the test report, it must be obtained under the same test conditions as the record trials. The pilot test will determine if the record test is conducted, suspended or terminated.

3.5.1.2 Record Test

The Record Test is designed to collect data on the suitability, survivability, and performance of the system as it interacts with users and other systems to accomplish tasks in support of Soldiers conducting day-to-day, real-world mission requirements. As the Record Test proceeds, the data collected will be processed for review by the Data Authentication Group (DAG). All TIRs written during testing will be sent to the Reliability, Availability, and Maintainability Scoring Conference (RSC) for scoring of chargeability and causality using the established FD/SC as a guide for scoring. A series of quick look reports will be updated daily to give the key stakeholders and ATEC daily "snapshots" of the system's performance against the established threshold requirements. Specific opinions concerning key aspects of system performance will be solicited from the test participants and SMEs upon completion of testing.

- **Configuration Description**: IPPS-A infrastructure includes all software and hardware that will be in a production system configuration in a production-representative environment "Go Live";
- **Objectives**: The purpose of the Army OT is to address IPPS-A capabilities and limitations with respect to the system life-cycle functions and operational profiles, in order to determine the system's Effectiveness, Suitability and Survivability (ESS) under realistic operational conditions for the Army. Successful accomplishment of all OT and an evaluation of findings for the potential of ESS will support a recommendation for fielding to the Army. Following are discussions about the OT event, the scope of the OT,

the type of scenarios, if required, used during the test, methodology/factors and conditions/sample size related to the test;

- **Event:** Prior to the OT event, ATEC will be involved in an Integrated T&E effort during the GAT. OTC may perform OTSs to collect data during the GAT events and enable preparations. The OTSs will collect data during the GAT phase events. The OTSs enable preparations for the OT event by providing the PM independent measurements of system progress towards meeting OT entrance criteria;

  During the OT event deployment of IPPS-A production system will be limited to selected USAR, ARNG, and Regular Army test sites, as determined by ATEC. Typical RA, ARNG, and USAR users will operate the system to perform their normal daily routine using IPPS-A, whether in tactical or homestation mode. ATEC, DOT&E and JITC representatives will participate in this operational test as data collectors and/or observers. During the OT event, it may be necessary to employ a scenario to be conducted in an operationally representative environment "Go Live." All aspects of operational effectiveness, suitability, and survivability will be examined. The Operational Test Plans will be approved by DOT&E.
- **Scope of Testing:** The OT event will be conducted over a determined period during normal operations. Emissions control and environmental factors including Electromagnetic interference (EMI) will not occur;
- **Scenarios:** If required, scripted scenarios will be used to ensure comprehensive coverage of end-to-end testing;
- **Methodology/Factors and Conditions/Sample Size:** ATEC will obtain operational data through live testing with the opportunity to perform test scenarios in an operationally representative environment "Go Live". The test team will observe IPPS-A users input personnel and pay transactions and print all pertinent reports. The test team will collect objective and subjective data using user questionnaires, data collector observations, SME observations, and automated web-based data collection questionnaires through a Web-based Data Collection tool. The sample size is determined by the Threshold and Confidence level required to determine the effectiveness and suitability of the system. Additionally, the test team will collect RAM data.

3.5.1.3 Cybersecurity OT&E

Details on operational cybersecurity testing of IPPS-A can be found in APPENDIX E .

3.5.1.4 Financial Standards Compliance Assessment (FSCA)

During Releases 4 and 5, as part of the IPPS-A Audit Readiness compliance, JITC will perform a Financial Standards Compliance Assessment (FSCA) of the IPPS-A system relative to financial reporting, revenue and accounts receivable, HR and payroll, funds control and budgetary accounting, general ledger, travel, audit trails and internal/system controls, to support a milestone decision for Releases 4 and 5. JITC will validate IPPS-A compliance with DoD Financial Improvement and Audit Readiness (FIAR) Guidance and Standard Financial Information Structure (SFIS) standards.

The FSCA will focus on six key areas:

- Chart of Accounts (COA) alignment with United States Standard General Ledger (USSGL) and DoD Standard Line of Accounting (SLOA).
- USSGL Transaction Posting Logic.
- Defense Departmental Reporting System (DDRS) Trial Balance.
- Business Enterprise Architecture (BEA) SFIS Requirements and Business Rules.
- Interface compliance of Inbound/Outbound Interfaces' with SFIS and SLOA.
- Tie Point Reconciliation.

3.5.2 Operational Evaluation Framework

The Operational Evaluation Framework (OEF) is a tool for communicating the entire OT plan and providing a basis for a decision maker to determine test adequacy. The Operational Evaluation Framework (OEF) depicted in Table 3-5 summarizes the mission focused evaluation methodology and supporting test strategy, including the essential mission and system capabilities that contribute to operational effectiveness, suitability, and survivability. The table identifies the goal of the test (within a mission context), mission-oriented response variables, factors that affect those measures, and test designs for strategically varying the factors across the operational envelope, test period, and test resources.

Table 3-5: Operational Evaluation Framework

Goal of the Test		Mission-Oriented Response Variable	Test Design		Resources	Test Period
Operation/ Capability	**Critical Operational Issues**	**Effectiveness/Suitability/ Survivability**	**Factors(Levels)**	**Operational Context and Statistical Methodology**	**People, Places, Things**	**e.g., LUT, OA, IOT&E**
SIDPERS Functionality (Release 2)	Issue 1: Capability to Subsume Legacy Systems Issue 2: Accuracy and Efficiency	• Business process success. • Data exchange success. • SRB and query success. • Data correction success. • Task completion time. • Data correction time. • System usability scale. • Operator workload score.	• Business Process (~25) • User Role (Soldier, Leader, HR Specialist) • User Type (Officer, Enlisted) • Approval Required (Yes, No) • Load on System (High, Medium, Low) • Query Size (High, Medium, Low)	Regular operations supplemented with scenarios. Report 80-percent confidence bound with target sample size to provide 80-percent power.	• Production representative system during SAT, deployed system during LUT and IOT&E. • ARNG unit.	R2 SAT R2 LUT
Accountability and Essential Personnel Services (Release 3)	Issue 1: Capability to Subsume Legacy Systems Issue 2: Accuracy and Efficiency	• Business process success. • Data exchange success. • SRB and query success. • Data correction success. • Task completion time. • Data correction time. • System usability scale. • Operator workload score.	• Business Process (~28) • Component (RA, ARNG, USAR) • User Role (Soldier, Leader, HR Specialist) • User Type (Officer, Enlisted) • Approval Required (Yes, No) • Load on System (High, Medium, Low) • Query Size (High, Medium, Low)	Regular operations supplemented with scenarios. Report 80-percent confidence bound with target sample size to provide 80-percent power.	• Production representative system during SAT, deployed system during LUT and IOT&E. • RA, ARNG, and USAR units.	R3 SAT R3 LUT
Pay Services (Release 4)	Issue 1: Capability to Subsume Legacy Systems Issue 2: Accuracy and Efficiency	• Business process success. • Data exchange success. • SRB and query success. • Data correction success. • Task completion time. • Data correction time. • System usability scale. • Operator workload score.	• Business Process (~31) • Component (RA, ARNG, USAR) • User Role (Soldier, Leader, HR Specialist) • User Type (Officer, Enlisted) • Approval Required (Yes, No) • Load on System (High, Medium, Low) • Query Size (High, Medium, Low)	Regular operations supplemented with scenarios. Report 80-percent confidence bound with target sample size to provide 80-percent power.	• Production representative system during SAT, deployed system during LUT and IOT&E. • RA, ARNG, and USAR units.	R4 SAT IOT&E
Additional Personnel Services (Release 5)	Issue 1: Capability to Subsume Legacy Systems Issue 2: Accuracy and Efficiency	• Business process success. • Data exchange success. • SRB and query success. • Data correction success. • Task completion time. • Data correction time. • System usability scale. • Operator workload score.	• Business Process (~31) • Component (RA, ARNG, USAR) • User Role (Soldier, Leader, HR Specialist) • User Type (Officer, Enlisted) • Approval Required (Yes, No) • Load on System (High, Medium, Low) • Query Size (High, Medium, Low)	Regular operations supplemented with scenarios. Report 80-percent confidence bound with target sample size to provide 80-percent power.	• Production representative system during SAT, deployed system during LUT and IOT&E. • RA, ARNG, and USAR units.	R5 SAT R5 LUT
Audit Readiness	Issue 3: Audit Readiness	• Access controls assessment. • SFIS compliance. • Data exchange success. • Transaction audit success.	• Business Process (~31) • Transaction (to be determined) • Pay Impact (Yes, No)	Review any deficiencies reported in Access Controls Assessment and Financial Standards Compliance Assessment. Demonstrate that financial information is accurately reflected in GFEBS. Confirm transactions are	• Deployed system. • RA, ARNG, and USAR units.	IOT&E

Goal of the Test		Mission-Oriented Response Variable	Test Design		Resources	Test Period
Operation/ Capability	**Critical Operational Issues**	**Effectiveness/Suitability/ Survivability**	**Factors(Levels)**	**Operational Context and Statistical Methodology**	**People, Places, Things**	**e.g., LUT, OA, IOT&E**
				auditable using system audit tables and supporting documents.		
Operational Suitability	Issue 4: Operational Suitability	• User ratings. • System usability scale. • Operator workload score. • Median number of errors. • Operational availability. • Mean time between failures. • Mean time to repair. • Helpdesk success. • Helpdesk resolution time.	• Component (RA, ARNG, USAR) • User Role (Soldier, Leader, HR Specialist) • User Type (Officer, Enlisted) • System Level (Data Center, Client)	Regular operations supplemented with scenarios. Report 80-percent confidence bound with target sample size to provide 80-percent power.	• Production representative system during SAT, deployed system during LUT and IOT&E. • RA, ARNG, and USAR units.	R2 SAT R2 LUT R3 SAT R3 LUT R4 SAT IOT&E R5 SAT R5 LUT
Cybersecurity	Issue 5: Cybersecurity	• RMF compliance and ATO. • Protection against cyber threat. • Detection of cyber threat. • Reaction to cyber threat. • Restoration after cyber attack, malfunction, or national disaster.	• Type of threat. • Attack vector.	Overt and covert cybersecurity testing. Demonstration of failover capability.	• Production representative system during SAT, deployed system during LUT and IOT&E. • Cybersecurity blue and red teams.	R2 CVPA R2 LUT R3 CVPA R3 LUT R4 CVPA IOT&E R5 CVPA R5 LUT
Cyber Economic Security	Issue 6: Cyber Economic Security	• Protection against cyber economic exploitation. • Detection of cyber economic exploitation.	• Type of threat. • Attack vector.	Cyber economic vulnerability assessment. Review of past and current financial transactions for evidence of fraudulent activity.	• Production representative system during SAT, deployed system during LUT and IOT&E. • Cybersecurity blue and red teams. • Auditor.	R4 CEVA

3.5.3 Test Methodology

Several methods will be used to evaluate effectiveness, suitability and survivability of IPPS-A. Operational Test measures and their methods of evaluation are depicted in the Data Source Matrix from Appendix B of the System Evaluation Plan. The Data Source Matrix is depicted in below Table 3-6:

Table 3-6: System Evaluation Plan Data Source Matrix

EFFECTIVENESS			
Issue 1: Capability to Subsume Legacy Systems. Does IPPS-A provide an integrated, multi-component personnel and pay system to comply with Army Total Force Policy?			
Criterion 1-1: IPPS-A shall provide a single personnel and pay system capable of subsuming the current stove-piped legacy systems.			
Measure of Effectiveness (MOE) 1-1: Capability to subsume legacy systems.			
Measure	**Data**	**Event**	**Responsible**
MOP 1-1-1: Percentage of business process transactions that are successfully completed using IPPS-A.	TPF	SAT, LUT, IOT	OTC
	TIR	SAT, LUT, IOT	OTC
	Helpdesk Tickets	SAT, LUT, IOT	PMO
	Change Requests	SAT, LUT, IOT	PMO
MOP 1-1-2: Percentage of queries that are successfully completed using IPPS-A.	Morae® Analysis	SAT, LUT, IOT	EPG
	TPF	SAT, LUT, IOT	OTC
	TIR	SAT, LUT, IOT	OTC
MOP 1-1-3: Percentage of data elements that are successfully exchanged with external systems.	Interface Test Results	DIT	EPG/PMO
	Server Logs	DIT, LUT, IOT	EPG/PMO
	Field to Field Comparison	DIT	PMO
	TPF	SAT, LUT, IOT	OTC
	TIR	SAT, LUT, IOT	OTC
Issue 2: Accuracy and Efficiency. Does IPPS-A improve the accuracy and efficiency of Army personnel and pay business processes?			
Criterion 2-1: IPPS-A shall provide Soldiers the ability to identify and correct erroneous information on their SRB.			
MOE 2-1: Capability to correct erroneous information on the SRB.			
Measure	**Data**	**Event**	**Responsible**

MOP 2-1-1: Percentage of Soldiers that successfully view their SRB.	DCF	LUT, IOT	OTC
MOP 2-1-2: Percentage of Soldiers that report finding erroneous information on their SRB.	DCF	LUT, IOT	OTC
MOP 2-1-3: Percentage of SRB errors that are corrected.	Correction Tracking	LUT, IOT	OTC
MOP 2-1-4: Time to correct an error on the SRB.	Correction Tracking	LUT, IOT	OTC
Criterion 2-2: IPPS-A shall improve the efficiency of personnel and pay business processes.			
MOE 2-2: Number of steps required to complete a task.			
Measure	**Data**	**Event**	**Responsible**
MOP 2-2-1: Number of steps required to complete a task.	Process Flow Diagrams	SAT	PMO
MOP 2-2-2: Number of systems required to complete a business process.	Process Flow Diagrams	SAT	PMO
MOP 2-2-3: Number of data fields that require duplicate data entry.	Process Flow Diagrams	SAT	PMO
MOP 2-2-4: Time to complete a task.	Times	RRE, LUT, IOT	OTC
MOP 2-2-5: Time to login to the IPPS-A portal.	System Logs	SAT, LUT, IOT	PMO
MOP 2-2-6: Time to produce a query using IPPS-A.	Morae® Analysis	SAT, LUT, IOT	EPG
MOP 2-2-7: User ratings and comments regarding the efficiency of IPPS-A business processes.	End of Test Survey	LUT, IOT	OTC
Issue 3: Audit Readiness. Does IPPS-A support audit readiness?			
Criterion 3-1: IPPS-A financial transactions shall be accurately reflected in the Army's consolidated financial statements.			
MOE 3-1: Capability to transmit SFIS compliant financial information to GFEBS.			
Measure	**Data**	**Event**	**Responsible**
MOP 3-1-1: Percentage of IPPS-A financial transactions that reflect accurately on GFEBS financial statements.	Data Transfer Logs	IOT	PMO
	IPPS-A Transaction Logs	IOT	PMO
	GFEBS Financial Statements	IOT	PMO
MOP 3-1-2: SFIS Compliance.	FSCA	IOT	PMO

Criterion 3-2: IPPS-A shall produce documentation to support an audit.			
MOE 3-2: Capability to produce supporting documentation.			
Measure	**Data**	**Event**	**Responsible**
MOP 3-2-1: Percentage of financial transactions that are written to an unalterable audit table.	TPF	IOT	OTC
	IPPS-A Transaction Logs	IOT	PMO
MOP 3-2-2: Percentage of financial transactions that are successfully traced through initiation, approval, and posting.	IPPS-A Transaction Logs	IOT	PMO
Criterion 3-3: IPPS-A shall establish and maintain permission level restrictions to protect sensitive information and prevent improper transactions.			
MOE 3-3: Capability to establish and maintain permission-level restrictions.			
Measure	**Data**	**Event**	**Responsible**
MOP 3-3-1: SME assessment of permission level restrictions.	Access Control Audit	IOT	PMO
SUITABILITY			
Issue 4: Suitability. Is IPPS-A Suitable to support the operational mission?			
Criterion 4-1: IPPS-A shall provide an easy to use, operationally Suitable system to support the Army's personnel and pay mission.			
MOE 4-1-1: Capability of the IPPS-A POI to prepare users to accomplish the Army's personnel and pay mission.			
Measure	**Data**	**Event**	**Responsible**
MOP 4-1-1-1: Number of unsuccessful business process transactions attributed to an inadequate POI.	TPF	SAT, LUT, IOT	OTC
	TIR	SAT, LUT, IOT	OTC
	Helpdesk Tickets	SAT, LUT, IOT	PMO
	Change Requests	SAT, LUT, IOT	PMO
	SPR	SAT, LUT, IOT	PMO
MOP 4-1-1-2: User ratings and comments regarding the IPPS-A POI.	Training Survey	Training for SAT, LUT, IOT	OTC
MOP 4-1-1-3: SME (i.e., personnel from the Soldier Support Institute, Army Research Laboratory Human Research and Engineering Directorate (ARL/HRED), and AEC Integrated Suitability and Methodology Evaluation Directorate) opinion of the IPPS-A POI.	SME Feedback	SAT, LUT, IOT	AEC
MOE 4-1-2: Capability of the planned force structure to support IPPS-A operations.			

Measure	Data	Event	Responsible
MOP 4-1-2-1: User ratings and comments regarding the adequacy the planned force structure.	End of Test Survey	SAT, LUT, IOT	OTC
MOP 4-1-2-2: SME opinion of the planned force structure.	SME Feedback	SAT, LUT, IOT	AEC
MOE 4-1-3: System usability metrics.			
Measure	**Data**	**Event**	**Responsible**
MOP 4-1-3-1: SUS.	End of Test Survey	SAT, LUT, IOT	OTC
MOP 4-1-3-2: Number of helpdesk tickets related to IPPS-A functionality.	Helpdesk Tickets	SAT, LUT, IOT	PMO
MOP 4-1-3-3: Operator workload score.	End of Test Survey	SAT, LUT, IOT	OTC
MOP 4-1-3-4: Number of tasks required to complete a business process.	Morae® Analysis	SAT	EPG
MOP 4-1-3-5: Number of steps required to complete a task.	Morae® Analysis	SAT	EPG
MOP 4-1-3-6: Number of errors encountered when completing a task.	Morae® Analysis	SAT	EPG
MOE 4-1-4: Adequacy of IPPS-A system management.			
Measure	**Data**	**Event**	**Responsible**
MOP 4-1-4-1: SME opinion of IPPS-A system management procedures.	System Management Procedures	SAT, LUT, IOT	PMO
Criterion 4-2: IPPS-A shall be operationally available to support the operational mission.			
MOE 4-2-1: Availability of the IPPS-A data centers to support the operational mission.			
Measure	**Data**	**Event**	**Responsible**
MOP 4-2-1-1: MTBSA.	TPF	SAT, LUT, IOT	OTC
	TIR	SAT, LUT, IOT	OTC
	Helpdesk Tickets	SAT, LUT, IOT	PMO
	Change Requests	SAT, LUT, IOT	PMO
	SPR	SAT, LUT, IOT	PMO
	Server Logs	SAT, LUT, IOT	PMO
	Maintenance Logs	SAT, LUT, IOT	PMO

	Corrective Action Reports	SAT, LUT, IOT	PMO
MOP 4-2-1-2: MTBUMA.	Maintenance Logs	SAT, LUT, IOT	PMO
MOP 4-2-1-3: MTTR.	Maintenance Logs	SAT, LUT, IOT	PMO
MOP 4-2-1-4: Ao at the data center.	Server Logs	SAT, LUT, IOT	PMO
	Maintenance Logs	SAT, LUT, IOT	PMO
MOE 4-2-2: Availability of IPPS-A client to support the operational mission.			
Measure	**Data**	**Event**	**Responsible**
MOP 4-2-2-1: Ao at the client.	TIR	SAT, LUT, IOT	OTC
	Helpdesk Tickets	SAT, LUT, IOT	PMO
	Server Logs	SAT, LUT, IOT	PMO
	Maintenance Logs	SAT, LUT, IOT	PMO
	Audit Logs	SAT, LUT, IOT	PMO
MOP 4-2-2-2: MTBEFF.	TIR	SAT, LUT, IOT	OTC
	Helpdesk Tickets	SAT, LUT, IOT	PMO
MOP 4-2-2-3: MTSWR.	TIR	SAT, LUT, IOT	OTC
	Helpdesk Tickets	SAT, LUT, IOT	PMO
	Maintenance Logs	SAT, LUT, IOT	PMO
Criterion 4-3: IPPS-A shall support the transition from legacy personnel and pay systems.			
MOE 4-3-1: Compatibility of IPPS-A with legacy systems and processes.			
Measure	**Data**	**Event**	**Responsible**
MOP 4-3-1-1: Number of unsuccessful business process transactions attributed to compatibility with legacy systems and processes.	TPF	SAT, LUT, IOT	OTC
	TIR	SAT, LUT, IOT	OTC
	Helpdesk Tickets	SAT, LUT, IOT	PMO
	Change Requests	SAT, LUT, IOT	PMO
	SPR	SAT, LUT, IOT	PMO
MOE 4-3-2: Adequacy of IPPS-A change management.			
Measure	**Data**	**Event**	**Responsible**

MOP 4-3-2-1: User ratings and comments regarding their awareness, understanding, acceptance, and ownership of IPPS-A.	End of Test Survey	SAT, LUT, IOT	OTC
MOP 4-3-2-2: SME (i.e., personnel from ARL/HRED, and AEC Integrated Suitability and Methodology Evaluation Directorate) opinion of IPPS-A change management.	SME Feedback	SAT, LUT, IOT	AEC
MOE 4-3-3: Adequacy of the IPPS-A helpdesk.			
Measure	**Data**	**Event**	**Responsible**
MOP 4-3-3-1: Percentage of helpdesk tickets resolved successfully.	Helpdesk Tickets	SAT, LUT, IOT	PMO
MOP 4-3-3-2: Mean helpdesk ticket resolution time.	Helpdesk Tickets	SAT, LUT, IOT	PMO
MOP 4-3-3-3: User ratings and comments regarding the adequacy the IPPS-A helpdesk.	End of Test Survey	SAT, LUT, IOT	OTC
SURVIVABILITY			
Issue 5: Cybersecurity. Does IPPS-A provide adequate data and resource protection in its intended operational environment and is the system secure and survivable?			
Criterion 5-1: IPPS-A shall meet DoD RMF requirements and obtain an ATO.			
Measure	**Data**	**Event**	**Responsible**
MOE 5-1: RMF compliance.	CVPA Report	CVPA	ARL/SLAD
	ATO	CVPA	PMO
Criterion 5-2: IPPS-A shall provide adequate Cybersecurity PROTECTION to support the operational mission, data, and users.			
Measure	**Data**	**Event**	**Responsible**
MOE 5-2: Capability to protect against cyber threat activity.	CVPA Report	CVPA	ARL/SLAD
	TSMO Report	AA	TSMO
	PDRR Report	AA	ARL/SLAD
Criterion 5-3: IPPS-A shall provide adequate Cybersecurity DETECTION to support the operational mission, data, and users.			
Measure	**Data**	**Event**	**Responsible**
MOE 5-3: Capability to detect cyber threat activity.	CVPA Report	CVPA	ARL/SLAD
	TSMO Report	AA	TSMO
	PDRR Report	AA	ARL/SLAD
Criterion 5-4: IPPS-A shall provide adequate Cybersecurity REACTION to support the operational mission, data, and users.			

Measure	Data	Event	Responsible
MOE 5-4: Capability to react to detected cyber threat activity.	TSMO Report	AA	TSMO
	PDRR Report	AA	ARL/SLAD
Criterion 5-5: IPPS-A shall provide adequate Cybersecurity RESTORATION to support the operational mission, data, and users.			
Measure	**Data**	**Event**	**Responsible**
MOE 5-5: Capability to restore the operational capability following an attack, malfunction, or natural disaster.	COOP Report	Failover and Restoration Event	ARL/SLAD
Issue 6: Cyber Economic Security. Does IPPS-A mitigate the risk of economic exploitation?			
Criterion 6-1: IPPS-A shall provide PROTECTION against economic exploitation.			
Measure	**Data**	**Event**	**Responsible**
MOE 6-1: Capability to protect against cyber economic exploitation.	CEVA CVPA Report	CEVA CVPA	ARL/SLAD
	CEVA AA Report	CEVA AA	TSMO
	CEVA Report	CEVA	Auditor
Criterion 6-2: IPPS-A shall provide DETECTION of economic exploitation.			
Measure	**Data**	**Event**	**Responsible**
MOE 6-2: Capability to detect cyber economic exploitation.	CEVA CVPA Report	CEVA CVPA	ARL/SLAD
	CEVA AA Report	CEVA AA	TSMO
	CEVA Report	CEVA	Auditor

3.5.4 Modeling & Simulation

Currently, no modeling and simulation is planned to be utilized.

3.5.5 Test Limitations

For all Releases, the limited time period allotted for the T&E phases in the production-representative environment creates a risk for the IPPS-A system to demonstrate the Business Case reliability threshold requirement with high confidence. This limitation is based upon 24 hours per day of data center operations for an anticipated 60 day LUT and/or IOT event for each Release. The ATEC RAM evaluator and AST chair have reached an agreement with the PMO and FMD Customer to include automated testing time and associated SPRs collected during the SAT test phase in the OT evaluation to help lessen the impact of this limitation. AEC will collect

additional hours by continuing the collection of data on the servers for a timeframe immediately following the LUT/IOT test event. More details can be found in Appendix F.

As Release details become available, any identified Release specific limitations will be added to the appropriate Annex to the document.

3.6 Live Fire Test and Evaluation Approach

IPPS-A Increment II does not require live fire testing.

3.7 Other Certifications

No other certifications are planned for IPPS-A Increment II.

3.8 Future Test and Evaluation

After the completion of Increment II, with the deployment of Release 5, future test and evaluation is planned to be limited to regression testing for patches, upgrades and minor releases. At this time, there are no definite plans for follow on major releases.

4 PART IV - RESOURCE SUMMARY

4.1 Introduction

In this section, both government and contractor resources are discussed that are necessary to plan, execute, and evaluate Increment II testing. Resource elements include test articles, models, simulations, test facilities, manpower for test conduct and support, and other items that are described below.

4.2 Test Resource Summary

4.2.1 Test Articles

This section identifies the IPPS-A Increment II test environments that will be utilized for each test event. Figure 4-1 and Figure 4-2 provide details on the test environment makeup and their usage.

Figure 4-1: IPPS-A Test Environment Applications

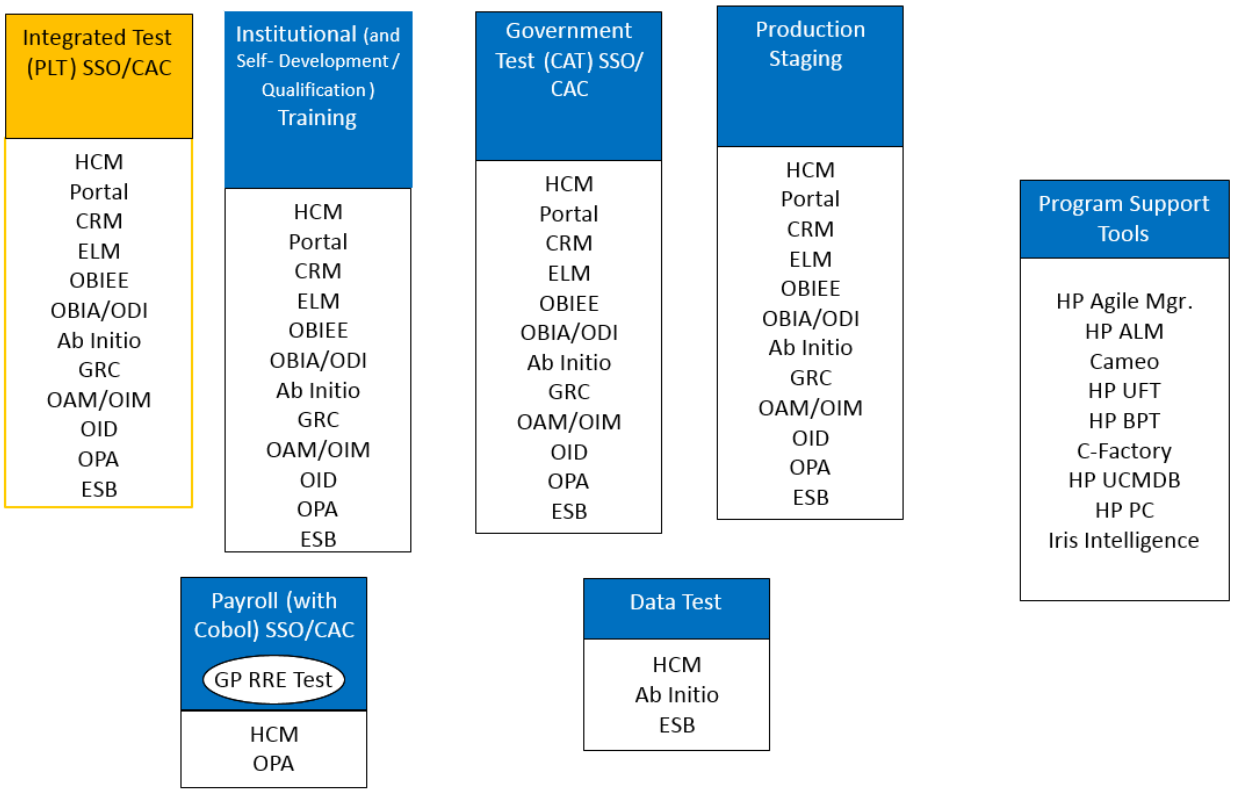

Figure 4-2: IPPS-A Test Environment Usage

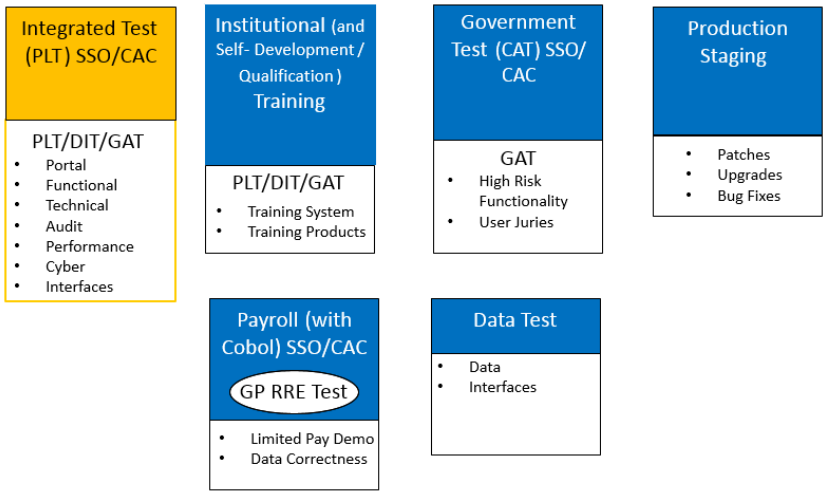

4.2.1.1 Increment II Production Environment

All Releases for Increment II will be deployed and maintained on the Increment II production environment. The production environment for Releases 2 through 5 will be composed of the PDC and portions of the SDC. For Release 2 only, DIT and GAT will be conducted on the production environment prior to OT.

4.2.1.2 IPPS-A Increment II Test Environments

The majority of the production-representative Inc II test environments will simulate the production environment by having the same capabilities and required interfaces, but with less capacity. Notable exceptions include the Integrated Test Environment, Cyber Test Environment, Production Support Environment and the Training Test Environment which should be equal to the production environment in HW size/performance and software application stack. For Releases 3 through 5, DIT and GAT will be conducted on the Integrated Test Environments prior to OT.

The government provided test environments will be under CM control and under the operational control of the test event owner with government test environment management and T&E staff oversight. For Increment II, the test environments will be used to conduct all testing activities and for informal testing of IPPS-A Increment II to include the testing of system fixes by the SI. Test environments will reside both on the NIPRNet and the Secret Internet Protocol Router Network (SIPRNet).

4.2.1.3 Interfacing Systems Test Environments

A test bed may be required for interfacing agencies during developmental interoperability testing. Test bed requirements for specific systems will be provided in the Detailed Test Plans for each release.

4.2.2 Test Sites

Table 4-1 identifies the test sites from which testing will be conducted for each IPPS-A Increment II test event.

Table 4-1: Test Sites

Test Events	Arlington, VA	Cyber Range Environment	DISA DECC St. Louis, MO	DISA DECC Ogden, UT	Various Multi Echelon CONUS End User Sites
PLT	**X**	**X**	X (CVI)	X (CVI)	
CAT	**X**				**X**
DIT	**X**		**X** (AA DT)	**X** (AA DT)	
SIT	**X**		**X** (CVPA)	**X** (CVPA)	
SQT	**X**				
SAT					**X**
LUT/IOT			**X** (AA)	**X** (AA)	**X**

4.2.3 Test Instrumentation

For Developmental Testing, the IPPS-A Increment II T&E strategy includes the use of the web-enabled Hewlett Packard (HP) Application Lifecycle Management (ALM) to collect and store test results in a central repository that is accessible by staff members from all test organizations. The central repository will become a unified set of data and artifacts collected across all test events that will allow the data to be shared by all stakeholders in support of independent analysis, evaluation, and reporting. All data and artifacts entered into the repository will be validated by the appropriate personnel and labeled as validated in the tool. The data and artifacts pedigree, including the actual test conditions (system configurations) associated with each test script/scenario, will be maintained within the tool. Additionally, the PMO will post test data and artifacts to the program Stakeholder's SharePoint site and make the information available to T&E WIPT members.

Additional analysis tools to be used during DT include:

- Advanced Combinatorial Testing System (ACTS): ACTS generates test sets that ensure t-way coverage of input parameter values.
- JMP: JMP is a statistical discovery tool that links dynamic data visualization with statistics for Reliability testing.

4.2.4 Test Support Equipment

The testing locations (Arlington, VA) and End-User-Sites will require the following in order to support the test events:

- Desktop/Laptop Computers;
- Remote access to HP ALM;
- Connectivity to the World-Wide Web (WWW);
- Encryption capability for handling PII data;
- Microsoft Office Suite;
- Conference room with the capability to support conference calls/ Defense Collaboration Services links/Video Teleconferencing (VTC)
- Network Printer
- Connectivity as required into the Cyber Range Closed Loop environment

It is the T&E Branch's intent to maximize the use of automated testing, for both regression testing, performance and risk reduction. Additional test support software required by the PMO and SI to facilitate test script execution include:

- cFactory: Tool for generating automated test scripts; integrates with the HP suite of tools.
- HP Unified Functional Tester: Tool for automated functional test script execution; integrates with cFactory.
- HP Business Process Tester: Tool for end-to-end business process automated test script development; integrates with cFactory.

- HP Performance Center: Tool used to conduct automated performance and load testing of the system.
- SnagIT: Video screen capture tool for defect logging.
- SoapUI: Tool used for web services testing.

4.2.5 Threat Representation

The Threat Team will portray the CNO threat to IPPS-A Increment II for each Release. That portrayal will include the CNO threat represented by novice, intermediate and expert hackers. The threat portrayal may identify security vulnerabilities, including those which could result in unauthorized release of IPPS-A Increment II Privacy Act data. Resources have been included for the vulnerability and adversarial testing as specified in APPENDIX E .

4.2.6 Test Targets and Expendables

There are no test targets and expendables associated with the IPPS-A test events.

4.2.7 Operational Force Test Support

IPPS-A Increment II will require Operational Force Test Support for all test events either in an observer role or as a test participant. FMD and the Test, Schedule, and Review Committee (TSARC) will identify the SMEs and the role in which they will be utilized. The test events along with required proponent SMEs are listed in Table 4-2.

Table 4-2: Operational Force Test Support

T&E Activities	Proponent SMEs	SME Role	Agency to Identify
PLT	Regular Army, USAR, ARNG, Defense Manpower Data Center (DMDC), DFAS	Observation	FMD
CAT	Regular Army, USAR, ARNG, DMDC, DFAS	Observation	FMD
User Jury	Army, USAR, ARNG	Test Participant	FMD
DIT	Regular Army, USAR, ARNG, Interface System Owners	Observation	FMD
SIT	Regular Army, USAR, ARNG, Interface System Owners	Observation	FMD
SQT	Regular Army, USAR, ARNG, DMDC, DFAS	Test Participant	FMD
JITC	Joint Interface System Owners	Test Participant	IPPS-A PMO

T&E Activities	Proponent SMEs	SME Role	Agency to Identify
SAT	Regular Army, USAR, ARNG, Interface System Owners	Test Participant	FMD and TSARC
LUT/IOT	Regular Army, USAR, ARNG, Interface System Owners, Enterprise Computer Network Defense (CND) Providers	Test Participant	TSARC and IPPS-A PMO

4.2.8 Models, Simulations, and Test beds

Detailed information on modeling and simulation requirements is found in section 3.2.3.

4.2.9 Joint Operational Test Environment

See Appendix E for details on virtual and distributed testing.

4.3 Federal, State, and Local Requirements

During IPPS-A Increment II testing at Arlington, VA, and Continental United States (CONUS) sites, all Federal, State and Local requirements will be followed as applicable.

4.4 Manpower/Personnel and Training

The IPPS-A Increment II training strategy provides the framework for adhering to an Instructional Systems Design (ISD) methodology and the Automated System Approach to Training (ASAT) format which supports Army doctrine, training development, support, and management functions, and are issued and maintained by the TRADOC G2. Training for HR processes conducted within an IPPS-A environment will be delivered through Distributed Learning (dL). Detailed information can be found in the program System Training Plan (STRAP).

Manpower considerations will be fully addressed in the detailed test plan for each test event. The information will include, but not be limited to, roles and permissions, user types (specifically Military Occupational Specialty (MOS) 42 (Personnel), and the different types of organizations responsible for processing IPPS-A data.

4.5 Test Funding

Table 4-3 below is an extract of the PB19 TE Report and identifies the projected T&E funding requirements throughout the program lifecycle.

Table 4-3: Inc II T&E Funding Requirements

TEType	FundSource	Funding Type	Prior Total (FY15 & before)	FY2016	FY2017	FY2018	FY2019	FY2020	FY2021	FY2022	FY2023	To Complete
DT&E (INC II)	Govt	RDTE	981	1,761	1,969	9,357	2,067	800				
OT&E (INC II)	Govt	RDTE		576	2,361	8,416	7,000	5,000				

Test event-specific funding requirements for Releases 2 through 5 will be depicted in Annexes 1 through 4 respectively.

APPENDIX A BIBLIOGRAPHY

AR 602-2 Human Systems Integration, 27 Jan 2015

AR 702-19 Reliability, Availability, and Maintainability, 28 April 2015

Chairman of the Joint Chiefs of Staff Instruction (CJCSI) 6212.01F, 21 March 2012AR 73-1, Test and Evaluation Policy, 1 August 2006

DA Pamphlet 73-1, Test and Evaluation in Support of systems Acquisition, 20 May 2003

Department of Defense Cybersecurity Test and Evaluation Guidebook, v1.0, 1 July 2015

Deputy Assistant Secretary of Defense (Developmental Test and Evaluation) (DASD(DT&E)) Guidelines for Cybersecurity DT&E, v1.0, 19 April 2013

Director, Operational Test and Evaluation (DOT&E) Memorandum, Subject: Cyber Economic Vulnerability Assessments, 21 January 2015

Director, Operational Test and Evaluation (DOT&E) Memorandum, Subject: Procedures for Operational Test and Evaluation of Cybersecurity in Acquisition Programs, 1 August 2014

DODI 5000.02, Operation of the Defense Acquisition System, 7 January 2015

DODI 8500.01 Cybersecurity, 14 March 2014

DODI 8510.01 Risk Management Framework (RMF) for DoD Information Technology (IT), 12 March 2014

IPPS-A Disaster Recovery (DR) and Information Technology Contingency Plan (ITCP) v1.0 Draft, 6 September 2016

IPPS-A Program Protection Plan (PPP) v2.0 Draft, October 2016

IPPS-A Financial and Operational Audit Readiness (FOAR) Plan v1.0, 31 March 2016

IPPS-A Functional Baseline

IPPS-A Application Security Design 1.0, 18 July 2016

IPPS-A Cybersecurity Strategy Increment II Release 2.0 v2.0, 28 April 2016

IPPS-A Technical Architecture Specification v1.0, 6 September 2016

IPPS-A Increment II Business Case v1.0, December 2014

IPPS-A T&E Working-Level Integrated Product Team Charter v2, 11 March 2016

IPPS-A Test Review Board Charter v1.0, 30 November 2015

IPPS-A Test Management Plan v4.0, 8 June 2016

IPPS-A Life-Cycle Sustainment Plan Increment II v1.0, 10 May 2012

IPPS-A System Engineering Plan Increment II v2.0 Draft, December 2016

IPPS-A Data Center Migration Plan, v1.1, 30 August 2016

IPPS-A Data Archiving Plan, v1.0, 6 September 2016

IPPS-A Service Oriented Architecture (SOA)/Enterprise Service Bus (ESB) Integration Plan v1.1, 26 October 2016

IPPS-A New Equipment Training (NET) Plan v1.1 Draft, 25 July 2016

IPPS-A System Threat Assessment Report, 23 May 2016

IPPS-A Technical Architecture Drawings, v1.1, 15 November 2016

IPPS-A Cyber Security Vulnerability and Patch Management Plan v1.0, 5 May 2014

IPPS-A Increment II System Evaluation Plan, April 2017

IPPS-A Systems Evolution Description (SV-08), v1.16, 13 June 2017

APPENDIX B ACRONYMS AND ABBREVIATIONS

Acronym	Definition
Ao	Operational Availability
AAA	Army Audit Agency
AAFES-JSCS	Army Air Force Exchange Services – Joint Services Collection System
ACAT	Acquisition Category
ACTS	Automated Combinatorial Testing for Software
ADT	Adversarial DT
AEC	Army Evaluation Center
AERS	Army Emergency Relief System
AFCOS	Automated Fund Control System
AIC	Army Interoperability Certification
AKO	Army Knowledge Online
ALM	Application Lifecycle Management
AMSAA	Army Material Systems Analysis Activity
AO	Authorizing Official
AR	Army Regulation
ARISS	Army Recruiting Information Support System
ARL	Army Research Laboratory
ARNG	Army National Guard
ASA FM&C	Assistant Secretary of the Army for Financial Management and Comptroller
ASAT	Automated System Approach to Training
ATEC	Army Test and Evaluation Command
ATO	Authorization to Operate

Acronym	Definition
ATRRS	Army Training Requirements and Resources System
BC	Business Case
BEA	Business Enterprise Architecture
BO	Business Outcome
BPR	Business Process Reengineering
BTA	Business Transformation Agency
CAC	Common Access Card
CAT	Capability Acceptance Test
CCB	Configuration Control Board
CDD	Capability Development Document
CDI	Critical Developmental Issues
CDR	Critical Design Review
CE	Continuous Evaluation
CEVA	Cyber Economic Vulnerability Assessment
CI	Configuration Item
CIO	Chief Information Officer
CM	Configuration Management
CNA	Computer Network Attack
CNE	Computer Network Exploitation
CNO	Computer Network Operations
COA	Chart of Accounts
COCOM	Combatant Command

Acronym	Definition
COI	Critical Operational Issue
CONOPS	Concept of Operations
CONUS	Continental United States
COTS	Commercial off-the-shelf
CPU	Central Processing Unit
CR	Change Request
CSSP	Cybersecurity Service Provider
CTP	Critical Technical Parameters
CTT	Cyber Table Top
CVI	Cooperative Vulnerability Identification
CVPA	Cooperative Vulnerability and Penetration Assessment
DA	Department of the Army
DA PAM	Department of Army Pamphlet
DAB	Defense Acquisition Board
DAG	Data Analysis Group
DASD(DT&E)	Deputy Assistant Secretary of Defense for Developmental Test and Evaluation
DCMO	Deputy Chief Management Officer
DCS	Deputy Chief of Staff
DDI	Design, Develop, and Integration
DDMS	Defense Debt Management System
DEF	Developmental Evaluation Framework
DFAS	Defense Finance & Accounting Service

Acronym	Definition
DIMHRS	Defense Integrated Military Human Resources System
DIT	Developer Integration Test
DJMS	Defense Joint Military Pay System
DJMS-AC	Defense Joint Military Pay System-Active Component
DJMS-RC	Defense Joint Military Pay System-Reserve Component
dL	Distributed Learning
DLI	Defense Language Institute
DMDC	Defense Manpower Data Center
DoD	Department of Defense
DoDI	Department of Defense Instruction
DOE	Design of Experiment
DOT&E	Director, Operational Test and Evaluation
DOTMLPF-P	Doctrine, Organization, Training, Materiel, Leadership, Personnel, and Facilities-Policy
DR	Disaster Recovery
DRAS	Defense Retiree & Annuitant Pay System
DSK	Decision Support Key
DSQ	Decision Support Questions
DT	Developmental Test
DT&E	Developmental Test and Evaluation
DTS	Defense Travel System
DUSA-TE	Deputy Under Secretary of the Army – Test and Evaluation
EDAS	Enlisted Distribution and Assignment System

Acronym	Definition
EIW	Enterprise Information Web
EMD	Engineering, Manufacturing and Development
EMI	Electromagnetic Interference
eMILPO	electronic Military Personnel Office
EPG	Electronic Proving Grounds
EPM	Enlisted Promotion Model
ERP	Enterprise Resource Planning
ESB	Enterprise Service Bus
ESS	Effectiveness, Suitability and Survivability
ETL	Extract, Transform, and Load
ETR	End of Test Review
EW	Electronic Warfare
FB	Functional Baseline
FDD	Full Deployment Decision
FD/SC	Failure Definition / Scoring Criterion
FEF	Fix Effectiveness Factor
FFMIA	Federal Financial Management Improvement Act
FIAR	Financial Improvement and Audit Readiness
FMD	Functional Management Division
FOC	Full Operational Capability
FSCA	Financial Standards Compliance Assessment
FY	Fiscal Year

Acronym	Definition
GAT	Government Acceptance Test
GFEBS	General Funds Enterprise Business System
GFI	Government Furnished Information
GSME	Government Subject Matter Expert
HFE	Human Factors Engineering
HLO	High-Level Outcomes
HP	Hewlett Packard
HQDA	Headquarters, Department of the Army
HR	Human Resources
HRC	Human Resources Command
HRED	Human Research and Engineering Directorate
HSI	Human Systems Integration
HSI-UX	Human System Integration-User Experience
IA	Information Assurance
IAM	Information Assurance Manager
IATT	Interim Authority to Test
IAVA	Information Assurance Vulnerability Alert
IAW	In Accordance With
IDD	Interface Design Document
IEEE	Institute of Electrical and Electronics Engineering
IGS	Integrated Garnishment System
IM	Information Management

Acronym	Definition
IO	Information Operations
IOP	Interoperability
IOT	Initial Operational Test
IOT&E	Initial Operational Test and Evaluation
IPPS-A	Integrated Personnel and Pay System-Army
IPR	In-Progress Review
IPT	Integrated Product Team
ISD	Instructional System Design
ISO	International Organization for Standardization
ISP	Information Support Plan
IT	Information Technology
ITCP	Information Technology Contingency Plan
ITT	Integrated Test Team
JIO	Joint Interoperability
JITC	Joint Interoperability Test Command
KPP	Key Performance Parameter
LCSB	Life-Cycle Support Branch
LFD	Limited Fielding Decision
LMD	Life-Cycle Management Division
LUT	Limited User Test
M&S	Modeling and Simulation
MAIS	Major Automated Information System

Acronym	Definition
MDA	Milestone Decision Authority
MNS	Mission Needs Statement
MOA	Memorandum of Agreement
MOE	Measure of Effectiveness
MOP	Measure of Performance
MOS	Military Occupational Specialty
MS	Milestone
MS C	Milestone C
MTBEFF	Mean Time Between Essential Functional Failure
MTBF	Mean Time Between Failure
MTBSA	Mean Time Between System Abort
MTSWR	Mean Time to Software Restore
MTTR	Mean Time To Repair
NIPRNet	Non-Secure Internet Protocol Router Network
NIST	National Institute for Standards and Technology
NR	Net Ready
OAR	Operational Assessment Report
OER	Operational Evaluation Report
OMAR	OTA Milestone Assessment Report
OPFOR	Opposition Force
OSD	Office of the Secretary of Defense
OT	Operational Test

Acronym	Definition
OTA	Operational Test Agency
OTC	Operational Test Command
OTS	Operational Test Segment
OT&E	Operational Test and Evaluation
OTRR	Operational Test Readiness Review
OV	Operational View
PD	Production and Deployment
PDR	Preliminary Design Review
PDRR	Protect, Detect, React, and Restore
PEO EIS	Program Executive Office Enterprise Information Systems
PERSTEMPO	Personnel Tempo
PII	Personally Identifiable Information
PIN	Personal Identification Number
PLT	Product Level Test
PM	Project Manager
PMO	Project Management Office
PO	Program Outcome
POC	Point of Contact
RA	Regular Army
RAM	Reliability, Availability, and Maintainability
RCAS	Reserve Component Automation System
RCCPDS	Reserve Component Common Personnel Data System

Acronym	Definition
RCMS	Reserve Component Management System
RLAS	Regional Level Application Software
RMF	Risk Management Framework
ROE	Rules of Engagement
ROTC	Reserve Officer Training Corps
RRE	Risk Reduction Event
RSC	Reliability, Availability, and Maintainability Scoring Conference
RTM	Requirements Traceability Matrix
RTVM	Requirements Traceability Verification Matrix
SA	System Abort
SAAR	System Authorization Access Request
SAT	System Acceptance Test
SBT	Specification Based Testing
SD	System Developer
SDLC	Systems Development Life Cycle
SDT	System Developer Testing
SEP	Systems Engineering Plan
SEPS	Single Evaluation Processing System
SFIS	Standard Financial Information Structure
SI	System Integrator
SIA	System Interface Agreement
SIDPERS	Standard Installation/Division Personnel System

Acronym	Definition
SIDPERS-G	Standard Installation/Division Personnel System-Guard
SIPRNet	Secret Internet Protocol Router Network
SIT	System Integration Test
SLA	Service Level Agreement
SLAD	Survivability/Lethality Analysis Directorate
SLOA	Standard Line of Accounting
SME	Subject Matter Expert
SOA	Service Oriented Architecture
SORS	Salary Offset Reporting System
SPR	System Problem Report
SQT	System Qualification Test
SRB	Soldier Record Brief
SSAA	System Security Authorization Agreement
SSN	Social Security Number
STAR	System Threat Assessment Report
STRAP	System Training Plan
SUT	System Under Test
T&E	Test and Evaluation
TAPDB-AE	Total Army Personnel Database Enlisted
TAPDB-AO	Total Army Personnel Database Active Officer
TAPDB-R	Total Army Personnel Database – Reserve
TCOT	Threat Computer Network Operations Team

Acronym	Definition
TDP	Tri-care Dental Program
TEMP	Test and Evaluation Master Plan
TIR	Test Incident Report
TMD	Technical Management Division
TOPMIS	Total Officer Personnel Management Information System
TPF	Task Performance Form
TRADOC	Training and Doctrine Command
TRANSPROC	Transition Processing
TRB	Test Review Board
TRR	Test Readiness Review
TSARC	Test, Schedule, and Review Committee
TSMO	Threat Systems Management Office
TSP	Thrift Savings Plan
TTSP	Threat Test Support Package
UIC	Unit Identification Code
ULT	Unit Level Test
USAFMCOM	United States Army Financial Management Command
USAR	United States Army Reserve
USD(AT&L)	Under Secretary of Defense for Acquisition, Technology & Logistics
USMA	United States Military Academy
USSDP	Uniformed Service Savings Deposit Program
USSGL	United States Standard General Ledger

Acronym	Definition
VoF	Verification of Fixes
VTC	Video Teleconferencing
WIPT	Working Integrated Product Team
WWW	World-Wide Web
XML	Extensible Markup Language

APPENDIX C POINTS OF CONTACT

Name	Organization	Phone	Email
Jeffrey Thomas	G-1 DAPE-HSI	703-695-5853	jeffrey.a.thomas132.civ@mail.mil
Eric Tenorio	ARL-SLAD	575-678-0473	eric.tenorio.civ@mail.mil
Jan Getting	Army G-2	703-695-2045	jan.getting.civ@mail.mil
Kevin Hogan	ATEC-AEC (AST Chair)	443-861-9432	kevin.m.hogan13.civ@mail.mil
Francis Manyen	ATEC-OTC	254-286-6419	francis.j.manyen.civ@mail.mil
Chung Au	CACI	703-545-2755	chung.d.au.ctr@mail.mil
Chris Deluca	DASD(DT&E)	571-372-4171	ralph.c.deluca.civ@mail.mil
Mark Piper	DASD(DT&E)	571-372-6070	mark.m.piper.ctr@mail.mil
Robert Scarbrough	DFAS	571-239-4434	robert.r.scarbrough.civ@mail.mil
Sharon Zehring	DFAS	317-212-5476	sharon.k.zehring.civ@mail.mil
Teresa Bachur	DFAS (T&E)	317-212-3756	teresa.l.bachur.civ@mail.mil
Mark Tisi	DFAS (T&E)	317-212-4972	mark.w.tisi.civ@mail.mil
Paul Harms	DMDC	571-372-0997	paul.r.harms.civ@mail.mil
Gary Wilhelm	DOT&E	571-372-3835	gary.l.wilhelm.civ@mail.mil
Conor Schlick	IDA	703-845-2477	cschlick@ida.org
COL Patrick Walden	DUSA-TE	703-545-1080	patrick.l.walden.mil@mail.mil
Donn Puckle	EPG	520-538-4830	donn.h.puckle.civ@mail.mil
COL Gregory Johnson	G-1 FMD	703-545-2706	gregory.s.johnson80.mil@mail.mil
CW3 Shawn Whittaker	G-1 FMD	703-545-2892	shawn.p.whittaker.mil@mail.mil
Robert Sprout	HQDA CIO G-6	703-545-1475	robert.h.sprout.civ@mail.mil
Donna Boyce	HQDA DCS G-2	703-695-2047	donna.m.boyce2.civ@mail.mil
Joshua J Bailey	JITC	520-538-4625	joshua.j.bailey2.civ@mail.mil
James Karl	JITC (SFIS)	520-538-1742	james.f.karl.civ@mail.mil
Steve Daiber	JMN	757-492-6998	stephen.r.daiber.civ@mail.mil
Michael Comer	NGB ARNG	317-212-3983	michael.s.comer2.civ@mail.mil
Robert Riddick	PEO-EIS	703-806-4125	robert.l.riddick.civ@mail.mil
COL James (Darby) McNulty	PMO	703-545-2687	james.f.mcnulty.mil@mail.mil
LTC Nicole Reinhardt	PMO	703-704-1146	nicole.u.reinhardt.mil@mail.mil
Sean Staton	PMO	703-545-3283	sean.c.staton2.civ@mail.mil
Ruben Fonseca	PMO	703-545-2847	ruben.fonsecatorres@mail.mil
Patricia Ocasio	PMO	703-545-2959	patricia.l.ocasio.civ@mail.mil
Hector Acosta	PMO	703-545-2912	hector.j.acostarobles.civ@mail.mil
Stone Quillian	PMO	703-545-2922	stone.w.quillian2.civ@mail.mil
Chrys Chrysanthou	PMO	703-545-2694	chrysanthos.chrysanthou.civ@mail.mil
Laurie Atkins	TRADOC G-2	757-501-6193	lauri.j.atkins.civ@mail.mil
Peter Colsch	TSMO	256-876-8686	peter.j.colsch.civ@mail.mil
Hans Kennedy	USAFMCOM	317-212-1305	hans.kennedy@dfas.mil

APPENDIX D SCIENTIFIC TEST AND ANALYSIS TECHNIQUES

Data Validation

The IPPS-A T&E Branch is responsible for ensuring that the data received from legacy systems is accurately loaded into the IPPS-A database. Data accuracy is defined as "The data contained in the IPPS-A database has been accurately received from an external system, is accurately mapped to the appropriate field within IPPS-A, and the data values are consistent with the data values received from the external source system." The data validation process verifies the accuracy of the converted data from the Extraction, Transformation and Load (ETL) process into the IPPS-A system. This will be accomplished by using the approved Interface Design Documents (IDD) to create a series of automated validation scripts. During execution of the automated test scripts the application will compare the source data to the data loaded into the IPPS-A database and apply the transformation logic contained within the IDD to determine if the data was accurately loaded. See Figure D-1 which represents an illustration of the data validation process.

The IPPS-A T&E Branch will use the below validation phases to determine the accuracy of the converted data and persistent interfaces:

- Review IDD documents, B1 document specifically to determine the IPPS-A (PeopleSoft) tables to be validated and the legacy tables that will contain the data to be converted into IPPS-A. The B2 document, if it exists, to determine the crosswalk values from legacy to IPPS-A.
- Build scripts in an application to read the legacy tables and specific fields identified in the IDD documents and create a baseline table per script to validate that the legacy data was accurately converted into IPPS-A. Part of these baseline tables will be the converted IPPS-A rows to be compared against the legacy baseline.
- Develop a suite of robust automated test scripts that when executed will rapidly validate the data conversion for accuracy. These scripts will be executed against a targeted subset of soldiers determined by count or characteristics required. Once the data validates successful at a subset, increase the subsets until the full load validates at or above program established thresholds.
- Create documents to report results per IDD to the program that can also be used to initiate root cause analysis.
- Perform root cause analysis and report results to appropriate parties to enhance the conversion and data validation to produce more accurate results.

The results of the data validation scripts are analyzed to produce metrics to represent whether the ETL load was successful in meeting established thresholds. Two scorecards are produced to display the results of the data validation execution. The first is a foundation data report and the second more comprehensive is a consolidated report.

Figure D-1: Data Validation Process

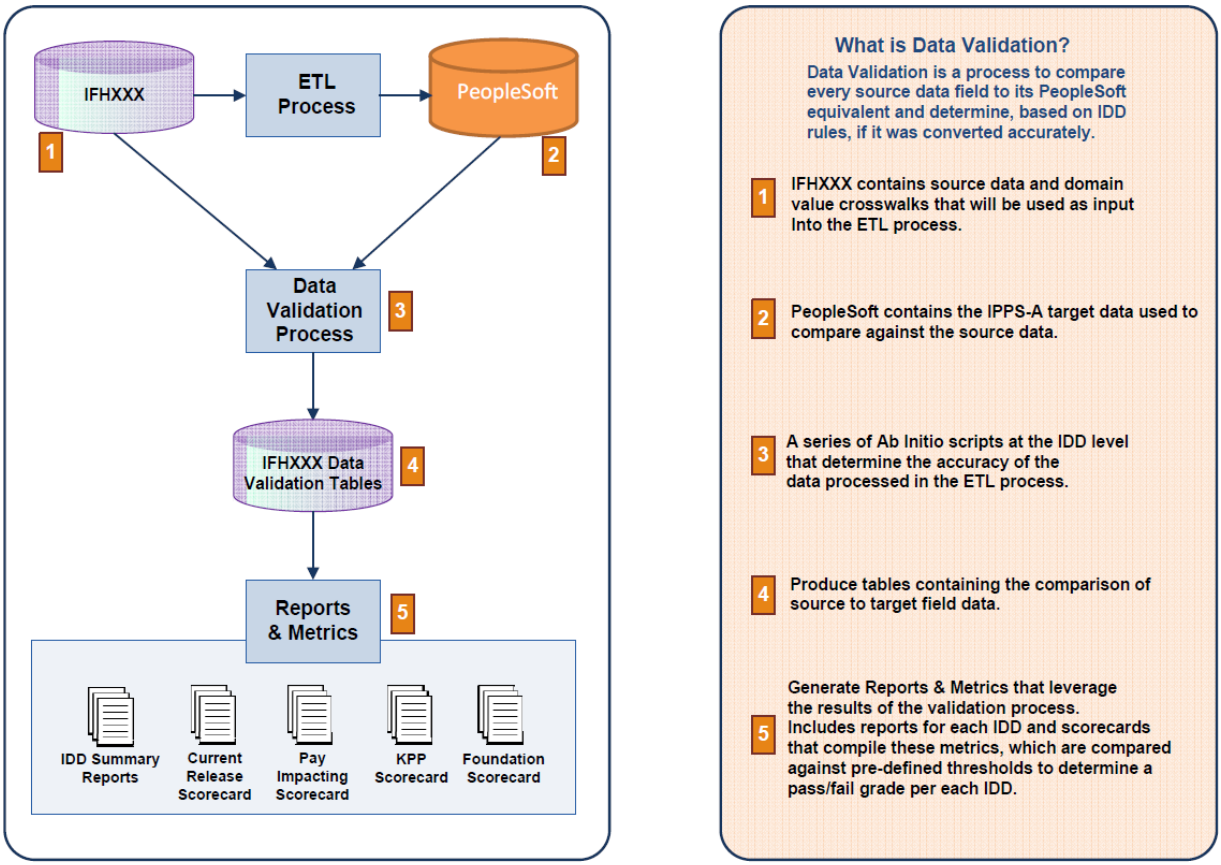

Design of Experiment

The DOE presented in this Appendix is a high-level approach that is applicable to all Increment II Releases.

- **Specification Based Testing:** Specification Based Testing (SBT) will be used to test the software implementation of IPPS-A unique business processes. IPPS-A PMO T&E Branch will utilize a combination of the specification based techniques to decompose and conduct a detailed analysis of system requirements related to IPPS-A unique business processes for all Increment II Releases. The output of the analysis will assist the tester in determining the type and quantity of test scripts that are required to ensure adequate test coverage of each system requirement. To ensure adequate test coverage of requirements related to IPPS-A unique business processes, and also to minimize the total number of test scripts required to meet that coverage, the primary technique to be used will be Combinatorial Analysis.
- **Combinatorial Analysis:** The key insight underlying this method is that not every parameter contributes to every failure and most failures are triggered by a single parameter value or interactions between a relatively small number of parameters. To detect interaction failures all possible pairs of parameter values are covered by at least

one test. The IPPS-A T&E Branch will use the Automated Combinatorial Testing for Software (ACTS) tool that has been developed by the National Institute of Standards and Technology (NIST) to generate the list of test cases using up to six-way parameters per test case for each IPPS-A unique Business Process.

Pair wise testing is a combinatorial software testing method that, for each pair of input parameters to a system, tests all possible discrete combinations of those parameters. The reasoning behind pair wise testing is that the simplest defects in a program are generally triggered by a single input parameter. The next simplest category of defects consists of those dependent on interactions between pairs of parameters, which can be caught with pair wise testing.

The majority of cases will look at strength-2/3 combinatorial designs based on the ACTS tool. These will include the more complicated unique business processes/requirements with five or more factors. Simpler processes with less than five factors will use pair-wise and decision table testing as explained below. The ACTS tool will be used in DT to test requirements and business rules where a high assurance of defect discovery is required, where design is high complexity, and where there exists high criticality to the Customer.

The ACTS tool uses a NIST developed algorithm that compresses combinations of parameters into a small number of tests and includes support for constraints and test coverage measurements. The use of the ACTS tool will be used to provide a measurable value to the PMO and ATEC to answer the question “How thorough is the test set?” ACTS results will be exported into Excel and used to generate test scripts in OPA and UFT.

Figure D-2 below shows the output of the ACTS tool for a test scenario to test a member’s eligibility for Diving Duty Special Pay. All of the Business Rules for this scenario are all “and” situations thus the ACTS tool was used to generate a Negative Test Case Array and the Positive Test cases were set as the constraint. This allows this scenario to be tested using all test automation and no prior manual determination of test outcomes. In the example below, 4 variables directly referencing the applicable business rules were created and designed to have Boolean True/False responses and the test strength was set to 4 way interaction. The variable Type_Duty was split and defined as 2 sub variables due to the associated Business Rule “or” structure. This allowed for keeping all variables as Boolean responses. The ACTS tool generates 15 test cases and the tester adds the Positive test case back to the test set and then copies the test cases again to account for the split Type_Duty variable. The resulting 32 test cases provide 100% test coverage of all 4-way interactions of the 4 Business Rules.

Figure D-2: ACTS Tool Output

Test Result | Statistics

	ASSIGN_DD	PROFICIENCY	TYPE_DUTY	HD_2
1	true	true	true	false
2	true	true	false	true
3	true	true	false	false
4	true	false	true	true
5	true	false	true	false
6	true	false	false	true
7	true	false	false	false
8	false	true	true	true
9	false	true	true	false
10	false	true	false	true
11	false	true	false	false
12	false	false	true	true
13	false	false	true	false
14	false	false	false	true
15	false	false	false	false

Test Case No.	Assign_DD	Proficiency	Type_Duty (C1 for Test Case 1-16 and C2 for Test Case 17-32))	HD_2
1	true	true	true	false
2	true	true	false	true
3	true	true	false	false
4	true	false	true	true
5	true	false	true	false
6	true	false	false	true
7	true	false	false	false
8	false	true	true	true
9	false	true	true	false
10	false	true	false	true
11	false	true	false	false
12	false	false	true	true
13	false	false	true	false
14	false	false	false	true
15	false	false	false	false
16	TRUE	TRUE	TRUE	TRUE
17	true	true	true	false
18	true	true	false	true
19	true	true	false	false
20	true	false	true	true
21	true	false	true	false
22	true	false	false	true
23	true	false	false	false
24	false	true	true	true
25	false	true	true	false
26	false	true	false	true
27	false	true	false	false
28	false	false	true	true
29	false	false	true	false
30	false	false	false	true
31	false	false	false	false
32	TRUE	TRUE	TRUE	TRUE

The IPPS-A Test WIPT and the ATEC DOE team have developed an ongoing collaborative relationship with the NIST ACTS tool developers. The Test WIPT will continue to leverage the knowledge and collaborate with them to enhance the ACTS tool and combinatorial testing for software methodology specifically for ERP software programs with very large numbers of Business Rules and requirements.

In addition to the use of the ACTS tool the below manual techniques will be used:

- Decision Table Analysis
- Equivalence Partitioning
- Boundary Value

- **Decision Table Analysis:** Decision table analysis will be used for determining the minimum number of test scripts required to test the system against a system requirement related to IPPS-A unique business processes that contain multiple logical conditions or

factors. When creating decision tables, the specification will be analyzed, and conditions and actions of the system will be identified.

The input conditions (factors) and actions are most often stated in such a way that they must be true or false. The decision table contains the triggering conditions, often combinations of true and false for all input conditions, and the resulting actions for each combination of conditions. Each column of the table corresponds to a business rule that defines a unique combination of conditions and which result in the execution of the actions associated with that rule. The coverage standard that will be used will be to have at least one test (test script) per column in the table that typically involves covering all combinations of triggering conditions.

The use of this technique allows for an efficient means of minimizing the number of test scripts and, therefore, the number of tests that are required to verify the system against all of the system requirements.

- **Equivalence Partitioning:** Inputs to the software or system are divided into groups that are expected to exhibit similar behavior, so they are likely to be processed in the same way. Equivalence partitions (or classes) can be found for both valid data, i.e., values that should be accepted and invalid data, i.e. values that should be rejected. Partitions can also be identified for outputs, internal values, time-related values (e.g., before or after an event) and for interface parameters (e.g., integrated components being tested during integration testing). Tests can be designed to cover all valid and invalid partitions.

  Equivalence partitioning is not a standalone method to determine test cases. It has to be supplemented by boundary value analysis. Having determined the partitions of possible inputs, the method of boundary value analysis has to be applied to select the most effective test cases out of these partitions.

- **Boundary Value:** Boundary value analysis is a software testing technique in which tests are designed to include representative values. Values on the minimum and maximum edge of an equivalence partition are tested. The values could be either input or output ranges of a software component. Since these boundaries are common locations for errors that result in software faults, they are frequently exercised in test cases.

Business Process Effectiveness

OT will confirm that the IPPS-A business processes are effective for all users. OTC will collect Task Performance Forms (TPF) to classify transactions as successful or not successful based on pre-defined criteria. OT is an uncontrolled test event with users conducting their regular mission. OTC will attempt to collect minimum sample sizes by estimating the level of activity during the LUT period and positioning data collectors accordingly. OTC will supplement LUT data with SAT data for measures not expected to achieve minimum sample sizes during LUT. OT will apply the following factors, levels, and statistical analysis methodologies:

- **Release 2 LUT:** IPPS-A will be available to the ARNG at Release 2. Table D-1 outlines the factors and levels that will be used to evaluate business process success at the Release 2 LUT.

Table D-1: Factors and Levels for Business Process Success at the Release 2 LUT

Factors	**Levels**
Business Process	Recorded, 25 Total

Table D-2 shows the minimum sample size for each business process at the Release 2 LUT. The minimum sample size will confirm that business processes are 90-percent successful with 80-percent confidence using the Clopper-Pearson method.

Table D-2: Minimum Sample Size for Business Process Success at the Release 2 LUT

Failures	Minimum Sample Size for Each Business Process
0	16
1	29
2	42

Table D-3 shows the number of TPFs that OTC expects to collect at the Release 2 LUT. This estimate assumes that the PA National Guard will perform the same number of transactions it performed during the LUT period the prior year and 20 percent of the transactions will result in a TPF. SAT sample sizes are included to show how OTC will combine LUT data with SAT data to achieve minimum sample sizes.

Table D-3: Expected TPF Collection at the Release 2 LUT and SAT

Business Process	**Release 2 LUT**		**SAT**	**TOTAL (SAT+LUT)**
	Transactions	TPFs	TPFs	TPFs
BP0010: Process Position Table Maintenance/Unit Level Manning	319	63	2	***65***
BP0080: Process Hire/Rehire	129	25	2	***27***
BP0120.1: Process Automatic/Decentralized Promotions	370	74	2	***76***
BP0120.2: Process Semi-Centralized Promotions	35	7	9	***16***
BP0121: Process Centralized Promotions	26	5	11	***16***
BP0130: Process Demotions	42	8	8	***16***
BP0151: Process Voluntary Retirement	0	0	16	***16***
BP0160: Process Involuntary Retirement	0	0	16	***16***
BP0170: Maintain and Report Duty Status	0	0	16	***16***
BP0230: Finalize Separation, Retirement and Discharge	135	27	2	***29***
BP0240: Process Voluntary Separation	0	0	16	***16***
BP0260: Process Self Service/Personnel Action Request	870	174	2	***176***
BP0262: Maintain Personnel Restriction Information	300	60	2	***62***

BP0270: Record Member Physical Fitness Information and Administer Remedial Fitness Program	665	133	2	***135***
BP0310: Record Member Performance Evaluation	356	71	2	***73***
BP0410: Identify License/Certificate Renewal and Training Requirements	287	57	2	***59***
BP0540: Process Member Duty Participation	38	7	9	***16***
BP0550: Process Assignments/Transfers	933	186	2	***188***
BP0555: Manage Strength/ Requisitions/ Deployment Availability	543	108	2	***110***
BP0560: Manage Group Build/Mass Update Actions	0	0	16	***16***
BP0670: Process Individual Awards	784	156	2	***158***
BP0670.3: Process Medals and Ribbons	0	0	16	***16***
BP0722: Process Involuntary Discharge	0	0	16	***16***
BP1050: Maintain Member Benefits	66	13	3	***16***
BP1070: Auditing	0	0	16	***16***

- **Release 3 LUT:** IPPS-A will be available to the Regular Army and USAR at Release 3. Table D-4 outlines the factors and levels that will be used to evaluate business process success and timeliness.

  Table D-4: Factors and Levels for Business Process Success at the Release 3 LUT

Factors	Levels
Component	2 (Regular Army, USAR)
Business Process	Recorded, ~28 Total

  The minimum sample size for each business process at the Release 3 LUT is the same as Table D-2 shows for the Release 2 LUT. OTC will estimate the number of transactions expected to occur during the Release 3 LUT and combine LUT data with SAT data to achieve minimum sample sizes.

- **IOT:** IPPS-A will be available to the ARNG, Regular Army, and USAR at Release 2. Table D-5 outlines the factors and levels that will be used to evaluate business process success at IOT.

  Table D-5: Factors and Levels for Business Process Success at IOT

Factors	Levels
Component	3 (ARNG, Regular Army, USAR)
Business Process	Recorded, ~31 Total

  The minimum sample size for each business process at IOT is the same as Table D-2 shows for the Release 2 LUT. OTC will estimate the number of transactions expected to occur during IOT and combine IOT data with SAT data to achieve minimum sample sizes.

- **Release 5 LUT:** IPPS-A will be available to the ARNG, Regular Army, and USAR at Release 5. Table D-6 outlines the factors and levels that will be used to evaluate business process success and timeliness.

  Table D-6: Factors and Levels for Business Process Success at the Release 3 LUT

Factors	Levels
Component	3 (ARNG, Regular Army, USAR)
Business Process	Recorded, Number TBD

  The minimum sample size for each business process at the Release 3 LUT is the same as Table D-2 shows for the Release 2 LUT. OTC will estimate the number of transactions expected to occur during the Release 3 LUT and combine LUT data with SAT data to achieve minimum sample sizes.

APPENDIX E CYBERSECURITY

Cybersecurity testing and assessments will be performed during IPPS-A test activities in accordance with the DoD "Cybersecurity Test and Evaluation Guidebook, v.1.0 dated 1 July 2015, and the DOT&E Memorandum "Procedures for Operational Test and Evaluation of Cybersecurity in Acquisition Programs" dated 1 August 2014. Cybersecurity testing will be performed during both Developmental and Operational testing to determine compliance with security controls. The testing of the IPPS-A components will comply with DoD and Army requirements that all systems be certified and accredited in accordance with the RMF and in accordance with the IPPS-A Security Plan. During Operational Testing, an NSA-certified adversarial threat team will execute an adversarial assessment IAW the approved Threat Test Support Plan. Threat portrayal during Operational Test will be independently validated by TRADOC to be a realistic threat.

IPPS-A PMO will conduct a robust, high fidelity continuous evaluation of IPPS-A cyber defense capability to mitigate system vulnerabilities. Cybersecurity test events will be conducted during each phase as outlined in Table E-1 below.

Table E-1: Cybersecurity Test Events, Test Phases and Environments

Test Event	Test Phase	Environment	Minimum AO Authorization
Cyber Table Top Exercise	System Developer Test	N/A	N/A
Cooperative Vulnerability Identification	System Developer Test	Production-Representative	IATT
Adversarial DT	System Developer Test	Production-Representative*	IATT
Cooperative Vulnerability and Penetration Assessment	Government Acceptance Test	Production-Representative*	IATT
Adversarial Assessment	Operational Test	Production	ATO
Cyber Economic Vulnerability Assessment	Operational Test (Release 4)	Production	ATO
*These events will be performed in the production environment for Release 2 only.			

A TCOT will portray standard CNO threats to assess the security vulnerabilities of IPPS-A. Insider, outsider, and nearsider threats will employ standard CNO methodology for system exploitation (such as, foot printing, scanning, enumeration, exploitation, and attack). Specific activities and tools used by the threat to achieve objectives will be driven by the data available to

the threat, levels of access achieved, likelihood of success, response of the defense, and the ability to continue to evade detection. The TCOT will produce a separate report based on the results of Red Team (opposing) testing.

Verification of Fixes (VoF) consists of a Cybersecurity vulnerability analysis of prior system vulnerabilities to ensure that they have been mitigated, and that no new vulnerabilities have been introduced into the system. The verification of fixes will occur following DT & OT Adversarial Assessments for each Release and as needed during Increment II to ensure mitigation of system vulnerabilities.

The IPPS-A Cyber Security Vulnerability and Patch Management Plan outlines the processes and procedures that IPPS-A PMO has implemented to ensure compliance with all applicable Information Assurance Vulnerability Alerts (IAVAs).

Although the PMO will execute the RMF, implementation of the RMF does not fully ensure a program is prepared to operate in a contested cyber environment. This can only be verified by testing and evaluation. Developmental T&E includes assessment, verification, and validation of all security controls, including Administrative and Management Controls, Technical Controls, and Operational and Procedural Controls, as well as all performance parameters.

Cybersecurity DT&E

Developmental Cybersecurity testing will be performed periodically during the IPPS-A testing activities for each Release and as deemed appropriate based on an analysis by ATEC regarding the need for and scope of each of the phases. The two phases of Developmental Cybersecurity testing for the IPPS-A program are described below.

- **Cybersecurity Table Top (CTT).** The program will sponsor a DASD(DT&E) facilitated CTT exercise early in IPPS-A development to explore the potential effects of cyber offensive operations on IPPS-A. The objective of the CTT is to identify the highest risk attack vectors (likelihood of exploitation and severity of impact) to focus cyber defense activities in the design and employment of IPPS-A. The CTT will consist of a war game among a control team representing the program, an operational team representing the functional user, and cyber opposition force (OPFOR) representing the cyber threat. The desired output of the CTT is to generate actionable information on high priority/high mission impact cyber threats to focus development and test efforts on those threats. The primary CTT event will be a 3-4 day exercise conducted in Crystal City. The event will consist of:
    - Reconnaissance: This will be conducted by the OPFOR and may begin prior to the CTT event using open source information. During the event, cooperative reconnaissance will consist of open discussion among the OPFOR, control team, and operational team to fully understand how the system works and is used by the operational team.
    - Mission Planning: This is conducted by the operational team and may also begin prior to the event. The operational team will develop one or more mission scenarios that represent key operational missions of the system.
    - Attack Planning: This is conducted by the OPFOR, based on the reconnaissance to develop potential attack surfaces.

  - Mission Execution: This is jointly conducted by the OPFOR, control team, and operational team, where the OPFOR may describe early pre-mission attack activities. The operational team then describes the mission execution while the OPFOR describes attack activities against the mission. The operational team and control team will describe both system and operational capabilities to mitigate the threats. This will continue until all scenarios are completed.
  - Risk Analysis: At the conclusion of each scenario or at the end of the overall mission, the control team, OPFOR, and operational team will discuss the impact of the OPFOR attack and control team/operational team mitigation on the mission and the likelihood of employing the attack to result in an overall risk assessment of the attack surface.

- **Cooperative Vulnerability Identification (CVI).** This phase includes detailed test planning and execution of vulnerability testing. This testing and analysis is performed to support and provide feedback to the Critical Design Review (CDR) and as input to and in preparation for the Test Readiness Review (TRR). The purpose of this phase is to identify vulnerabilities that may be fed back to systems designers, developers, and engineers so that mitigations can be implemented to improve resilience. This test, analyze, fix, test process provides the early and ongoing feedback, addressing cybersecurity vulnerabilities throughout system development so that mitigations may be cost effectively implemented early in the acquisition lifecycle. CVI's will be conducted periodically throughout PLT for each release by PMO-selected Blue Teams. The final CVI just prior to DIT for each release will be conducted by an ATEC-selected Blue Team.
- **Adversarial DT.** The Adversarial Cybersecurity DT&E phase includes an evaluation of the system's cybersecurity in a mission context, using realistic threat exploitation techniques, while in a representative operating environment. Using the Vulnerability Report, the Security Assessment Report, and DT&E artifacts, the DT team performs a cybersecurity kill chain analysis to determine what an attacker could do if it gained access to the system, and how the system would respond to such attacks. It includes adversarial assessment testing, which emulates the threats described in the program's validated threat capabilities document. The PMO plans to involve the use of a Cyber Range to reduce the risk of collateral damage to live networks and authoritative data sources. Adversarial DT's will be conducted periodically throughout SDT for each release by PMO-selected Red Teams. The final Adversarial DT conducted during DIT for each release will be conducted by the Threat Systems Management Office (TSMO).

The PMO plans to leverage use of a cyber range to perform early evaluation of the system's cybersecurity posture for future releases. Activities will include identifying potential cyber-attack avenues, blue team vulnerability assessments, adversarial assessments and the validation of critical operational mission threads.

Cybersecurity OT&E

Operational Cybersecurity testing will be performed during the IPPS-A testing activities for each Release and as deemed appropriate based on an analysis by ATEC regarding the need for and

scope of each of the phases. The three types of operational cybersecurity testing for the IPPS-A program are described below.

- **Cooperative Vulnerability and Penetration Assessment (CVPA).** The OTA will employ the Army Research Laboratory Survivability/Lethality Analysis Directorate (ARL/SLAD) to perform Cooperative Vulnerability and Penetration Assessments (CVPAs) during both the LUT and the IOT&E prior to Adversarial Assessments. Provided the system is in its intended operational environment, ATEC may choose to conduct the CVPA during the SAT event. ARL/SLAD will perform the CVPAs on an operationally representative IPPS-A environment, including the use of local cybersecurity defenders such as system operators, maintainers, and system administrators to support data collection (e.g., through interviews). ARL/SLAD will execute vulnerability and penetration testing using their accredited tools and processes, which include automated scans and manual inspection. ARL/SLAD will conduct assessment activities from the insider, outsider, and nearsider postures. ARL/SLAD will collect data and provide a full report and all artifacts to ATEC. The OTA will collect data in accordance with Attachments A, B, and C of the DOT&E cybersecurity memo.
- **Adversarial Assessment (AA).** The OTA will conduct Adversarial Assessments (AAs) during both the LUT and the IOT&E using the Army TSMO to portray the cyber threat. TSMO is an NSA-certified, USCYBERCOM-accredited cyber threat team. TSMO will execute the AAs using their accredited tools and processes to portray a representative cyber threat (insider, nearsider, and outsider) in accordance with the IPPS-A STAR and the IPPS-A Threat Test Support Package. The OTA will conduct the assessment in the context of IPPS-A mission operations, with representative data sources, network traffic, and external interface connectivity. The cyber threat team should attempt to induce mission effects by fully exploiting vulnerabilities to support evaluation of operational mission risks. The assessment will include operationally representative network defense including local operator, maintainer and administrator defense functions and will measure the detect and react abilities of IPPS-A and interoperating with the local and non-local cyber defenders (including upper tier computer network defense providers). The OTA will collect data in accordance with Attachments A, B, and C of the DOT&E cybersecurity memo.
  DISA is expected to be the Cybersecurity Services Provider (CSSP) providing Traditional CSSP at the Boundary and Operating System (OS) level for the IPPS-A system. The Service Provider is in the process of defining a CSSP Subscription service offering that would include CSSP coverage for IPPS-A, expected to be available before the end of FY 18.
- **Cyber Economic Vulnerability Assessment (CEVA).** Following the fielding of Release 4, the OTA will conduct a Cyber Economic Vulnerability Assessment (CEVA) that includes the development and execution of exploitation scenarios (Cyber Economic Threat Analysis & Cyber Economic Scenario Testing) and a review of financial transactions for evidence of fraud (Financial Transaction Analysis). Fraud detection generally involves an analysis of 6-12 months data to detect past fraudulent activities and penetration activities. The CEVA will include the following activities:
  - **Cyber Economic Threat Analysis** – Development of a set of economic exploitation scenarios derived from threat analysis. This analysis should consider

the known or potential vulnerabilities of the system and its associated control processes in question, and establish test cases by which the financial security of the system may be evaluated.

- **Cyber Economic Scenario Testing** – Tests threat vectors against the production system under realistic operating conditions, and with the participation of personnel who sufficiently understand the system and associated control processes and how they can be exploited. Testing should encompass scenarios ranging from small-scale fraud attacks that might result in significant economic degradation to the DoD or the U.S. Government.
- **Financial Transaction Analysis** – Review a representative set of past and current financial transactions for evidence of fraudulent activity (e.g., fraud indicators that identify exceptions or transactions that fall outside normal activity).

- **Cybersecurity Test Architecture.** The architecture, proposed test boundary for the CVPA, AA, CEVA and external interfaces of the IPPS-A are shown in Figure E-1 below.

Figure E-1: Overview of the IPPS-A Functional Architecture

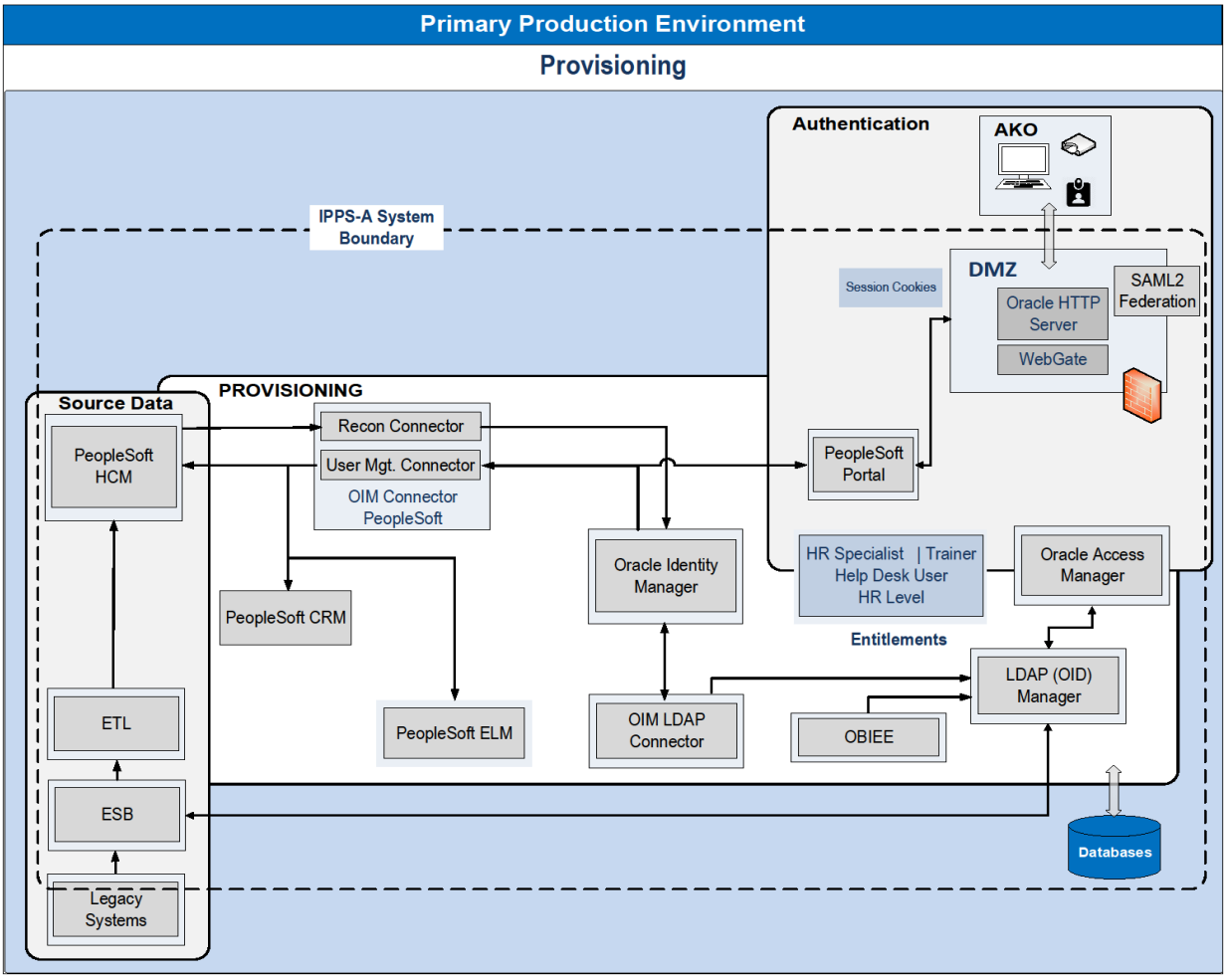

APPENDIX F RELIABILITY

Reliability Overview

IPPS-A is a Defense Business System whose core is a COTS software product with primary and secondary servers in the DISA owned data centers with an established failover plan. Thus, in accordance with DOT&E guidance, IPPS-A is categorized as a "Software-intensive system characterized by built-in redundancies that result in high reliability for the hardware (or hardware is not a component of the system), leaving the software reliability as the limiting factor." IPPS-A Reliability Growth will be addressed using Reliability Growth Tracking Curves in each Release as well as the monitoring and reporting of defined Software Maturity metrics. Multiple tracking curves will be constructed using the AMSAA RGTC tool to track both top-level reliability metrics (e.g., system aborts) as well as lower-level metrics (e.g., essential function failures and RREs). Tracking lower-level metrics will allow for a more granular assessment of reliability and given their more frequent occurrence, will give a higher resolution view of reliability growth early on in system testing during the PLT/CAT and DIT Test phases.

The IPPS-A Reliability Program Plan's backbone is engineering activities that support the development of a highly reliable system and include but are not limited to (1) ensuring high reliability of COTS components by reviewing Oracle internal RAM data and reports as well as software releases and defect fixes, (2) the development of an approved task-based Failure Definition and Scoring Criteria, (3) quantifying the expected loads and stresses on the system infrastructure including the planned number of concurrent users, the planned volume of transactions, publishing the minimum bandwidth requirements needed by downstream remote locations to establish appropriate connectivity, and executing application and interfaces performance testing, (4) conducting a Reliability Scorecard assessment using the AMSAA Scorecard tool, and (5) maintaining a FRACAS system utilizing the HP ALM database. These activities are also documented in the IPPS-A System Engineering Plan.

Reliability Risk

IPPS-A System Reliability is a program level Risk being tracked and mitigated across the life cycle. The IPPS-A Risk Statement for Reliability is "If the system is not reliable, then Soldiers, Commanders, and HR professionals are at risk of experiencing degraded or denied personnel pay system capabilities." The system risk mitigation will be in place for all Releases. The system risk has 11 documented mitigation steps for Release 2 that are being tracked in the program risk management tool outlined below:

1. Develop a test strategy to provide an early government assessment of reliability during the CAT test phase.
2. Host the Army Center for Reliability Growth short course training for the PMO and SI.
3. Establish system specifications for the level of reliability mandated in HLO 3.
4. Develop an approved Increment II Release 2 Failure Definition and Scoring Criteria document.
5. Review sprint backlog of tasks and prioritize items that impact system reliability.
6. Integrate system reliability requirements into the Sprint software builds.

7. Develop and maintain a comprehensive reliability growth tracking plan in the System Engineering Plan to assist in determining and tracking reliability growth.
8. Conduct an evaluation using the AMSAA Software Reliability Scorecard to verify use of reliability best practices.
9. Conduct an analysis of Sprint Software builds during the PLT test phase to identify early issues that are impacting system reliability.
10. Use the draft FDSC in the System Development Test Phase (PLT/DIT) to score reliability failures prior to LUT/OT.
11. Use the approved FDSC in the Government Acceptance Test Phase (SIT/SQT/SAT) to score failures prior to LUT/OT.

Reliability Working Group

All IPPS-A Reliability engineering activities and testing is being monitored by the program Reliability Working Group. The IPPS-A RWG is a collaborative team that is responsible for developing and maintaining the reliability growth plan in accordance with Army doctrine, the program Reliability Growth Tracking Curves, program Failure Definition Scoring Criteria (FDSC) and facilitating Design for Reliability activities. The Reliability WG also plans and tracks the program level System Reliability risk and plans any additional systems engineering and test and evaluation activities and schedules, as necessary for the Reliability Growth program. The IPPS-A RWG is chaired by the Systems Engineering and Architecture PMO Branch Chief and includes members representing DASD(DT&E), DASD(SE), FMD users, ATEC, AMSAA CRG, PMO T&E, PMO Lead Systems Engineer, and PMO Infrastructure as well as Subject Matter Experts from the SI team.

Reliability Growth Tracking Curves and Software Maturity Metrics

In accordance with DoD policy, IPPS-A will utilize the AMSAA Reliability Growth Tracking Model — Continuous (RGTMC) tool across the Increment II Test lifecycle to track and monitor the program's System Aborts that happen during test. The purpose of the AMSAA RGTMC is to assess the reliability improvement of a system during development. The inputs into the model will be the usage of the system that is measured on a continuous scale and individual failure times. The model will gauge demonstrated reliability versus planned reliability and will provide statistical point estimates and confidence intervals for MTBSA and growth rate. As required, the Tracking Curve will be updated after each test event and published for Stakeholder review. Figure F-1 below shows a graphic example of the RGTC that is produced by the AMSAA RGTMC tool.

Figure F-1

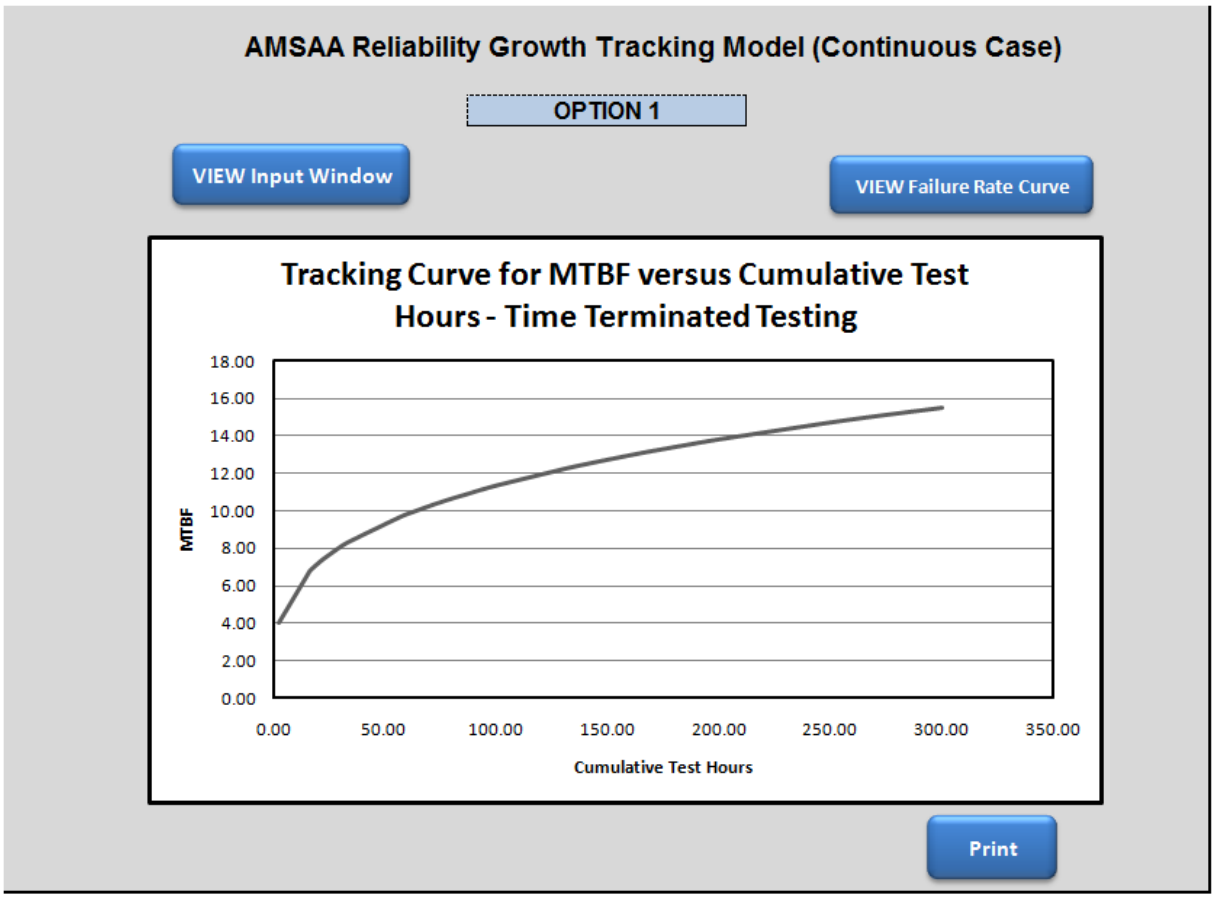

During DT events, TIRs, help desk tickets, and SPRs will be documented in a web-based test tool HP ALM. Additionally, ATEC will utilize the Army Test Incident Reporting System (ATIRS) to track defects. IPPS-A Server logs and maintenance logs will also be used as data sources for the RAM evaluation. Each SPR, TIR, and/or incidents from server logs will be officially scored via the IPPS-A RAM Scoring Conference using the user's FD/SC as a guide. In collaboration with the ATEC RAM evaluator, the program has decided to conduct DT RAM scoring conferences as part of the DT Test Review Boards. The ATEC RAM evaluator will be given access to the HP ALM tool to review all SPRs and will participate in the RAM Scoring Conferences as a voting member in accordance with AR 702-19.

After the scoring conferences have been completed a RAM Assessment Conference (per Department of Army Pamphlet (DA PAM) 70-3) will be conducted in which results of all root cause analyses will be reviewed and the system reliability assessed based on the proposed Corrective Action and estimated Fix Effectiveness Factors (FEFs). These results will be utilized to assist in the determination of system software maturity.

Additionally, IPPS-A will monitor the status of system trouble reports for each Release. The critical tenant for IPPS-A reliability growth will be the reduction of system software defects over time. During testing, implementation, and fielding, reliability growth and the Mean Time

Between System Abort (MTBSA) metric will be shown by the reduction of new defects discovered and as well as the correction of those defects discovered previously. The process will be started over for each Release as the addition of new functionality leads to the possibility and discovery of new defects (failure modes).

IPPS-A software failure profile will be tracked through monitoring SPRs over time. This will include the tracking of failure data throughout the SDT and GAT test events to support analysis of trends and changes to software maturity metrics, including the number and severity of SPRs, length of time between defect discovery and resolution, and defect priority upgrades and downgrades. The PM will conduct trend analyses to verify that a decrease in the number and severity of software failures for each subsequent test event from PLT through SAT is occurring. These trend analyses will also help to determine if there are any adverse failure modes related to specific system functionality.

The IPPS-A system will be subject to the usual vendor release software updates, upgrades, service packs, and security updates associated with commercial software products. As updates and upgrades to the COTS are released by the vendor, these releases will go through a governmental review process before the government issues a directive authorizing installation of the vendor release. As with any commercial software, as it gets older through its normal life cycle process, there will be improvements and enhancements to functionality which could impact reliability. Regression testing will occur after all updates, upgrades, and enhancements to ensure these modifications do not negatively impact the IPPS-A system. During operational test events (i.e. LUT and SAT), it is understood that the IPPS-A software configuration must remain constant; no addition of functionality or software changes can occur. All changes of software must first be approved by ATEC if occurring during a test event.

Configuration Management (CM) Activities

IPPS-A CM has five interrelated sub functions, each dependent on the others to provide information necessary for successful execution of CM activities. The CM sub-functions detailed in the IPPS-A Configuration Management Plan, V3.0 dated 21 October 2016 include:

- Configuration Identification;
- Configuration and Change Control;
- Version Control
- Documentation and Data Management;
- Configuration Status Accounting;
- Configuration Verification & Audit.

Configuration Management Relationship to Test and Evaluation

The T&E Branch is responsible for the verification and validation function that ensures all Functional, Allocated, and Initial Product Baseline requirements have been met in the design and development of IPPS-A by the SI.

Verification and validation activities are performed against current approved baselined requirements through T&E. The SI is responsible for verification against the Functional and Allocated Baseline. The T&E Branch is responsible for validation of the Initial Product Baseline

and the Product Baseline. CM provides control of the baselines, environments, and test artifacts. Testing includes verification/qualification tests and repetitive acceptance testing performed on each Configuration Item (i.e., software, hardware, etc.). Specific CM activities that support Test and Evaluation are shown in Table F-1.

Table F-1: Test and Evaluation and Configuration Management Activities

Test and Evaluation	Configuration Management
Test documentation and results for each phase of testing are traced to the requirements and are verified and validated using the documented acceptance criteria and exit criteria as stated in the TRR.	**Data Management:** Test artifacts are retained within the Hewlett Packard (HP) Application Lifecycle Management (ALM) Test Tool and the CM Library; and are under version control.
The TRB, chaired by the IPPS-A T&E Branch Chief, meets daily, as required, for the SDT phase as well as all government run testing. The TRB adjudicates Test Incident Reports (TIRs) and outstanding Trouble Tickets. If a TIR cannot be resolved without additional work, it becomes a System Problem Report (SPR), prioritized by severity 1 through 5. Severity 1 indicates the mission cannot be accomplished and all testing stops until the issue is resolved. Each test phase must resolve all severity 1s and 2s before proceeding to the next test event.	**Configuration Change Management and Deficiency Handling:** The TRB may determine that the TIR and/or Trouble Ticket is a system defect that must be fixed by the SI. If a change is required then then the TIR becomes a SPR. CM oversees the handling of Change Requests (CRs) and SPRs. **Status Accounting:** CM ensures that IPPS-A baselines and environments are maintained and that fixes or changes to the system are approved, recorded, tracked, and reported.
TRRs are held prior to each Test Event. Entry criteria includes verification that any involved environment is synchronized with the environment to be tested. ETRs are held prior to the closure of each test event to ensure the exit criteria were met.	**Configuration Audit:** CM performs a Baseline Configuration Audit (BCA) prior to and immediately after each Test Event to ensure that what is being tested includes the approved baselines, and that any changes to the approved baseline necessitated by fixes or changes identified through test are accounted for in the baseline.

Test and Evaluation	Configuration Management
After the Developer Integration Test (DIT) is successfully completed, the SI delivers the product to the government through a formal Technical Review, assuring that all deliverable documentation is included in the Technical Data Package (TDP).	**Configuration Change Control:** All products developed by the SI or by the government staff are reviewed, approved, and placed under CM control. The TDP is reviewed to ensure that a complete record of the current status of the system is delivered. This includes environments, software, hardware, infrastructure, and a record of all changes and fixes, implementations and proposed changes.

Deficiency Reporting

This section summarizes the process for documenting, managing and tracking SPRs. The documenting, management, and tracking of SPRs will be accomplished using the web-based HP® ALM. This tool will be shared by the SI and IPPS-A PMO to track and maintain SPR status throughout the T&E life-cycle. SharePoint will be used to report the status of the SPRs to the test community and stakeholders.

SPRs are system level issues that are generated from Trouble Tickets (generated prior to or post deployment) or TIRs, recorded, and tracked by the SI and IPPS-A PMO throughout the SPR life-cycle. The SPR life-cycle refers to the processes that an SPR go through as it progresses from "Open" status to "Closed" status. The process that opens an SPR when a Trouble Ticket cannot be resolved is contained in the Customer Support Plan.

The SI and IPPS-A PMO will be responsible for maintaining the designated test tool repositories to track CRs and SPRs as they are generated and as they progress through the Change Request (CR) and SPR life-cycle. The CRs and SPRs are entered and tracked by the parent Baseline in which the deficiency was found. In addition, the CRs or SPRs will be tracked to include those that are spun-up or spun-down to related baselines.

The ten stages of the SPR life-cycle are listed and defined in Table F-2 below. Each of the ten stages has specific actions that must be taken before the SPR can move onto the next stage.

Table F-2: SPR Status Codes

SPR Status Code	Criteria
Open	A TIR has been converted to a SPR or a new SPR has been created.
Assigned	An SPR will move from an "Open" status to an "Assigned" Status once the SPR has been assigned to an individual (i.e. SI Developer, SI Technical Writer) for resolution.
Working	An SPR will move from an "Assigned" status to a "Working" Status once the SPR is in the process of being worked by the SI.

SPR Status Code	Criteria
Fixed	A SPR will move from an "Working" status to a "Fixed" status once the SPR has been resolved, unit tested, and is ready for migration into the test environment.
SI Test	An SPR will move from a "Fixed" status to a "SI Test" Status after the SI has resolved the SPR, unit tested the fix, and is ready for the SI Test Team to test.
Resolved	An SPR will move from a "SI Test" status to a "Resolved" status after the SI Test Team has re-tested the fix, regression tested the system, and the recommended fix has passed. If the SI test team fails the recommended fix, the SPR status will be change back to an "Open" status.
PMO Test	An SPR will move from a "Resolved" status to a "PMO Test" status once the fix for the SPR has been migrated to the applicable test environment and is ready for PMO testing.
Complete	An SPR will move from a "PMO Test" status to a "Complete" status once the PMO test team has re-tested the fix, regression tested the system, and the recommended fix has passed. If the PMO test team fails the recommended fix, the SPR status will be change to a "Rejected" status.
Rejected	An SPR will move from a "PMO Test" status to a "Rejected" status if the fix fails PMO confirmation testing. The SPR will then be changed back to an "Open" status.
Closed	An SPR will move from a "Complete" status to a "Closed" status once the SPR has been closed by the TRB.
Reopen	A SPR will move from a "Closed" status to a "Reopen" status if an SPR must be reopen.

All SPRs will be assigned priorities derived from the Institute of Electrical and Electronics Engineering (IEEE) Standard 12207.2 Annex J "Software Lifecycle Processes – Implementation Considerations." This ensures commonality of definitions for SPR that will be applied to all test events. SPRs will not be limited to software and hardware issues but will include all aspects of Human Systems Integration (HSI) and Doctrine, Organization, Training, Materiel, Leadership, Personnel, and Facilities-Policy (DOTMLPF-P) that effect system effectiveness, suitability, and survivability.

For each test event, the tracking of defects throughout the SPR life-cycle will include, at a minimum, the following:

- Total number of SPRs assigned by individual severity (1 through 5);
- Specific SPRs that were downgraded from its original severity to include a severity 1 or 2 to a severity 3 for which workarounds have been identified, approved, tested, documented, and forwarded to OTA for validation during SAT;
- Total number of SPRs in an Open status;
- Total number of SPRs in an Assigned status;
- Total number of SPRs in Working status;
- Total number of SPRs in a Fixed status;
- Total number of SPRs in SI Test status;
- Total number of SPRs in Resolved status;
- Total number of SPRs in PMO Test status;
- Total number of SPRs in a Completed status;
- Total number of SPRs in Rejected status;
- Total number of SPRs in a Closed status.

Deficiency Report Aging

In addition, the age of the SPRs will be tracked by severity so a picture of defect resolution can be constructed to assess progress toward resolution as follows:

- Less than 5 days;
- 6 – 10 days;
- 11 – 15 days;
- 16 – 20 days;
- 21 – 25 days;
- Over 26 days.

The defect data contained in web-based test tool suite will be available to authorized users 24/7 via a web-enabled system. The frequency by which defect reports will be produced and distributed to applicable stakeholders will be identified by the TRB chair.

During SAT and LUT, Army CIO/G6 and AEC will receive the following RAM data:

- Data Center Server Logs, (including security logs) providing 24/7 monitoring of IPPS-A status and operating hours for both the data center and individual users;
- TIRs and Help Desk Tickets may be submitted by Soldiers (during SAT), system operators, and data collectors for every incident and maintenance action;
- Help Desk Tickets submitted by Soldiers (during LUT and IOT&E);
- Maintenance logs that detail every scheduled and unscheduled maintenance or update event.

The ATEC RAM evaluator will convene and chair an OT RAM scoring conference, at the discretion of the ATEC RAM evaluator, during or after SAT, LUT and IOT&E events. The Failure Definition/Scoring Criteria (FD/SC) will be used as a guideline to score all data.

Error correction, re-test, and regression testing are activities that are common to all DT and OT test events through all test phases for each Release. Error correction is a controlled methodology of applying SPR fixes against the product baseline of the Releases under test and applying regression testing activities to other Releases as appropriate. This will ensure that the problems have been resolved without impacting any other capabilities of the IPPS-A Increment II baselines. As fixes are identified against a baseline (product, development or test) they will be corrected in the development environment, placed in a “bucket” under CM control, and implemented at an approved time. An exception to this is a Severity 1 or 2 SPR that requires the implementation of a fix in order to proceed with the developmental test. In this case, the error correction will be implemented and the developmental test will continue.

Recommended fixes for SPRs that will adversely affect cost or schedule will be submitted to the Configuration Control Board (CCB) for adjudication. The CCB will make a determination to apply the fix to the current release or to a future release.

Throughout all activities, testing tools will be available to provide test event owners and user community representatives the capability to:

- Create test scripts and document results;
- Create and execute automated test scripts for regression testing and performance testing;

- Create and manage Test Incident Reports (TIRs);
- Produce metrics and report on TIRs, Trouble Tickets, CRs, and SPRs;
- Allow mapping or traceability of all test artifacts, scripts, results, and TIRs to requirements.

Reliability Test Time Limitation and Mitigation Strategy

As discussed in Section 3.5.4, the limited time period allotted for the T&E phases in the production-representative environment creates a risk for the IPPS-A system to demonstrate the Business Case reliability threshold requirement with high confidence. The current test plan estimates that, for Releases 2 through 5, approximately 1400 operating hours will be collected during each LUT/IOT. DA PAM 73-1 requires that all reliability requirements shall be demonstrated with high confidence (assumed to be 80% unless otherwise defined in an approved TEMP). In order to demonstrate the 672 hour MTBSA requirement with high confidence, IPPS-A would need to incur zero (0) System Abort (SA) failures during the 60 day test event. A MTBSA point estimate and associated confidence bounds will be provided at the end of each event.

Table F-3 provides the probability of IPPS-A demonstrating its 672hr MTBSA Business Case requirement with high confidence for a variety of different test durations. This probability of demonstrating the requirement assumes that the actual reliability of IPPS-A is one and a half times the requirement (1008 hours).

Table F-3: Probability of Demonstrating Requirement

# of Allowable Failures	Test Length (hrs)	Probability of Demonstrating 672hr MTBSA with High Confidence*
0	1440	24%
1	2013	41%
2	2876	46%
3	3707	50%
4	4517	54%
5	5313	57%

*Assumes that the actual reliability of IPPS-A is one and half times the requirement (1008 hrs)

The probability of IPPS-A demonstrating its requirement with high confidence during a 60-day test event is 24%. Assuming the actual reliability of the system is at least 1.5 times the Business Case requirement threshold, increasing the test length to the values shown in Table 3-6 can increase the probability of success (demonstrating the Business Case requirement) at LUT and IOT.

To mitigate and lessen the impact of this test time limitation, the ATEC RAM evaluator and AST Chair and the PMO and FMD have reached an agreement to utilize operationally realistic SAT test hours and associated SPRs in the RAM OT evaluation. During SAT, automated test scripts will be run utilizing HP Unified Functional Tester (UFT) to simulate a realistic load for the purpose of accumulating hours to support the Reliability assessment. UFT will be run outside of normal testing hours, to include nights and weekends to emulate realistic operating conditions.

This will allow the RAM evaluation to include more test hours outside of the limited time scheduled for LUT/OT and increase the probability of demonstrating the MTBSA requirement with high confidence. There is also an opportunity to collect additional hours by continuing the collection of data on the servers for a timeframe immediately following the LUT/IOT test event.

Operational Availability Ao

The formula for A_o shown in HLO 3 (A_o = MTBSA / MTBSA + MTTR), is a standard formula used to define A_o. ATEC will be able to adequately characterize the availability from data captured in SAT and the LUT/IOT for each Release and will not utilize modeling and simulation.

U.S. ARMY

Integrated Personnel and Pay System – Army (IPPS-A)

PART V:
Annex 1 to the
IPPS-A Increment II Post-Milestone B Test and Evaluation Master Plan for Release 2

Version 1.0
12 September 2017

Department of the Army
Program Executive Office Enterprise Information Systems
Integrated Personnel and Pay System - Army Project Management Office
2521 South Clark Street
Arlington, VA 22202

5 INTRODUCTION

5.1 Purpose

The purpose of the annex is to provide Increment II Release 2 specific information and updates to the main IPPS-A Increment II TEMP document relevant to IPPS-A Release 2.

5.2 Scope

This Annex to the IPPS-A Increment II TEMP presents updates and other information specific to Release 2. Together, the IPPS-A Increment II TEMP and this Annex is the complete TEMP for Release 2.

5.3 Release 2 Updates

Not Applicable.

5.4 Release 2 Capabilities

Release 2, Personnel Readiness Management and Essential Personnel Services (ARNG Only), will build upon Increment I capabilities and provide the functionality necessary to subsume Standard Installation/Division Personnel System-Guard (SIDPERS-G) and ETRANS, as shown in Table 5-1, for all ARNG locations. End-to-End Business Process development considerations will be evaluated to support various HR activities to include, but not limited to, promotions/reductions, training requirements, member benefits, duty status, unit level manning, accountability and tracking of all personnel who deploy. It will allow commanders in the field to access timely, accurate, and standardized personnel data for Soldiers in all components. Additionally, it will provide a basic means for identification of Soldiers who should be on payroll.

Table 5-1: Legacy Systems Subsumed by IPPS-A Release 2

Acronym	Full System Name	Description
ETRANS	Electronic Transaction	Assists in data flow between Army Recruiting Information Support System (ARISS) and SIDPERS-ARNG
SIDPERS-ARNG	Standard Installation/Division Personnel System-Army National Guard	Conversion interface of ARNG Departments and Soldier HR Data to include Personal, Job, Assignment, Attachment, Labor Relations, Accomplishments, and Competencies data.

5.5 Release 2.0 Test Schedule

Figure 5-1 is the estimated IPPS-A Increment II Release 2.0 Integrated Test Program Schedule. The schedule displays the overall time sequencing of the T&E phases, events, and milestones. ATEC will provide an operational assessment within 60 days after the end of operational testing.

Figure 5-1: IPPS-A Increment II Release 2.0 Integrated Program Test Schedule

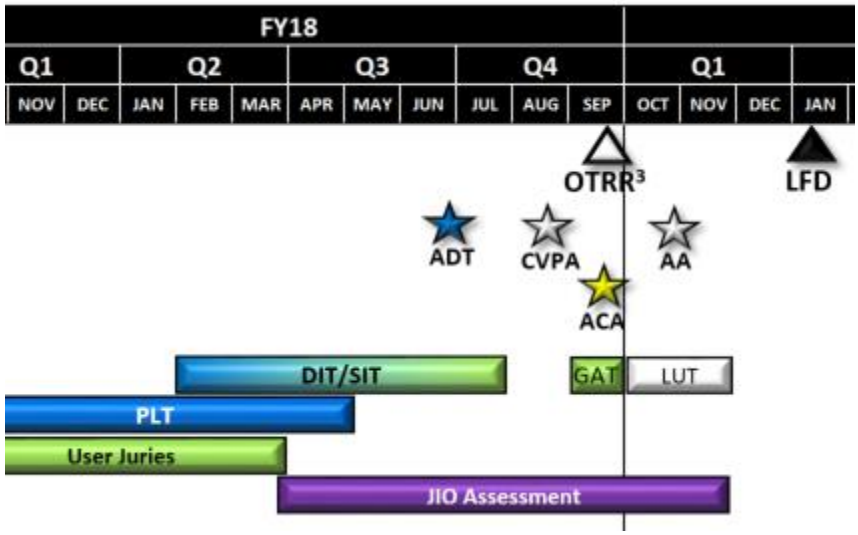

5.6 Release 2.0 Test and Evaluation Funding

Table 5-2 provides the latest detailed Release 2 DT and OT funding projections by major test events and FY.

Table 5-2: IPPS-A Release 2.0 Test Funding Summary

IPPS-A Release 2 Test and Evaluation Funding			
T&E Resource Cost Element	**Funding Source**	**FY 18 ($K)**	**FY 19 ($K)**
Developmental Testing			
Cooperative Vulnerability Identification	PM	$120	
Cyber Table Top Exercise	PM		
Adversarial DT	PM	$536	
User Experience (Human Systems Integration)	PM	$124	
TDY and Travel	PM	$326	
Performance Test	PM	$202	
Internal PM Test Support	PM	$9,740	
DT&E Total		**$11,048**	**$0**
Operational Testing			
OT&E Evaluation	PM	$1,151	$2,551
Cooperative Vulnerability and Penetration Assessment	PM	$210	

Adversarial Assessment	PM		$278
Interoperability Assessment	PM	$200	$32
TDY and Travel	PM	$9	$50
OT&E Total		**$1,570**	**$2,911**

5.7 Deployment Risk Reduction Event (RRE)

IPPS-A PMO will conduct a Deployment RRE. The purpose of this two-phased event is to provide the ARNG a high level of confidence that the IPPS-A system can subsume SIDPERS and ETRANS and is ready for a phased deployment. It will be executed by members of the Pennsylvania Army National Guard as well as functional and technical subject matter experts from the external systems with which IPPS-A is required to be interoperable to include AFCOS, DJMS-RC, RCAS-Web and TAPDB-G.

The first phase will be a technical test conducted during the System Integration Test event and will consist of a period of dual-entry into a test instance of SIDPERS and IPPS-A. Each SIDPERS transaction will be executed in its test instance along with the corresponding transaction in IPPS-A. The methods for evaluation of this phase are outlined below:

- **Outbound Interface Validation:** Validation that the outbound data processes and procedures are adequate. IPPS-A outbound interface files will be compared with SIDPERS test instance-generated outbound interface files for accuracy. The IPPS-A outbound interface files will then be transmitted to and processed by test instances of the receiving target systems, to include AFCOS, DJMS-RC, RCAS-Web and TAPDB-G for validation of interoperability.

The second phase will be conducted during the System Acceptance Test event and will consist of execution of Operational Mission Scenarios. The methods for evaluation of this phase are outlined below:

- **Provisioning of Roles and Permissions:** Validation that the PA-ARNG can utilize the provisioning process to assign roles for initial system start and support role and permission modifications, additions and deletions at all levels necessary.
- **Workflow Input and Maintenance:** Obtain and upload pre-defined workflows provided by the PA-ARNG. Also, ensure both the policies and procedures are in place to maintain routing list and control automated workflow capability.
- **Training & Integrated Logistics Support:** Final validation that the training, self-help and helpdesk support are effective for users to execute transactions in IPPS-A.

5.8 Release 2 Developmental Evaluation Framework

The Release 2 Developmental Evaluation Framework is depicted in Table 5-3.

Table 5-3: Developmental Evaluation Framework for Release 2

Functional Evaluation Areas / Capability Areas	Key System Requirements and T&E Measures			Cross Reference	Acquisition/Program Decisions Supported					
					R2 LFD					
	Requirements Document Reference	Description	Measure		Does IPPS-A provide the necessary capability to subsume SIDPERS for all ARNG locations?	Does IPPS-A enable designated personnel, with the appropriate training, to easily perform required tasks for R2 personnel business processes?	Is IPPS-A interoperable with R2 interfacing networks and systems?	Does IPPS-A provide adequate data and resource protection in its intended operational environment and is the system secure and survivable?	Is the system reliable, available and maintainable?	Is the system audit ready?
Performance										
Personnel and Pay Support	6.1.4	Single Multi-Component Service Record	**MOP HLO 1:** Number of Soldiers accounted for by more than one Component in a Present for Duty status.	HLO 1	SDT/GAT					
	6.1.1	Streamline Data Entry Process Using Single-Input, Near Real-Time Updating Capability	**MOP HLO 2.1:** Number of data fields requiring duplicate input to populate IPPS-A personnel and pay functionality.	HLO 2	SDT/GAT					
			MOP HLO 2.2: The SME and user ratings and feedback regarding single transaction update performance.		GAT					

Functional Evaluation Areas Capability Areas	Key System Requirements and T&E Measures			Cross Reference	Acquisition/Program Decisions Supported					
					R2 LFD					
	Requirements Document Reference	Description	Measure		Does IPPS-A provide the necessary capability to subsume SIDPERS for all ARNG locations?	Does IPPS-A enable designated personnel, with the appropriate training, to easily perform required tasks for R2 personnel business processes?	Is IPPS-A interoperable with R2 interfacing networks and systems?	Does IPPS-A provide adequate data and resource protection in its intended operational environment and is the system secure and survivable?	Is the system reliable, available and maintainable?	Is the system audit ready?
	6.2.25	Support Net-Centric Military Operations	**MOP HLO 4:** Percentage of multi-Component strength information that is available for accounting and manning purposes upon updating and saving individual changes.	HLO 4	SDT/GAT					
	6.2.9	Data Retrieval	**CTP 002:** The system shall allow an authorized user to retrieve pre-defined personnel and pay data on individuals contained within the system.		SDT/GAT					
			CTP 003: The system shall allow an authorized user to retrieve pre-defined personnel and pay data on individuals contained within the system.		SDT/GAT					

Functional Evaluation Areas Capability Areas	Key System Requirements and T&E Measures			Cross Reference	Acquisition/Program Decisions Supported					
					R2 LFD					
	Requirements Document Reference	Description	Measure		Does IPPS-A provide the necessary capability to subsume SIDPERS for all ARNG locations?	Does IPPS-A enable designated personnel, with the appropriate training, to easily perform required tasks for R2 personnel business processes?	Is IPPS-A interoperable with R2 interfacing networks and systems?	Does IPPS-A provide adequate data and resource protection in its intended operational environment and is the system secure and survivable?	Is the system reliable, available and maintainable?	Is the system audit ready?
	6.2.17	Provide Soldier a Self-Service Personnel and Pay Capability	**MOP HLO 8:** Number of online individual personnel and pay updates or requests available to the Soldier.	HLO 8	SDT/GAT					
	6.2.7	Improvement of Transaction Auditability	**MOP CDI 1.2-1**: The proportion of the successful number of required transaction written to an unalterable pre-defined audit tables to the total number of required transactions.	PO 6						SDT/GAT
			MOP CDI 1.2-2: The percentage of transactions initiated within IPPS-A that are successfully traced from initiation, approval, and posting, to include supporting documentation.							SDT/GAT

Functional Evaluation Areas Capability Areas	Key System Requirements and T&E Measures			Cross Reference	Acquisition/Program Decisions Supported					
					R2 LFD					
	Requirements Document Reference	Description	Measure		Does IPPS-A provide the necessary capability to subsume SIDPERS for all ARNG locations?	Does IPPS-A enable designated personnel, with the appropriate training, to easily perform required tasks for R2 personnel business processes?	Is IPPS-A interoperable with R2 interfacing networks and systems?	Does IPPS-A provide adequate data and resource protection in its intended operational environment and is the system secure and survivable?	Is the system reliable, available and maintainable?	Is the system audit ready?
Human Systems Integration	15.7.0	Overall System Usability	**MOP CDI 3.1:** Percentage of favorable User opinion rating on System Usability Scale (SUS) on ease of use of IPPS-A applications and functions. Percentage of system design characteristics that adhere to HFE best practices guidelines and standards. ATEC SEP Usability metrics including mean number of tasks required to complete an end-to-end business process; and total number of steps required to complete a task.	HLO 8		GAT				

Functional Evaluation Areas Capability Areas	Key System Requirements and T&E Measures			Cross Reference	Acquisition/Program Decisions Supported					
					R2 LFD					
	Requirements Document Reference	Description	Measure		Does IPPS-A provide the necessary capability to subsume SIDPERS for all ARNG locations?	Does IPPS-A enable designated personnel, with the appropriate training, to easily perform required tasks for R2 personnel business processes?	Is IPPS-A interoperable with R2 interfacing networks and systems?	Does IPPS-A provide adequate data and resource protection in its intended operational environment and is the system secure and survivable?	Is the system reliable, available and maintainable?	Is the system audit ready?
	15.7.0	Effectiveness	**MOP CDI 3.2:** Proportion of users able to complete each task on the first try without assistance or error.	HLO 8		GAT				
	15.7.0	Trainability	**MOP CDI 3.3:** Proportion of user and SME positive ratings. SMEs include PeopleSoft Consultants providing input to the design and training to the program office, and observer controllers (OCs).			GAT				
	15.7.0	Trust in Technology	**MOP CDI 3.4:** Proportion of user positive ratings.			GAT				

Functional Evaluation Areas Capability Areas	Key System Requirements and T&E Measures			Cross Reference	Acquisition/Program Decisions Supported					
					R2 LFD					
	Requirements Document Reference	Description	Measure		Does IPPS-A provide the necessary capability to subsume SIDPERS for all ARNG locations?	Does IPPS-A enable designated personnel, with the appropriate training, to easily perform required tasks for R2 personnel business processes?	Is IPPS-A interoperable with R2 interfacing networks and systems?	Does IPPS-A provide adequate data and resource protection in its intended operational environment and is the system secure and survivable?	Is the system reliable, available and maintainable?	Is the system audit ready?
Integrated Logistics Support	8.0.0	Enterprise Administration	**MOP CDI 4.1:** System Administrator personnel rating and comments regarding the adequacy of software tools, system administration and user guides and administrative documentation to manage system and network configuration.	PO 7		GAT				
	6.2.21	Help Desk Support	**MOP CDI 4.2-1:** The SME and user rating and comments regarding adequacy for the helpdesk to resolve problems. SMEs include PeopleSoft Consultants providing input to the design and training to the program office, and observer controllers (OCs).			GAT				

Functional Evaluation Areas Capability Areas	Key System Requirements and T&E Measures			Cross Reference	Acquisition/Program Decisions Supported					
					R2 LFD					
	Requirements Document Reference	Description	Measure		Does IPPS-A provide the necessary capability to subsume SIDPERS for all ARNG locations?	Does IPPS-A enable designated personnel, with the appropriate training, to easily perform required tasks for R2 personnel business processes?	Is IPPS-A interoperable with R2 interfacing networks and systems?	Does IPPS-A provide adequate data and resource protection in its intended operational environment and is the system secure and survivable?	Is the system reliable, available and maintainable?	Is the system audit ready?
			MOP CDI 4.2-2: Proportion of problems submitted that were resolved by the helpdesk within 4 hours (critical priority) or 24 hours (high priority) to all critical and high priority problems submitted.			GAT				
	6.3.130	Efficiency	**MOP CDI 4.3:** Proportion of user induced errors that were corrected/resolved without use of the help desk.			GAT				
Interoperability										

Functional Evaluation Areas / Capability Areas	Key System Requirements and T&E Measures			Cross Reference	Acquisition/Program Decisions Supported					
					R2 LFD					
	Requirements Document Reference	Description	Measure		Does IPPS-A provide the necessary capability to subsume SIDPERS for all ARNG locations?	Does IPPS-A enable designated personnel, with the appropriate training, to easily perform required tasks for R2 personnel business processes?	Is IPPS-A interoperable with R2 interfacing networks and systems?	Does IPPS-A provide adequate data and resource protection in its intended operational environment and is the system secure and survivable?	Is the system reliable, available and maintainable?	Is the system audit ready?
Net-Ready	6.1.7	Enter and be managed in the network	**MOP HLO 5:** Time required for the Soldier to connect to IPPS-A initial page, once his connection has reached the IPPS-A accreditation boundary (IPPS-A Data Center).	HLO 5			SDT/GAT			
	7.1.0	Data Exchanges (Joint Systems)	**MOP HLO 6.1:** Percentage of pay-impacting data elements received and accurately processed by IPPS-A IAW the SIA.	HLO 6			SDT/GAT			
			MOP HLO 6.2: Percentage of pay impacting data elements transmitted IAW the SIA.	HLO 6			SDT/GAT			

Functional Evaluation Areas / Capability Areas	Key System Requirements and T&E Measures			Cross Reference	Acquisition/Program Decisions Supported					
					R2 LFD					
	Requirements Document Reference	Description	Measure		Does IPPS-A provide the necessary capability to subsume SIDPERS for all ARNG locations?	Does IPPS-A enable designated personnel, with the appropriate training, to easily perform required tasks for R2 personnel business processes?	Is IPPS-A interoperable with R2 interfacing networks and systems?	Does IPPS-A provide adequate data and resource protection in its intended operational environment and is the system secure and survivable?	Is the system reliable, available and maintainable?	Is the system audit ready?
	7.1.0	Data Exchanges (Non-Joint Systems)	**MOP HLO 7.1:** Percentage of pay-impacting data elements received and accurately processed by IPPS-A IAW the SIA.	HLO 7			SDT/GAT			
			MOP HLO 7.2: Percentage of pay impacting data elements transmitted IAW the SIA.	HLO 7			SDT/GAT			
	7.1.0	Data Accuracy: Non pay impacting elements	**CTP 011:** The system shall provide non pay-impacting data to an external system.	BO 4			SDT/GAT			
			CTP 012: The system shall process non pay-impacting data received from an external system.				SDT/GAT			

Functional Evaluation Areas Capability Areas	Key System Requirements and T&E Measures			Cross Reference	Acquisition/Program Decisions Supported					
					R2 LFD					
	Requirements Document Reference	Description	Measure		Does IPPS-A provide the necessary capability to subsume SIDPERS for all ARNG locations?	Does IPPS-A enable designated personnel, with the appropriate training, to easily perform required tasks for R2 personnel business processes?	Is IPPS-A interoperable with R2 interfacing networks and systems?	Does IPPS-A provide adequate data and resource protection in its intended operational environment and is the system secure and survivable?	Is the system reliable, available and maintainable?	Is the system audit ready?
			CTP 013: The system shall process system foundation data received from an external source.				SDT/GAT			
Cybersecurity										
SW & System Cybersecurity	8.0.0	RMF Compliance	**MOP CDI 2.1:** The system meets RMF requirements and IATT from the AO.	Program Protection Plan				SDT/GAT		
	8.0.0	Protect	**MOP CDI 2.2:** The implementation of the IPPS-A security controls at the Confidentiality, Integrity, and Availability (CIA) levels of Moderate, Moderate, Moderate, with an acceptable level of risk as determined by the AO and Security Control Assessor.					PLT (CVI)/SAT (CVPA)		

Functional Evaluation Areas Capability Areas	Key System Requirements and T&E Measures			Cross Reference	Acquisition/Program Decisions Supported					
					R2 LFD					
	Requirements Document Reference	Description	Measure		Does IPPS-A provide the necessary capability to subsume SIDPERS for all ARNG locations?	Does IPPS-A enable designated personnel, with the appropriate training, to easily perform required tasks for R2 personnel business processes?	Is IPPS-A interoperable with R2 interfacing networks and systems?	Does IPPS-A provide adequate data and resource protection in its intended operational environment and is the system secure and survivable?	Is the system reliable, available and maintainable?	Is the system audit ready?
	8.0.0	Detect	**CTP 006:** The system shall notify an authorized user of system security events.					DIT (Adversarial DT)		
	8.0.0	React and Restore	**MOP CDI 2.3:** IPPS-A capability to respond to detected intrusions and penetrations, exploitation of data, and/or attacks.					PLT (CTT) DIT (Adversarial DT)		
Reliability										
Reliability	6.1.5	Operational Availability	**MOP HLO 3.1:** Operational Availability (Ao).	HLO 3, Reliability Tracking Curve					DIT/GAT	
			MOP HLO 3.2: Mean Time Between System Aborts.						DIT/GAT	
			MOP HLO 3.3: Mean Time to Repair.						DIT/GAT	

Functional Evaluation Areas Capability Areas	Key System Requirements and T&E Measures			Cross Reference	Acquisition/Program Decisions Supported					
					R2 LFD					
	Requirements Document Reference	Description	Measure		Does IPPS-A provide the necessary capability to subsume SIDPERS for all ARNG locations?	Does IPPS-A enable designated personnel, with the appropriate training, to easily perform required tasks for R2 personnel business processes?	Is IPPS-A interoperable with R2 interfacing networks and systems?	Does IPPS-A provide adequate data and resource protection in its intended operational environment and is the system secure and survivable?	Is the system reliable, available and maintainable?	Is the system audit ready?
	6.3.127	Concurrent users	**CTP 005:** The system shall support access to 40,000 concurrent users. Managers/Leaders: 25% Members (Self-Service): 50% POI/HR Specialists/Admin: 25%						DIT	
	14.2.2	Training System	**CTP 008:** The Institutional training system shall have the capability to receive a training data refresh.						DIT/GAT	
			CTP 010: The Operational training system shall have the capability to receive a training data refresh.						DIT/GAT	

Functional Evaluation Areas Capability Areas	Key System Requirements and T&E Measures			Cross Reference	Acquisition/Program Decisions Supported					
					R2 LFD					
	Requirements Document Reference	Description	Measure		Does IPPS-A provide the necessary capability to subsume SIDPERS for all ARNG locations?	Does IPPS-A enable designated personnel, with the appropriate training, to easily perform required tasks for R2 personnel business processes?	Is IPPS-A interoperable with R2 interfacing networks and systems?	Does IPPS-A provide adequate data and resource protection in its intended operational environment and is the system secure and survivable?	Is the system reliable, available and maintainable?	Is the system audit ready?
			CTP 014: The Self Development/NET training system shall allow an authorized user to reset the training data set to its original state.						DIT/GAT	
			CTP 007: The Institutional training system shall allow an authorized user to reset the training data set to its original state.						DIT/GAT	
			CTP 009: The Operational training system shall allow an authorized user to reset the training data set to its original state.						DIT/GAT	

Functional Evaluation Areas Capability Areas	Key System Requirements and T&E Measures			Cross Reference	Acquisition/Program Decisions Supported					
					R2 LFD					
	Requirements Document Reference	Description	Measure		Does IPPS-A provide the necessary capability to subsume SIDPERS for all ARNG locations?	Does IPPS-A enable designated personnel, with the appropriate training, to easily perform required tasks for R2 personnel business processes?	Is IPPS-A interoperable with R2 interfacing networks and systems?	Does IPPS-A provide adequate data and resource protection in its intended operational environment and is the system secure and survivable?	Is the system reliable, available and maintainable?	Is the system audit ready?
	6.2.15.1.7.3	Continuity of Operations: Data Replication	**CTP 001:** The system shall replicate data from the primary center to a secondary data center upon the completion of the transaction.						DIT/GAT	
	6.1.5.2	Continuity of Operations: Failover/Disaster Recovery	**MOP CDI 4.4:** Time required to failover to a fully functional Secondary Data Center.						DIT	

5.9 Release 2 Mission Critical Pay Impacting Interfaces

The IPPS-A Increment II Release 2 interfaces are those interfaces that require testing and do not include interfaces tested in previous releases. Table 5-4 identifies those mission critical pay impacting interfaces for Release 2.

Table 5-4: Mission Critical Pay Impacting Interfaces for Release 2

Acronym	System Name	Description	Direction (I/O)	Organization
AFCOS	Automated Fund Control Order System	Daily **OUTBOUND** interface of ARNG orders cost estimate/commitment information and Inactive Duty Training (IDT) commitments information.	O	Army National Guard (ARNG)
ARISS	Army Recruiting Information Support System	Daily **INBOUND** interface of Army enlisted as session and Army officer and warrant officer direct appointment information to include personal, job, assignment, education, skill, and contract information. Daily **INBOUND** interface of ROTC pay and personnel information.	I	US Army Recruiting Command
DJMS RC	Defense Joint Military Pay System - Reserve Component	Daily **OUTBOUND** interface of Reserve Component Soldiers pay impacting information.	O	Defense Finance and Accounting Services (DFAS)

U.S. ARMY

Integrated Personnel and Pay System – Army (IPPS-A)

PART VI:
Annex 2 of the
IPPS-A Increment II Post-Milestone B Test and Evaluation Master Plan for Release 3

Version 1.0
12 September 2017

Department of the Army
Program Executive Office Enterprise Information Systems
Integrated Personnel and Pay System - Army Project Management Office
2521 South Clark Street
Arlington, VA 22202

6 INTRODUCTION

6.1 Purpose

The purpose of the annex is to provide Increment II Release 3 specific information and updates to the main IPPS-A Increment II TEMP document relevant to Release 3.

6.2 Scope

This Annex to the IPPS-A Increment II TEMP presents updates and other information specific to Release 3. Together, the IPPS-A Increment II TEMP and this Annex is the complete TEMP for Release 3.

6.3 Release 3 Updates

TBD.

6.4 Release 3 Capabilities

Release 3, Personnel Readiness Management and Essential Personnel Services, will provide capabilities that support accountability and essential personnel services necessary to subsume numerous legacy field systems, as shown in Table 6-1, including eMILPO and TAPDB-R. IPPS-A will establish a consolidated system that provides accountability of Soldiers and tracking of all personnel to include deployed Soldiers. It will allow Commanders in the field to access timely, accurate, and standardized personnel data for Soldiers in all components and provide a basic means to identify Soldiers who should be on the payroll. In addition to delivering most of the functions required to establish an Army-wide HR system, Release 3 will bring HR payroll drivers on board to enhance accuracy of pay, credit for service, and benefits. The IPPS-A will serve as the authoritative data source for all Soldier personnel data within the system.

Table 6-1: Legacy Systems Subsumed by IPPS-A Release 3

Acronym	Full System Name	Description
AORS	Automated Orders and Resource System	One time interface of Army Reserve Top of Stack, historic, and Future orders
ARPIMS	Army Reserve Personnel Information Middleware System	Application. Data is actually stored and retrieved from TAPDB-R
ARTRAMS	Army Reserve Transaction Management System	Application. Data is actually stored and retrieved from TAPDB-R
ASK	Assignment Satisfaction Key	Application. Stores data on TAPDB

Acronym	Full System Name	Description
DAPMIS	Department of the Army Photograph Management Information System	The Department of the Army Photograph Management Information System (DAPMIS) is the repository for the Department of the Army's official digital photographs.
EDAS	Enlisted Distribution and Assignment System	The Enlisted Distribution and Assignment System (EDAS) is a real time, interactive, automated system which supports the management of the enlisted force. The assignment managers of the HRC Enlisted Personnel Management Directorate (EPMD) process assignments, deletions, and deferments for soldiers via EDAS. The distribution managers use EDAS to create and validate requisitions, and to add or modify requisitions. EDAS also provides enlisted strength management information.
eMILPO	electronic Military Personnel Office	Conversion interface for Regular Army and Active Guard and Reserve Historical and Top of Stack Person, Job, Duty Status, Seniority Dates, Personnel Tempo (PERSTEMPO), Accomplishments, Competencies, Contract Data, Emergency Contact Information, Non-Soldier data, Labor Relations, and Career Planning data.
ICDT	Inter Component Data Transfer	Provides automated procedures to work with the Mail Box Information System to perform transfer of data between the Total Army Personnel Data Bases, and is critical to the performance of peacetime, crisis contingency, and wartime personnel management under the Total Army Concept.
ISM-INPROC/ OUTPROC RUU	Installation Support Module In/Out-Processing/Record Utility Update	Contains Arrival and Departure Checklist information. Not determined if conversion is needed.
ISM-PERSLOC	Personnel Locator	Soldier Address and Phone Information.

Acronym	Full System Name	Description
ITAPDB	Integrated Total Army Personnel Database	This conversion of Regular Army, USAR Soldier Person, Job, Assignment, Accomplishment, Competencies, Contracts not contained in eMILPO is not needed since TAPDB-R will provide this data.
MBIS	Mail Box Information System	The Mail Box Information System uses Inter-Component Data Transfer (ICDT) common software that is designed to handle the interface between MBIS and component-unique processes. MBIS is used to transfer personnel data from one Total Army Personnel Data Base component to another. In order to exchange transactions, external and internal customers exchange data using Personal Computer (PC) Blast, File Transfer Protocol (FTP), or by writing directly to a Direct Access Storage Device (DASD) file. MBIS supports Top Of the System (TOS) inter-component communications by regulating message traffic between the Army Active Enlisted, Active Officer, Reserve, and National Guard component databases, and it also includes extensions to support unique processing.
MGIB	Montgomery GI Bill	MGIB operates against the TAPDB-R database for USAR MGIB election and eligibility information
MOBPERS	Mobilization Personnel Processing System	Conversion interface of USAR Mobilization information from MOBPERS (TAPDB-R)
MOSC	Military Occupation Specialty Codes	The Military Occupation Specialty Codes (MOSC) conversion edit system supports the Department of the Army and Office of the Chief, Army Reserve conversion actions, and adds/deletes MOS codes (including MOSs, Additional Skill Identifiers, Special Qualification Identifiers, and Areas of Concentration) for Reserve personnel management as dictated by DA Notifications of Future Changes to DA PAM 611-21 that implement changes to Army Regulations. Add and delete actions are used for editing MOS code updates for personnel. The conversion actions are coded and processed by a MOSC conversion subsystem within Data Base Management that automatically generates direct conversion actions, identifies personnel whose automated records require indirect conversion, and provides a file and/or listing of all personnel affected.

Acronym	Full System Name	Description
PPW	Promotion Point Worksheet	The Promotion Point Worksheet - DA3355 (PPW) application is the automated promotion process for E4 and E5 soldiers allowing them to complete their DA Form 3355 online, and if they have sufficient point totals to then submit the data to HRC for updating the Total Army Personnel Data Base - Active Enlisted, and to DAG1 for processing by the Electronic Military Personnel Office.
RCAS-CMS	Reserve Component Automation System - Command Management System	Makes routine personnel actions easier and faster by displaying personnel data down to the unit level
RCAS-MILPO Orders	Reserve Component Automation System -	Automates the generation of personnel orders and other personnel transactions so that associated tasks can be completed quickly and easily
RCAS-UPS (Pers/Pay)	Reserve Component Automation System - Unit Personnel System (Personnel and Pay)	Makes routine personnel actions easier and faster by displaying personnel data down to the unit level
RDMS	Reserve Database Maintenance System	The principal objective of the Reserve Database Maintenance System (RDMS) design is to provide a versatile database maintenance system capable of processing real-time and batch transactions in a secure and controlled manner. Under the control of an active data dictionary, this environment provides consistent, reliable information and protection of data. It functions as the exclusive HRC-St. Louis database maintenance system for TAPDB-R.

Acronym	Full System Name	Description
RICS	RDMS Interface Control System	The Reserve Database Maintenance System (RDMS) Interface Control System (RICS) is the front end RDMS transaction processor. RICS processes incoming data from the Inter-Component Data Transfer (ICDT) system and the ARISS, to include personnel gains and losses from the Active Army, USAREC, and the ARNG, and security data from the Central Clearance Facility (CCF). Other information processed includes: verified social security number information from the Social Security Administration, information from the Army Training Requirements and Resources System (ATRRS), and Defense Language Institute (DLI) data. RICS formats RDMS transactions to be processed through ARTRAMS and applied to TAPDB-R as updates for the IRR, TPU, and other inputs.
RLAS (Pers/Pay)	Regional Level Application Software (RLAS) (Personnel/Pay)	One time interface of historic, Current and Future Mobilization/Demobilization Orders.
RSAS/RCCPDS	Reserve Strength and Accounting System/Reserve Components Common Personnel Data System	The Reserve Statistics and Accounting System (RSAS) provides the database, and the Reserve Component Common Personnel Data System (RCCPDS) provides the applications to process the official Army Reserve personnel and strength data (Selected Reserve and IRR) for input to the DOD's RCCPDS. The RSAS/RCCPDS System is the consummate embodiment of all Army Reserve (USAR) strength accounting processes in a controlled environment
RSDQ	Reserve Screening and Data Quality System	USAR Soldier transition and correspondence related information distribution system.
SAM	Soldier Assignment Module	Soldier Assignment Information (Postings/Apps to Requisition).
TAPDB-AE	Total Army Personnel Database - Active Enlisted	Conversion interface for valid open, filled, and cancelled Enlisted Requisitions
TAPDB-AO	Total Army Personnel Database - Active Officer	Database of Army Officer information
TAPDB-G	Total Army Personnel Database - ARNG	ARNG Organization and Soldier Data
TAPDB-R	Total Army Personnel Database - Reserve	Conversion interface of USAR Department Data
TOPMIS II (Partial)	Total Officer Personnel Management Information System II	Conversion interface of past, present and future Officer and Warrant Officer HR Personnel information.

Acronym	Full System Name	Description
TPUMS	Troop Program Unit Management Subsystem	TPU Management Batch Processes. Edits and loads data from RLAS into TAPDB-R. Provides data from external agencies back to RLAS.
UIC	Unit Identification Code	Loads and provides on-line maintenance for USAR Organization data that support Reserve units other than TPU units.
UPDB	USAREUR Personnel Database	Personnel applications used by the Army in the European Theater

6.5 Release 3 Test Schedule

Table 6-1 is the estimated IPPS-A Increment II Release 3 Integrated Test Program Schedule. The schedule displays the overall time sequencing of the T&E phases, events, and milestones. ATEC will provide an operational assessment within 60 days after the end of operational testing.

Figure 6-1: IPPS-A Increment II Release 3 Integrated Program Test Schedule

The Release 3 Test Schedule will be provided in subsequent updates to the TEMP.

6.6 Release 3 Test and Evaluation Funding

Table 6-2 below provides the latest detailed Release 3 DT and OT funding projections by major test events and FY.

Table 6-2: IPPS-A Release 3 Test Funding Summary

The Release 3 Test Funding Summary will be provided in subsequent updates to the TEMP.

6.7 Release 3 Developmental Evaluation Framework

The Release 3 Developmental Evaluation Framework is depicted in Table 6-3.

Table 6-3: Developmental Evaluation Framework for Release 3

Functional Evaluation Areas Capability Areas	Key System Requirements and T&E Measures			Cross Reference	Acquisition/Program Decisions Supported					
					R3 LFD					
	Requirements Document Reference	Description	Measure		Does IPPS-A provide capabilities that support accountability and essential personnel services necessary to subsume numerous legacy field systems and modules including the electronic military personnel office (eMILPO) and Total Army Database-Reserve (TAPDB-R)?	Does IPPS-A enable designated personnel, with the appropriate training, to easily perform required tasks for R3 personnel business processes?	Is IPPS-A interoperable with R3 interfacing networks and systems?	Does IPPS-A provide adequate data and resource protection in its intended operational environment and is the system secure and survivable?	Is the system reliable, available and maintainable?	Is the system audit ready?
Performance										
Personnel and Pay Support	6.1.4	Single Multi-Component Service Record	**MOP HLO 1:** Number of Soldiers accounted for by more than one Component in a Present for Duty status.	HLO 1	SDT/GAT					
	6.1.1	Streamline Data Entry Process Using Single-Input, Near Real-Time Updating Capability	**MOP HLO 2.1:** Number of data fields requiring duplicate input to populate IPPS-A personnel and pay functionality.	HLO 2	SDT/GAT					
			MOP HLO 2.2: The SME and user ratings and feedback regarding single transaction update performance.		GAT					

Functional Evaluation Areas Capability Areas	Key System Requirements and T&E Measures			Cross Reference	Acquisition/Program Decisions Supported					
					R3 LFD					
	Requirements Document Reference	Description	Measure		Does IPPS-A provide capabilities that support accountability and essential personnel services necessary to subsume numerous legacy field systems and modules including the electronic military personnel office (eMILPO) and Total Army Database-Reserve (TAPDB-R)?	Does IPPS-A enable designated personnel, with the appropriate training, to easily perform required tasks for R3 personnel business processes?	Is IPPS-A interoperable with R3 interfacing networks and systems?	Does IPPS-A provide adequate data and resource protection in its intended operational environment and is the system secure and survivable?	Is the system reliable, available and maintainable?	Is the system audit ready?
	6.2.25	Support Net-Centric Military Operations	**MOP HLO 4:** Percentage of multi-Component strength information that is available for accounting and manning purposes upon updating and saving individual changes.	HLO 4	SDT/GAT					
	6.2.9	Data Retrieval	**CTP 002:** The system shall allow an authorized user to retrieve pre-defined personnel and pay data on individuals contained within the system.		SDT/GAT					
			CTP 003: The system shall allow an authorized user to retrieve pre-defined personnel and pay data on individuals contained within the system.		SDT/GAT					

Functional Evaluation Areas / Capability Areas	Key System Requirements and T&E Measures			Cross Reference	Acquisition/Program Decisions Supported					
					R3 LFD					
	Requirements Document Reference	Description	Measure		Does IPPS-A provide capabilities that support accountability and essential personnel services necessary to subsume numerous legacy field systems and modules including the electronic military personnel office (eMILPO) and Total Army Database-Reserve (TAPDB-R)?	Does IPPS-A enable designated personnel, with the appropriate training, to easily perform required tasks for R3 personnel business processes?	Is IPPS-A interoperable with R3 interfacing networks and systems?	Does IPPS-A provide adequate data and resource protection in its intended operational environment and is the system secure and survivable?	Is the system reliable, available and maintainable?	Is the system audit ready?
	6.2.17	Provide Soldier a Self-Service Personnel and Pay Capability	**MOP HLO 8:** Number of online individual personnel and pay updates or requests available to the Soldier.	HLO 8	SDT/GAT					
	6.2.7	Improvement of Transaction Auditability	**MOP CDI 1.2-1**: The proportion of the successful number of required transaction written to an unalterable pre-defined audit tables to the total number of required transactions.	PO 6						SDT/GAT
			MOP CDI 1.2-2: The percentage of transactions initiated within IPPS-A that are successfully traced from initiation, approval, and posting, to include supporting documentation.							SDT/GAT

Functional Evaluation Areas / Capability Areas	Key System Requirements and T&E Measures			Cross Reference	Acquisition/Program Decisions Supported					
					R3 LFD					
	Requirements Document Reference	Description	Measure		Does IPPS-A provide capabilities that support accountability and essential personnel services necessary to subsume numerous legacy field systems and modules including the electronic military personnel office (eMILPO) and Total Army Database-Reserve (TAPDB-R)?	Does IPPS-A enable designated personnel, with the appropriate training, to easily perform required tasks for R3 personnel business processes?	Is IPPS-A interoperable with R3 interfacing networks and systems?	Does IPPS-A provide adequate data and resource protection in its intended operational environment and is the system secure and survivable?	Is the system reliable, available and maintainable?	Is the system audit ready?
Human Systems Integration	15.7.0	Overall System Usability	**MOP CDI 3.1:** Percentage of favorable User opinion rating on System Usability Scale (SUS) on ease of use of IPPS-A applications and functions. Percentage of system design characteristics that adhere to HFE best practices guidelines and standards. ATEC SEP Usability metrics including mean number of tasks required to complete an end-to-end business process; and total number of steps required to complete a task.	HLO 8		GAT				

Functional Evaluation Areas / Capability Areas	Key System Requirements and T&E Measures			Cross Reference	Acquisition/Program Decisions Supported					
					R3 LFD					
	Requirements Document Reference	Description	Measure		Does IPPS-A provide capabilities that support accountability and essential personnel services necessary to subsume numerous legacy field systems and modules including the electronic military personnel office (eMILPO) and Total Army Database-Reserve (TAPDB-R)?	Does IPPS-A enable designated personnel, with the appropriate training, to easily perform required tasks for R3 personnel business processes?	Is IPPS-A interoperable with R3 interfacing networks and systems?	Does IPPS-A provide adequate data and resource protection in its intended operational environment and is the system secure and survivable?	Is the system reliable, available and maintainable?	Is the system audit ready?
	15.7.0	Effectiveness	**MOP CDI 3.2:** Proportion of users able to complete each task on the first try without assistance or error.	HLO 8		GAT				
	15.7.0	Trainability	**MOP CDI 3.3:** Proportion of user and SME positive ratings. SMEs include PeopleSoft Consultants providing input to the design and training to the program office, and observer controllers (OCs).			GAT				
	15.7.0	Trust in Technology	**MOP CDI 3.4:** Proportion of user positive ratings.			GAT				

Functional Evaluation Areas / Capability Areas	Key System Requirements and T&E Measures			Cross Reference	Acquisition/Program Decisions Supported					
					R3 LFD					
	Requirements Document Reference	Description	Measure		Does IPPS-A provide capabilities that support accountability and essential personnel services necessary to subsume numerous legacy field systems and modules including the electronic military personnel office (eMILPO) and Total Army Database-Reserve (TAPDB-R)?	Does IPPS-A enable designated personnel, with the appropriate training, to easily perform required tasks for R3 personnel business processes?	Is IPPS-A interoperable with R3 interfacing networks and systems?	Does IPPS-A provide adequate data and resource protection in its intended operational environment and is the system secure and survivable?	Is the system reliable, available and maintainable?	Is the system audit ready?
Integrated Logistics Support	8.0.0	Enterprise Administration	**MOP CDI 4.1:** System Administrator personnel rating and comments regarding the adequacy of software tools, system administration and user guides and administrative documentation to manage system and network configuration.	PO 7		GAT				
	6.2.21	Help Desk Support	**MOP CDI 4.2-1:** The SME and user rating and comments regarding adequacy for the helpdesk to resolve problems. SMEs include PeopleSoft Consultants providing input to the design and training to the program office, and observer controllers (OCs).			GAT				

Functional Evaluation Areas Capability Areas	Key System Requirements and T&E Measures			Cross Reference	Acquisition/Program Decisions Supported					
					R3 LFD					
	Requirements Document Reference	Description	Measure		Does IPPS-A provide capabilities that support accountability and essential personnel services necessary to subsume numerous legacy field systems and modules including the electronic military personnel office (eMILPO) and Total Army Database-Reserve (TAPDB-R)?	Does IPPS-A enable designated personnel, with the appropriate training, to easily perform required tasks for R3 personnel business processes?	Is IPPS-A interoperable with R3 interfacing networks and systems?	Does IPPS-A provide adequate data and resource protection in its intended operational environment and is the system secure and survivable?	Is the system reliable, available and maintainable?	Is the system audit ready?
			MOP CDI 4.2-2: Proportion of problems submitted that were resolved by the helpdesk within 4 hours (critical priority) or 24 hours (high priority) to all critical and high priority problems submitted.			GAT				
	6.3.130	Efficiency	**MOP CDI 4.3:** Proportion of user induced errors that were corrected/resolved without use of the help desk.			GAT				
Interoperability										

Functional Evaluation Areas / Capability Areas	Key System Requirements and T&E Measures			Cross Reference	Acquisition/Program Decisions Supported					
					R3 LFD					
	Requirements Document Reference	Description	Measure		Does IPPS-A provide capabilities that support accountability and essential personnel services necessary to subsume numerous legacy field systems and modules including the electronic military personnel office (eMILPO) and Total Army Database-Reserve (TAPDB-R)?	Does IPPS-A enable designated personnel, with the appropriate training, to easily perform required tasks for R3 personnel business processes?	Is IPPS-A interoperable with R3 interfacing networks and systems?	Does IPPS-A provide adequate data and resource protection in its intended operational environment and is the system secure and survivable?	Is the system reliable, available and maintainable?	Is the system audit ready?
Net-Ready	6.1.7	Enter and be managed in the network	**MOP HLO 5:** Time required for the Soldier to connect to IPPS-A initial page, once his connection has reached the IPPS-A accreditation boundary (IPPS-A Data Center).	HLO 5			SDT/GAT			
	7.1.0	Data Exchanges (Joint Systems)	**MOP HLO 6.1:** Percentage of pay-impacting data elements received and accurately processed by IPPS-A IAW the SIA.	HLO 6			SDT/GAT			
			MOP HLO 6.2: Percentage of pay impacting data elements transmitted IAW the SIA.	HLO 6			SDT/GAT			

Functional Evaluation Areas / Capability Areas	Key System Requirements and T&E Measures			Cross Reference	Acquisition/Program Decisions Supported					
					R3 LFD					
	Requirements Document Reference	Description	Measure		Does IPPS-A provide capabilities that support accountability and essential personnel services necessary to subsume numerous legacy field systems and modules including the electronic military personnel office (eMILPO) and Total Army Database-Reserve (TAPDB-R)?	Does IPPS-A enable designated personnel, with the appropriate training, to easily perform required tasks for R3 personnel business processes?	Is IPPS-A interoperable with R3 interfacing networks and systems?	Does IPPS-A provide adequate data and resource protection in its intended operational environment and is the system secure and survivable?	Is the system reliable, available and maintainable?	Is the system audit ready?
	7.1.0	Data Exchanges (Non-Joint Systems)	**MOP HLO 7.1:** Percentage of pay-impacting data elements received and accurately processed by IPPS-A IAW the SIA.	HLO 7			SDT/GAT			
			MOP HLO 7.2: Percentage of pay impacting data elements transmitted IAW the SIA.	HLO 7			SDT/GAT			
	7.1.0	Data Accuracy: Non pay impacting elements	**CTP 011:** The system shall provide non pay-impacting data to an external system.	BO 4			SDT/GAT			
			CTP 012: The system shall process non pay-impacting data received from an external system.				SDT/GAT			

Functional Evaluation Areas / Capability Areas	Key System Requirements and T&E Measures			Cross Reference	Acquisition/Program Decisions Supported					
					R3 LFD					
	Requirements Document Reference	Description	Measure		Does IPPS-A provide capabilities that support accountability and essential personnel services necessary to subsume numerous legacy field systems and modules including the electronic military personnel office (eMILPO) and Total Army Database-Reserve (TAPDB-R)?	Does IPPS-A enable designated personnel, with the appropriate training, to easily perform required tasks for R3 personnel business processes?	Is IPPS-A interoperable with R3 interfacing networks and systems?	Does IPPS-A provide adequate data and resource protection in its intended operational environment and is the system secure and survivable?	Is the system reliable, available and maintainable?	Is the system audit ready?
			CTP 013: The system shall process system foundation data received from an external source.				SDT/GAT			
Cybersecurity										
SW & System Cybersecurity	8.0.0	RMF Compliance	**MOP CDI 2.1:** The system meets RMF requirements and IATT from the AO.	Program Protection Plan				SDT/GAT		
	8.0.0	Protect	**MOP CDI 2.2:** The implementation of the IPPS-A security controls at the Confidentiality, Integrity, and Availability (CIA) levels of Moderate, Moderate, Moderate, with an acceptable level of risk as determined by the AO and Security Control Assessor.					PLT (CVI)/SAT (CVPA)		

Functional Evaluation Areas / Capability Areas	Key System Requirements and T&E Measures			Cross Reference	Acquisition/Program Decisions Supported					
					R3 LFD					
	Requirements Document Reference	Description	Measure		Does IPPS-A provide capabilities that support accountability and essential personnel services necessary to subsume numerous legacy field systems and modules including the electronic military personnel office (eMILPO) and Total Army Database-Reserve (TAPDB-R)?	Does IPPS-A enable designated personnel, with the appropriate training, to easily perform required tasks for R3 personnel business processes?	Is IPPS-A interoperable with R3 interfacing networks and systems?	Does IPPS-A provide adequate data and resource protection in its intended operational environment and is the system secure and survivable?	Is the system reliable, available and maintainable?	Is the system audit ready?
	8.0.0	Detect	**CTP 006:** The system shall notify an authorized user of system security events.					DIT (Adversarial DT)		
	8.0.0	React and Restore	**MOP CDI 2.3:** IPPS-A capability to respond to detected intrusions and penetrations, exploitation of data, and/or attacks.					PLT (CTT) DIT (Adversarial DT)		
Reliability										
Reliability	6.1.5	Operational Availability	**MOP HLO 3.1:** Operational Availability (Ao).	HLO 3, Reliability Tracking Curve					DIT/GAT	
			MOP HLO 3.2: Mean Time Between System Aborts.						DIT/GAT	
			MOP HLO 3.3: Mean Time to Repair.						DIT/GAT	

Functional Evaluation Areas / Capability Areas	Key System Requirements and T&E Measures			Cross Reference	Acquisition/Program Decisions Supported					
					R3 LFD					
	Requirements Document Reference	Description	Measure		Does IPPS-A provide capabilities that support accountability and essential personnel services necessary to subsume numerous legacy field systems and modules including the electronic military personnel office (eMILPO) and Total Army Database-Reserve (TAPDB-R)?	Does IPPS-A enable designated personnel, with the appropriate training, to easily perform required tasks for R3 personnel business processes?	Is IPPS-A interoperable with R3 interfacing networks and systems?	Does IPPS-A provide adequate data and resource protection in its intended operational environment and is the system secure and survivable?	Is the system reliable, available and maintainable?	Is the system audit ready?
	6.3.127	Concurrent users	**CTP 005:** The system shall support access to 40,000 concurrent users. Managers/Leaders: 25% Members (Self-Service): 50% POI/HR Specialists/Admin: 25%						DIT	
	14.2.2	Training System	**CTP 008:** The Institutional training system shall have the capability to receive a training data refresh.						DIT/GAT	
			CTP 010: The Operational training system shall have the capability to receive a training data refresh.						DIT/GAT	

Functional Evaluation Areas Capability Areas	Key System Requirements and T&E Measures			Cross Reference	Acquisition/Program Decisions Supported					
					R3 LFD					
	Requirements Document Reference	Description	Measure		Does IPPS-A provide capabilities that support accountability and essential personnel services necessary to subsume numerous legacy field systems and modules including the electronic military personnel office (eMILPO) and Total Army Database-Reserve (TAPDB-R)?	Does IPPS-A enable designated personnel, with the appropriate training, to easily perform required tasks for R3 personnel business processes?	Is IPPS-A interoperable with R3 interfacing networks and systems?	Does IPPS-A provide adequate data and resource protection in its intended operational environment and is the system secure and survivable?	Is the system reliable, available and maintainable?	Is the system audit ready?
			CTP 014: The Self Development/NET training system shall allow an authorized user to reset the training data set to its original state.						DIT/GAT	
			CTP 007: The Institutional training system shall allow an authorized user to reset the training data set to its original state.						DIT/GAT	
			CTP 009: The Operational training system shall allow an authorized user to reset the training data set to its original state.						DIT/GAT	

Functional Evaluation Areas Capability Areas	Key System Requirements and T&E Measures			Cross Reference	Acquisition/Program Decisions Supported					
					R3 LFD					
	Requirements Document Reference	Description	Measure		Does IPPS-A provide capabilities that support accountability and essential personnel services necessary to subsume numerous legacy field systems and modules including the electronic military personnel office (eMILPO) and Total Army Database-Reserve (TAPDB-R)?	Does IPPS-A enable designated personnel, with the appropriate training, to easily perform required tasks for R3 personnel business processes?	Is IPPS-A interoperable with R3 interfacing networks and systems?	Does IPPS-A provide adequate data and resource protection in its intended operational environment and is the system secure and survivable?	Is the system reliable, available and maintainable?	Is the system audit ready?
	6.2.15.1.7.3	Continuity of Operations: Data Replication	**CTP 001:** The system shall replicate data from the primary center to a secondary data center upon the completion of the transaction.						DIT/GAT	
	6.1.5.2	Continuity of Operations: Failover/Disaster Recovery	**MOP CDI 4.4:** Time required to failover to a fully functional Secondary Data Center.						DIT	

6.8 Release 3 Mission Critical Pay Impacting Interfaces

The IPPS-A Increment II Release 3 interfaces are those interfaces that require testing and do not include interfaces tested in previous releases.

Table 6-4 identifies those mission critical pay impacting interfaces for Release 3.

Table 6-4: Mission Critical Pay Impacting Interfaces for Release 3*

Acronym	System Name	Description	Direction (I/O)	Organization
DJMS AC	Defense Joint Military Pay System - Active Component	Daily **OUTBOUND** interface of Active Component Soldiers pay impacting information.	O	Defense Finance and Accounting Services (DFAS)
DTS	Defense Travel System	Travel cost for obligations and expenditures, travel debts, DTS Site information, and other travel information related to orders. Travel order and commitment data.	I/O	Defense Travel Management Office (DTMO)
GFEBS	General Fund Enterprise Business System	**INBOUND** interface acknowledging receipt of obligation and accounting information for pay roll, off-cycle payments, accounts receivable and orders. **OUTBOUND** interface of obligation and accounting information for payrolls, off-cycle payments, accounts receivable and orders.	I/O	ASA (FM&C)
USMA AMS	US Military Academy Management System	**INBOUND** interface to electronically establish the U.S. Military Cadet's personnel and pay record in IPPS-A.	I	USMA

*The Mission Critical Pay Impacting Interfaces for Release 3 will be confirmed at the Release 3 Critical Design Review by the PMO and FMD.

U.S. ARMY

Integrated Personnel and Pay System – Army (IPPS-A)

PART VII:
Annex 3 to the
IPPS-A Increment II Post-Milestone B Test and Evaluation Master Plan for Release 4

Version 1.0

12 September 2017

Department of the Army
Program Executive Office Enterprise Information Systems
Integrated Personnel and Pay System - Army Project Management Office
2521 South Clark Street
Arlington, VA 22202

7 INTRODUCTION

7.1 Purpose

The purpose of the annex is to provide Increment II Release 4 specific information and updates to the main IPPS-A Increment II TEMP document relevant to Release 4.

7.2 Scope

This Annex to the IPPS-A Increment II TEMP presents updates and other information specific to Release 4. Together, the IPPS-A Increment II TEMP and this Annex is the complete TEMP for Release 4.

7.3 Release 4 Updates.

TBD.

7.4 Release 4 Capabilities

Release 4, Pay Services, will focus on pay services building upon Releases 2 and 3 to provide a fully integrated personnel and pay system. IPPS-A will incorporate pay functionality to include, but not limited to, base pay, taxes, allowances, bonuses, allotments and leave. Table 7-1 lists the legacy field systems that will be subsumed by Release 4. At deployment, Release 4 will serve as the authoritative data source for all personnel and pay transactions within IPPS-A and will be able to produce initial data in support of the Army's audit readiness goals.

Table 7-1: Legacy Systems Subsumed by IPPS-A Release 4

Acronym	Full System Name	Description
5 Year Tax History		
CMS	Case Management System	The Case Management System is used by DJMS to capture and track top-of-the-system cases forwarded by finance field offices requiring specialized expertise or handling.
DJMS AC	Defense Joint Military Pay System - Active Component	The Defense Joint Military Pay System - Active Component (DJMS-AC) provides pay computation, leave, and financial accounting for Military Service members serving in the Army, Navy, and Air Force active duty and Junior Reserve Officer Training Corps (JROTC); providing payroll support to approximately 1.4 million Service members worldwide. Also included in the funding for DJMS-AC is support for the Saving Deposit Program. SDP is used to compute the interest earned on savings deposits (cash/allotments) made by members of the Armed Forces serving in a combat zone, e.g., serving under arduous conditions or in support of a contingency operation.

Acronym	Full System Name	Description
DJMS RC	Defense Joint Military Pay System - Reserve Component	The Defense Joint Military Pay System - Reserve Component (DJMS-RC) is a legacy payroll system that provides pay computation, leave and financial accounting for the reserve military members in the US Army, Navy and Air Force. Additionally, it supports pay for annual training and short periods of active duty. Army has expanded the scope to include all Guard/Reserve brought onto active Duty regardless of the length of time on active duty. DJMS-RC also supports the Reserve Officers Training Program and the Health Professional Scholarship Program. The Defense Joint Military Pay System - Reserve Component (DJMS-RC) is a legacy payroll system that provides pay computation, leave and financial accounting for the reserve military members in the US Army, Navy and Air Force. Additionally, it supports pay for annual training and short periods of active duty. Army has expanded the scope to include all Guard/Reserve brought onto active Duty regardless of the length of time on active duty. DJMS-RC also supports the Reserve Officers Training Program and the Health Professional Scholarship Program.
DMO	Defense MilPay Office	The Defense MilPay Office is the field input system to DJMS.
ISM-TRANSPROC III	Installation Support Modules - Military Personnel Transition Point Processing	Soldier transition processing information
JUSTIS	Joint Uniform Military Pay System (JUMPS) Standard Terminal Input Subsystem	Input subsystem for JUMPS (DJMS-RC??). Not determined if conversion is needed.
MUP	My Unit Pay	MyUnitPay is a web-based system utilizing an Oracle database developed for the National Guard by the National Guard. MyUnitPay provides the ARNG with the ability to pay soldiers at the unit level for IDT pay, split training, AFTPs, RMP\ATA, SDAP, FLPP, Funeral Honors, and short tour Active duty pay certification. MyUnitPay was developed as a replacement for the IDT portion of the AFCOS RFO/IDT system migrating the legacy system to the World Wide Web environment utilizing current development standards.
RCAS-RPAM	Reserve Component Automation System - Retirement Points Accounting Management	Accounts for and reports on retirement points for Soldiers assigned to the ARNG

Acronym	Full System Name	Description
RLAS (pay)	Regional Level Application Software (Personnel and Pay)	The Regional Level Application Software (Personnel/Pay) RLAS system is a USAR-developed, Web-based application designed to assist the USAR unit commander in accomplishing day-to-day administrative tasks. RLAS provides the same data to all echelons of command throughout the USAR.
RPAS	Retirement Points Accounting System	Conversion interface for USAR Top of Stack and historical retirement point summary and detail

7.5 Release 4 Test Schedule

Figure 7-1 is the estimated IPPS-A Increment II Release 4 Integrated Test Program Schedule. The schedule displays the overall time sequencing of the T&E phases, events, and milestones. ATEC will provide an operational assessment within 60 days after the end of operational testing.

Figure 7-1: IPPS-A Increment II Release 4 Integrated Program Test Schedule

The Release 4 Test Schedule will be provided in subsequent updates to the TEMP.

7.6 Release 4 Test and Evaluation Funding

Table 7-2 below provides the latest detailed Release 4 DT and OT funding projections by major test events and FY.

Table 7-2: IPPS-A Release 4 Test Funding Summary

The Release 4 Test Funding Summary will be provided in subsequent updates to the TEMP.

7.7 Release 4 Developmental Evaluation Framework

The Release 4 Developmental Evaluation Framework is depicted in Table 7-3.

Table 7-3: Developmental Evaluation Framework for Release 4

Functional Evaluation Areas Capability Areas	Key System Requirements and T&E Measures			Cross Reference	Acquisition/Program Decisions Supported					
					R4 FDD					
	Requirements Document Reference	Description	Measure		Does IPPS-A provide the pay services building upon Releases 2.0 and 3.0 to provide the basis for the fully integrated personnel and pay system?	Does IPPS-A enable designated personnel, with the appropriate training, to easily perform required tasks for R4 personnel and pay business processes?	Is IPPS-A interoperable with R4 interfacing networks and systems?	Does IPPS-A provide adequate data and resource protection in its intended operational environment and is the system secure and survivable?	Is the system reliable, available and maintainable?	Is the system audit ready?
Performance										
Personnel and Pay Support	6.1.4	Single Multi-Component Service Record	**MOP HLO 1:** Number of Soldiers accounted for by more than one Component in a Present for Duty status.	HLO 1	SDT/GAT					
	6.1.1	Streamline Data Entry Process Using Single-Input, Near Real-Time Updating Capability	**MOP HLO 2.1:** Number of data fields requiring duplicate input to populate IPPS-A personnel and pay functionality.	HLO 2	SDT/GAT					
			MOP HLO 2.2: The SME and user ratings and feedback regarding single transaction update performance.		GAT					

Functional Evaluation Areas Capability Areas	Key System Requirements and T&E Measures			Cross Reference	Acquisition/Program Decisions Supported					
					R4 FDD					
	Requirements Document Reference	Description	Measure		Does IPPS-A provide the pay services building upon Releases 2.0 and 3.0 to provide the basis for the fully integrated personnel and pay system?	Does IPPS-A enable designated personnel, with the appropriate training, to easily perform required tasks for R4 personnel and pay business processes?	Is IPPS-A interoperable with R4 interfacing networks and systems?	Does IPPS-A provide adequate data and resource protection in its intended operational environment and is the system secure and survivable?	Is the system reliable, available and maintainable?	Is the system audit ready?
	6.3.111	Pay Computation	**MOP CDI 1.1:** Proportion of accurately computed payroll calculation to the total number of payroll calculations attempted (including entitlements, deductions and benefits).	PO 2	SDT/GAT					
			CTP 004: The system shall process payroll and generate a pay disbursement file.		SDT/GAT					
	6.2.25	Support Net-Centric Military Operations	**MOP HLO 4:** Percentage of multi-Component strength information that is available for accounting and manning purposes upon updating and saving individual changes.	HLO 4	SDT/GAT					

Functional Evaluation Areas Capability Areas	Key System Requirements and T&E Measures			Cross Reference	Acquisition/Program Decisions Supported					
					R4 FDD					
	Requirements Document Reference	Description	Measure		Does IPPS-A provide the pay services building upon Releases 2.0 and 3.0 to provide the basis for the fully integrated personnel and pay system?	Does IPPS-A enable designated personnel, with the appropriate training, to easily perform required tasks for R4 personnel and pay business processes?	Is IPPS-A interoperable with R4 interfacing networks and systems?	Does IPPS-A provide adequate data and resource protection in its intended operational environment and is the system secure and survivable?	Is the system reliable, available and maintainable?	Is the system audit ready?
	6.2.9	Data Retrieval	**CTP 002:** The system shall allow an authorized user to retrieve pre-defined personnel and pay data on individuals contained within the system.		SDT/GAT					
			CTP 003: The system shall allow an authorized user to retrieve pre-defined personnel and pay data on individuals contained within the system.		SDT/GAT					
	6.2.17	Provide Soldier a Self-Service Personnel and Pay Capability	**MOP HLO 8:** Number of online individual personnel and pay updates or requests available to the Soldier.	HLO 8	SDT/GAT					

Functional Evaluation Areas Capability Areas	Key System Requirements and T&E Measures			Cross Reference	Acquisition/Program Decisions Supported					
					R4 FDD					
	Requirements Document Reference	Description	Measure		Does IPPS-A provide the pay services building upon Releases 2.0 and 3.0 to provide the basis for the fully integrated personnel and pay system?	Does IPPS-A enable designated personnel, with the appropriate training, to easily perform required tasks for R4 personnel and pay business processes?	Is IPPS-A interoperable with R4 interfacing networks and systems?	Does IPPS-A provide adequate data and resource protection in its intended operational environment and is the system secure and survivable?	Is the system reliable, available and maintainable?	Is the system audit ready?
	6.2.7	Improvement of Transaction Auditability	**MOP CDI 1.2-1**: The proportion of the successful number of required transaction written to an unalterable pre-defined audit tables to the total number of required transactions.	PO 6	SDT/GAT					SDT/GAT
			MOP CDI 1.2-2: The percentage of transactions initiated within IPPS-A that are successfully traced from initiation, approval, and posting, to include supporting documentation.		SDT/GAT					SDT/GAT

Functional Evaluation Areas Capability Areas	Key System Requirements and T&E Measures			Cross Reference	Acquisition/Program Decisions Supported					
					R4 FDD					
	Requirements Document Reference	Description	Measure		Does IPPS-A provide the pay services building upon Releases 2.0 and 3.0 to provide the basis for the fully integrated personnel and pay system?	Does IPPS-A enable designated personnel, with the appropriate training, to easily perform required tasks for R4 personnel and pay business processes?	Is IPPS-A interoperable with R4 interfacing networks and systems?	Does IPPS-A provide adequate data and resource protection in its intended operational environment and is the system secure and survivable?	Is the system reliable, available and maintainable?	Is the system audit ready?
Human Systems Integration	15.7.0	Overall System Usability	**MOP CDI 3.1:** Percentage of favorable User opinion rating on System Usability Scale (SUS) on ease of use of IPPS-A applications and functions. Percentage of system design characteristics that adhere to HFE best practices guidelines and standards. ATEC SEP Usability metrics including mean number of tasks required to complete an end-to-end business process; and total number of steps required to complete a task.	HLO 8		GAT				

Functional Evaluation Areas Capability Areas	Key System Requirements and T&E Measures			Cross Reference	Acquisition/Program Decisions Supported					
					R4 FDD					
	Requirements Document Reference	Description	Measure		Does IPPS-A provide the pay services building upon Releases 2.0 and 3.0 to provide the basis for the fully integrated personnel and pay system?	Does IPPS-A enable designated personnel, with the appropriate training, to easily perform required tasks for R4 personnel and pay business processes?	Is IPPS-A interoperable with R4 interfacing networks and systems?	Does IPPS-A provide adequate data and resource protection in its intended operational environment and is the system secure and survivable?	Is the system reliable, available and maintainable?	Is the system audit ready?
	15.7.0	Effectiveness	**MOP CDI 3.2:** Proportion of users able to complete each task on the first try without assistance or error.	HLO 8		GAT				
	15.7.0	Trainability	**MOP CDI 3.3:** Proportion of user and SME positive ratings. SMEs include PeopleSoft Consultants providing input to the design and training to the program office, and observer controllers (OCs).			GAT				
	15.7.0	Trust in Technology	**MOP CDI 3.4:** Proportion of user positive ratings.			GAT				

Functional Evaluation Areas Capability Areas	Key System Requirements and T&E Measures			Cross Reference	Acquisition/Program Decisions Supported					
					R4 FDD					
	Requirements Document Reference	Description	Measure		Does IPPS-A provide the pay services building upon Releases 2.0 and 3.0 to provide the basis for the fully integrated personnel and pay system?	Does IPPS-A enable designated personnel, with the appropriate training, to easily perform required tasks for R4 personnel and pay business processes?	Is IPPS-A interoperable with R4 interfacing networks and systems?	Does IPPS-A provide adequate data and resource protection in its intended operational environment and is the system secure and survivable?	Is the system reliable, available and maintainable?	Is the system audit ready?
Integrated Logistics Support	8.0.0	Enterprise Administration	**MOP CDI 4.1:** System Administrator personnel rating and comments regarding the adequacy of software tools, system administration and user guides and administrative documentation to manage system and network configuration.	PO 7		GAT				
	6.2.21	Help Desk Support	**MOP CDI 4.2-1:** The SME and user rating and comments regarding adequacy for the helpdesk to resolve problems. SMEs include PeopleSoft Consultants providing input to the design and training to the program office, and observer controllers (OCs).			GAT				

Functional Evaluation Areas Capability Areas	Key System Requirements and T&E Measures			Cross Reference	Acquisition/Program Decisions Supported					
					R4 FDD					
	Requirements Document Reference	Description	Measure		Does IPPS-A provide the pay services building upon Releases 2.0 and 3.0 to provide the basis for the fully integrated personnel and pay system?	Does IPPS-A enable designated personnel, with the appropriate training, to easily perform required tasks for R4 personnel and pay business processes?	Is IPPS-A interoperable with R4 interfacing networks and systems?	Does IPPS-A provide adequate data and resource protection in its intended operational environment and is the system secure and survivable?	Is the system reliable, available and maintainable?	Is the system audit ready?
			MOP CDI 4.2-2: Proportion of problems submitted that were resolved by the helpdesk within 4 hours (critical priority) or 24 hours (high priority) to all critical and high priority problems submitted.			GAT				
	6.3.130	Efficiency	**MOP CDI 4.3:** Proportion of user induced errors that were corrected/resolved without use of the help desk.			GAT				
Interoperability										

Functional Evaluation Areas Capability Areas	Key System Requirements and T&E Measures			Cross Reference	Acquisition/Program Decisions Supported					
					R4 FDD					
	Requirements Document Reference	Description	Measure		Does IPPS-A provide the pay services building upon Releases 2.0 and 3.0 to provide the basis for the fully integrated personnel and pay system?	Does IPPS-A enable designated personnel, with the appropriate training, to easily perform required tasks for R4 personnel and pay business processes?	Is IPPS-A interoperable with R4 interfacing networks and systems?	Does IPPS-A provide adequate data and resource protection in its intended operational environment and is the system secure and survivable?	Is the system reliable, available and maintainable?	Is the system audit ready?
Net-Ready	6.1.7	Enter and be managed in the network	**MOP HLO 5:** Time required for the Soldier to connect to IPPS-A initial page, once his connection has reached the IPPS-A accreditation boundary (IPPS-A Data Center).	HLO 5			SDT/GAT			
	7.1.0	Data Exchanges (Joint Systems)	**MOP HLO 6.1:** Percentage of pay-impacting data elements received and accurately processed by IPPS-A IAW the SIA.	HLO 6			SDT/GAT			
			MOP HLO 6.2: Percentage of pay impacting data elements transmitted IAW the SIA.	HLO 6			SDT/GAT			

Functional Evaluation Areas Capability Areas	Key System Requirements and T&E Measures			Cross Reference	Acquisition/Program Decisions Supported					
					R4 FDD					
	Requirements Document Reference	Description	Measure		Does IPPS-A provide the pay services building upon Releases 2.0 and 3.0 to provide the basis for the fully integrated personnel and pay system?	Does IPPS-A enable designated personnel, with the appropriate training, to easily perform required tasks for R4 personnel and pay business processes?	Is IPPS-A interoperable with R4 interfacing networks and systems?	Does IPPS-A provide adequate data and resource protection in its intended operational environment and is the system secure and survivable?	Is the system reliable, available and maintainable?	Is the system audit ready?
	7.1.0	Data Exchanges (Non-Joint Systems)	**MOP HLO 7.1:** Percentage of pay-impacting data elements received and accurately processed by IPPS-A IAW the SIA.	HLO 7			SDT/GAT			
			MOP HLO 7.2: Percentage of pay impacting data elements transmitted IAW the SIA.	HLO 7			SDT/GAT			
	7.1.0	Data Accuracy: Non pay impacting elements	**CTP 011:** The system shall provide non pay-impacting data to an external system.	BO 4			SDT/GAT			
			CTP 012: The system shall process non pay-impacting data received from an external system.				SDT/GAT			

Functional Evaluation Areas Capability Areas	Key System Requirements and T&E Measures			Cross Reference	Acquisition/Program Decisions Supported					
					R4 FDD					
	Requirements Document Reference	Description	Measure		Does IPPS-A provide the pay services building upon Releases 2.0 and 3.0 to provide the basis for the fully integrated personnel and pay system?	Does IPPS-A enable designated personnel, with the appropriate training, to easily perform required tasks for R4 personnel and pay business processes?	Is IPPS-A interoperable with R4 interfacing networks and systems?	Does IPPS-A provide adequate data and resource protection in its intended operational environment and is the system secure and survivable?	Is the system reliable, available and maintainable?	Is the system audit ready?
			CTP 013: The system shall process system foundation data received from an external source.				SDT/GAT			
Cybersecurity										
SW & System Cybersecurity	8.0.0	RMF Compliance	**MOP CDI 2.1:** The system meets RMF requirements and IATT from the AO.	Program Protection Plan				SDT/GAT		
	8.0.0	Protect	**MOP CDI 2.2:** The implementation of the IPPS-A security controls at the Confidentiality, Integrity, and Availability (CIA) levels of Moderate, Moderate, Moderate, with an acceptable level of risk as determined by the AO and Security Control Assessor.					PLT (CVI)/SAT (CVPA)		

Functional Evaluation Areas Capability Areas	Key System Requirements and T&E Measures			Cross Reference	Acquisition/Program Decisions Supported					
					R4 FDD					
	Requirements Document Reference	Description	Measure		Does IPPS-A provide the pay services building upon Releases 2.0 and 3.0 to provide the basis for the fully integrated personnel and pay system?	Does IPPS-A enable designated personnel, with the appropriate training, to easily perform required tasks for R4 personnel and pay business processes?	Is IPPS-A interoperable with R4 interfacing networks and systems?	Does IPPS-A provide adequate data and resource protection in its intended operational environment and is the system secure and survivable?	Is the system reliable, available and maintainable?	Is the system audit ready?
	8.0.0	Detect	**CTP 006:** The system shall notify an authorized user of system security events.					DIT (Adversarial DT)		
	8.0.0	React and Restore	**MOP CDI 2.3:** IPPS-A capability to respond to detected intrusions and penetrations, exploitation of data, and/or attacks.					PLT (CTT) DIT (Adversarial DT)		
Reliability										
Reliability	6.1.5	Operational Availability	**MOP HLO 3.1:** Operational Availability (Ao).	HLO 3, Reliability Tracking Curve					DIT/GAT	
			MOP HLO 3.2: Mean Time Between System Aborts.						DIT/GAT	
			MOP HLO 3.3: Mean Time to Repair.						DIT/GAT	

Functional Evaluation Areas Capability Areas	Key System Requirements and T&E Measures			Cross Reference	Acquisition/Program Decisions Supported					
					R4 FDD					
	Requirements Document Reference	Description	Measure		Does IPPS-A provide the pay services building upon Releases 2.0 and 3.0 to provide the basis for the fully integrated personnel and pay system?	Does IPPS-A enable designated personnel, with the appropriate training, to easily perform required tasks for R4 personnel and pay business processes?	Is IPPS-A interoperable with R4 interfacing networks and systems?	Does IPPS-A provide adequate data and resource protection in its intended operational environment and is the system secure and survivable?	Is the system reliable, available and maintainable?	Is the system audit ready?
	6.3.127	Concurrent users	**CTP 005:** The system shall support access to 40,000 concurrent users. Managers/Leaders: 25% Members (Self-Service): 50% POI/HR Specialists/Admin: 25%						DIT	
	14.2.2	Training System	**CTP 008:** The Institutional training system shall have the capability to receive a training data refresh.						DIT/GAT	
			CTP 010: The Operational training system shall have the capability to receive a training data refresh.						DIT/GAT	

Functional Evaluation Areas Capability Areas	Key System Requirements and T&E Measures			Cross Reference	Acquisition/Program Decisions Supported					
					R4 FDD					
	Requirements Document Reference	Description	Measure		Does IPPS-A provide the pay services building upon Releases 2.0 and 3.0 to provide the basis for the fully integrated personnel and pay system?	Does IPPS-A enable designated personnel, with the appropriate training, to easily perform required tasks for R4 personnel and pay business processes?	Is IPPS-A interoperable with R4 interfacing networks and systems?	Does IPPS-A provide adequate data and resource protection in its intended operational environment and is the system secure and survivable?	Is the system reliable, available and maintainable?	Is the system audit ready?
			CTP 014: The Self Development/NET training system shall allow an authorized user to reset the training data set to its original state.						DIT/GAT	
			CTP 007: The Institutional training system shall allow an authorized user to reset the training data set to its original state.						DIT/GAT	
			CTP 009: The Operational training system shall allow an authorized user to reset the training data set to its original state.						DIT/GAT	

Functional Evaluation Areas Capability Areas	Key System Requirements and T&E Measures			Cross Reference	Acquisition/Program Decisions Supported					
					R4 FDD					
	Requirements Document Reference	Description	Measure		Does IPPS-A provide the pay services building upon Releases 2.0 and 3.0 to provide the basis for the fully integrated personnel and pay system?	Does IPPS-A enable designated personnel, with the appropriate training, to easily perform required tasks for R4 personnel and pay business processes?	Is IPPS-A interoperable with R4 interfacing networks and systems?	Does IPPS-A provide adequate data and resource protection in its intended operational environment and is the system secure and survivable?	Is the system reliable, available and maintainable?	Is the system audit ready?
	6.2.15.1.7.3	Continuity of Operations: Data Replication	**CTP 001:** The system shall replicate data from the primary center to a secondary data center upon the completion of the transaction.						DIT/GAT	
	6.1.5.2	Continuity of Operations: Failover/Disaster Recovery	**MOP CDI 4.4:** Time required to failover to a fully functional Secondary Data Center.						DIT	

7.8 Release 4 Mission Critical Pay Impacting Interfaces

The IPPS-A Increment II Release 4 interfaces are those interfaces that require testing and do not include interfaces tested in previous releases. Table 7-4 identifies those mission critical pay impacting interfaces for Release 4.

Table 7-4: Mission Critical Interfaces for Release 4*

Acronym	System Name	Description	Direction (I/O)	Organization
AAFES-JSCS	Army Air Force Exchange Services-Joint Services Collection System	The Army Air Force Exchange Services-Joint Services Collection System (AAFES-JSCS) captures, tracks and reports on debts from all Services that are incurred when a Service Member does not pay for charges or layaway from AAFES. Periodically (at least semi-monthly) there is an inbound interface of Army and Air Force Exchange Soldier Debt to start, stop, suspend, and change information on Service Members prior to the IPPS-A payroll calculation process. Based on the input from AAFES-JSCS, IPPS-A deducts the requested debt amount and returns the results (deductions, unable to deduct due to non-availability of funds, or partial deductions) as well as the actual payments.	I/O	Army Air Force Exchange Services (AAFES) - Non Appropriated Funds (NAF) activity
ADS	Automated Disbursing System	The Automated Disbursing System (ADS) is designed to automate the processing of disbursements, collections, and reporting payments for a variety of entitlement systems. ADS generates a series of bulk data files transmitted daily to DFAS-Columbus and the Federal Reserve Bank ACH System. These files contain both check and EFT payments from the entitlement systems and payments generated from manual input into ADS. EFT rejects and Notice of Change information from the financial institutions are transmitted back to ADS.	I/O	Defense Finance and Accounting Services (DFAS)

DDMS	Defense Debt Management System	The Defense Debt Management System (DDMS) is an on-line debt management system designed and developed to maintain, control and report on DoD individual out-of-service and delinquent debts, in accordance with current Federal debt collection laws and regulations. DDMS supports the consolidated Debt and Claims Management (D&CM) Directorate at DFAS-Indianapolis, which performs out-of-service debt collection on service members, retirees and former civilian employees who are no longer in an 'active' pay status on the respective military, retiree or civilian pay systems. DDMS facilitates the collection of debts owed to the Department of Defense (DoD); debts including, but not limited to, past due loan payments, overpayments, fines, interest, penalties, administrative fees, and amounts derived from damages, leases, and sales of real or personal property.	I/O	Defense Finance and Accounting Services (DFAS)
DDS	Deployable Disbursing System	The Deployable Disbursing System (DDS) is a disbursing system that will produce data in financial statements and bring financial data under general ledger control. Both the Treasury's Eagle Cash stored value card, and the check scanning OTCNet applications interface directly with DDS. The exchange process can also be linked to a local customer database that provides the user warnings when the customer has dishonored checks, exceeds an authorized check-cashing limit, or is within set number of days from permanent change of station. Entitlement systems such as IATS, 3in1, CAPS and GFEBS will provide a ready to pay file that DDS processes behind the scenes. At the end of the business day, accounting data can be produced for GFEBS, STANFINS, DCAS and E&C. Check payments in both US and foreign currency are available. DDS does have the capability to split disbursement for travel pay between the Government credit card and travelers. DDS will also create the SF1149 and SF 1179 for all check payments that are made.	I	Defense Finance and Accounting Services (DFAS)

DRAS	Defense Retiree & Annuitant Pay System	The Defense Retiree & Annuitant Pay System (DRAS) is the standard, consolidated system for paying Army, Navy, Marine Corps and Air Force military retirees, annuitants and former spouses. Additional subsystems of DRAS include Voluntary Separation Incentive (VSI), Victims of Abuse (VOA), Combat Related Special Compensation (CRSC), Concurrent Retirement and Disability Payments (CRDP) and Special Compensation for the Severely Disabled (SCSD). DRAS establishes, maintains and adjudicates pay accounts.	O	DRAS II Acq PMO - Defense Logistics Agency (DLA); System Owner - Defense Finance and Accounting Services (DFAS)
EZpay	Stored Value Card (SVC) System	EZpay is a cash management tool designed to support U.S. military personnel at Army basic training sites. EZpay cards are a type of payment card referred to as Stored Value Cards (SVC). The SVC comes pre-loaded with either $300, $350 or $400 as the trainee's advance of their first pay. Most trainees arrive without bank accounts, so this allows them time to set up an account for future direct deposits of their pay. Funds on the card can be used to purchase goods and services at the Post Exchange or Base Exchange, Military Clothing, on-post bank, and most concessionaires on base. EZpay sends IPPS-A the amount of money advanced to the Service Member.	I	U.S. Army Financial Management Command
IGS	Integrated Garnishment System	The Integrated Garnishment System (IGS) provides online processing of Alimony and Child Support garnishments cases for DoD Civilian, Military Personnel and e-payroll personnel; Commercial Garnishments against civilian employees; Military Commercial Debt Involuntary Allotments; Chapter 13 Bankruptcies for Military Retirees and Active Duty Navy. IGS is an automated system that guides Paralegals through legal validation to process cases.	I/O	Defense Finance and Accounting Services (DFAS)
IRS System	Internal Revenue System	The Internal Revenue System (IRS) system collects taxes, duties and monies paid to and due to the U.S. IPPS-A provides the required tax information for both the Service Member and the Army (employer) as prescribed by IRS regulations.	O	US Treasury

MAC	Fort Knox National Company - Military Assistance Company (KNFC-MAC)	The Military Assistance Company (MAC) initiates allotment payments for privatized housing on Army military installations for Service Members. MAC serves as a liaison between Defense Finance and Accounting Services (DFAS), Military Members, Military Housing Offices and Private companies nationwide by providing custom electronic interfaces and funds movement services. MAC provides IPPS-A an inbound periodic interface of member privatized military housing debt start, stop or change information and IPPS-A provides the results of the allotment start, stop or changes to MAC after each semi-monthly payroll cycle.	I/O	Defense Finance and Accounting Services (DFAS)
SSA	Social Security Administration System	The United States Social Security Administration (SSA) is an independent agency of the United States federal government that administers Social Security, a social insurance program consisting of retirement, disability, and survivors' benefits. IPPS-A provides earnings information to SSA as required by law.	O	Office of Data Exchange (ODX)
SORS	Salary Offset Reporting System	The Salary Offset Reporting System (SORS) collects, processes, and reports salary offsets for DoD employees who have incurred delinquent debts with non-DoD Federal creditor agencies and the DoD GTCC. It centralizes management of the salary offset process established by the Debt Collection Improvement Act (DCIA) of 1996. It also serves as the central DoD bridge between all DFAS payroll systems and the Department of the Treasury Offset Program (TOP).	I/O	Defense Finance and Accounting Services (DFAS)
State Tax	State Tax Systems	Many States have State income tax. IPPS-A will provide withholding and earnings information to these States based on the laws of the States and how they classify Military Pay and Service Member status.	O	State Taxing Authority
TDP	TRICARE Dental Program	1. TDP sends a semi-monthly inbound interface of TDP Premium and debt information. 2. Periodic (per IPPS-A pay cycle) outbound interface of Soldier TDP deductions taken or not taken information (post IPPS-A payroll processing).	I/O	TRICARE Dental Program

TSP	Thrift Savings Plan	The Thrift Savings Plan (TSP) is a government-sponsored defined contribution retirement savings plan available to Service Members. IPPS-A provides contributions, re-characterizations, re-designations, loan repayments, and catch-up contributions to TSP. TSP provides errors and rejects to IPPS-A.	I/O	Federal Retirement Thrift Investment Board (FRTIB)
USSDP	Uniformed Service Savings Deposit Program	The Uniformed Service Savings Deposit Program (USSDP) allows authorized members of the uniformed services to deposit up to $10000 maximum of their un-allotted current pay and allowances into this program during authorized deployments. USSDP provides IPPS-A a monthly file with the Service Member account balances for population of the Pay Stub. IPPS-A sends lump sums, allotments and status changes to USSDP as well as updated address information for 1099-INT generation.	I/O	Defense Finance and Accounting Services (DFAS)
WIA	Wounded In Action / Wounded Warrior Program	The DFAS Wounded in Action (WIA) program supports Service Members in the Wounded Warrior program to ensure their pay and the accounting for the pay is correct and that these VIP's receive the service they deserve. IPPS-A provides pay, personnel and unit data to WIA. WIA uses an inbound interface to IPPS-A to request information on newly designated Wounded Warriors.	I/O	Defense Finance and Accounting Services (DFAS)

*The Mission Critical Pay Impacting Interfaces for Release 4 will be confirmed at the Release 4 Critical Design Review by the PMO and FMD.

U.S. ARMY

Integrated Personnel and Pay System – Army (IPPS-A)

PART VIII:
Annex 4 to the
IPPS-A Increment II Post-Milestone B Test and Evaluation Master Plan for Release 5

Version 1.0
12 September 2017

Department of the Army
Program Executive Office Enterprise Information Systems
Integrated Personnel and Pay System - Army Project Management Office
2521 South Clark Street
Arlington, VA 22202

8 INTRODUCTION

8.1 Purpose

The purpose of the annex is to provide Increment II Release 5 specific information and updates to the main IPPS-A Increment II TEMP document relevant to Release 5.

8.2 Scope

This Annex to the IPPS-A Increment II TEMP presents updates and other information specific to Release 5. Together, the IPPS-A Increment II TEMP and this Annex is the complete TEMP for Release 5.

8.3 Release 5 Updates

TBD.

8.4 Release 5 Capabilities

Release 5, Additional Personnel Services, will be the final IPPS-A Increment II release and will result in full operational capability (FOC) of the IPPS-A system. Release 5 focuses on the personnel services not yet addressed by the previous releases. Specifically, it will incorporate remaining functions related to record evaluation and retention management, along with some predominant manual activities. In support of Release 5, the legacy field systems shown in Table 8-1 will be subsumed.

Table 8-1: Legacy Systems Subsumed by IPPS-A Release 5

Acronym	Full System Name	Description
KEYSTONE-RETAIN	KEYSTONE-Retention System - Client Server	Conversion interface of retention management information from KEYSTONE-RETAIN C/S supports reenlistment, retention and reclassification requirements.
SEPS	Single Evaluation Processing System	Conversion interface of Performance Evaluation information as part of Release 5 Implementation

8.5 Release 5 Test Schedule

Figure 8-1 is the estimated IPPS-A Increment II Release 5 Integrated Test Program Schedule. The schedule displays the overall time sequencing of the T&E phases, events, and milestones. ATEC will provide an operational assessment within 60 days after the end of operational testing.

Figure 8-1: IPPS-A Increment II Release 5 Integrated Program Test Schedule

The Release 5 Test Schedule will be provided in subsequent updates to the TEMP.

8.6 Release 5 Test and Evaluation Funding

Table 8-2 below provides the latest detailed Release 5 DT and OT funding projections by major test events and FY.

Table 8-2: IPPS-A Release 5 Test Funding Summary

The Release 5 Test Funding Summary will be provided in subsequent updates to the TEMP.

8.7 Release 5 Developmental Evaluation Framework

The Release 5 Developmental Evaluation Framework is depicted in Table 8-3.

Table 8-3: Developmental Evaluation Framework for Release 5

Functional Evaluation Areas / Capability Areas	Key System Requirements and T&E Measures			Cross Reference	Acquisition/Program Decisions Supported					
					R5 LFD					
	Requirements Document Reference	Description	Measure		Does IPPS-A provide the capability to record evaluations and execute retention management?	Does IPPS-A enable designated personnel, with the appropriate training, to easily perform required tasks for R5 personnel business processes?	Is IPPS-A interoperable with R5 interfacing networks and systems?	Does IPPS-A provide adequate data and resource protection in its intended operational environment and is the system secure and survivable?	Is the system reliable, available and maintainable?	Is the system audit ready?
Performance										
Personnel and Pay Support	6.1.4	Single Multi-Component Service Record	**MOP HLO 1:** Number of Soldiers accounted for by more than one Component in a Present for Duty status.	HLO 1	SDT/GAT					
	6.1.1	Streamline Data Entry Process Using Single-Input, Near Real-Time Updating Capability	**MOP HLO 2.1:** Number of data fields requiring duplicate input to populate IPPS-A personnel and pay functionality.	HLO 2	SDT/GAT					
			MOP HLO 2.2: The SME and user ratings and feedback regarding single transaction update performance.		GAT					

Functional Evaluation Areas Capability Areas	Key System Requirements and T&E Measures			Cross Reference	Acquisition/Program Decisions Supported					
					R5 LFD					
	Requirements Document Reference	Description	Measure		Does IPPS-A provide the capability to record evaluations and execute retention management?	Does IPPS-A enable designated personnel, with the appropriate training, to easily perform required tasks for R5 personnel business processes?	Is IPPS-A interoperable with R5 interfacing networks and systems?	Does IPPS-A provide adequate data and resource protection in its intended operational environment and is the system secure and survivable?	Is the system reliable, available and maintainable?	Is the system audit ready?
	6.3.111	Pay Computation	**MOP CDI 1.1:** Proportion of accurately computed payroll calculation to the total number of payroll calculations attempted (including entitlements, deductions and benefits).	PO 2						
			CTP 004: The system shall process payroll and generate a pay disbursement file.							
	6.2.25	Support Net-Centric Military Operations	**MOP HLO 4:** Percentage of multi-Component strength information that is available for accounting and manning purposes upon updating and saving individual changes.	HLO 4						

Functional Evaluation Areas Capability Areas	Key System Requirements and T&E Measures			Cross Reference	Acquisition/Program Decisions Supported					
					R5 LFD					
	Requirements Document Reference	Description	Measure		Does IPPS-A provide the capability to record evaluations and execute retention management?	Does IPPS-A enable designated personnel, with the appropriate training, to easily perform required tasks for R5 personnel business processes?	Is IPPS-A interoperable with R5 interfacing networks and systems?	Does IPPS-A provide adequate data and resource protection in its intended operational environment and is the system secure and survivable?	Is the system reliable, available and maintainable?	Is the system audit ready?
	6.2.9	Data Retrieval	**CTP 002:** The system shall allow an authorized user to retrieve pre-defined personnel and pay data on individuals contained within the system.		SDT/GAT					
			CTP 003: The system shall allow an authorized user to retrieve pre-defined personnel and pay data on individuals contained within the system.		SDT/GAT					
	6.2.17	Provide Soldier a Self-Service Personnel and Pay Capability	**MOP HLO 8:** Number of online individual personnel and pay updates or requests available to the Soldier.	HLO 8	SDT/GAT					

Functional Evaluation Areas Capability Areas	Key System Requirements and T&E Measures			Cross Reference	Acquisition/Program Decisions Supported					
					R5 LFD					
	Requirements Document Reference	Description	Measure		Does IPPS-A provide the capability to record evaluations and execute retention management?	Does IPPS-A enable designated personnel, with the appropriate training, to easily perform required tasks for R5 personnel business processes?	Is IPPS-A interoperable with R5 interfacing networks and systems?	Does IPPS-A provide adequate data and resource protection in its intended operational environment and is the system secure and survivable?	Is the system reliable, available and maintainable?	Is the system audit ready?
	6.2.7	Improvement of Transaction Auditability	**MOP CDI 1.2-1**: The proportion of the successful number of required transaction written to an unalterable pre-defined audit tables to the total number of required transactions.	PO 6						SDT/GAT
			MOP CDI 1.2-2: The percentage of transactions initiated within IPPS-A that are successfully traced from initiation, approval, and posting, to include supporting documentation.							SDT/GAT

Functional Evaluation Areas Capability Areas	Key System Requirements and T&E Measures			Cross Reference	Acquisition/Program Decisions Supported					
					R5 LFD					
	Requirements Document Reference	Description	Measure		Does IPPS-A provide the capability to record evaluations and execute retention management?	Does IPPS-A enable designated personnel, with the appropriate training, to easily perform required tasks for R5 personnel business processes?	Is IPPS-A interoperable with R5 interfacing networks and systems?	Does IPPS-A provide adequate data and resource protection in its intended operational environment and is the system secure and survivable?	Is the system reliable, available and maintainable?	Is the system audit ready?
Human Systems Integration	15.7.0	Overall System Usability	**MOP CDI 3.1:** Percentage of favorable User opinion rating on System Usability Scale (SUS) on ease of use of IPPS-A applications and functions. Percentage of system design characteristics that adhere to HFE best practices guidelines and standards. ATEC SEP Usability metrics including mean number of tasks required to complete an end-to-end business process; and total number of steps required to complete a task.	HLO 8		GAT				

Functional Evaluation Areas Capability Areas	Key System Requirements and T&E Measures			Cross Reference	Acquisition/Program Decisions Supported					
					R5 LFD					
	Requirements Document Reference	Description	Measure		Does IPPS-A provide the capability to record evaluations and execute retention management?	Does IPPS-A enable designated personnel, with the appropriate training, to easily perform required tasks for R5 personnel business processes?	Is IPPS-A interoperable with R5 interfacing networks and systems?	Does IPPS-A provide adequate data and resource protection in its intended operational environment and is the system secure and survivable?	Is the system reliable, available and maintainable?	Is the system audit ready?
	15.7.0	Effectiveness	**MOP CDI 3.2:** Proportion of users able to complete each task on the first try without assistance or error.	HLO 8		GAT				
	15.7.0	Trainability	**MOP CDI 3.3:** Proportion of user and SME positive ratings. SMEs include PeopleSoft Consultants providing input to the design and training to the program office, and observer controllers (OCs).			GAT				
	15.7.0	Trust in Technology	**MOP CDI 3.4:** Proportion of user positive ratings.			GAT				

Functional Evaluation Areas Capability Areas	Key System Requirements and T&E Measures			Cross Reference	Acquisition/Program Decisions Supported					
					R5 LFD					
	Requirements Document Reference	Description	Measure		Does IPPS-A provide the capability to record evaluations and execute retention management?	Does IPPS-A enable designated personnel, with the appropriate training, to easily perform required tasks for R5 personnel business processes?	Is IPPS-A interoperable with R5 interfacing networks and systems?	Does IPPS-A provide adequate data and resource protection in its intended operational environment and is the system secure and survivable?	Is the system reliable, available and maintainable?	Is the system audit ready?
Integrated Logistics Support	8.0.0	Enterprise Administration	**MOP CDI 4.1:** System Administrator personnel rating and comments regarding the adequacy of software tools, system administration and user guides and administrative documentation to manage system and network configuration.	PO 7		GAT				
	6.2.21	Help Desk Support	**MOP CDI 4.2-1:** The SME and user rating and comments regarding adequacy for the helpdesk to resolve problems. SMEs include PeopleSoft Consultants providing input to the design and training to the program office, and observer controllers (OCs).			GAT				

Functional Evaluation Areas Capability Areas	Key System Requirements and T&E Measures			Cross Reference	Acquisition/Program Decisions Supported					
					R5 LFD					
	Requirements Document Reference	Description	Measure		Does IPPS-A provide the capability to record evaluations and execute retention management?	Does IPPS-A enable designated personnel, with the appropriate training, to easily perform required tasks for R5 personnel business processes?	Is IPPS-A interoperable with R5 interfacing networks and systems?	Does IPPS-A provide adequate data and resource protection in its intended operational environment and is the system secure and survivable?	Is the system reliable, available and maintainable?	Is the system audit ready?
			MOP CDI 4.2-2: Proportion of problems submitted that were resolved by the helpdesk within 4 hours (critical priority) or 24 hours (high priority) to all critical and high priority problems submitted.			GAT				
	6.3.130	Efficiency	**MOP CDI 4.3:** Proportion of user induced errors that were corrected/resolved without use of the help desk.			GAT				
Interoperability										

Functional Evaluation Areas Capability Areas	Key System Requirements and T&E Measures			Cross Reference	Acquisition/Program Decisions Supported					
					R5 LFD					
	Requirements Document Reference	Description	Measure		Does IPPS-A provide the capability to record evaluations and execute retention management?	Does IPPS-A enable designated personnel, with the appropriate training, to easily perform required tasks for R5 personnel business processes?	Is IPPS-A interoperable with R5 interfacing networks and systems?	Does IPPS-A provide adequate data and resource protection in its intended operational environment and is the system secure and survivable?	Is the system reliable, available and maintainable?	Is the system audit ready?
Net-Ready	6.1.7	Enter and be managed in the network	**MOP HLO 5:** Time required for the Soldier to connect to IPPS-A initial page, once his connection has reached the IPPS-A accreditation boundary (IPPS-A Data Center).	HLO 5			SDT/GAT			
	7.1.0	Data Exchanges (Joint Systems)	**MOP HLO 6.1:** Percentage of pay-impacting data elements received and accurately processed by IPPS-A IAW the SIA.	HLO 6			SDT/GAT			
			MOP HLO 6.2: Percentage of pay impacting data elements transmitted IAW the SIA.	HLO 6			SDT/GAT			

Functional Evaluation Areas Capability Areas	Key System Requirements and T&E Measures			Cross Reference	Acquisition/Program Decisions Supported					
					R5 LFD					
	Requirements Document Reference	Description	Measure		Does IPPS-A provide the capability to record evaluations and execute retention management?	Does IPPS-A enable designated personnel, with the appropriate training, to easily perform required tasks for R5 personnel business processes?	Is IPPS-A interoperable with R5 interfacing networks and systems?	Does IPPS-A provide adequate data and resource protection in its intended operational environment and is the system secure and survivable?	Is the system reliable, available and maintainable?	Is the system audit ready?
	7.1.0	Data Exchanges (Non-Joint Systems)	**MOP HLO 7.1:** Percentage of pay-impacting data elements received and accurately processed by IPPS-A IAW the SIA.	HLO 7			SDT/GAT			
			MOP HLO 7.2: Percentage of pay impacting data elements transmitted IAW the SIA.	HLO 7			SDT/GAT			
	7.1.0	Data Accuracy: Non pay impacting elements	**CTP 011:** The system shall provide non pay-impacting data to an external system.	BO 4			SDT/GAT			
			CTP 012: The system shall process non pay-impacting data received from an external system.				SDT/GAT			

Functional Evaluation Areas Capability Areas	Key System Requirements and T&E Measures			Cross Reference	Acquisition/Program Decisions Supported					
					R5 LFD					
	Requirements Document Reference	Description	Measure		Does IPPS-A provide the capability to record evaluations and execute retention management?	Does IPPS-A enable designated personnel, with the appropriate training, to easily perform required tasks for R5 personnel business processes?	Is IPPS-A interoperable with R5 interfacing networks and systems?	Does IPPS-A provide adequate data and resource protection in its intended operational environment and is the system secure and survivable?	Is the system reliable, available and maintainable?	Is the system audit ready?
			CTP 013: The system shall process system foundation data received from an external source.				SDT/GAT			
Cybersecurity										
SW & System Cybersecurity	8.0.0	RMF Compliance	**MOP CDI 2.1:** The system meets RMF requirements and IATT from the AO.	Program Protection Plan				SDT/GAT		
	8.0.0	Protect	**MOP CDI 2.2:** The implementation of the IPPS-A security controls at the Confidentiality, Integrity, and Availability (CIA) levels of Moderate, Moderate, Moderate, with an acceptable level of risk as determined by the AO and Security Control Assessor.					PLT (CVI)/SAT (CVPA)		

Functional Evaluation Areas Capability Areas	Key System Requirements and T&E Measures			Cross Reference	Acquisition/Program Decisions Supported					
					R5 LFD					
	Requirements Document Reference	Description	Measure		Does IPPS-A provide the capability to record evaluations and execute retention management?	Does IPPS-A enable designated personnel, with the appropriate training, to easily perform required tasks for R5 personnel business processes?	Is IPPS-A interoperable with R5 interfacing networks and systems?	Does IPPS-A provide adequate data and resource protection in its intended operational environment and is the system secure and survivable?	Is the system reliable, available and maintainable?	Is the system audit ready?
	8.0.0	Detect	**CTP 006:** The system shall notify an authorized user of system security events.					DIT (Adversarial DT)		
	8.0.0	React and Restore	**MOP CDI 2.3:** IPPS-A capability to respond to detected intrusions and penetrations, exploitation of data, and/or attacks.					PLT (CTT) DIT (Adversarial DT)		
Reliability										
Reliability	6.1.5	Operational Availability	**MOP HLO 3.1:** Operational Availability (Ao).	HLO 3, Reliability Tracking Curve					DIT/GAT	
			MOP HLO 3.2: Mean Time Between System Aborts.						DIT/GAT	
			MOP HLO 3.3: Mean Time to Repair.						DIT/GAT	

Functional Evaluation Areas Capability Areas	Key System Requirements and T&E Measures			Cross Reference	Acquisition/Program Decisions Supported					
					R5 LFD					
	Requirements Document Reference	Description	Measure		Does IPPS-A provide the capability to record evaluations and execute retention management?	Does IPPS-A enable designated personnel, with the appropriate training, to easily perform required tasks for R5 personnel business processes?	Is IPPS-A interoperable with R5 interfacing networks and systems?	Does IPPS-A provide adequate data and resource protection in its intended operational environment and is the system secure and survivable?	Is the system reliable, available and maintainable?	Is the system audit ready?
	6.3.127	Concurrent users	**CTP 005:** The system shall support access to 40,000 concurrent users. Managers/Leaders: 25% Members (Self-Service): 50% POI/HR Specialists/Admin: 25%						DIT	
	14.2.2	Training System	**CTP 008:** The Institutional training system shall have the capability to receive a training data refresh.						DIT/GAT	
			CTP 010: The Operational training system shall have the capability to receive a training data refresh.						DIT/GAT	

Functional Evaluation Areas Capability Areas	Key System Requirements and T&E Measures			Cross Reference	Acquisition/Program Decisions Supported					
					R5 LFD					
	Requirements Document Reference	Description	Measure		Does IPPS-A provide the capability to record evaluations and execute retention management?	Does IPPS-A enable designated personnel, with the appropriate training, to easily perform required tasks for R5 personnel business processes?	Is IPPS-A interoperable with R5 interfacing networks and systems?	Does IPPS-A provide adequate data and resource protection in its intended operational environment and is the system secure and survivable?	Is the system reliable, available and maintainable?	Is the system audit ready?
			CTP 014: The Self Development/NET training system shall allow an authorized user to reset the training data set to its original state.						DIT/GAT	
			CTP 007: The Institutional training system shall allow an authorized user to reset the training data set to its original state.						DIT/GAT	
			CTP 009: The Operational training system shall allow an authorized user to reset the training data set to its original state.						DIT/GAT	

Functional Evaluation Areas Capability Areas	Key System Requirements and T&E Measures			Cross Reference	Acquisition/Program Decisions Supported					
					R5 LFD					
	Requirements Document Reference	Description	Measure		Does IPPS-A provide the capability to record evaluations and execute retention management?	Does IPPS-A enable designated personnel, with the appropriate training, to easily perform required tasks for R5 personnel business processes?	Is IPPS-A interoperable with R5 interfacing networks and systems?	Does IPPS-A provide adequate data and resource protection in its intended operational environment and is the system secure and survivable?	Is the system reliable, available and maintainable?	Is the system audit ready?
	6.2.15.1.7.3	Continuity of Operations: Data Replication	**CTP 001:** The system shall replicate data from the primary center to a secondary data center upon the completion of the transaction.						DIT/GAT	
	6.1.5.2	Continuity of Operations: Failover/Disaster Recovery	**MOP CDI 4.4:** Time required to failover to a fully functional Secondary Data Center.						DIT	

8.8 Release 5 Mission Critical Pay Impacting Interfaces

The IPPS-A Increment II Release 5 interfaces are those interfaces that require testing and do not include interfaces tested in previous releases. Table 8-4 identifies those mission critical pay impacting interfaces for Release 5.

Table 8-4: Mission Critical Interfaces for Release 5*

Acronym	System Name	Description	Direction (I/O)	Organization
TBD*	TBD*	TBD*	TBD*	TBD*

*The Mission Critical Pay Impacting Interfaces for Release 5 will be determined at the Release 5 Critical Design Review by the PMO and FMD.