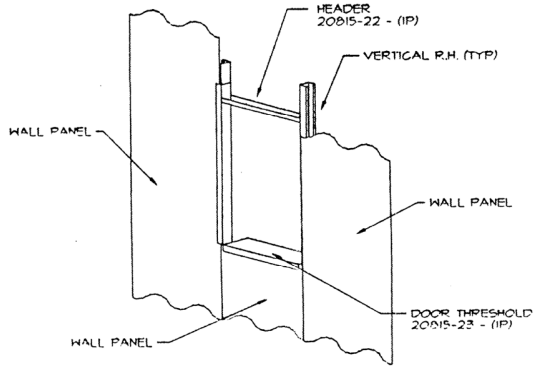

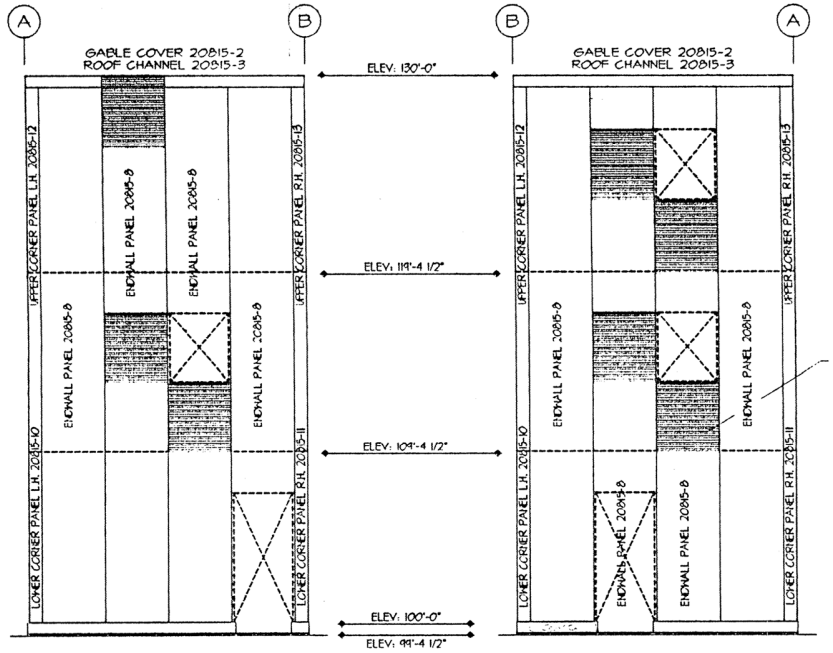

LEFT TOWER ELEVATION
GRID 1

RIGHT TOWER ELEVATION
GRID 2

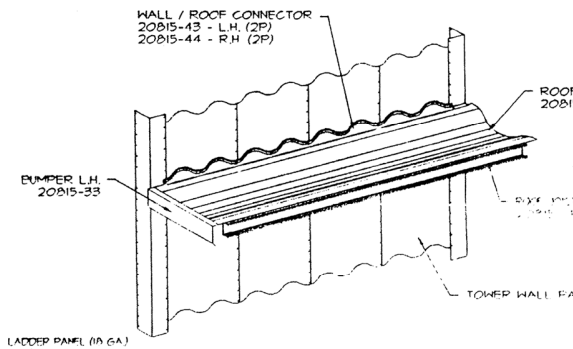

GARAGE - TOWER CONNECTION

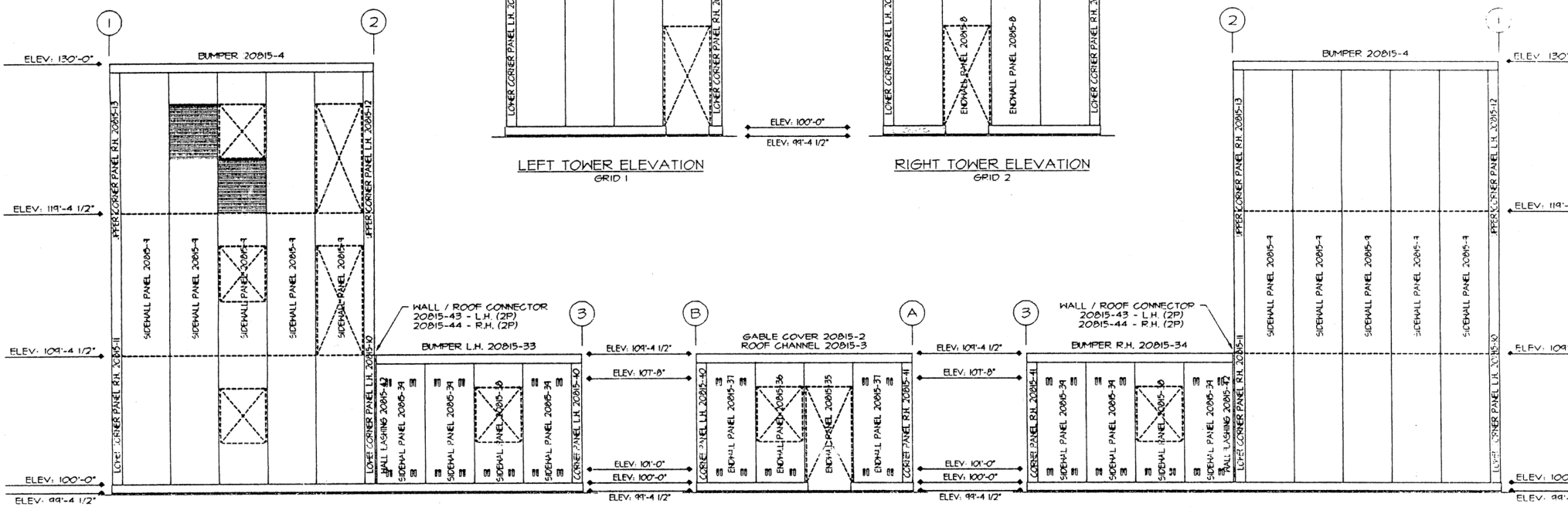

FRONT TOWER ELEVATION
GRID B

ANNEX ELEVATION
GRID 3

BACK TOWER ELEVATION
GRID A

15'-1" x 18'-6" x 30' FIRETOWER c/w
15'-1" x 14'-6" x 10' GARAGE ANNEX
ON A 7 1/2" CURB

FOR CONSTRUCTION

PROVINCE OF MANITOBA
Mar 30/98
F.J. DENISET
REGISTERED ENGINEER

LETTER	DESCRIPTION	NAME	DATE
	REVISED FOR CONSTRUCTION	DAVE R.	MAR. 25 '98

REVISIONS

FIRETOWER AND ANNEX ELEVATIONS

BUILDING TYPE: FIRETOWER	USE: COMMERCIAL
DRAWN BY: D.R.	DATE: MAR. 4, 1998
CHECKED BY:	DATE:
SCALE: NOT TO SCALE	YOUR ORDER: 20815

DEALER: WERNER - HERBISON - PADGETT
DES PLAINES, ILLINOIS, U.S.A. 60016
CUSTOMER: HOLLOMAN AIR FORCE BASE
HOLLOMAN A.F.B. NEW MEXICO, U.S.A.
BUILDING NAME: FT-3 / FT-1a TRAINING SIMULAT
BUILDING JOB SITE: HOLLOMAN A.F.B. NEW MEXIC

BEHLE INDUSTRIES
QUASAR
ISO 9001
921 DOUGLAS STREET, BRANDON, MANITOBA R7A 1B3

1091-3

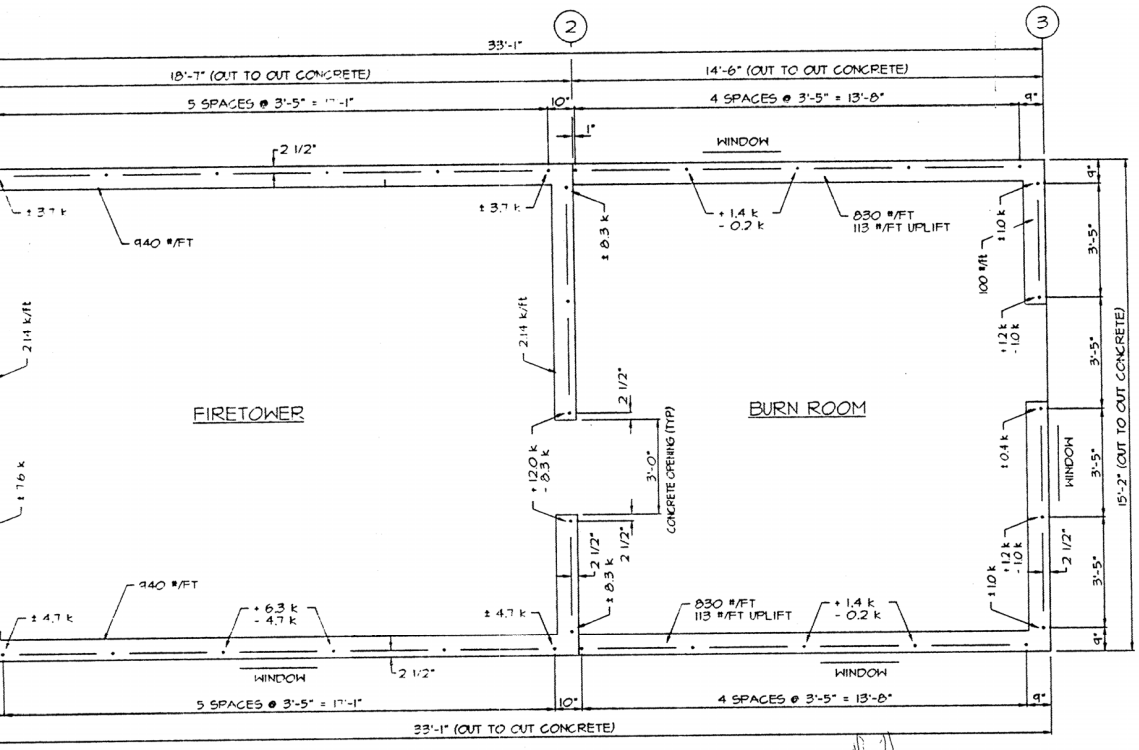

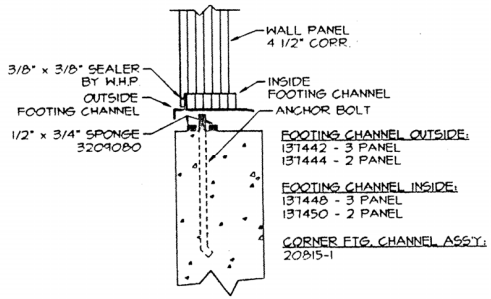

DESIGN LOADS (PSF)
ROOF LOAD = 100
FLOOR LOAD = 100
ATTIC LOAD = 100
COLLATERAL = 5
WIND LOAD = 25

OVERTURNING LOADS HAVE BEEN REDUCED 25%

+ DOWNLOAD
- UPLIFT
GRID LINES INDICATE CONCRETE LINES

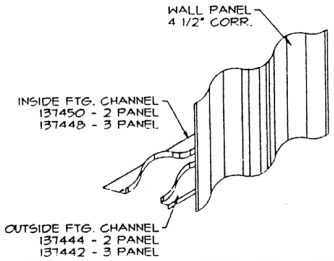

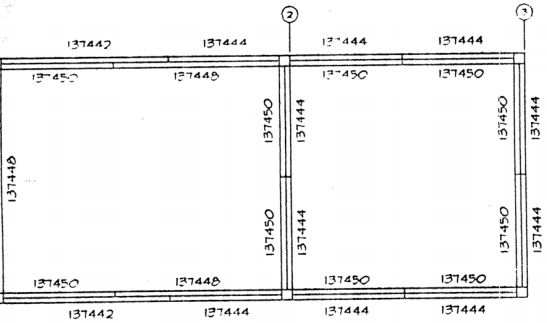

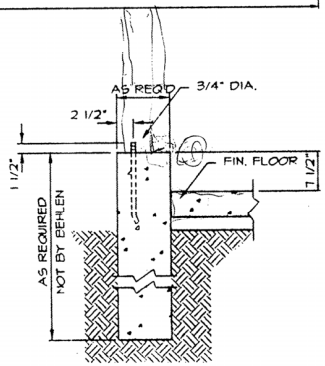

FOUNDATION DETAIL TYP.

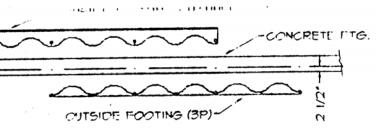

NOTE: STAGGER FOOTING CHANNEL AS SHOWN

1091-3

PROVINCE OF MANITOBA
Mar 3-1998
F. J. DENISET
REGISTERED ENGINEER

FOR CONSTRUCTION

	REVISED FOR CONSTRUCTION	DAVE R.	MAR 25 98
1 PTTP	DESCRIPTION	NAME	DATE

FIRETOWER
ANCHOR
BOLT
PLAN

15'-1" x 18'-6" x 30' FIRETOWER c/w
15'-1" x 14'-6" x 10' GARAGE ANNEX
ON A 7 1/2" CIPD

DEALER: WERNER - HERBISON - PADGETT
DES PLAINES, ILLINOIS U.S.A. 60016
CUSTOMER: HOLLOMAN AIR FORCE BASE
HOLLOMAN A.F.B. NEW MEXICO, U.S.A.
BUILDING NAME: FT-3 / FT-10 TRAINING SIMULATOR
BUILDING JOB SITE: HOLLOMAN A.F.B. NEW MEXICO

SHT. 1 OF 8

BUILDING TYPE: FIRETOWER	USE: COMMERCIAL
DRAWN BY: D.R.	DATE: MAR. 4, 1998
CHECKED BY:	DATE:
SCALE: NOT TO SCALE	DRAWING NUMBER: 20815

BEHLEN INDUSTRIES
QUASAR 1990 GROUP
WESTMAN GROUP
921 DOUGLAS STREET BRANDON, MANITOBA, R7A 7B3, 1-204-728-1150

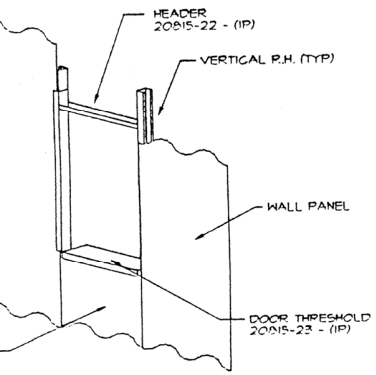

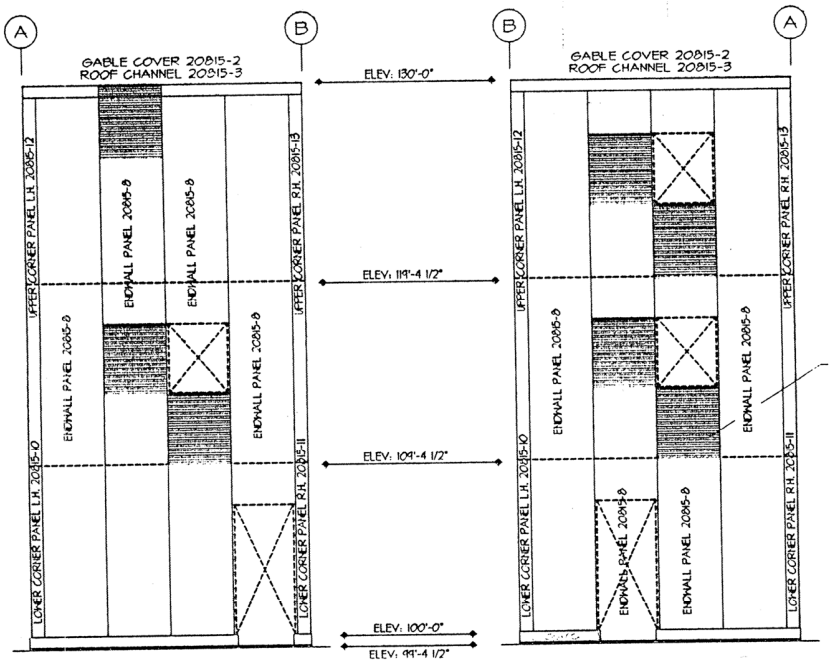

LEFT TOWER ELEVATION
GRID 1

RIGHT TOWER ELEVATION
GRID 2

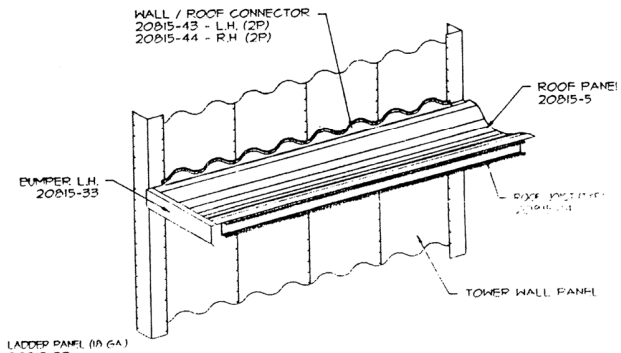

GARAGE - TOWER CONNECTION

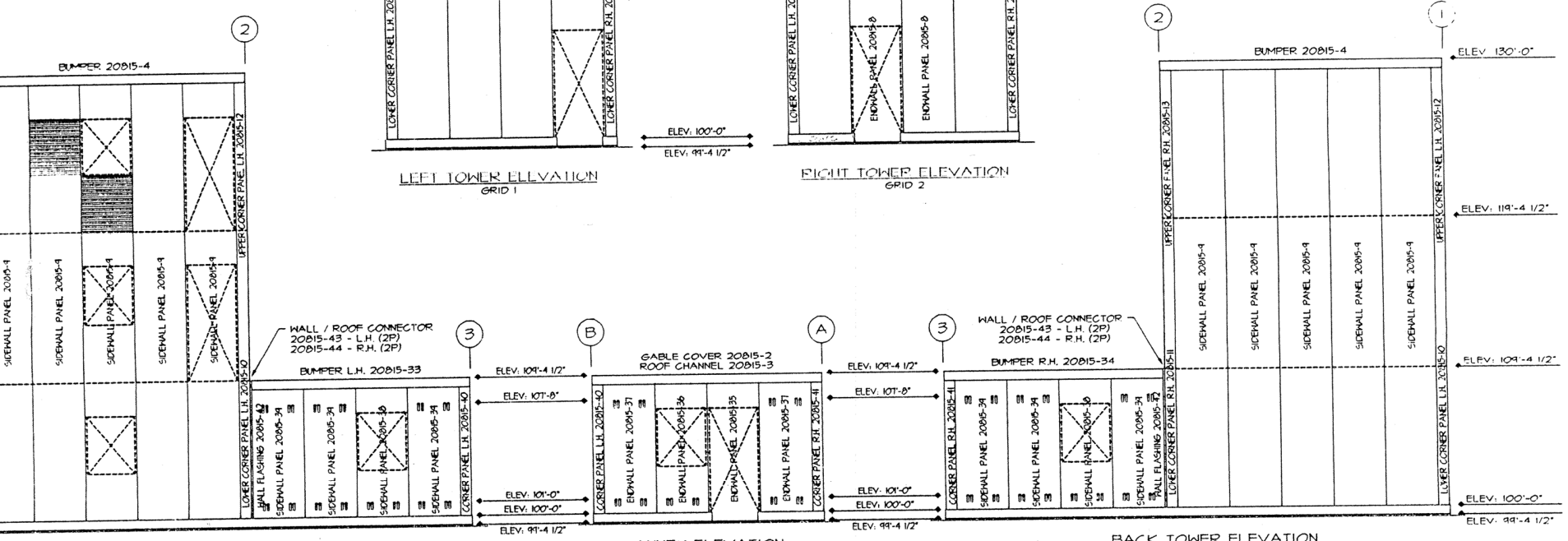

FRONT TOWER ELEVATION
GRID B

ANNEX ELEVATION
GRID 3

BACK TOWER ELEVATION
GRID A

15'-1" x 18'-6" x 30' FIRETOWER C/H
15'-1" x 14'-6" x 10' GARAGE ANNEX
ON A 7 1/2" CURB

FOR CONSTRUCTION

LETTER	DESCRIPTION	NAME	DATE
	REVISED FOR CONSTRUCTION	DAVE R.	MAR. 25 '98

REVISIONS

PROVINCE OF MANITOBA
Mar 30/98
F.J. DENISET
REGISTERED ENGINEER

FIRETOWER AND ANNEX ELEVATIONS

DEALER: WERNER - HERBISON - PADGETT
DES PLAINES, ILLINOIS, U.S.A. 60016
CUSTOMER: HOLLOMAN AIR FORCE BASE
HOLLOMAN A.F.B. NEW MEXICO, U.S.A.
BUILDING NAME: FT-3 / FT-1a TRAINING SIMULATOR
BUILDING JOB SITE: HOLLOMAN A.F.B. NEW MEXICO

SHT 3 OF 8

BUILDING TYPE: FIRETOWER	USE: COMMERCIAL
DRAWN BY: D.R.	DATE: MAR. 4, 1998
CHECKED BY:	DATE:
SCALE: NOT TO SCALE	WORK ORDER: 20815

BEHLEN INDUSTRIES
QUASAR
WESTMAN GROUP
971 DOUGLAS STREET, BRANDON, MANITOBA R7A 7B3, 1-204-728-11

1091-3