ABBREVIATIONS

ABL = ABOVE BASELINE
AUX = AUXILIARY
DWL = DESIGN WATERLINE
EMR = EMERGENCY
INBD = INBOARD
LKG = LOOKING
LKR = LOCKER
TYP = TYPICAL
WC = WATERCLOSET
WT = WATERTIGHT

GENERAL NOTES

1. UNITS AND SIZES ARE US CUSTOMARY, DIMENSIONS ARE IN INCHES UNLESS OTHERWISE NOTED.

REVISIONS

REV	SH	ZONE	ITEM	DESCRIPTION	DATE	APPVL SIG & ORG
0	–	–	–	PRELIMINARY RELEASE FOR DRAFT RFP	02/24/26	

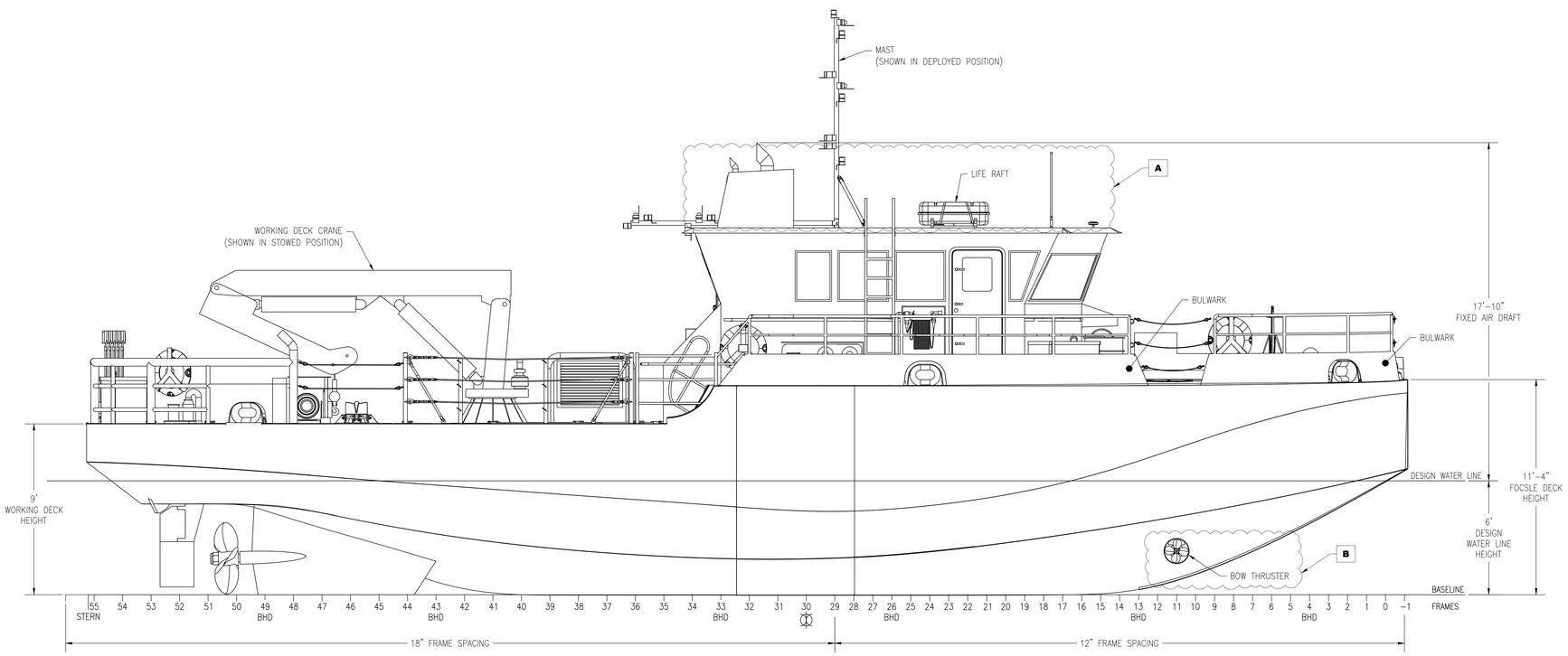

OUTBOARD PROFILE

STBD LKG INBD
SCALE: 3/8"=1'–0"

NO.	TITLE	DRAWING NO.
4		
3		
2		
1	TBD	TBD

REFERENCE PLANS

SPECIAL NOTATIONS

PRELIMINARY DRAWING ISSUED TO SUPPORT DRAFT RFP. DRAWING IS UNDER DEVELOPMENT, AND NOT APPROVED.

RESERVATIONS:
A: TOPSIDE ARRANGEMENT IN DEVELOPMENT.
B: BOW THRUSTER IN DEVELOPMENT.
C: WORKING DECK ACCESS DOOR ARRANGEMENT IN DEVELOPMENT.

STINFO DESIGNATION

DISTRIBUTION STATEMENT D: DISTRIBUTION AUTHORIZED TO DHS/CG/DOD AND THEIR CONTRACTORS FOR ADMINISTRATIVE AND OPERATIONAL PURPOSES; 02/24/2026. OTHER REQUESTS SHALL BE REFERRED TO CG–SEA–A8.
DESTRUCTION NOTICE: FOR UNCLASSIFIED, LIMITED DOCUMENTS, DESTROY BY ANY METHOD THAT WILL PREVENT DISCLOSURE OF CONTENTS OR RECONSTRUCTION OF THE DOCUMENT.

UNITED STATES COAST GUARD WASHINGTON, D.C. 20593
OFFICE OF NAVAL ENGINEERING

69 FT HSCL
HOMELAND SECURITY CUTTER LIGHT
GENERAL ARRANGEMENT
OUTBOARD PROFILE

DESIGNED: DSGN SIG /s/ MM/DD/YY
DRAWN: DRWN SIG /s/ MM/DD/YY
CHECKED: CHKD SIG /s/ MM/DD/YY
APPROVED: APVD SIG /s/ MM/DD/YY
USCG APPROVAL MM/DD/YY
APPVL SIG /s/
APPVL AUTH

SELECTED RECORD DRAWING
UPDATE REQUIRED FOR ALL AUTHORIZED CONFIGURATION CHANGES.

SIZE	CAGE CODE	USCG DRAWING NO.	REV
H	81340	69–HSCL–601–001	0

SCALE: 3/8"=1'–0" SHEET: 1 OF 3

0 1' 2' 3' 4' 5' 6' 7' 8'
SCALE: 3/8"=1'–0"

SHEET REVISION STATUS AND SUBTITLE INDEX

SH	REV	SHEET SUBTITLE
3	0	INBOARD PROFILE AND INTERIOR ARRANGEMENT
2	0	MAIN DECK, PILOTHOUSE, AND FORE / AFT VIEWS
1	0	OUTBOARD PROFILE

APPLICABILITY

69–HSCL	ALL BOATS
ASSET CLASS	HULLS

ELECTRONIC FILE NAME:
69–HSCL_601_001_0 General Arrangement.dwg

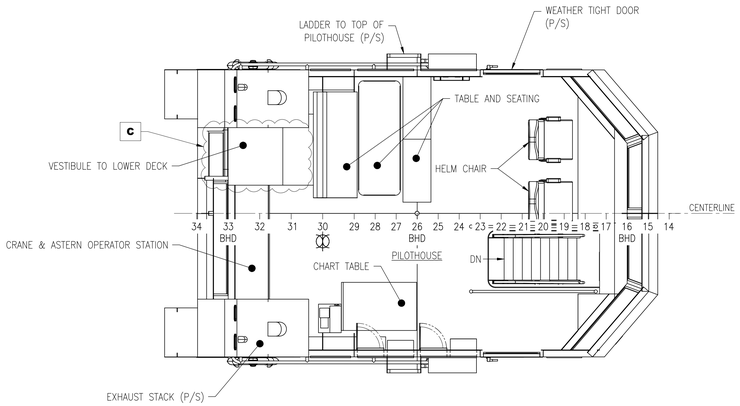

PILOTHOUSE ARRANGEMENT

SCALE: 3/8"= 1'-0"

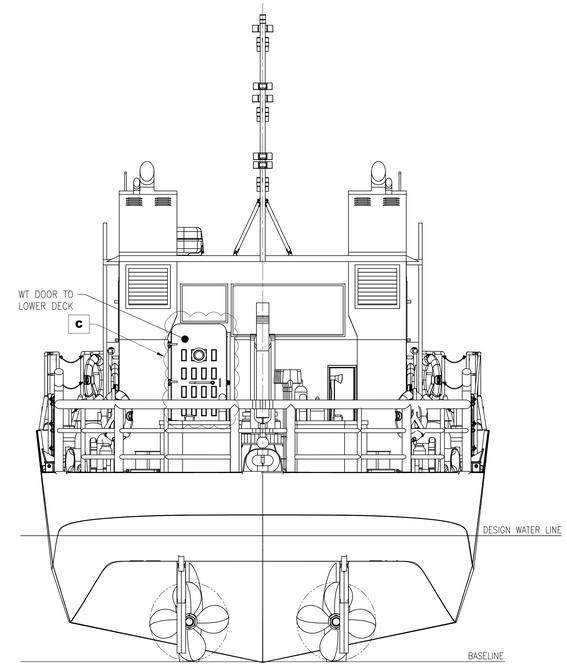

STERN VIEW

LKG FWD

SCALE: 3/8"= 1'-0"

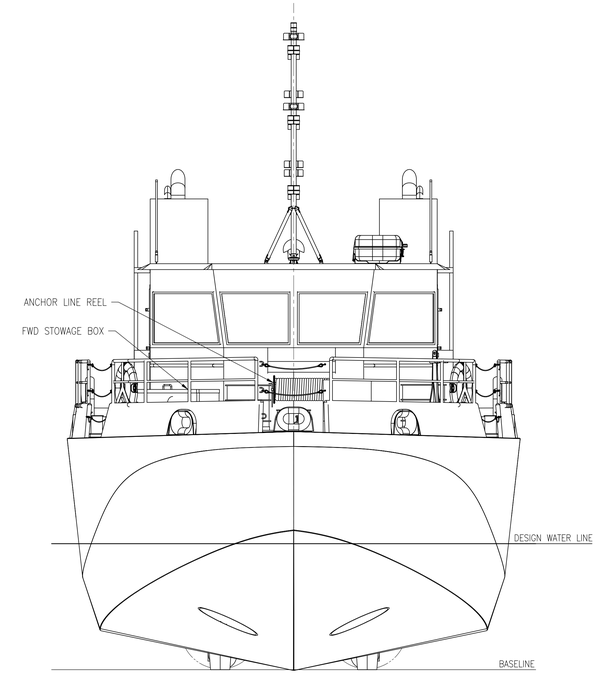

BOW VIEW

LKG AFT

SCALE: 3/8"= 1'-0"

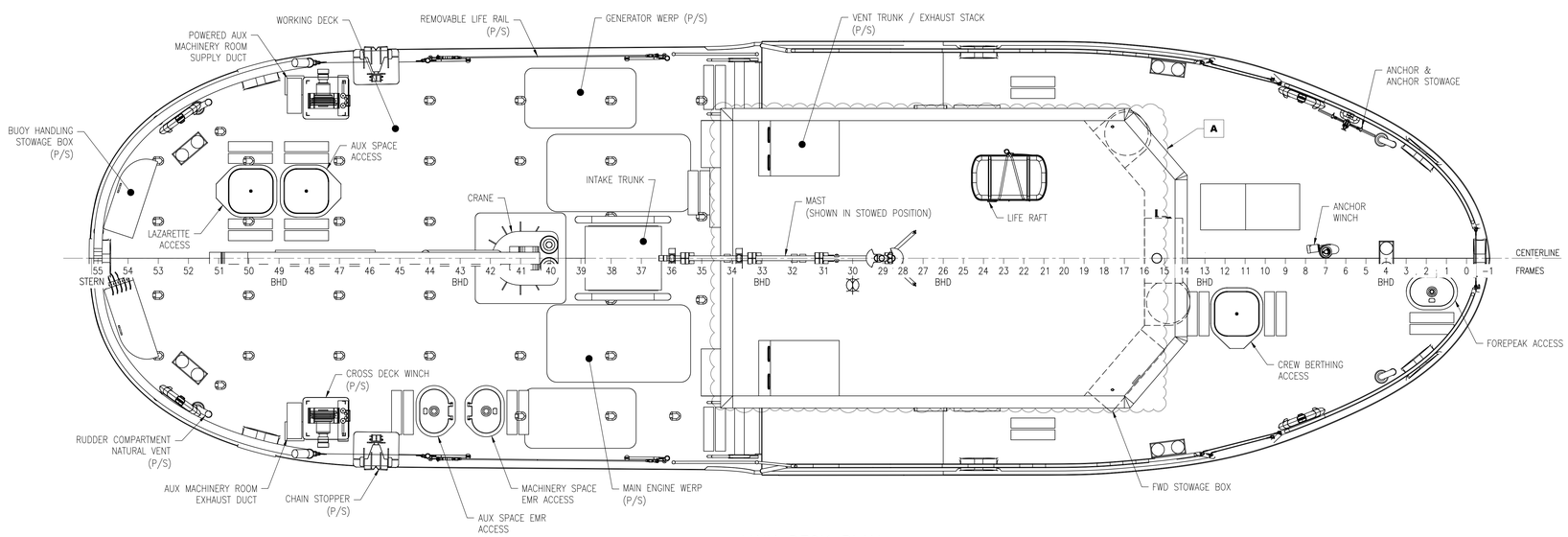

MAIN DECK PLAN

SCALE: 3/8"= 1'-0"

0 1' 2' 3' 4' 5' 6' 7' 8'

SCALE: 3/8"=1'-0"

HOMELAND SECURITY CUTTER LIGHT
GENERAL ARRANGEMENT
MAIN DECK, PILOTHOUSE, AND FORE / AFT VIEWS

SIZE	CAGE CODE	USCG DRAWING NO.	REV
H	81340	69-HSCL-601-001	0
SCALE: 3/8"=1'-0"			SHEET: 2

ELECTRONIC FILE NAME:
69-HSCL_601_001_0 General Arrangement.dwg

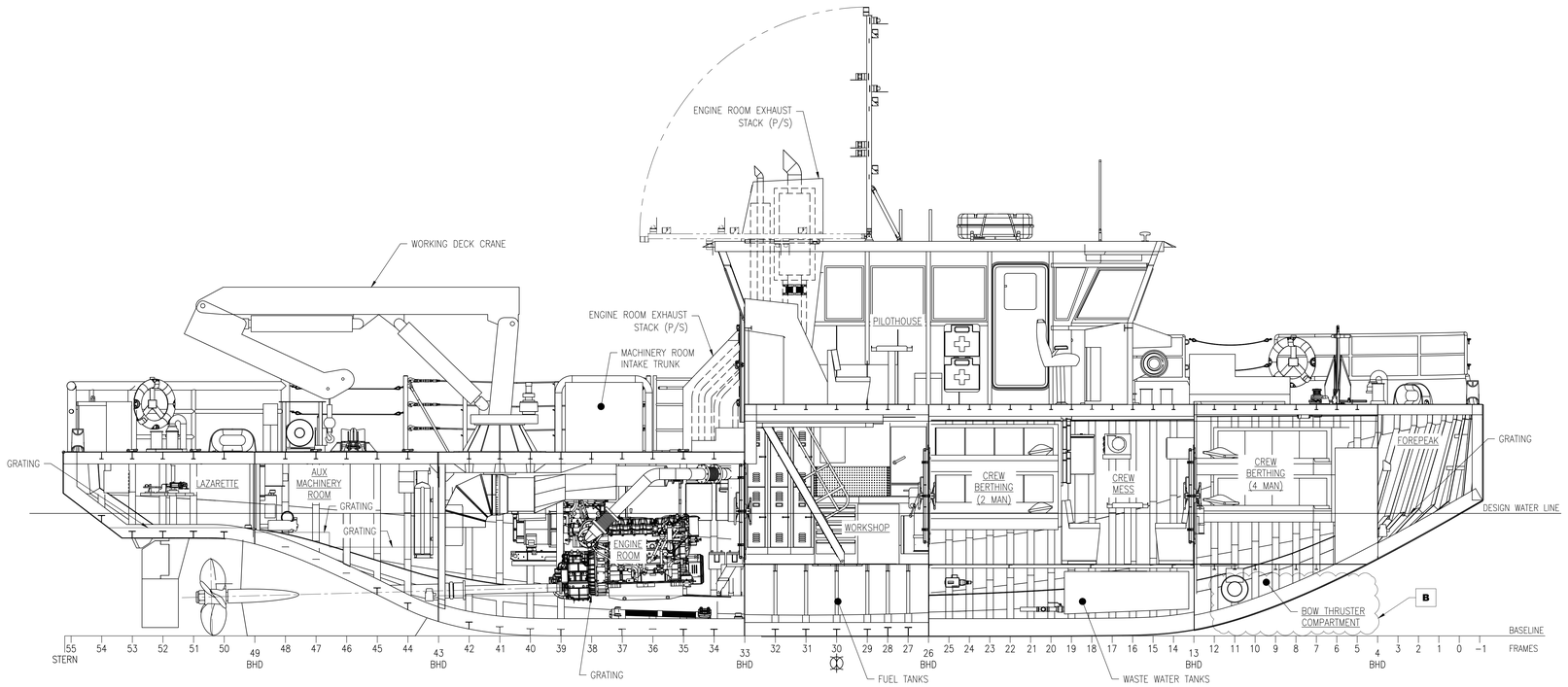

INBOARD PROFILE

SCALE: 3/8"= 1'-0"

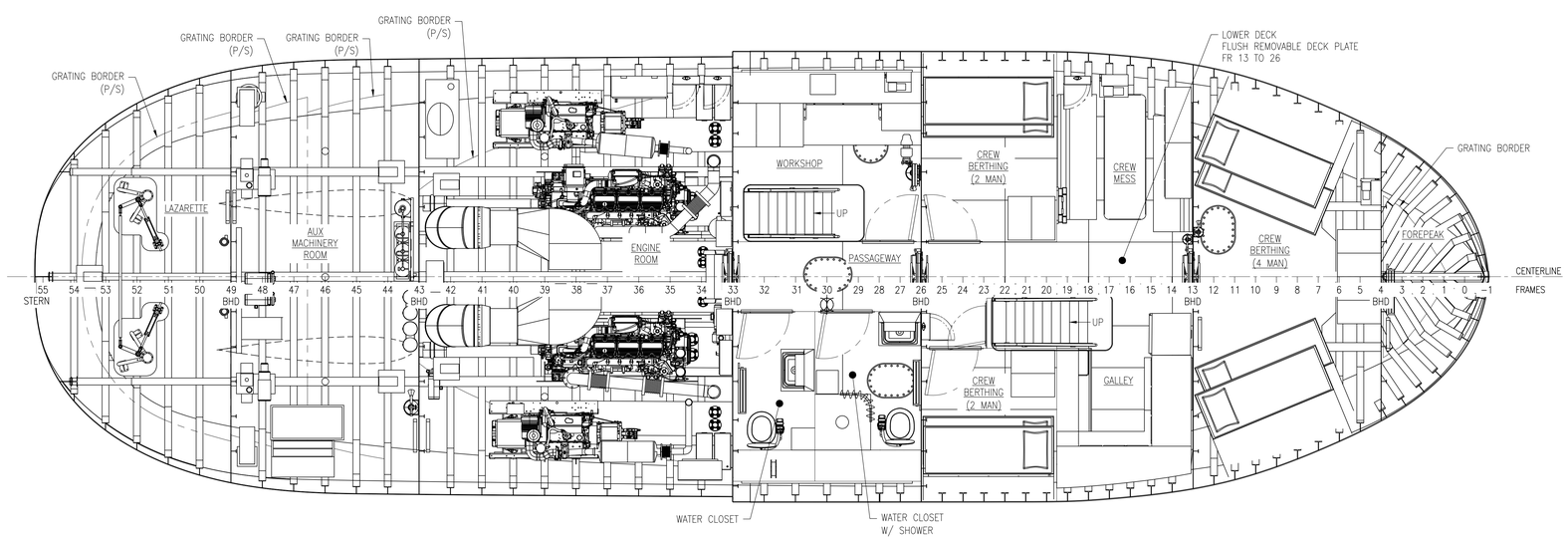

INTERIOR ARRANGEMENT

SCALE: 3/8"= 1'-0"

0 1' 2' 3' 4' 5' 6' 7' 8'

SCALE: 3/8"=1'-0"

HOMELAND SECURITY CUTTER LIGHT
GENERAL ARRANGEMENT
INBOARD PROFILE AND
INTERIOR ARRANGEMENT

SIZE	CAGE CODE	USCG DRAWING NO.	REV
H	81340	69-HSCL-601-001	0
SCALE: 3/8"=1'-0"			SHEET: 3

ELECTRONIC FILE NAME:
69-HSCL_601_001_0 General Arrangement.dwg