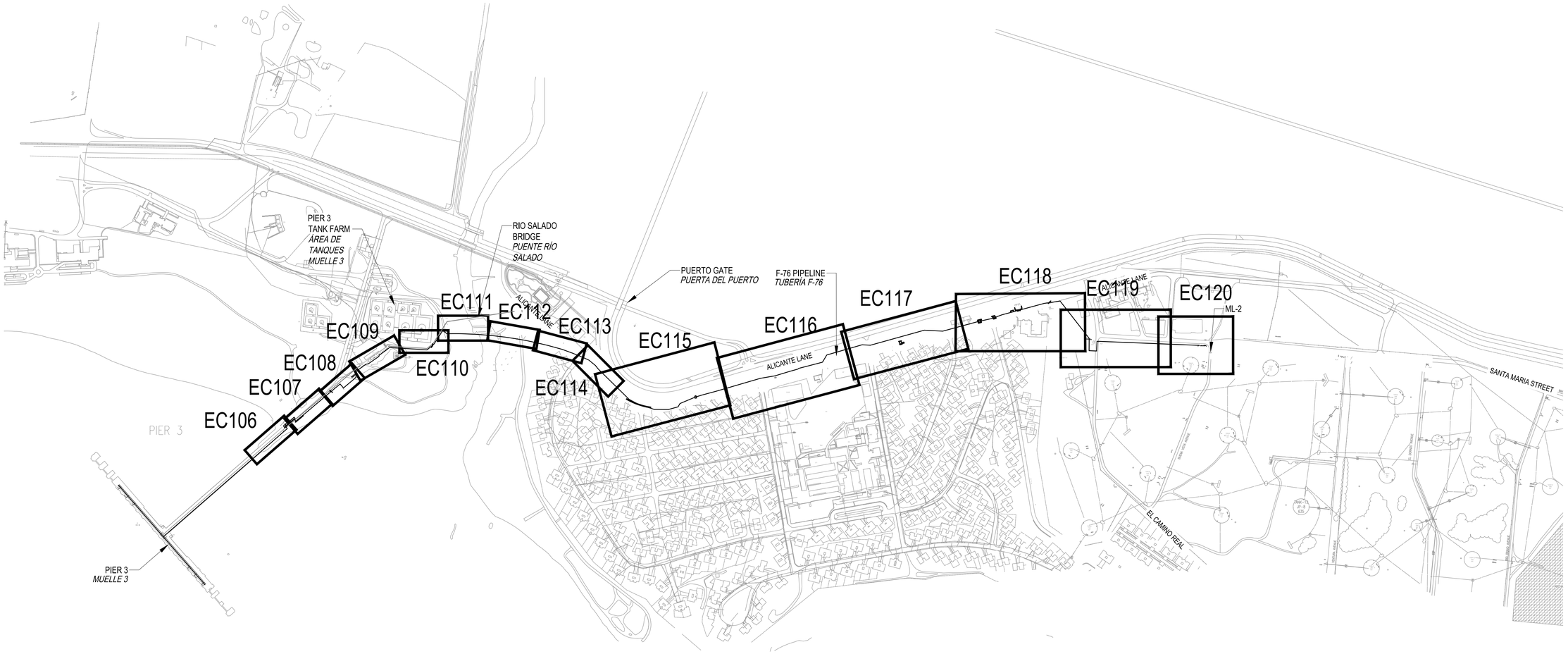

B1 OVERALL JP-5 CATHODIC PROTECTION KEY PLAN
PLANTA GENERAL DE REFERENCIA DE PROTECCIÓN CATÓDICA JP-5
1:5000

N

0 100 200 300 400 500
1:5000

SYM	DESCRIPTION	DATE	APPR

NAVFAC

COLORADO REGISTERED PROFESSIONAL ENGINEER
STANLEY C. WORCESTER
36018
SEAL

Stanley Consultants INC.
225 Iowa Avenue, Muscatine, Iowa 52761-3764
www.stanleyconsultants.com
A/E INFO

APPROVED
FOR COMMANDER NAVFAC
ACTIVITY
SATISFACTORY TO DATE
DES SCW DRN GMR CHK LEI
PM/DM CCA/EJL
BRANCH MANAGER
DESIGN MANAGER
FIRE PROTECTION

DEPARTMENT OF THE NAVY
NAVAL FACILITIES ENGINEERING SYSTEM COMMAND
ATLANTIC DESIGN AND CONSTRUCTION
NAVAL FACILITIES ENGINEERING SYSTEM COMMAND ~ ATLANTIC
NORFOLK, VA
NAVAL STATION ROTA
ROTA, SPAIN
REPLACE
FUEL PIPELINE FROM PIER 3 TO BULK STORAGE
CATHODIC PROTECTION KEY PLAN
PLANTA DE REFERENCIA DE PROTECCIÓN CATÓDICA

SCALE: 1:5000
EPROJECT NO.: 1606884
CONSTR. CONTR. NO.
NAVFAC DRAWING NO. 14142831
SHEET 130 OF 149
EC101

NAVFAC METRIC DRAWFORM REVISION: 07 AUGUST 2018

FILE NAME: U:\29314.23\04-CWA\01-SHEETS\UTIL-1606884-E-EC101.dwg LAYOUT NAME: Layout1 PLOTTED: Tuesday, June 25, 2024 - 2:04pm USER: 6450

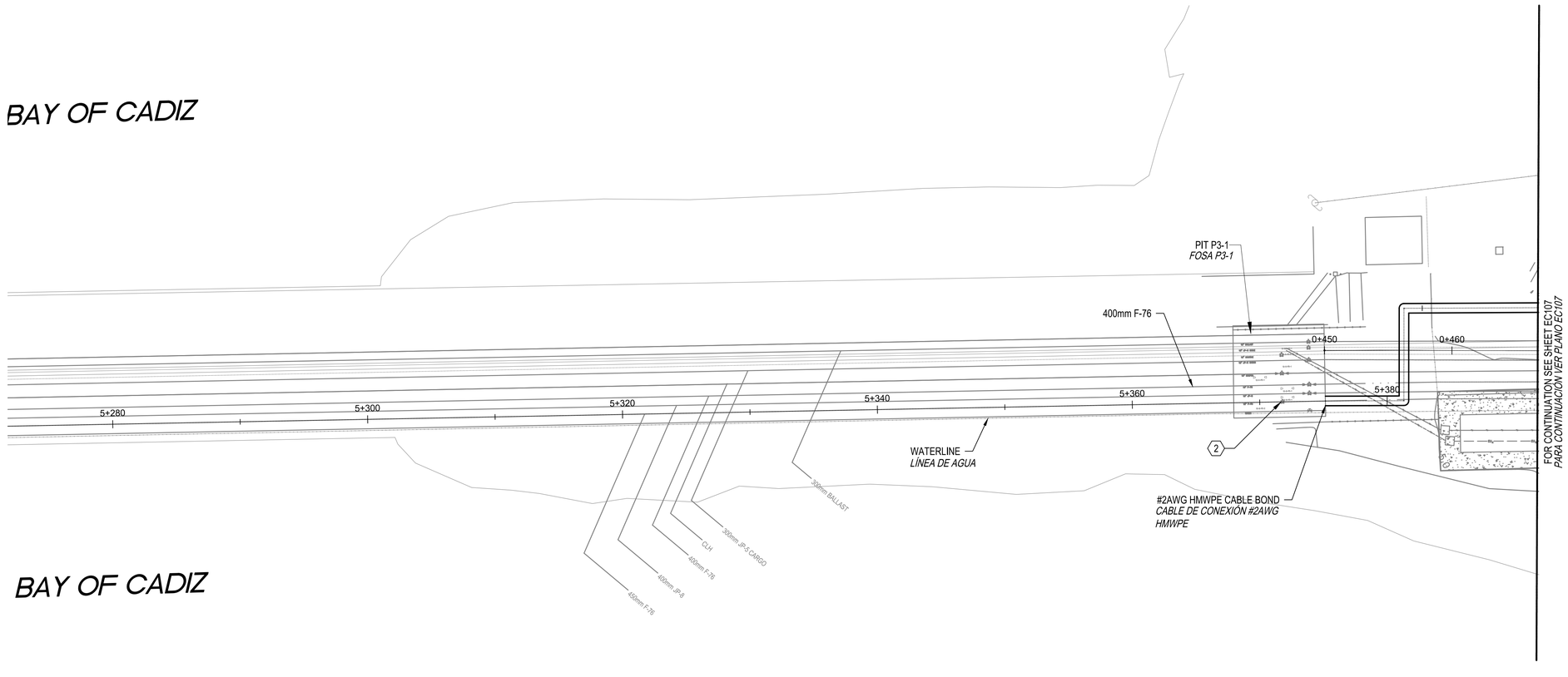

GENERAL NOTES:
NOTAS GENERALES:

1. EACH TEST STATION HAS 0 ANODES CONNECTED.
1. *CADA ESTACIÓN DE PRUEBA TIENE 0 ÁNODOS CONECTADOS.*

B1 CATHODIC PROTECTION PLAN
PLANTA DE PROTECCIÓN CATÓDICA
1:200

KEYED NOTES:
NOTAS DE REFERENCIA:

1. CATHODIC PROTECTION TEST STATION
1. *ESTACIÓN DE PRUEBAS DE PROTECCIÓN CATÓDICA.*
2. INSULATED FLANGE KIT (IFK)
2. *KIT DE BRIDA AISLADA (IFK)*

0 4 8 12 16 20
1:200

SYM	DESCRIPTION	DATE	APPR

NAVFAC

COLORADO REGISTERED PROFESSIONAL ENGINEER STANLEY C. WORCESTER 36018
SEAL

Stanley Consultants INC.
225 Iowa Avenue, Muscatine, Iowa 52761-3764
www.stanleyconsultants.com
A/E INFO

APPROVED
FOR COMMANDER NAVFAC
ACTIVITY
SATISFACTORY TO DATE

DES SCW DRWN GMR CHK LEI
PM/CM CCA/E.IL
BRANCH MANAGER
DESIGN MANAGER
FIRE PROTECTION

DEPARTMENT OF THE NAVY
NAVAL FACILITIES ENGINEERING SYSTEM COMMAND
ATLANTIC DESIGN AND CONSTRUCTION
NAVAL FACILITIES ENGINEERING SYSTEM COMMAND ~ ATLANTIC
NORFOLK, VA.
NAVAL STATION ROTA
ROTA, SPAIN
REPLACE
FUEL PIPELINE FROM PIER 3 TO BULK STORAGE
CATHODIC PROTECTION PLAN
PLANTA DE PROTECCIÓN CATÓDICA

SCALE: 1:200
EPROJECT NO.: 1606884
CONSTR. CONTR. NO.
NAVFAC DRAWING NO.: 14142832
SHEET 131 OF 149
EC106

NAVFAC METRIC DRAWFORM REVISION: 07 AUGUST 2018

FILE NAME: U:\20314.23\04-CIVIL\01-SHEETS\UTIL-1606884-E-EC106.dwg LAYOUT NAME: EC106 PLOTTED: Tuesday, June 25, 2024 - 2:05pm USER: 6450

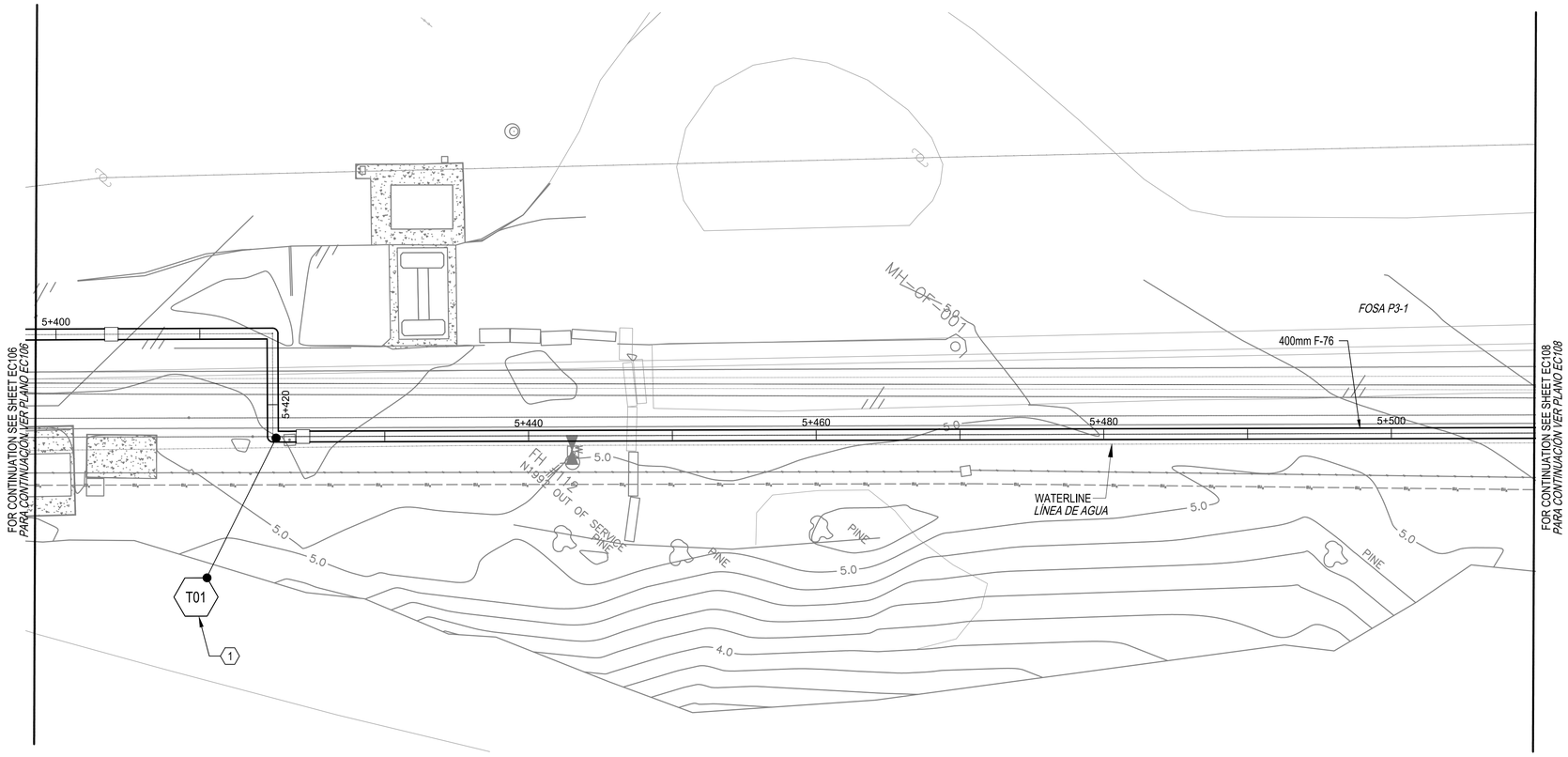

GENERAL NOTES:
NOTAS GENERALES:

1. EACH TEST STATION HAS 0 ANODES CONNECTED.
1. CADA ESTACIÓN DE PRUEBA TIENE 0 ÁNODOS CONECTADOS.

B1 CATHODIC PROTECTION PLAN
PLANTA DE PROTECCIÓN CATÓDICA
1:200

KEYED NOTES:
NOTAS DE REFERENCIA:

1. CATHODIC PROTECTION TEST STATION
1. ESTACIÓN DE PRUEBAS DE PROTECCIÓN CATÓDICA.

2. INSULATED FLANGE KIT (IFK)
2. KIT DE BRIDA AISLADA (IFK)

N

0 4 8 12 16 20
1:200

SYM	DESCRIPTION	DATE	APPR

NAVFAC

COLORADO REGISTERED PROFESSIONAL ENGINEER
STANLEY C. WORCESTER
36018
SEAL

Stanley Consultants INC.
225 Iowa Avenue, Muscatine, Iowa 52761-3764
www.stanleyconsultants.com
A/E INFO

APPROVED
FOR COMMANDER NAVFAC
ACTIVITY
SATISFACTORY TO DATE
DES SCW DRW GMR CHK LEI
PM/DM CDA/EJL
BRANCH MANAGER
DESIGN MANAGER
FIRE PROTECTION

DEPARTMENT OF THE NAVY
NAVAL FACILITIES ENGINEERING SYSTEM COMMAND
ATLANTIC DESIGN AND CONSTRUCTION
NAVAL FACILITIES ENGINEERING SYSTEM COMMAND – ATLANTIC
NORFOLK, VA
NAVAL STATION ROTA
ROTA, SPAIN
REPLACE
FUEL PIPELINE FROM PIER 3 TO BULK STORAGE
CATHODIC PROTECTION PLAN
PLANTA DE PROTECCIÓN CATÓDICA

SCALE: 1:200
EPROJECT NO.: 1606884
CONSTR. CONTR. NO.
NAVFAC DRAWING NO. 14142833
SHEET 132 OF 149
EC107

NAVFAC METRIC DRAWFORM REVISION: 07 AUGUST 2018

FILE NAME: U:\29314.23\04-CIVIL\01-SHEETS\UTIL-1606884-E-EC107.dwg LAYOUT NAME: EC107 PLOTTED: Tuesday, June 25, 2024 - 2:06pm USER: 6450

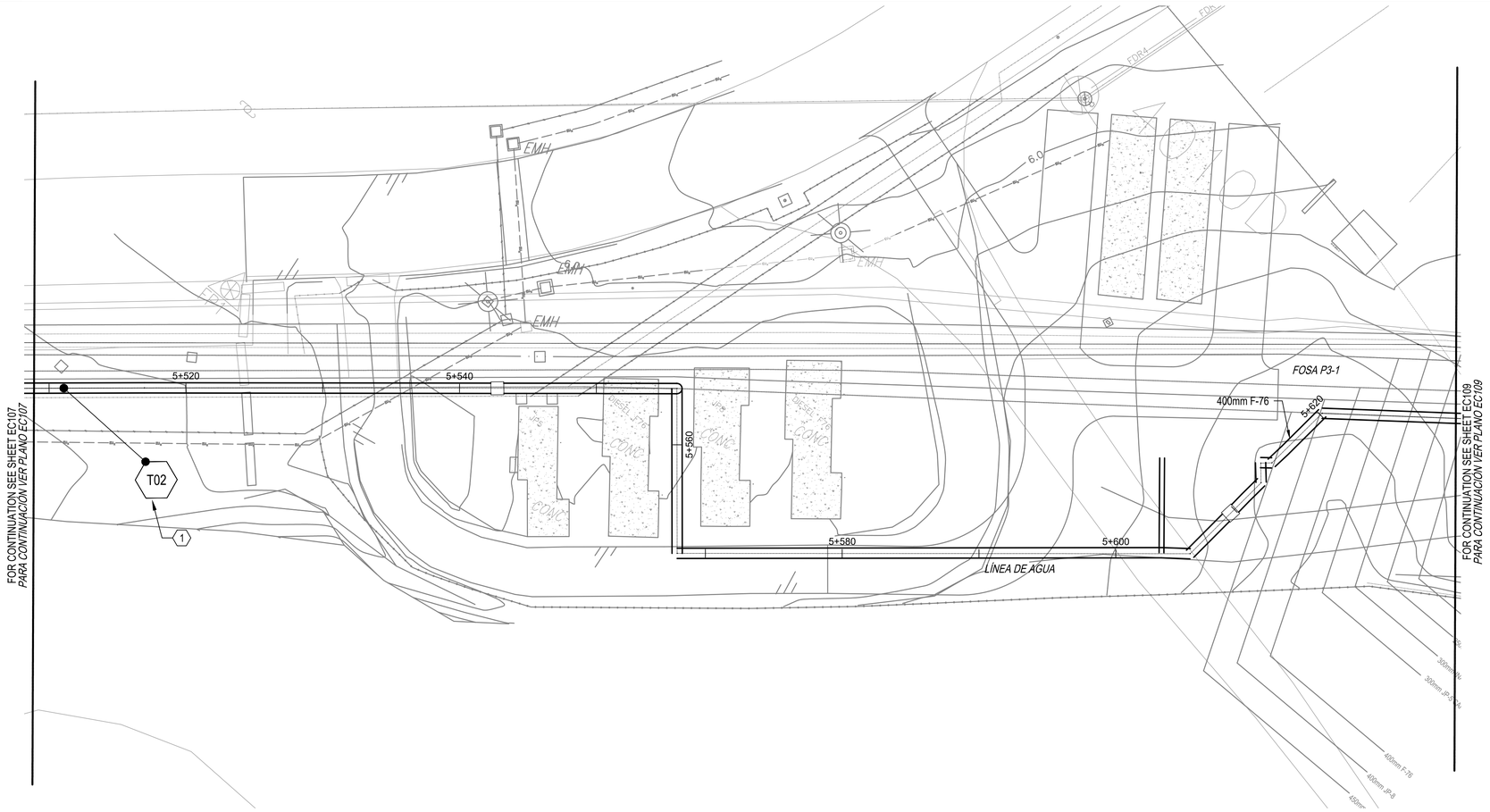

GENERAL NOTES:
NOTAS GENERALES:

1. EACH TEST STATION HAS 0 ANODES CONNECTED.
1. *CADA ESTACIÓN DE PRUEBA TIENE 0 ÁNODOS CONECTADOS.*

B1 CATHODIC PROTECTION PLAN
PLANTA DE PROTECCIÓN CATÓDICA
1:200

KEYED NOTES:
NOTAS DE REFERENCIA:

1. CATHODIC PROTECTION TEST STATION
1. *ESTACIÓN DE PRUEBAS DE PROTECCIÓN CATÓDICA.*
2. INSULATED FLANGE KIT (IFK)
2. *KIT DE BRIDA AISLADA (IFK)*

0 4 8 12 16 20
1:200

SYM	DESCRIPTION	DATE	APPR

NAVFAC

COLORADO REGISTERED PROFESSIONAL ENGINEER
STANLEY C. WORCESTER
36018

SEAL

Stanley Consultants INC.
225 Iowa Avenue, Muscatine, Iowa 52761-3764
www.stanleyconsultants.com
A/E INFO

APPROVED
FOR COMMANDER NAVFAC
ACTIVITY
SATISFACTORY TO DATE

DES. SCW DRW GMR CHK LEI
PM/DM CCA/EJL
BRANCH MANAGER
DESIGN MANAGER
FIRE PROTECTION

DEPARTMENT OF THE NAVY
NAVAL FACILITIES ENGINEERING SYSTEM COMMAND
ATLANTIC DESIGN AND CONSTRUCTION

NAVAL FACILITIES ENGINEERING SYSTEM COMMAND ~ ATLANTIC
NORFOLK, VA.

NAVAL STATION ROTA — ROTA, SPAIN

REPLACE
FUEL PIPELINE FROM PIER 3 TO BULK STORAGE

CATHODIC PROTECTION PLAN
PLANTA DE PROTECCIÓN CATÓDICA

SCALE: 1:200
EPROJECT NO.: 1606884
CONSTR. CONTR. NO.
NAVFAC DRAWING NO. 14142834
SHEET 133 OF 149

EC108

NAVFAC METRIC DRAWFORM REVISION: 07 AUGUST 2018

FILE NAME: U:\20314.23\04-CIVIL\01-SHEETS\UTIL-1606884-E-EC108.dwg LAYOUT NAME: EC108 PLOTTED: Tuesday, June 25, 2024 - 2:07pm USER: 6450

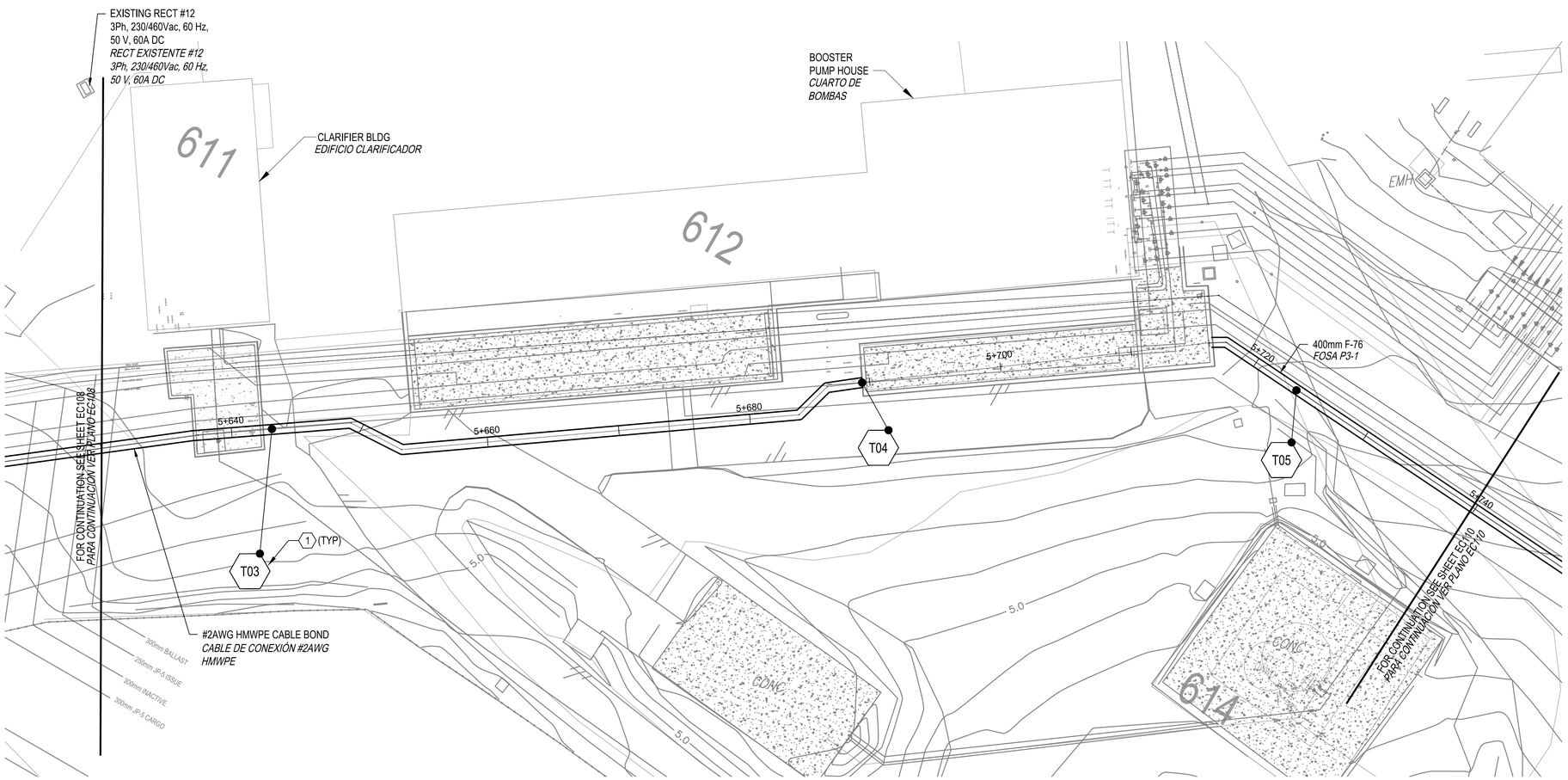

GENERAL NOTES:
NOTAS GENERALES:

1. EACH TEST STATION HAS 0 ANODES CONNECTED.
1. *CADA ESTACIÓN DE PRUEBA TIENE 0 ÁNODOS CONECTADOS.*

B1 CATHODIC PROTECTION PLAN
PLANTA DE PROTECCIÓN CATÓDICA
1:200

KEYED NOTES:
NOTAS DE REFERENCIA:

1. CATHODIC PROTECTION TEST STATION
1. *ESTACIÓN DE PRUEBAS DE PROTECCIÓN CATÓDICA.*

2. INSULATED FLANGE KIT (IFK)
2. *KIT DE BRIDA AISLADA (IFK)*

0 4 8 12 16 20
1:200

SYM	DESCRIPTION	DATE	APPR

NAVFAC

COLORADO REGISTERED PROFESSIONAL ENGINEER
STANLEY C. WORCESTER
36018
SEAL

Stanley Consultants INC.
225 Iowa Avenue, Muscatine, Iowa 52761-3764
www.stanleyconsultants.com
A/E INFO

APPROVED
FOR COMMANDER NAVFAC
ACTIVITY
SATISFACTORY TO DATE
DES. SCW DRW. GMR CHK. LEI
PM/CM CDA/E.I.
BRANCH MANAGER
DESIGN MANAGER
FIRE PROTECTION

DEPARTMENT OF THE NAVY
NAVAL FACILITIES ENGINEERING SYSTEM COMMAND
ATLANTIC DESIGN AND CONSTRUCTION
NAVAL FACILITIES ENGINEERING SYSTEM COMMAND ~ ATLANTIC
NORFOLK, VA
NAVAL STATION ROTA
ROTA, SPAIN
REPLACE
FUEL PIPELINE FROM PIER 3 TO BULK STORAGE
CATHODIC PROTECTION PLAN
PLANTA DE PROTECCIÓN CATÓDICA

SCALE: 1:200
EPROJECT NO.: 1606884
CONSTR. CONTR. NO.
NAVFAC DRAWING NO. 14142835
SHEET 134 OF 149
EC109

NAVFAC METRIC DRAWFORM REVISION: 07 AUGUST 2018

FILE NAME: U:\20314.23\04-CIVIL\01-SHEETS\UTIL-1606884-E-EC109.dwg LAYOUT NAME: EC109 PLOTTED: Tuesday, June 25, 2024 - 2:08pm USER: 6450

GENERAL NOTES:
NOTAS GENERALES:

1. EACH TEST STATION HAS 0 ANODES CONNECTED.
1. *CADA ESTACIÓN DE PRUEBA TIENE 0 ÁNODOS CONECTADOS.*

B1 CATHODIC PROTECTION PLAN
PLANTA DE PROTECCIÓN CATÓDICA
1:200

KEYED NOTES:
NOTAS DE REFERENCIA:

1. CATHODIC PROTECTION TEST STATION
1. *ESTACIÓN DE PRUEBAS DE PROTECCIÓN CATÓDICA.*
2. INSULATED FLANGE KIT (IFK)
2. *KIT DE BRIDA AISLADA (IFK)*

N

0 4 8 12 16 20
1:200

SYM	DESCRIPTION	DATE	APPR

NAVFAC

COLORADO REGISTERED PROFESSIONAL ENGINEER
STANLEY C. WORCESTER
36018
SEAL

Stanley Consultants INC.
225 Iowa Avenue, Muscatine, Iowa 52761-3764
www.stanleyconsultants.com
A/E INFO

APPROVED
FOR COMMANDER NAVFAC
ACTIVITY
SATISFACTORY TO DATE

DES SCW DRW GMR CHK LEI
PM/DM CDA/EJL
BRANCH MANAGER
DESIGN MANAGER
FIRE PROTECTION

DEPARTMENT OF THE NAVY
NAVAL FACILITIES ENGINEERING SYSTEM COMMAND
ATLANTIC DESIGN AND CONSTRUCTION
NAVAL FACILITIES ENGINEERING COMMAND – ATLANTIC
NORFOLK, VA
NAVAL STATION ROTA
ROTA, SPAIN

REPLACE
FUEL PIPELINE FROM PIER 3 TO BULK STORAGE

CATHODIC PROTECTION PLAN
PLANTA DE PROTECCIÓN CATÓDICA

SCALE: 1:200
EPROJECT NO.: 1606884
CONSTR. CONTR. NO.
NAVFAC DRAWING NO. 14142836
SHEET 135 OF 149
EC110

NAVFAC METRIC DRAWFORM REVISION: 07 AUGUST 2018

FILE NAME: U:\293114.23\04-CIVIL\01-SHEETS\UTIL-1606884-E-EC110.dwg LAYOUT NAME: EC110 PLOTTED: Tuesday, June 25, 2024 - 2:10pm USER: 6450

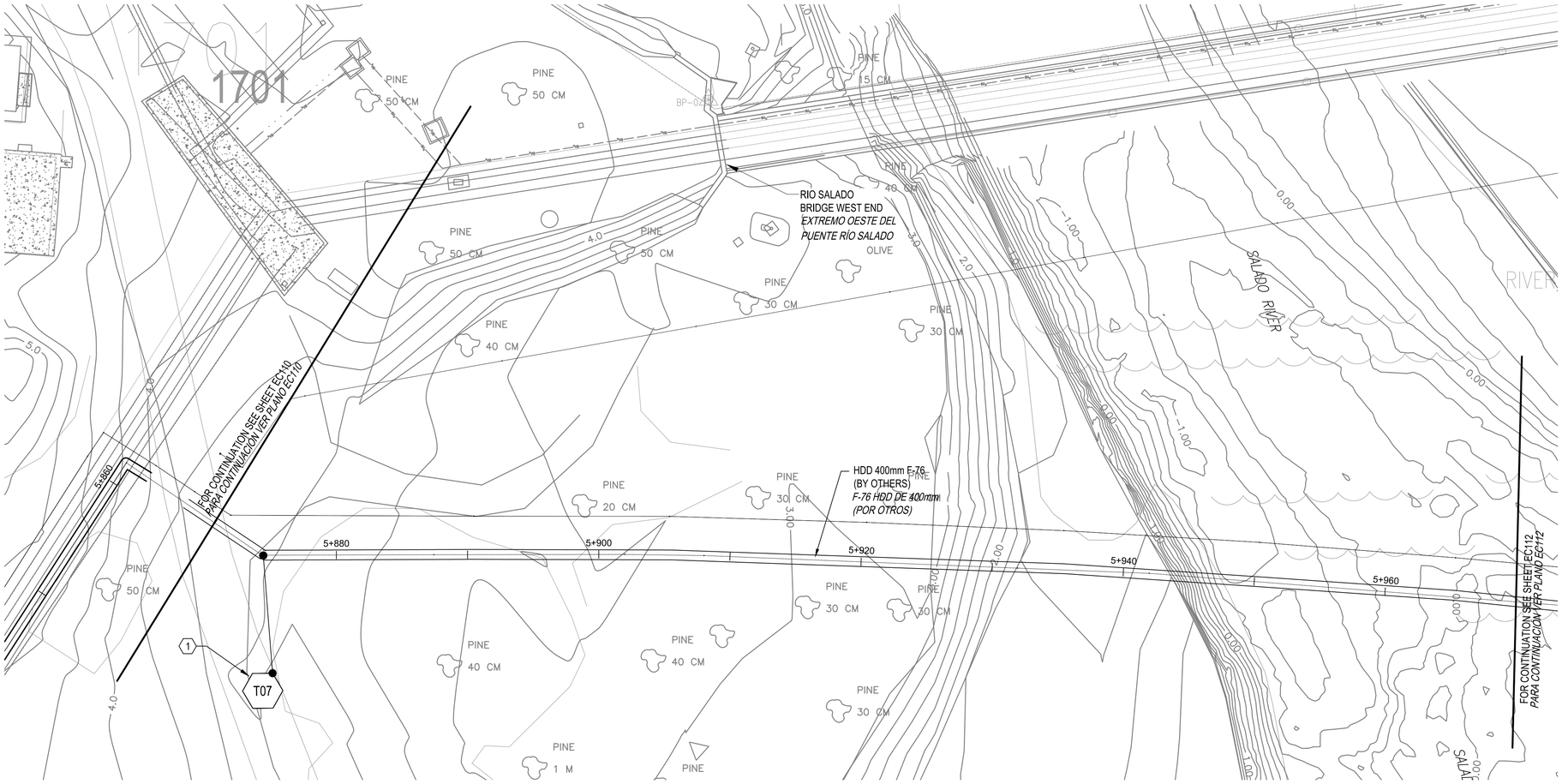

GENERAL NOTES:
NOTAS GENERALES:

1. EACH TEST STATION HAS 0 ANODES CONNECTED.
1. *CADA ESTACIÓN DE PRUEBA TIENE 0 ÁNODOS CONECTADOS.*

B1 CATHODIC PROTECTION PLAN
PLANTA DE PROTECCIÓN CATÓDICA
1:200

KEYED NOTES:
NOTAS DE REFERENCIA:

1. CATHODIC PROTECTION TEST STATION
1. *ESTACIÓN DE PRUEBAS DE PROTECCIÓN CATÓDICA.*
2. INSULATED FLANGE KIT (IFK)
2. *KIT DE BRIDA AISLADA (IFK)*

N

0 4 8 12 16 20
1:200

SYM	DESCRIPTION	DATE	APPR

NAVFAC

COLORADO REGISTERED PROFESSIONAL ENGINEER
STANLEY C. WORCESTER
36018
SEAL

Stanley Consultants INC.
225 Iowa Avenue, Muscatine, Iowa 52761-3764
www.stanleyconsultants.com
A/E INFO

APPROVED
FOR COMMANDER NAVFAC
ACTIVITY
SATISFACTORY TO DATE
DES SCW DRW GMR CHK LEI
PM/DM CCA/ELR
BRANCH MANAGER
DESIGN MANAGER
FIRE PROTECTION

DEPARTMENT OF THE NAVY
NAVAL FACILITIES ENGINEERING SYSTEM COMMAND
ATLANTIC DESIGN AND CONSTRUCTION
NAVAL FACILITIES ENGINEERING SYSTEM COMMAND ~ ATLANTIC
NORFOLK, VA
NAVAL STATION ROTA
ROTA, SPAIN
REPLACE
FUEL PIPELINE FROM PIER 3 TO BULK STORAGE
CATHODIC PROTECTION PLAN
PLANTA DE PROTECCIÓN CATÓDICA

SCALE: 1:200
EPROJECT NO.: 1606884
CONSTR. CONTR. NO.
NAVFAC DRAWING NO. 14142837
SHEET 136 OF 149
EC111

NAVFAC METRIC DRAWFORM REVISION: 07 AUGUST 2018

FILE NAME: U:\28314.23\04-CONL\01-SHEETS\UTIL-1606884-E-EC111.dwg LAYOUT NAME: EC111 PLOTTED: Tuesday, June 25, 2024 - 2:11pm USER: 6450

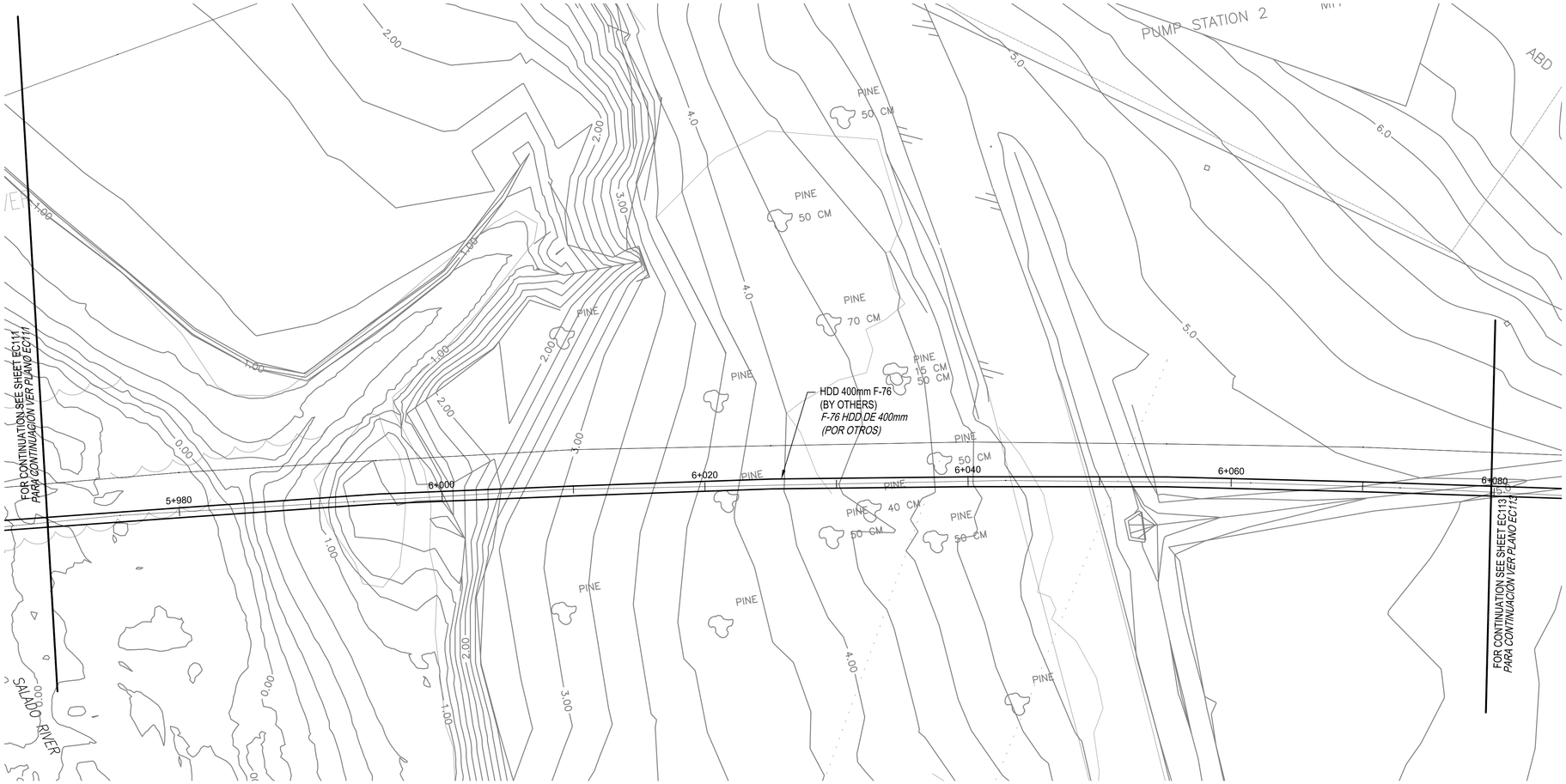

GENERAL NOTES:
NOTAS GENERALES:

1. EACH TEST STATION HAS 0 ANODES CONNECTED.
1. *CADA ESTACIÓN DE PRUEBA TIENE 0 ÁNODOS CONECTADOS.*

B1 CATHODIC PROTECTION PLAN
PLANTA DE PROTECCIÓN CATÓDICA
1:200

KEYED NOTES:
NOTAS DE REFERENCIA:

1. CATHODIC PROTECTION TEST STATION
1. *ESTACIÓN DE PRUEBAS DE PROTECCIÓN CATÓDICA.*
2. INSULATED FLANGE KIT (IFK)
2. *KIT DE BRIDA AISLADA (IFK)*

N

0 4 8 12 16 20
1:200

SYM	DESCRIPTION	DATE	APPR

NAVFAC

COLORADO REGISTERED PROFESSIONAL ENGINEER
STANLEY C. WORCESTER
36018
SEAL

Stanley Consultants INC.
225 Iowa Avenue, Muscatine, Iowa 52761-3764
www.stanleyconsultants.com
A/E INFO

APPROVED
FOR COMMANDER NAVFAC
ACTIVITY
SATISFACTORY TO DATE

DES SCW DRW GMR CHK LEI
PM/DM CCA/EJL
BRANCH MANAGER
DESIGN MANAGER
FIRE PROTECTION

DEPARTMENT OF THE NAVY
NAVAL FACILITIES ENGINEERING SYSTEM COMMAND
ATLANTIC DESIGN AND CONSTRUCTION
NAVAL FACILITIES ENGINEERING SYSTEM COMMAND – ATLANTIC
NORFOLK, VA
NAVAL STATION ROTA
ROTA, SPAIN

REPLACE
FUEL PIPELINE FROM PIER 3 TO BULK STORAGE

CATHODIC PROTECTION PLAN
PLANTA DE PROTECCIÓN CATÓDICA

SCALE: 1:200
EPROJECT NO.: 1606884
CONSTR. CONTR. NO.
NAVFAC DRAWING NO. 14142838
SHEET 137 OF 149

EC112

NAVFAC METRIC DRAWFORM REVISION: 07 AUGUST 2018

FILE NAME: U:\293142374\04-CIVIL\01-SHEETS\UTIL-1606884-E-EC112.dwg LAYOUT NAME: EC112 PLOTTED: Tuesday, June 25, 2024 - 2:12pm USER: 6450

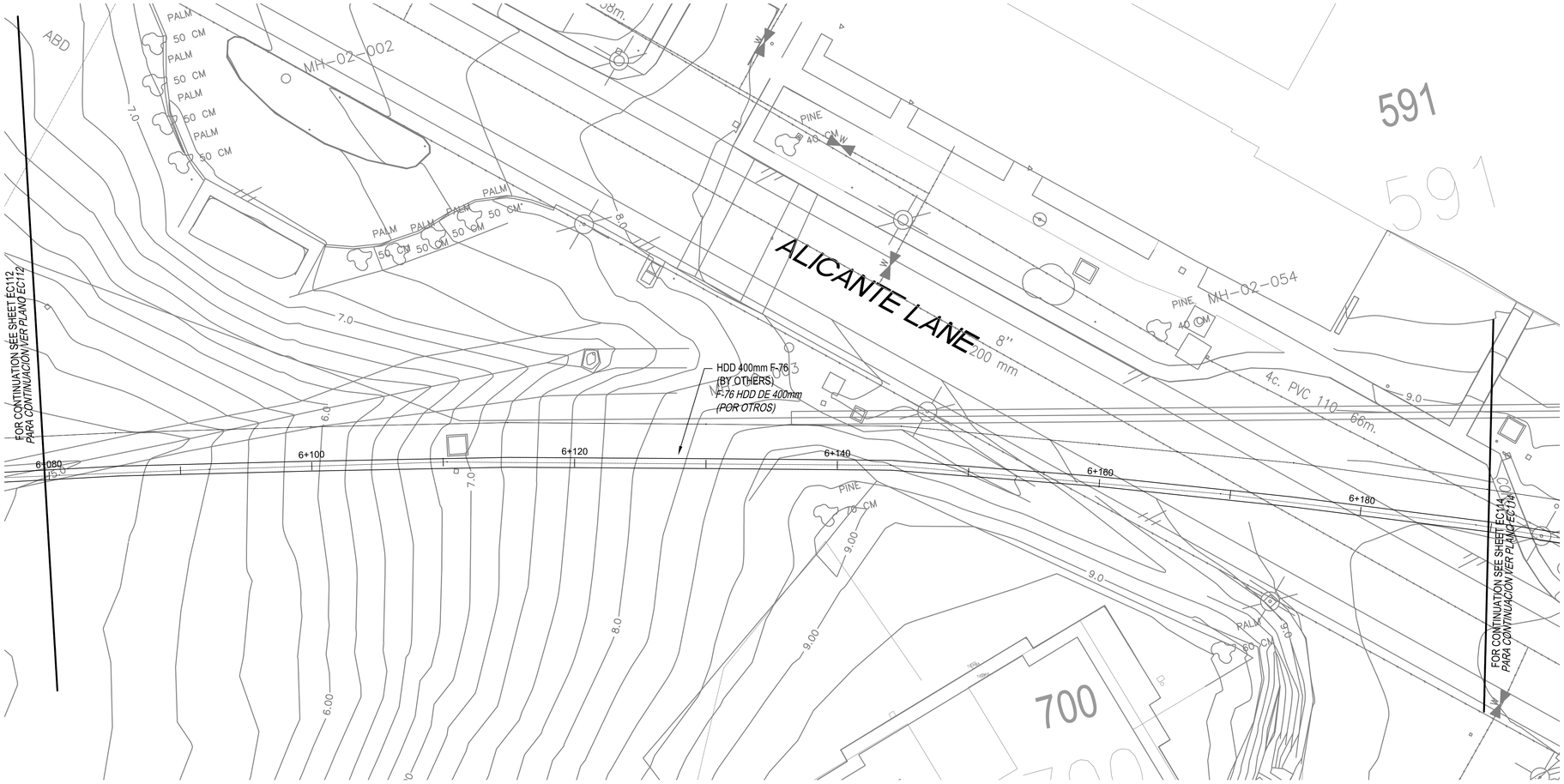

GENERAL NOTES:
NOTAS GENERALES:

1. EACH TEST STATION HAS 0 ANODES CONNECTED.
1. *CADA ESTACIÓN DE PRUEBA TIENE 0 ÁNODOS CONECTADOS.*

B1 CATHODIC PROTECTION PLAN
PLANTA DE PROTECCIÓN CATÓDICA
1:200

KEYED NOTES:
NOTAS DE REFERENCIA:

1. CATHODIC PROTECTION TEST STATION
1. *ESTACIÓN DE PRUEBAS DE PROTECCIÓN CATÓDICA.*
2. INSULATED FLANGE KIT (IFK)
2. *KIT DE BRIDA AISLADA (IFK)*

N

0 4 8 12 16 20
1:200

SYM	DESCRIPTION	DATE	APPR

NAVFAC

COLORADO REGISTERED PROFESSIONAL ENGINEER
STANLEY C. WORCESTER
36018
SEAL

Stanley Consultants INC.
225 Iowa Avenue, Muscatine, Iowa 52761-3764
www.stanleyconsultants.com
A/E INFO

APPROVED
FOR COMMANDER NAVFAC
ACTIVITY
SATISFACTORY TO DATE
DES SCW DRW GMR CHK LEI
PM/DM CCA/EJL
BRANCH MANAGER
DESIGN MANAGER
FIRE PROTECTION

DEPARTMENT OF THE NAVY
NAVAL FACILITIES ENGINEERING SYSTEM COMMAND
ATLANTIC DESIGN AND CONSTRUCTION
NAVAL FACILITIES ENGINEERING SYSTEM COMMAND – ATLANTIC
NORFOLK, VA
NAVAL STATION ROTA
ROTA, SPAIN
REPLACE
FUEL PIPELINE FROM PIER 3 TO BULK STORAGE
CATHODIC PROTECTION PLAN
PLANTA DE PROTECCIÓN CATÓDICA

SCALE: 1:200
EPROJECT NO.: 1606884
CONSTR. CONTR. NO.:
NAVFAC DRAWING NO. 14142839
SHEET 138 OF 149
EC113

NAVFAC METRIC DRAWFORM REVISION: 07 AUGUST 2018

FILE NAME: U:\20314.23\04-CIVIL\01-SHEETS\UTIL-1606884-E-EC113.dwg LAYOUT NAME: EC113 PLOTTED: Tuesday, June 25, 2024 - 2:12pm USER: 6450

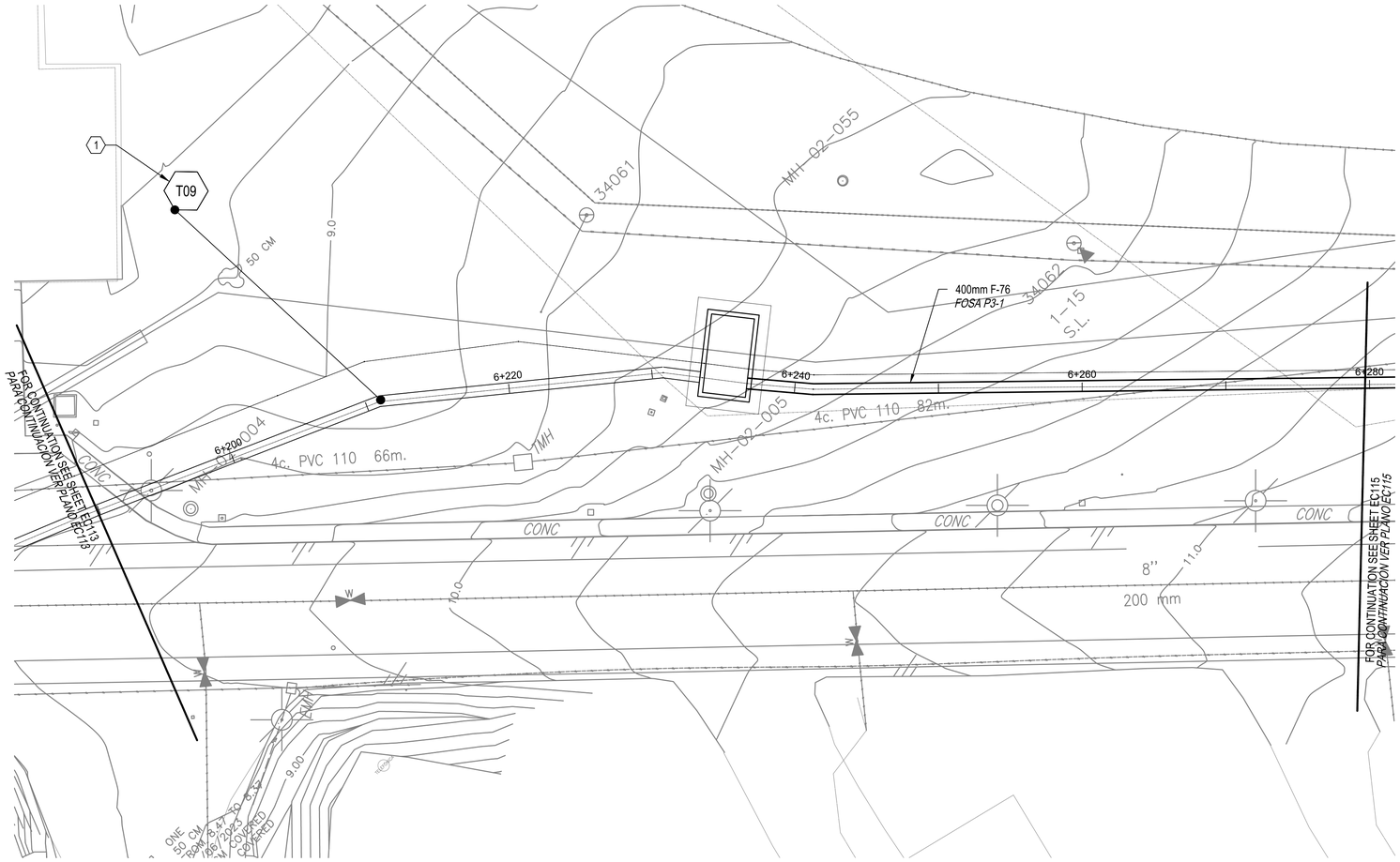

GENERAL NOTES:
NOTAS GENERALES:

1. EACH TEST STATION HAS 0 ANODES CONNECTED.
1. *CADA ESTACIÓN DE PRUEBA TIENE 0 ÁNODOS CONECTADOS.*

B1 CATHODIC PROTECTION PLAN
PLANTA DE PROTECCIÓN CATÓDICA
1:200

KEYED NOTES:
NOTAS DE REFERENCIA:

1. CATHODIC PROTECTION TEST STATION
1. *ESTACIÓN DE PRUEBAS DE PROTECCIÓN CATÓDICA.*
2. INSULATED FLANGE KIT (IFK)
2. *KIT DE BRIDA AISLADA (IFK)*

N

0 4 8 12 16 20
1:200

SYM	DESCRIPTION	DATE	APPR

NAVFAC

COLORADO REGISTERED PROFESSIONAL ENGINEER
STANLEY C. WORCESTER
36018
SEAL

Stanley Consultants INC.
225 Iowa Avenue, Muscatine, Iowa 52761-3764
www.stanleyconsultants.com
A/E INFO

APPROVED
FOR COMMANDER NAVFAC
ACTIVITY
SATISFACTORY TO DATE

DES SCW DRW GMR CHK LEI
PM/DM CCA/E.IL
BRANCH MANAGER
DESIGN MANAGER
FIRE PROTECTION

DEPARTMENT OF THE NAVY
NAVAL FACILITIES ENGINEERING SYSTEM COMMAND
ATLANTIC DESIGN AND CONSTRUCTION

NAVAL FACILITIES ENGINEERING SYSTEM COMMAND – ATLANTIC
NORFOLK, VA

NAVAL STATION ROTA
ROTA, SPAIN

REPLACE
FUEL PIPELINE FROM PIER 3 TO BULK STORAGE

CATHODIC PROTECTION PLAN
PLANTA DE PROTECCIÓN CATÓDICA

SCALE: 1:200
EPROJECT NO.: 1606884
CONSTR. CONTR. NO.:
NAVFAC DRAWING NO. 14142840
SHEET 139 OF 149
EC114

NAVFAC METRIC DRAWFORM REVISION: 07 AUGUST 2018

FILE NAME: U:\293142.23\04-CIVIL\01-SHEETS\UTIL-1606884-E-EC114.dwg LAYOUT NAME: EC114 PLOTTED: Tuesday, June 25, 2024 - 2:13pm USER: 6450

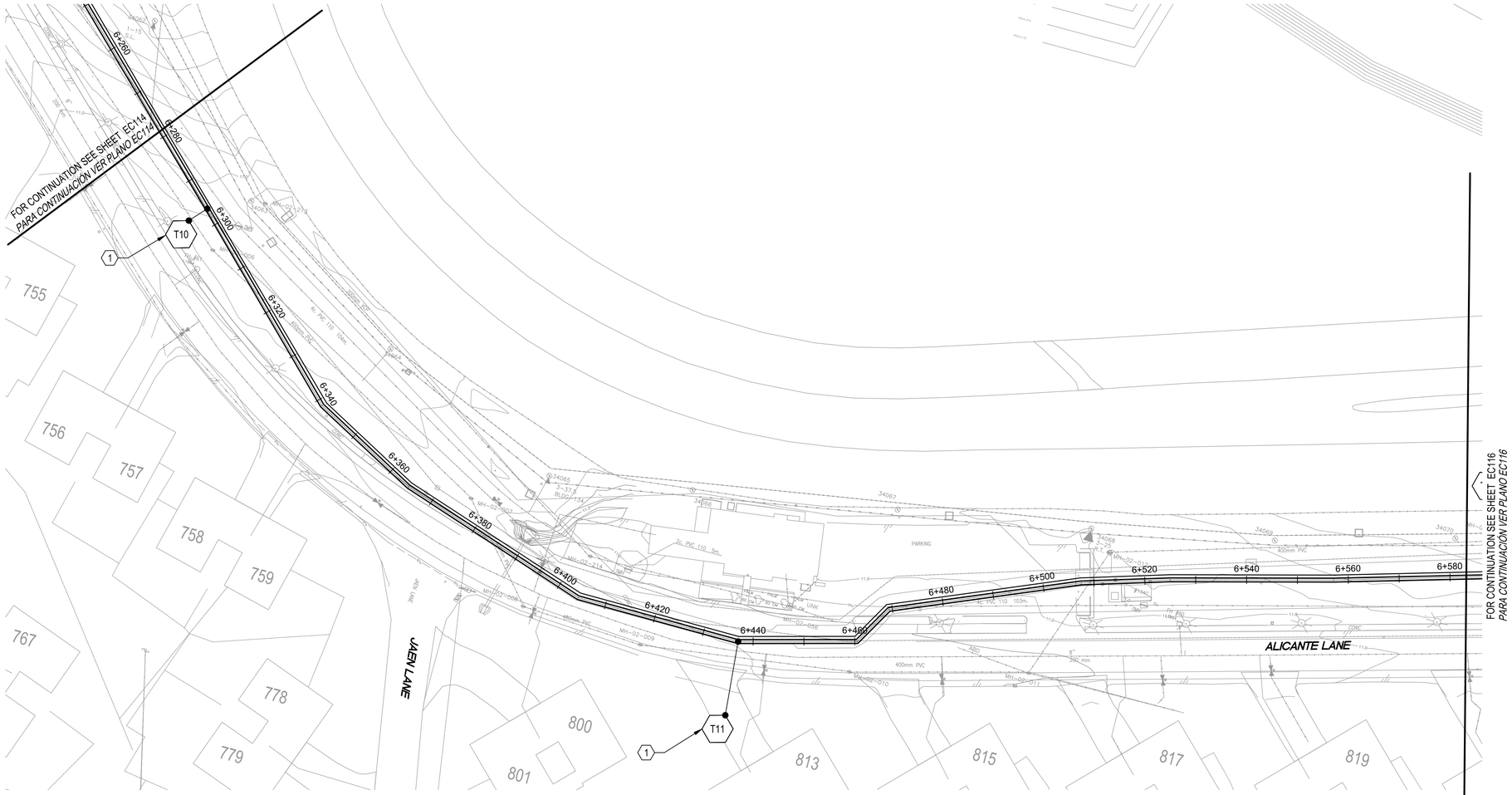

GENERAL NOTES:
NOTAS GENERALES:

1. EACH TEST STATION HAS 0 ANODES CONNECTED.
1. CADA ESTACIÓN DE PRUEBA TIENE 0 ÁNODOS CONECTADOS.

B1 CATHODIC PROTECTION PLAN
PLANTA DE PROTECCIÓN CATÓDICA
1:500

KEYED NOTES:
NOTAS DE REFERENCIA:

1. CATHODIC PROTECTION TEST STATION
1. ESTACIÓN DE PRUEBAS DE PROTECCIÓN CATÓDICA.

N

0 10 20 30 40 50
1:500

SYM	DESCRIPTION	DATE	APPR

NAVFAC

COLORADO REGISTERED PROFESSIONAL ENGINEER
STANLEY C. WORCESTER
36018
SEAL

Stanley Consultants INC.
225 Iowa Avenue, Muscatine, Iowa 52761-3764
www.stanleyconsultants.com
A/E INFO

APPROVED
FOR COMMANDER NAVFAC
ACTIVITY
SATISFACTORY TO DATE

DES SCW | DRW GMR | CHK LEI
PM/CM CCA/E.I.C.
BRANCH MANAGER
DESIGN MANAGER
FIRE PROTECTION

DEPARTMENT OF THE NAVY
NAVAL FACILITIES ENGINEERING SYSTEM COMMAND
ATLANTIC DESIGN AND CONSTRUCTION
NAVAL FACILITIES ENGINEERING SYSTEM COMMAND ~ ATLANTIC
NORFOLK, VA.
NAVAL STATION ROTA
ROTA, SPAIN
REPLACE
FUEL PIPELINE FROM PIER 3 TO BULK STORAGE
CATHODIC PROTECTION PLAN
PLANTA DE PROTECCIÓN CATÓDICA

SCALE: 1:500
EPROJECT NO.: 1606884
CONSTR. CONTR. NO.
NAVFAC DRAWING NO.: 14142841
SHEET 140 OF 149
EC115

NAVFAC METRIC DRAWFORM REVISION: 07 AUGUST 2018

FILE NAME: U:\20314.23\04-CIVIL\01-SHEETS\UTIL-1606884-E-EC115.dwg LAYOUT NAME: Layout1 PLOTTED: Tuesday, June 25, 2024 - 2:14pm USER: 6450

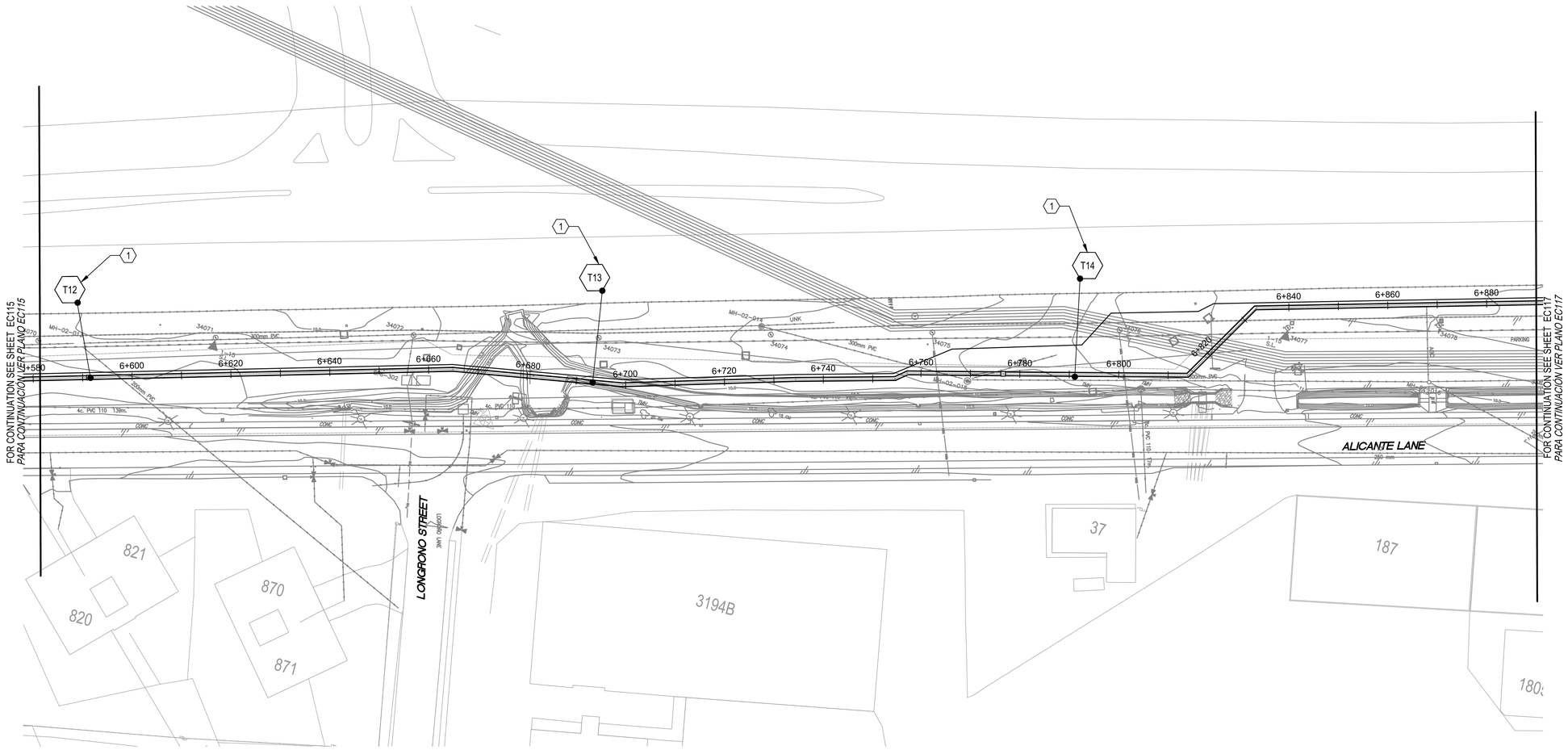

GENERAL NOTES:
NOTAS GENERALES:

1. EACH TEST STATION HAS 0 ANODES CONNECTED.
1. *CADA ESTACIÓN DE PRUEBA TIENE 0 ÁNODOS CONECTADOS.*

B1 CATHODIC PROTECTION PLAN
PLANTA DE PROTECCIÓN CATÓDICA
1:500

KEYED NOTES:
NOTAS DE REFERENCIA:

1. CATHODIC PROTECTION TEST STATION
1. *ESTACIÓN DE PRUEBAS DE PROTECCIÓN CATÓDICA.*

N

0 10 20 30 40 50
1:500

SYM	DESCRIPTION	DATE	APPR

NAVFAC

COLORADO REGISTERED PROFESSIONAL ENGINEER
STANLEY C. WORCESTER
36018
SEAL

Stanley Consultants INC.
225 Iowa Avenue, Muscatine, Iowa 52761-3764
www.stanleyconsultants.com
A/E INFO

APPROVED
FOR COMMANDER NAVFAC
ACTIVITY
SATISFACTORY TO DATE

DES SCW DRN GMR CHK LEI
PM/DM CCA/E.IL
BRANCH MANAGER
DESIGN MANAGER
FIRE PROTECTION

DEPARTMENT OF THE NAVY
NAVAL FACILITIES ENGINEERING SYSTEM COMMAND
ATLANTIC DESIGN AND CONSTRUCTION
NAVAL FACILITIES ENGINEERING SYSTEM COMMAND – ATLANTIC
NORFOLK, VA
NAVAL STATION ROTA
ROTA, SPAIN
REPLACE
FUEL PIPELINE FROM PIER 3 TO BULK STORAGE
CATHODIC PROTECTION PLAN
PLANTA DE PROTECCIÓN CATÓDICA

SCALE: 1:500
EPROJECT NO.: 1606884
CONSTR. CONTR. NO.
NAVFAC DRAWING NO. 14142842
SHEET 141 OF 149
EC116

NAVFAC METRIC DRAWFORM REVISION: 07 AUGUST 2018

FILE NAME: U:\293142.23\04-CIVIL\01-SHEETS\UTIL-1606884-E-EC116.dwg LAYOUT NAME: Layout1 PLOTTED: Tuesday, June 25, 2024 - 2:15pm USER: 6450

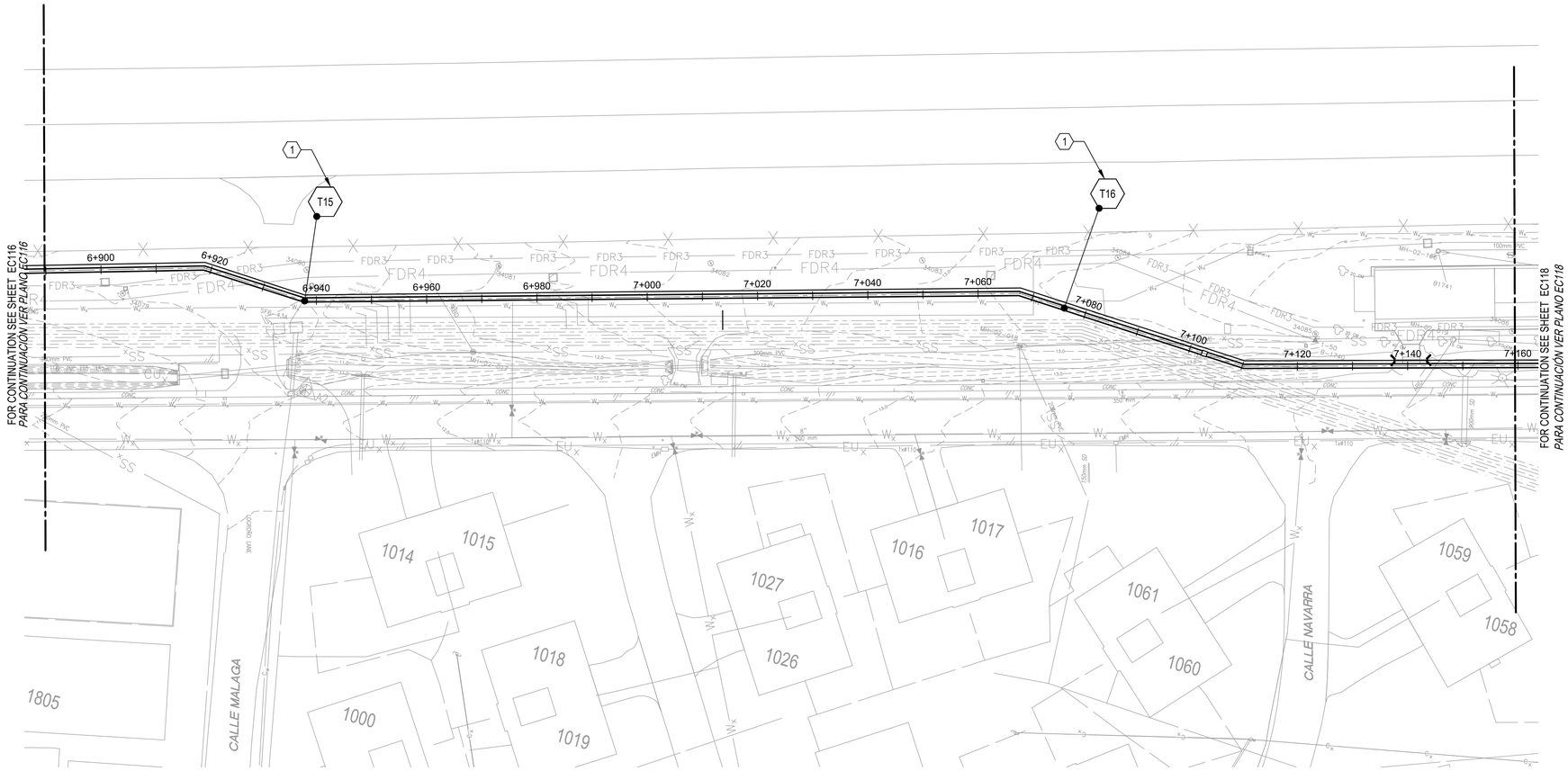

B1 CATHODIC PROTECTION PLAN
PLANTA DE PROTECCIÓN CATÓDICA
1:500

GENERAL NOTES:
NOTAS GENERALES:

1. EACH TEST STATION HAS 0 ANODES CONNECTED.
1. *CADA ESTACIÓN DE PRUEBA TIENE 0 ÁNODOS CONECTADOS.*

KEYED NOTES:
NOTAS DE REFERENCIA:

1. CATHODIC PROTECTION TEST STATION
1. *ESTACIÓN DE PRUEBAS DE PROTECCIÓN CATÓDICA.*
2. CATHODIC PROTECTION RECTIFIER NUMBER XX
2. *RECTIFICADOR DE PROTECCIÓN CATÓDICA NÚMERO XX*

N

0 10 20 30 40 50
1:500

SYM	DESCRIPTION	DATE	APPR

NAVFAC

COLORADO REGISTERED PROFESSIONAL ENGINEER
STANLEY C. WORCESTER
36018
SEAL

Stanley Consultants INC.
225 Iowa Avenue, Muscatine, Iowa 52761-3764
www.stanleyconsultants.com
A/E INFO

APPROVED
FOR COMMANDER NAVFAC
ACTIVITY
SATISFACTORY TO DATE
DES SCW DRW GMR CHK LEI
PM/DM CCA/E,IL
BRANCH MANAGER
DESIGN MANAGER
FIRE PROTECTION

DEPARTMENT OF THE NAVY
NAVAL FACILITIES ENGINEERING SYSTEM COMMAND
ATLANTIC DESIGN AND CONSTRUCTION
NAVAL FACILITIES ENGINEERING SYSTEM COMMAND – ATLANTIC
NORFOLK, VA
NAVAL STATION ROTA
ROTA, SPAIN
REPLACE
FUEL PIPELINE FROM PIER 3 TO BULK STORAGE
CATHODIC PROTECTION PLAN
PLANTA DE PROTECCIÓN CATÓDICA

SCALE: 1:500
EPROJECT NO.: 1606884
CONSTR. CONTR. NO.
NAVFAC DRAWING NO. 14142843
SHEET 142 OF 149
EC117

NAVFAC METRIC DRAWFORM REVISION: 07 AUGUST 2018

FILE NAME: U:\293142.23\04-CIVIL\01-SHEETS\UTIL-1606884-E-EC117.dwg LAYOUT NAME: EC107 PLOTTED: Tuesday, June 25, 2024 - 2:16pm USER: 6450

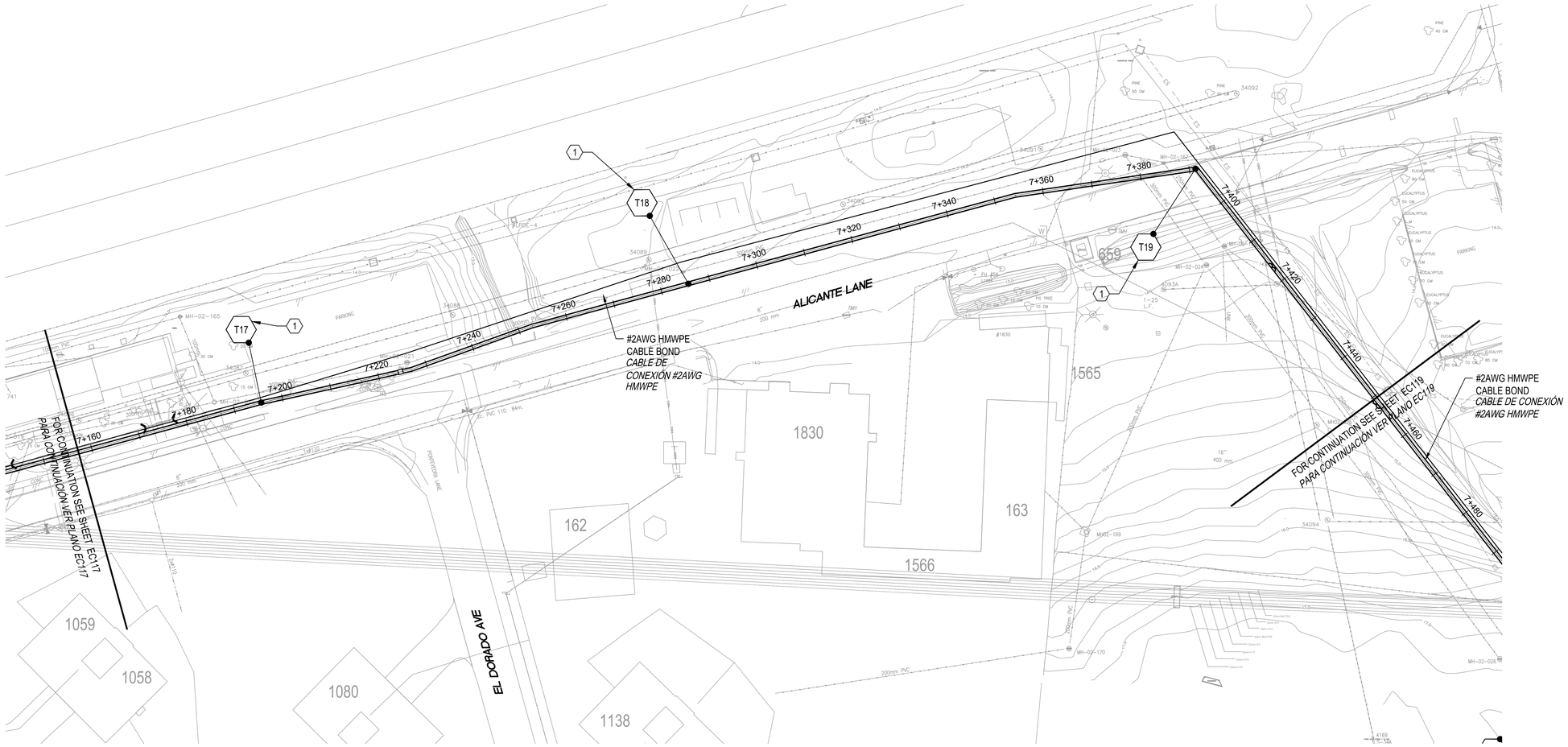

GENERAL NOTES:
NOTAS GENERALES:

1. EACH TEST STATION HAS 0 ANODES CONNECTED.
1. *CADA ESTACIÓN DE PRUEBA TIENE 0 ÁNODOS CONECTADOS.*

B1 CATHODIC PROTECTION PLAN
PLANTA DE PROTECCIÓN CATÓDICA
1:500

KEYED NOTES:
NOTAS DE REFERENCIA:

1. CATHODIC PROTECTION TEST STATION
1. *ESTACIÓN DE PRUEBAS DE PROTECCIÓN CATÓDICA.*

N

0 10 20 30 40 50
1:500

APPR	DATE	DESCRIPTION	NO

NAVFAC

COLORADO REGISTERED PROFESSIONAL ENGINEER
STANLEY C. WORCESTER
36018
SEAL

Stanley Consultants INC.
225 Iowa Avenue, Muscatine, Iowa 52761-3764
www.stanleyconsultants.com
A/E INFO

APPROVED
FOR COMMANDER NAVFAC
ACTIVITY
SATISFACTORY TO DATE
DES SCW DRW CMR CHK LEI
PM/DM CCA/EAL
BRANCH MANAGER
DESIGN MANAGER
FIRE PROTECTION

DEPARTMENT OF THE NAVY
NAVAL FACILITIES ENGINEERING SYSTEM COMMAND
ATLANTIC DESIGN AND CONSTRUCTION
NAVAL FACILITIES ENGINEERING SYSTEM COMMAND ~ ATLANTIC
NORFOLK, VA
NAVAL STATION ROTA
ROTA, SPAIN
REPLACE
FUEL PIPELINE FROM PIER 3 TO BULK STORAGE
CATHODIC PROTECTION PLAN
PLANTA DE PROTECCIÓN CATÓDICA

SCALE: 1:500
EPROJECT NO.: 1606884
CONSTR. CONTR. NO.
NAVFAC DRAWING NO: 14142844
SHEET 143 OF 149
EC118

NAVFAC METRIC DRAWFORM REVISION: 07 AUGUST 2018

FILE NAME: U:\29314.23\04-CWA\01-SHEETS\UTIL-1606884-E-EC118.dwg LAYOUT NAME: ec118 PLOTTED: Tuesday, June 25, 2024 - 2:17pm USER: 6450

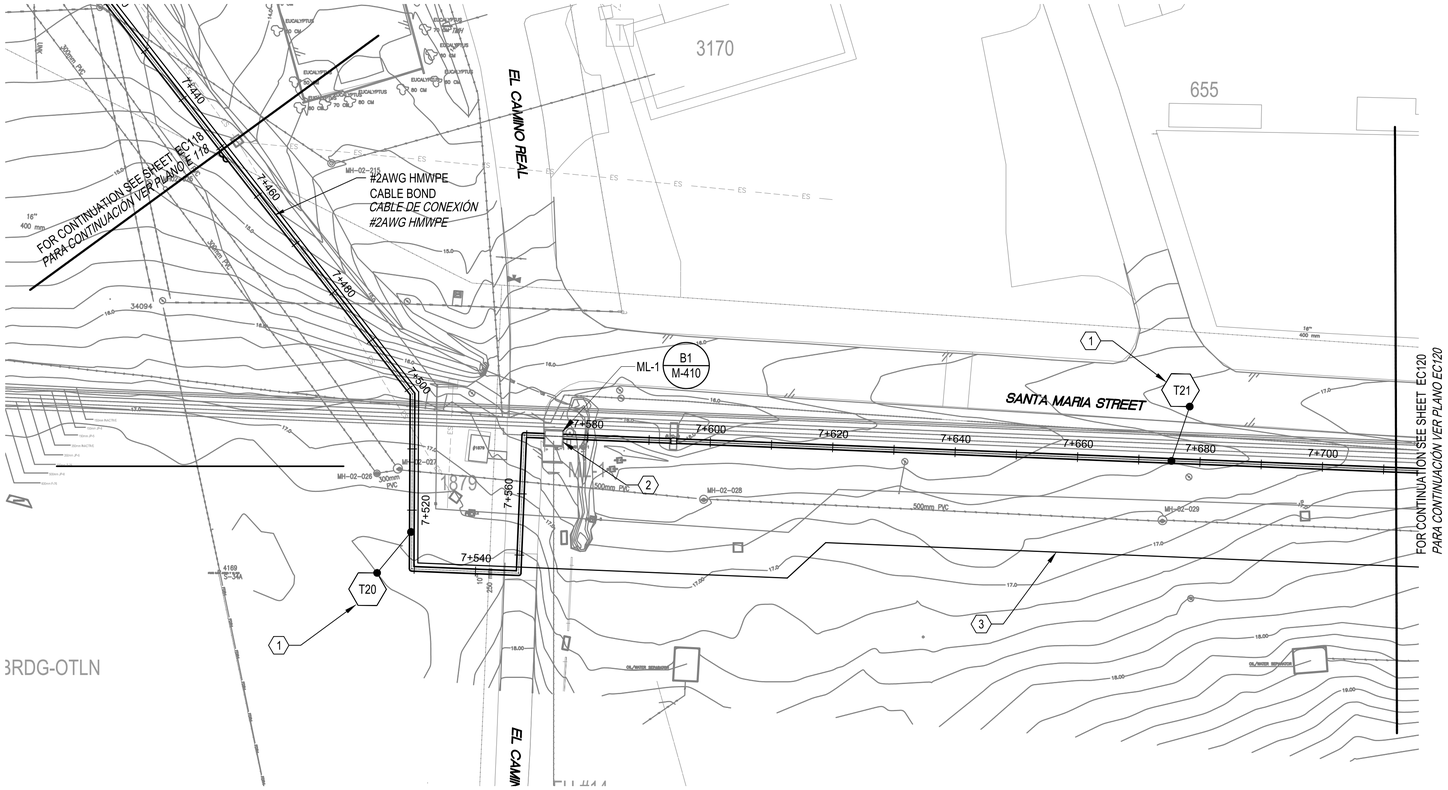

B1 CATHODIC PROTECTION PLAN
PLANTA DE PROTECCIÓN CATÓDICA
1:500

GENERAL NOTES:
NOTAS GENERALES:

1. EACH TEST STATION HAS 0 ANODES CONNECTED.
1. *CADA ESTACIÓN DE PRUEBA TIENE 0 ÁNODOS CONECTADOS.*

KEYED NOTES:
NOTAS DE REFERENCIA:

1. CATHODIC PROTECTION TEST STATION
1. *ESTACIÓN DE PRUEBAS DE PROTECCIÓN CATÓDICA.*

2. CP TEST STATION AND BONDING BOX TO BE REMOVED DURING PIPE INSTALLATION AND REINSTALLED.
2. *ESTACIÓN DE PRUEBA CP Y CAJA DE EMPALMES A RETIRAR DURANTE LA INSTALACIÓN DE LA TUBERÍA Y REINSTALAR.*

3. 450 mm JP-5 LINE TO BE INSTALLED UNDER ANOTHER CONTRACT.
3. *TUBERÍA JP-5 DE 450mm A SER INSTALADA BAJO OTRO CONTRATO.*

N

0 10 20 30 40 50
1:500

SYM	DESCRIPTION	DATE	APPR

NAVFAC

COLORADO REGISTERED PROFESSIONAL ENGINEER
STANLEY C. WORCESTER
36018
SEAL

Stanley Consultants INC.
225 Iowa Avenue, Muscatine, Iowa 52761-3764
www.stanleyconsultants.com
A/E INFO

APPROVED
FOR COMMANDER NAVFAC
ACTIVITY
SATISFACTORY TO DATE
DES SCW DRW GMR CHK LEI
PM/DM CCA/E.IL
BRANCH MANAGER
DESIGN MANAGER
FIRE PROTECTION

DEPARTMENT OF THE NAVY
NAVAL FACILITIES ENGINEERING SYSTEM COMMAND
ATLANTIC DESIGN AND CONSTRUCTION
NAVAL FACILITIES ENGINEERING SYSTEM COMMAND ~ ATLANTIC
NORFOLK, VA
NAVAL STATION ROTA
ROTA, SPAIN
REPLACE
FUEL PIPELINE FROM PIER 3 TO BULK STORAGE
CATHODIC PROTECTION PLAN
PLANTA DE PROTECCIÓN CATÓDICA

SCALE: 1:500
EPROJECT NO.: 1606884
CONSTR. CONTR. NO.
NAVFAC DRAWING NO.
14142845
SHEET 144 OF 149
EC119

NAVFAC METRIC DRAWFORM REVISION: 07 AUGUST 2018

FILE NAME: U:\29314.23\04-CWA\01-SHEETS\UTIL-1606884-E-EC119.dwg LAYOUT NAME: Layout1 PLOTTED: Tuesday, June 25, 2024 - 2:18pm USER: 6450

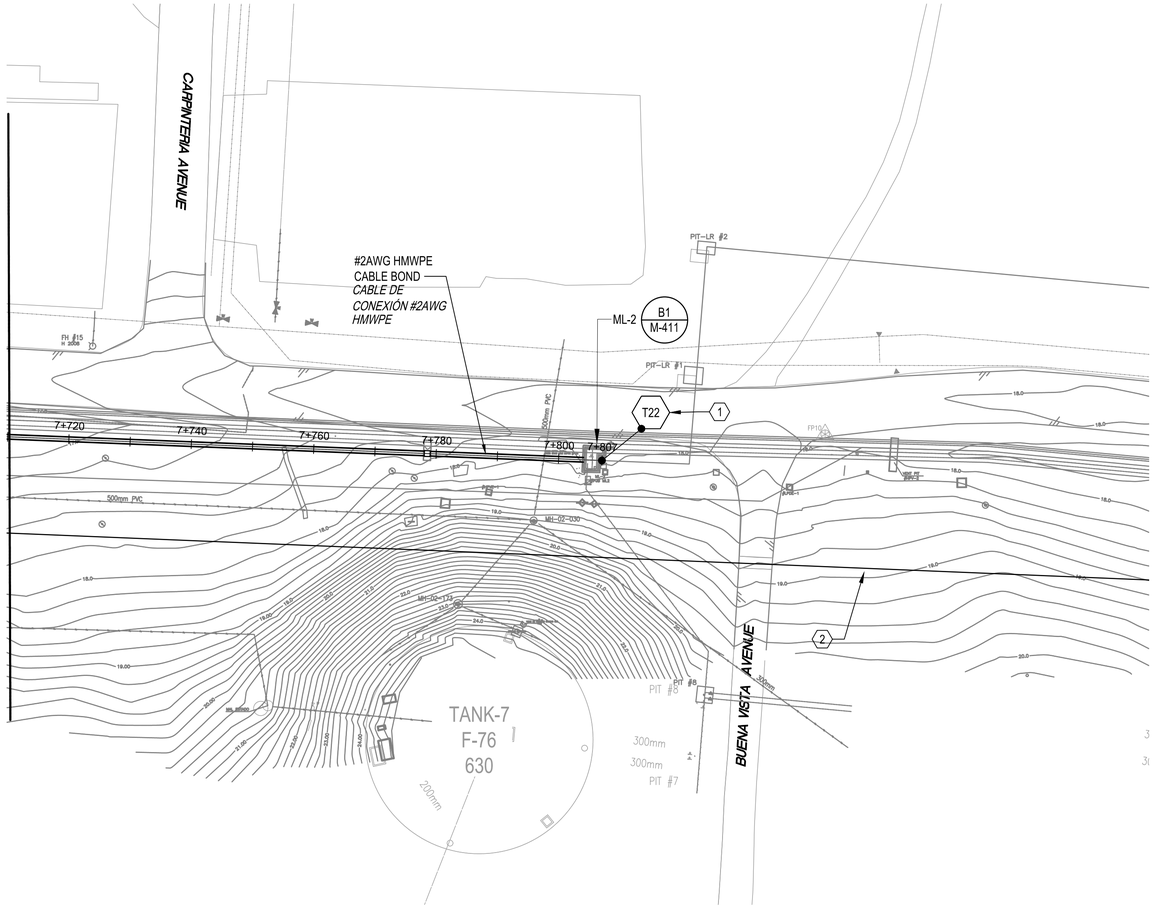

FOR CONTINUATION SEE SHEET EC109
PARA CONTINUACIÓN VER PLANO EC109

GENERAL NOTES:
NOTAS GENERALES:

1. EACH TEST STATION HAS 0 ANODES CONNECTED.
1. CADA ESTACIÓN DE PRUEBA TIENE 0 ÁNODOS CONECTADOS.

B1 CATHODIC PROTECTION PLAN
PLANTA DE PROTECCIÓN CATÓDICA
1:500

KEYED NOTES:
NOTAS DE REFERENCIA:

1. CATHODIC PROTECTION TEST STATION
1. ESTACIÓN DE PRUEBAS DE PROTECCIÓN CATÓDICA.
2. 450 mm JP-5 LINE TO BE INSTALLED UNDER ANOTHER CONTRACT.
2. TUBERÍA JP-5 DE 450mm A SER INSTALADA BAJO OTRO CONTRATO.

N

0 4 8 12 16 20
1:200

APPR	DATE	DESCRIPTION	SYM

NAVFAC

COLORADO REGISTERED PROFESSIONAL ENGINEER
STANLEY C. WORCESTER
36018
SEAL

Stanley Consultants INC.
225 Iowa Avenue, Muscatine, Iowa 52761-3764
www.stanleyconsultants.com
A/E INFO

APPROVED
FOR COMMANDER NAVFAC
ACTIVITY
SATISFACTORY TO DATE
DES SCW DRW GMR CHK LEI
PM/DM CCA/E&L
BRANCH MANAGER
DESIGN MANAGER
FIRE PROTECTION

DEPARTMENT OF THE NAVY
NAVAL FACILITIES ENGINEERING SYSTEM COMMAND
ATLANTIC DESIGN AND CONSTRUCTION
NAVAL FACILITIES ENGINEERING SYSTEM COMMAND ~ ATLANTIC
NORFOLK, VA
NAVAL STATION ROTA
ROTA, SPAIN
REPLACE
FUEL PIPELINE FROM PIER 3 TO BULK STORAGE
CATHODIC PROTECTION PLAN
PLANTA DE PROTECCIÓN CATÓDICA

SCALE: 1:500
EPROJECT NO.: 1606884
CONSTR. CONTR. NO.
NAVFAC DRAWING NO.
14142846
SHEET 145 OF 149
EC120

NAVFAC METRIC DRAWFORM REVISION: 07 AUGUST 2018

FILE NAME: U:\29314.23\04-CWA\01-SHEETS\UTIL-1606884-E-EC120.dwg LAYOUT NAME: Layout1 PLOTTED: Tuesday, June 25, 2024 - 2:19pm USER: 6450

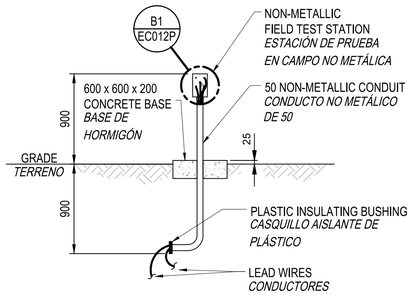

ELEVATION / *ALZADO*
TYPICAL ABOVE GROUND FIELD TEST STATION INSTALLATION
INSTALACIÓN TÍPICA DE ESTACIÓN DE PRUEBA EN CAMPO SOBRE EL TERRENO

C1 DETAIL / *DETALLE*
NTS

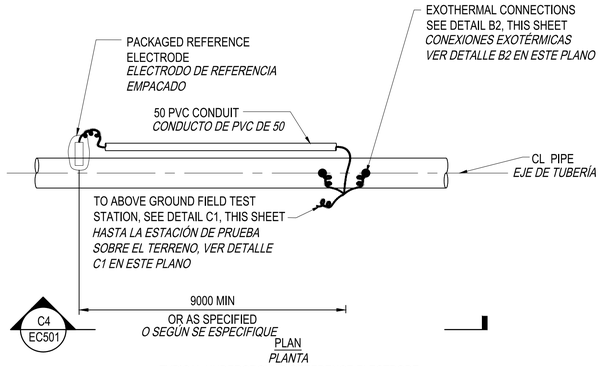

PLAN
PLANTA
TYPICAL UNDERGROUND REFERENCE ELECTRODE
INSTALLATION FOR UNDERGROUND PIPE
INSTALACIÓN TÍPICA DE ELECTRODO DE REFERENCIA
ENTERRADO PARA TUBERÍA ENTERRADA

C2 DETAIL / *DETALLE*
NTS

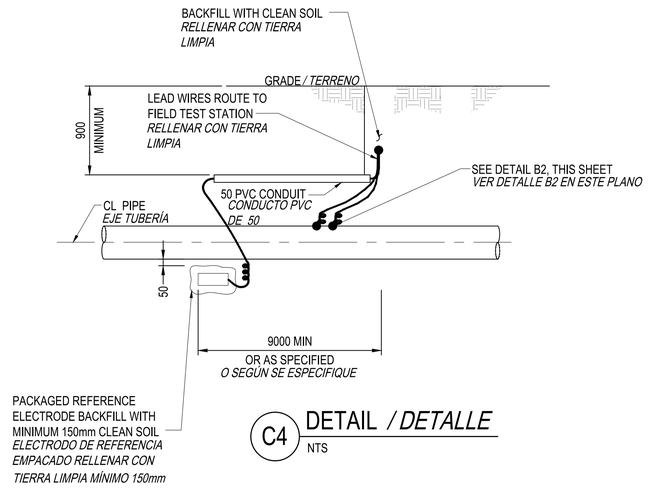

C4 DETAIL / *DETALLE*
NTS

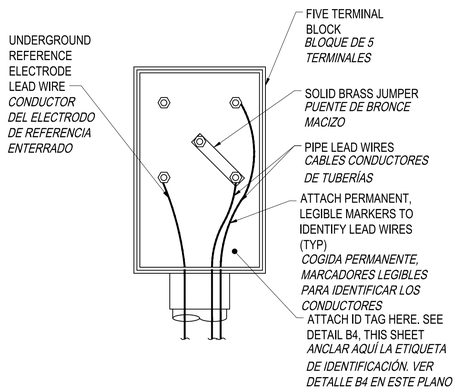

TYPICAL ABOVE GROUND TEST STATION TERMINATION DETAIL
FOR PIPE MULTIPLE ANODE GALVANIC SYSTEM
DETALLE TÍPICO DE TERMINACIÓN DE ESTACIÓN DE PRUEBA SOBRE EL
TERRENO PARA EL SISTEMA GALVÁNICO DE TUBERÍA DE MÚLTIPLES ÁNODOS

B1 DETAIL / *DETALLE*
NTS

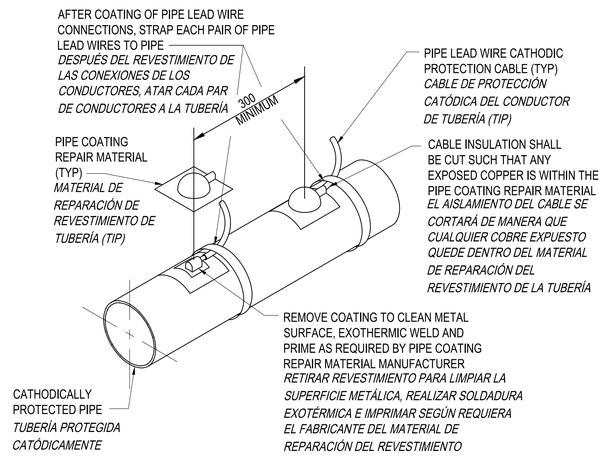

TYPICAL EXOTHERMAL CONNECTION TO PIPE
TÍPICA CONEXIÓN EXOTÉRMICA A TUBERÍA

B2 DETAIL / *DETALLE*
NTS

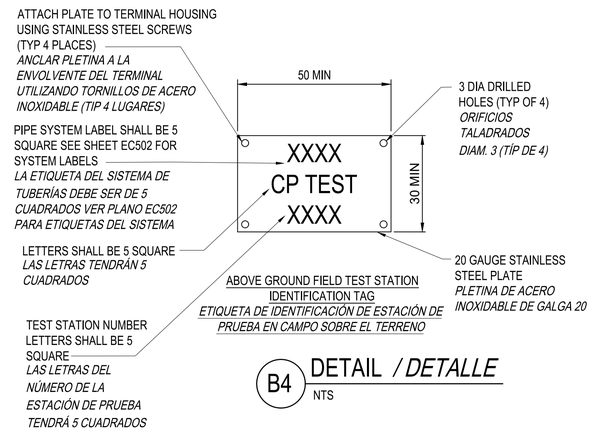

B4 DETAIL / *DETALLE*
NTS

CATHODIC PROTECTION TABLE			
TEST STATION NUMBER	PIPING	DWG	TEST STATION TYPE-NOTE 1
T01	450mm CARBON STEEL	EC107	F
T02	450mm CARBON STEEL	EC108	F
T03	450mm CARBON STEEL	EC109	F
T04	450mm CARBON STEEL	EC109	F
T05	450mm CARBON STEEL	EC109	F
T06	450mm CARBON STEEL	EC110	A
T07	450mm CARBON STEEL	EC111	A
T08	NOT USED		
T09	450mm CARBON STEEL	EC114	A
T10	450mm CARBON STEEL	EC115	A
T11	450mm CARBON STEEL	EC115	F
T12	450mm CARBON STEEL	EC116	A
T13	450mm CARBON STEEL	EC116	A
T14	450mm CARBON STEEL	EC116	A
T15	450mm CARBON STEEL	EC117	A
T16	450mm CARBON STEEL	EC117	A
T17	450mm CARBON STEEL	EC118	A
T18	450mm CARBON STEEL	EC118	A
T19	450mm CARBON STEEL	EC118	A
T20	450mm CARBON STEEL	EC119	A
T21	450mm CARBON STEEL	EC119	A
T22	450mm CARBON STEEL	EC120	A

TRANSLATION:
CATHODIC PROTECTION TABLE
TEST STATION NUMBER
TEST STATION TYPE - NOTE 1
PIPING
CARBON STEEL
TRADUCCIÓN:
TABLA PROTECCIÓN CATÓDICA
NÚMERO DE ESTACIÓN DE PRUEBA
TIPO DE ESTACIÓN DE PRUEBA -
NOTA 1 TUBERÍA DE ACERO AL
CARBONO

NOTE 1: TEST STATION TYPE A= ABOVE GRADE TEST STATION
TEST STATION TYPE F = FLUSH MOUNTED TEST STATION

NOTA 1: ESTACIÓN DE PRUEBA TIPO A = ESTACIÓN DE PRUEBA SOBRE EL TERRENO.
ESTACIÓN DE PRUEBA TIPO F = ESTACIÓN DE PRUEBA MONTADA A RAS.

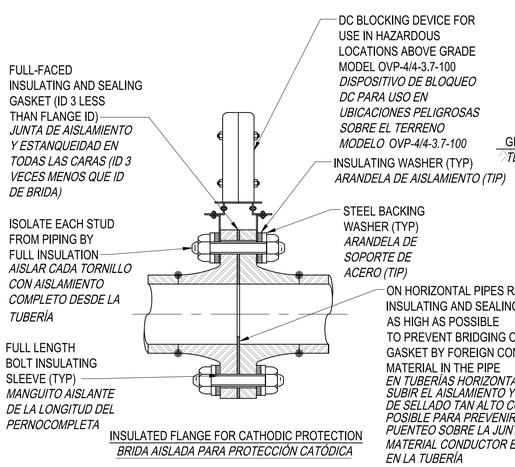

INSULATED FLANGE FOR CATHODIC PROTECTION
BRIDA AISLADA PARA PROTECCIÓN CATÓDICA

A1 DETAIL / *DETALLE*
NTS

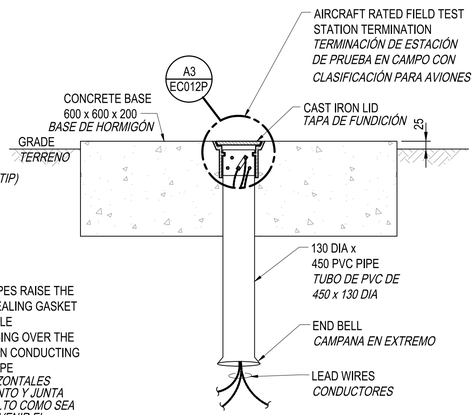

FLUSH MOUNTED FIELD TEST STATION INSTALLATION
INSTALACIÓN DE ESTACIÓN DE PRUEBA EN CAMPO MONTADA A RAS

A2 DETAIL / *DETALLE*
NTS

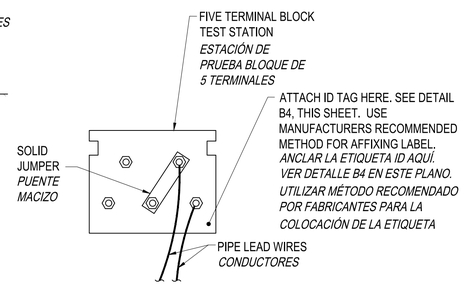

PIPE SYSTEM FLUSH MOUNTED BELOW GRADE
TEST STATION TERMINATION DETAIL
DETALLE DE TERMINACIÓN DE ESTACIÓN DE
PRUEBAS BAJO EL TERRENO MONTADA A RAS DEL
SISTEMA DE TUBERÍAS

A3 DETAIL / *DETALLE*
NTS

SYM	DESCRIPTION	DATE	APPR

NAVFAC

COLORADO REGISTERED PROFESSIONAL ENGINEER
STANLEY C. WORCESTER
36018
SEAL

Stanley Consultants INC.
225 Iowa Avenue, Muscatine, Iowa 52761-3764
www.stanleyconsultants.com
A/E INFO

APPROVED
FOR COMMANDER NAVFAC
ACTIVITY
SATISFACTORY TO DATE
DES SCW DRW GMR CHK LEI
PM/CM CCA/E.IL
BRANCH MANAGER
DESIGN MANAGER
FIRE PROTECTION

DEPARTMENT OF THE NAVY
NAVAL FACILITIES ENGINEERING SYSTEM COMMAND
ATLANTIC DESIGN AND CONSTRUCTION
NAVAL FACILITIES ENGINEERING SYSTEM COMMAND ~ ATLANTIC
NORFOLK, VA
NAVAL STATION ROTA
ROTA, SPAIN
REPLACE
FUEL PIPELINE FROM PIER 3 TO BULK STORAGE
CATHODIC PROTECTION DETAILS
DETALLES DE PROTECCIÓN CATÓDICA

SCALE: NONE
EPROJECT NO.: 1606884
CONSTR. CONTR. NO.
NAVFAC DRAWING NO. 14142847
SHEET 146 OF 149
EC501

NAVFAC METRIC DRAWFORM REVISION: 07 AUGUST 2018

FILE NAME: U:\20314.23\04-CONL\01-SHEETS\UTIL-1606884-E-EC501.dwg LAYOUT NAME: Layout1 PLOTTED: Tuesday, June 25, 2024 - 2:19pm USER: 6450

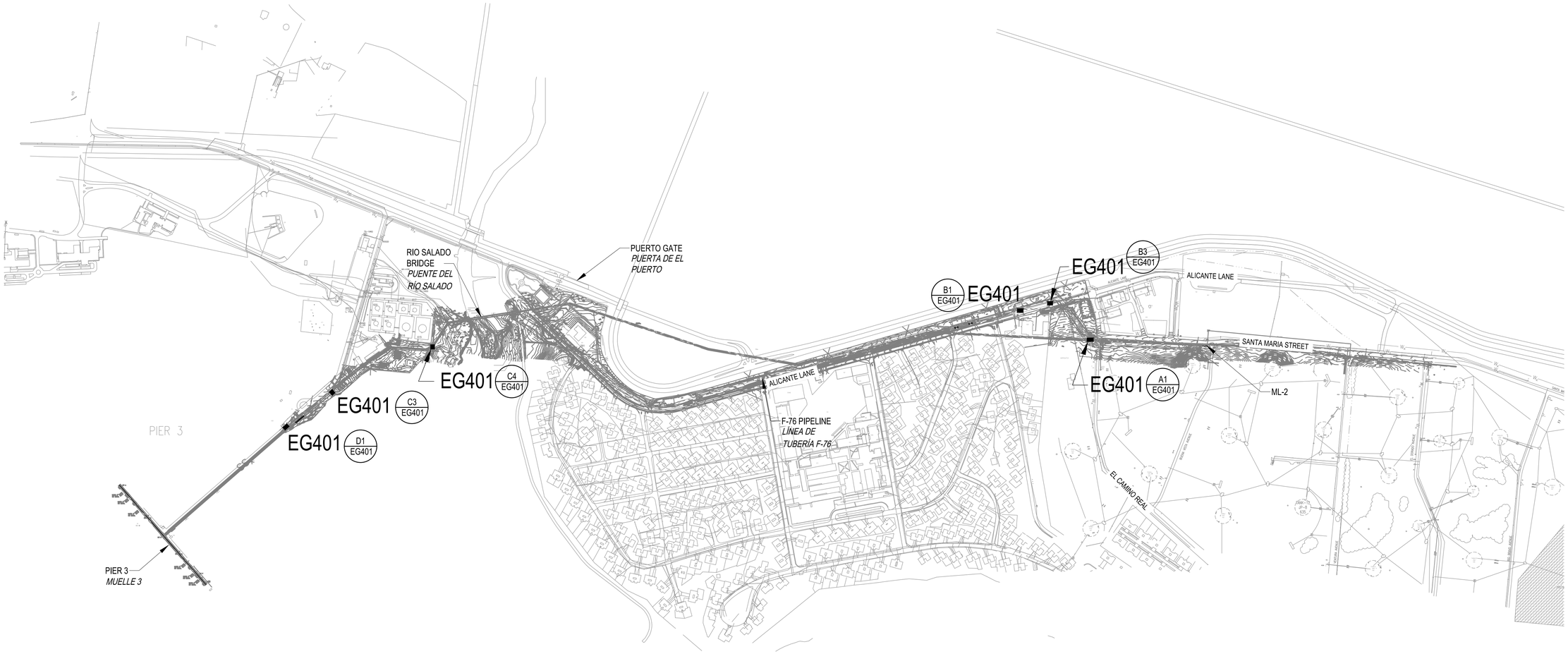

B1 OVERALL ELECTRICAL GROUNDING PLAN AND KEY MAP
PLANTA GENERAL ELECTRICA DE PUESTA A TIERRA Y DE REFERENCIA
1:5000

N

0 100 200 300 400 500
1:5000

SYM	DESCRIPTION	DATE	APPR

NAVFAC

COLORADO REGISTERED PROFESSIONAL ENGINEER
STANLEY C. WORCESTER
36018
SEAL

Stanley Consultants INC.
225 Iowa Avenue, Muscatine, Iowa 52761-3764
www.stanleyconsultants.com
A/E INFO

APPROVED
FOR COMMANDER NAVFAC
ACTIVITY
SATISFACTORY TO DATE
DES AT DRW GMR CHK MZ
PM/DM CCA/EAL
BRANCH MANAGER
DESIGN MANAGER
FIRE PROTECTION

DEPARTMENT OF THE NAVY
NAVAL FACILITIES ENGINEERING SYSTEM COMMAND
ATLANTIC DESIGN AND CONSTRUCTION
NAVAL FACILITIES ENGINEERING SYSTEM COMMAND ~ ATLANTIC
NORFOLK, VA
NAVAL STATION ROTA
ROTA, SPAIN
REPLACE
FUEL PIPELINE FROM PIER 3 TO BULK STORAGE
ELECTRICAL GROUNDING SITE PLAN AND KEY MAP
PLANTA DE REFERENCIA DE EXTERIORES GENERAL

SCALE: 1:5000
EPROJECT NO.: 1606884
CONSTR. CONTR. NO.
NAVFAC DRAWING NO. 14142848
SHEET 147 OF 149
EG101

NAVFAC METRIC DRAWFORM REVISION: 07 AUGUST 2018

FILE NAME: U:\29314.23\04-CWA\01-SHEETS\UTIL-1606884-E-EG-101.dwg LAYOUT NAME: EG101 PLOTTED: Tuesday, June 25, 2024 - 2:19pm USER: R450

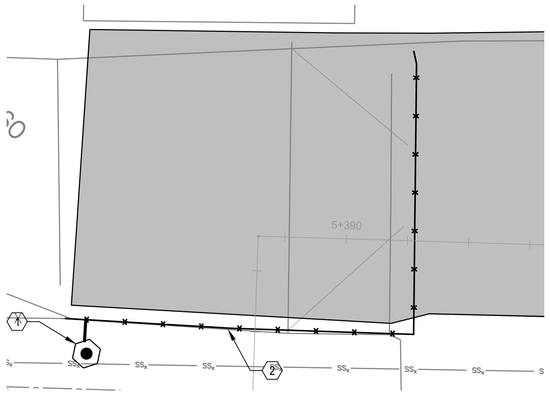

(SEE SHEET C-106 FOR DETAILS ON CHAIN LINK FENCE)
(VER PLANO C-106 PARA DETALLES DE VALLA DE SIMPLE TORSIÓN)

D1 ENLARGED GROUNDING PLAN NEAR STATION 5+380
PL. AMPLIADA DE TIERRA CERCA DE LA ESTACIÓN 5+380
NTS

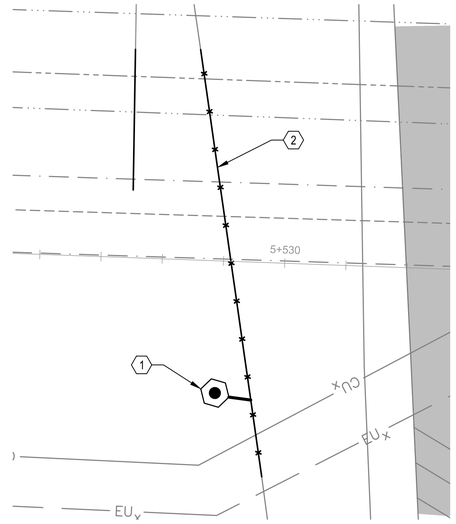

(SEE SHEET C-108 FOR DETAILS ON CHAIN LINK FENCE)
(VER PLANO C-108 PARA DETALLES DE VALLA DE SIMPLE TORSIÓN)

C2 ENLARGED GROUNDING PLAN NEAR STATION 5+530
PL. AMPLIADA DE TIERRA CERCA DE LA ESTACIÓN 5+530
NTS

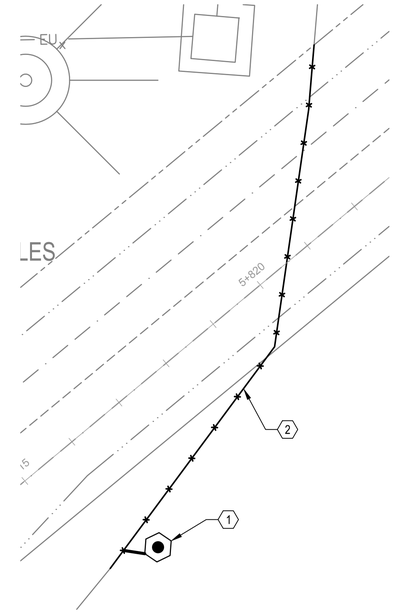

(SEE SHEET C-110 FOR DETAILS ON CHAIN LINK FENCE)
(VER PLANO C-110 PARA DETALLES DE VALLA DE SIMPLE TORSIÓN)

C4 ENLARGED GROUNDING PLAN NEAR STATION 5+820
PL. AMPLIADA DE TIERRA CERCA DE LA ESTACIÓN 5+820
NTS

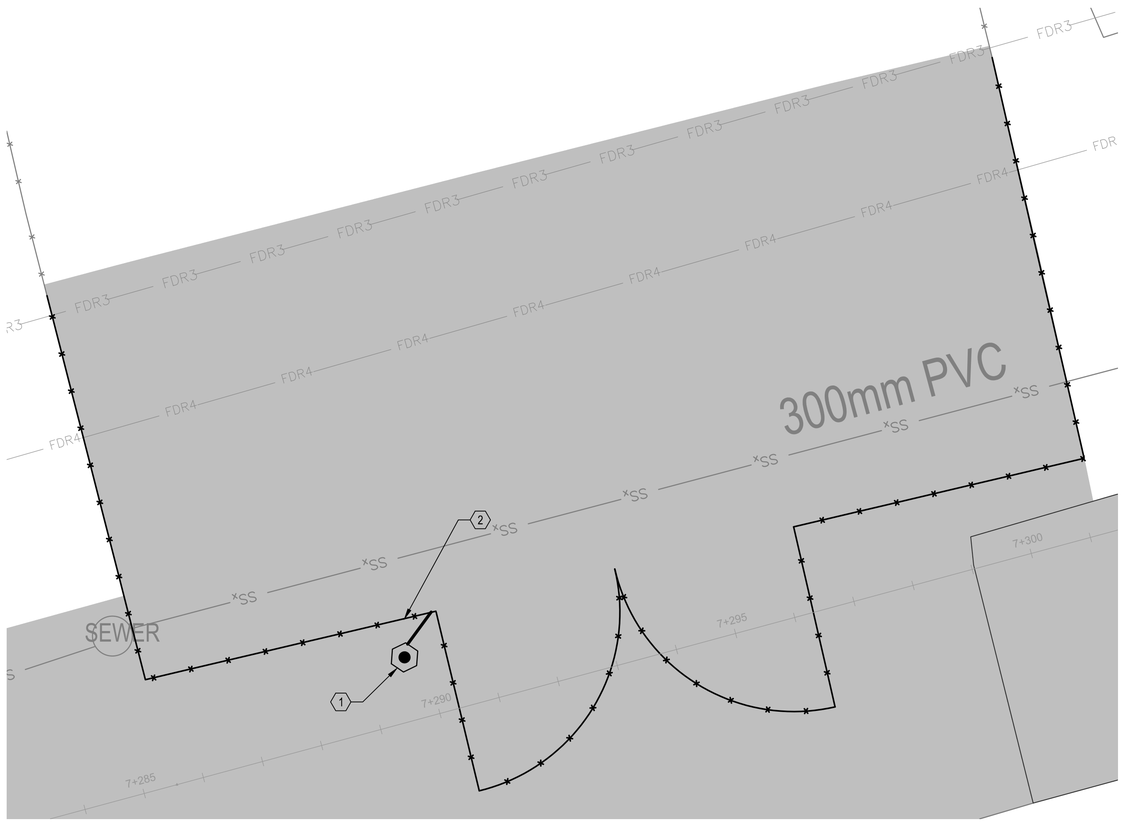

(SEE SHEET C-118 FOR DETAILS ON CHAIN LINK FENCE)
(VER PLANO C-118 PARA DETALLES DE VALLA DE SIMPLE TORSIÓN)

A1 ENLARGED GROUNDING PLAN NEAR STATION 7+290
PL. AMPLIADA DE TIERRA CERCA DE LA ESTACIÓN 7+290
NTS

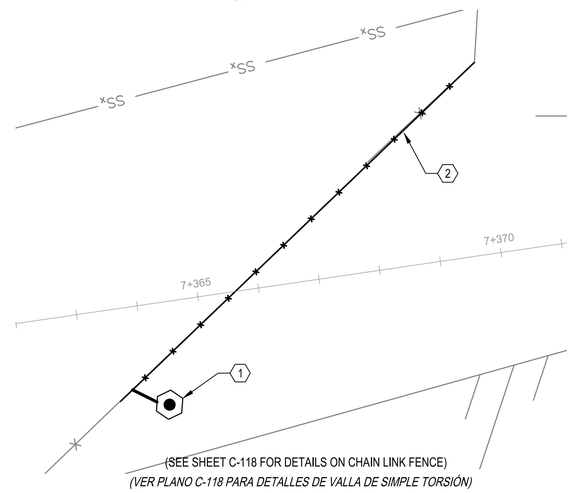

(SEE SHEET C-118 FOR DETAILS ON CHAIN LINK FENCE)
(VER PLANO C-118 PARA DETALLES DE VALLA DE SIMPLE TORSIÓN)

B3 ENLARGED GROUNDING PLAN NEAR STATION 7+365
PL. AMPLIADA DE TIERRA CERCA DE LA ESTACIÓN7+365
NTS

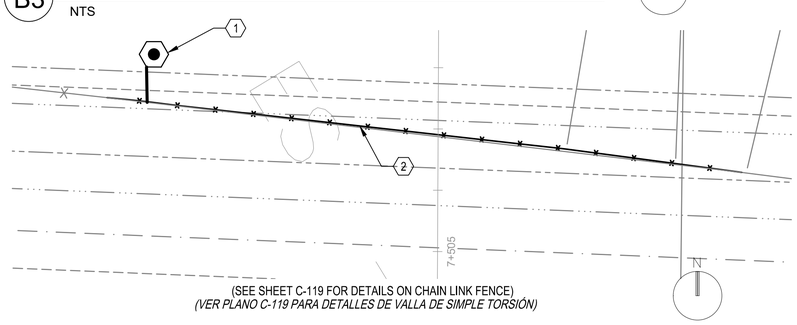

(SEE SHEET C-119 FOR DETAILS ON CHAIN LINK FENCE)
(VER PLANO C-119 PARA DETALLES DE VALLA DE SIMPLE TORSIÓN)

A3 ENLARGED GROUNDING PLAN NEAR STATION 7+505
PL. AMPLIADA DE TIERRA CERCA DE LA ESTACIÓN 7+505
NTS

KEYED NOTES:
NOTAS DE REFERENCIA:

1. PROVIDE GROUNDING FOR NEW FENCE.
1. *PROVEER PUESTA A TIERRA PARA LA VALLA NUEVA.*
2. BOLD LINE INDICATES NEW FENCE THAT TIES INTO EXISTING FENCE ON BOTH ENDS.
2. *LA LÍNEA EN NEGRITA INDICA VALLA NUEVA QUE SE ATA A LA VALLA EXISTENTE EN AMBOS EXTREMOS.*

GENERAL NOTES:
NOTAS GENERALES:

1. SEE GROUNDING DETAILS ON SHEET EG501.
1. *VER DETALLES DE PUESTA A TIERRA EN PLANO EG501.*

0 1 2 3 4 5
1:50

SYM	DESCRIPTION	DATE	APPR

NAVFAC

COLORADO REGISTERED PROFESSIONAL ENGINEER
STANLEY C. WORCESTER
36018
SEAL

Stanley Consultants INC.
225 Iowa Avenue, Muscatine, Iowa 52761-3764
www.stanleyconsultants.com
A/E INFO

APPROVED
FOR COMMANDER NAVFAC
ACTIVITY
SATISFACTORY TO DATE
DES AT DRW GMR CHK MZ
PM/DM CCA/ELL
BRANCH MANAGER
DESIGN MANAGER
FIRE PROTECTION

DEPARTMENT OF THE NAVY
NAVAL FACILITIES ENGINEERING SYSTEM COMMAND
ATLANTIC DESIGN AND CONSTRUCTION
NAVAL FACILITIES ENGINEERING SYSTEM COMMAND ~ ATLANTIC
NORFOLK, VA
NAVAL STATION ROTA
ROTA, SPAIN
REPLACE
FUEL PIPELINE FROM PIER 3 TO BULK STORAGE
ELECTRICAL ENLARGED GROUNDING PLANS
PLANTAS ELÉCTRICAS AMPLIADAS DE PUESTA A TIERRA

SCALE: 1:50
EPROJECT NO.: 1606884
CONSTR. CONTR. NO.
NAVFAC DRAWING NO. 14142849
SHEET 148 OF 149
EG401

NAVFAC METRIC DRAWFORM REVISION: 07 AUGUST 2018

FILE NAME: U:\20314.23\04-CAD\01-SHEETS\UTI-1606884-E-EG-401.dwg LAYOUT NAME: EG401 PLOTTED: Tuesday, June 25, 2024 - 2:20pm USER: 6450

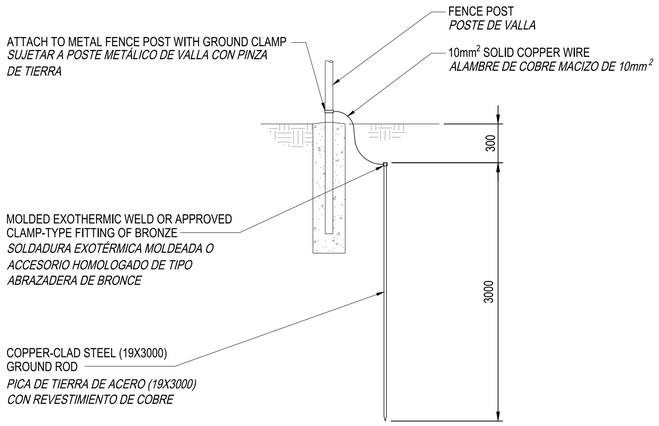

C3 FENCE POST GROUNDING
PUESTA A TIERRA DE POSTE DE VALLA
NTS

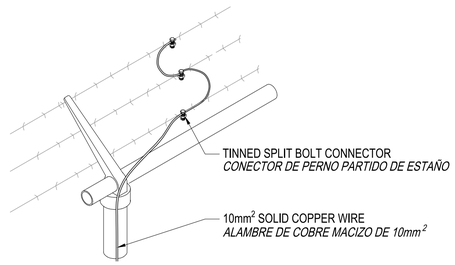

C4 FENCE GROUND
TIERRA DE VALLA
NTS

KEYED NOTES:
NOTAS DE REFERENCIA:

1. FENCE GROUNDING LOCATIONS ARE SHOWN ON DWG EG 401.
1. *UBICACIONES DE PUESTA A TIERRA DE VALLA SE MUESTRAN EN EL PLANO EG-401*

SYM	DESCRIPTION	DATE	APPR

NAVFAC

COLORADO REGISTERED PROFESSIONAL ENGINEER
STANLEY C. WORCESTER
36018
SEAL

Stanley Consultants INC.
225 Iowa Avenue, Muscatine, Iowa 52761-3764
www.stanleyconsultants.com
A/E INFO

APPROVED
FOR COMMANDER NAVFAC
ACTIVITY
SATISFACTORY TO DATE
DES AT DRW GMR CHK MZ
PM/DM CCA/E.IL
BRANCH MANAGER
DESIGN MANAGER
FIRE PROTECTION

DEPARTMENT OF THE NAVY
NAVAL FACILITIES ENGINEERING SYSTEM COMMAND
ATLANTIC DESIGN AND CONSTRUCTION
NAVAL FACILITIES ENGINEERING SYSTEM COMMAND ~ ATLANTIC
NORFOLK, VA
NAVAL STATION ROTA
ROTA, SPAIN
REPLACE
FUEL PIPELINE FROM PIER 3 TO BULK STORAGE
ELECTRICAL GROUNDING DETAILS
DETALLES ELÉCTRICOS DE PUESTA A TIERRA

SCALE: 1:50
EPROJECT NO.: 1606884
CONSTR. CONTR. NO.
NAVFAC DRAWING NO.: 14142850
SHEET 149 OF 149
EG501

NAVFAC METRIC DRAWFORM REVISION: 07 AUGUST 2018

FILE NAME: U:\29314.23\04-CWA\01-SHEETS\UTIL-1606884-E-EG501.dwg LAYOUT NAME: EG501 PLOTTED: Tuesday, June 25, 2024 - 2:20pm USER: 6450