US Army Corps of Engineers ®
JAPAN DISTRICT

PRIME CONSULTANT

Jacobs
JACOBS ENGINEERING GROUP INC.
777 MAIN STREET, FORT WORTH, TX 76102
USA

FY25 REPAIR HVAC WIDEBAND SATCOM OPS B100 CAMP BUCKNER COMMUNICATIONS ANNEX, OKINAWA JAPAN

DRAFT

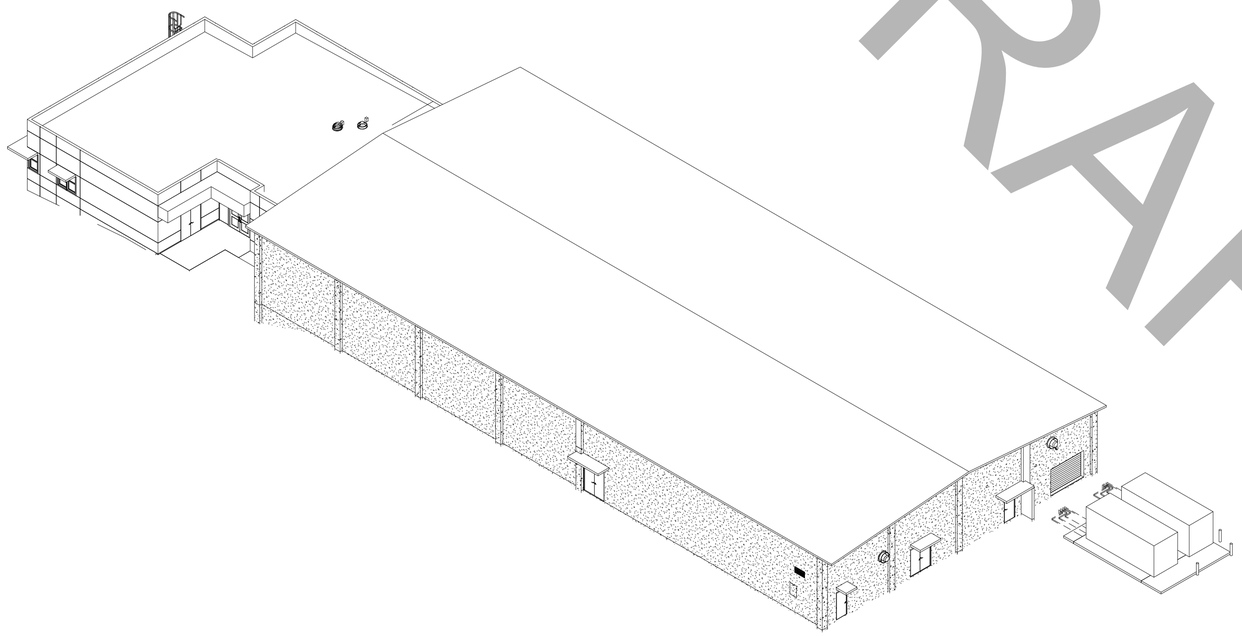

SITE LOCATION MAP

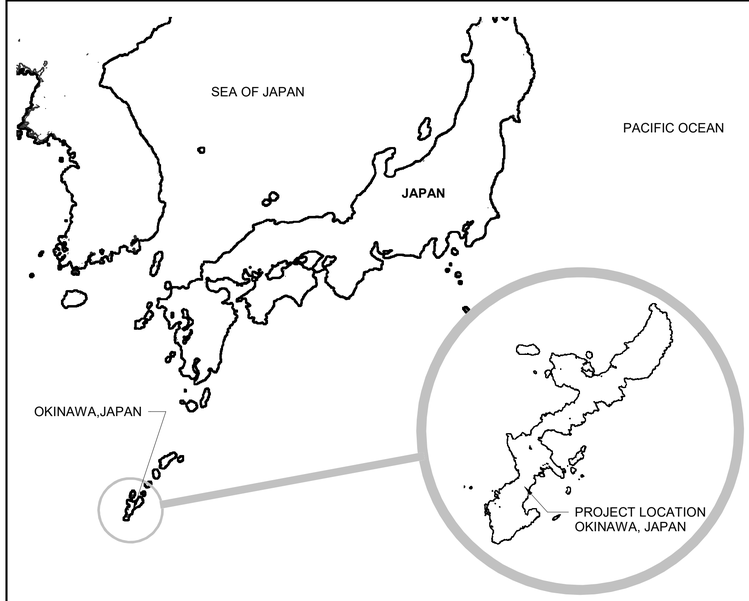

VICINITY MAP

SOLICITATION NO.: --
CONTRACT NO.:
ISSUE DATE:

JEG Proj. No. D3449300

US Army Corps of Engineers
Japan District ®

FOR REVIEW ONLY
THESE DOCUMENTS ARE FOR CONCEPT DESIGN AND NOT INTENDED FOR CONSTRUCTION, BIDDING OR PERMIT PURPOSES. THEY WERE PREPARED BY, OR UNDER SUPERVISION OF:
Christopher M. Surles
NAME
TX 23638 — REGISTRATION #
09/04/2025 — DATE
TEXAS REGISTERED ENGINEERING FIRM F-2966

MARK	DESCRIPTION	DATE

ISSUE DATE: 09/04/2025
SOLICITATION NO.:
CONTRACT NO.:
DRAWING CODE:

DESIGNED BY: CHRIS SURLES
DRAWN BY: DANNY TULON
CHECKED BY: KELVIN CARLSON
SUBMITTED BY: A. GUERRA
SIZE: ISO A1
FILE NAME: G-001

US ARMY CORPS OF ENGINEERS
JAPAN ENGINEER DISTRICT
OKINAWA, JAPAN
Jacobs
JACOBS GOVERNMENT SERVICES COMPANY
777 MAIN STREET, FORT WORTH, TX 76102
USA
JEG Proj. No. D3449300

FY25 REPAIR HVAC WIDEBAND SATCOM OPS B100
CAMP BUCKNER COMMUNICATIONS ANNEX
OKINAWA, JAPAN
PROJECT NUMBER:D3449305
COVER SHEET

SHEET ID
G-001

G G-001-

FILE PATH: C:_Revit_Local_Models\2022\D3449305-G-3D_Jake.Metzler.rvt
PLOT DATE: 8/29/2025 10:51:31 AM PLOTTED BY: PLOT SCALE: 1 : 1

BACKCHECK SUBMITTAL DESIGN

GENERAL

NO	DRAWING TITLE
G-001	COVER SHEET
G-002	SHEET INDEX
G-100	HAUL ROUTE & CONTRACTOR LAYDOWN
G-I002	DRAWING ABBREVIATIONS AND SYMBOLS
G-I003	DRAWING ABBREVIATIONS AND SYMBOLS
G-I110	CODE COMPLIANCE PLAN
GI010	OVERALL PHASING PLAN - PHASE 1
GI011	OVERALL PHASING PLAN - PHASE 2 & 3
GI012	BUILDING CODE ANALYSIS
GI013	LIFE SAFETY CODE ANALYSIS
GI014	LIFE SAFETY OVERALL FLOOR PLAN

ENVIRONMENTAL

NO	DRAWING TITLE
H-001	BUILDING 100 HAZARDOUS MATERIALS REMOVAL PLAN
HD-101	BUILDING 100 HAZARDOUS MATERIALS REMOVAL PLAN
HD-102	PARTIAL DEMOLITION FLOOR PLAN - AREA B

STRUCTURAL

NO	DRAWING TITLE
S-001	STRUCTURAL NOTES-LEGENDS-SYMBOLS
S-002	GENERAL STRUCTURAL NOTES
S-100	FOUNDATION PLAN
S-201	RETROFIT AND NEW CONSTRUCTION SECTIONS/DETAILS

ARCHITECTURAL

NO	DRAWING TITLE
A-001	GENERAL NOTES AND PERSPECTIVES
AD101	OVERALL DEMOLITION PLANS
AD102	PARTIAL DEMOLITION FLOOR PLAN - AREA A
AD103	PARTIAL DEMOLITION FLOOR PLAN - AREA B
AD122	PARTIAL DEMOLITION REFLECTED CEILING PLAN - AREA A
AD123	PARTIAL DEMOLITION REFLECTED CEILING PLAN - AREA B
AD131	DEMOLITION ROOF PLAN
AE101	OVERALL PLANS
AE102	PARTIAL FLOOR PLAN - AREA A
AE103	PARTIAL FLOOR PLAN - AREA B
AE122	PARTIAL REFLECTED CEILING PLAN - AREA A
AE123	PARTIAL REFLECTED CEILING PLAN - AREA B
AE131	OVERALL ROOF PLAN
A-401	ENLARGED PLANS - VESTIBULE, TOILET AND TOILET ACCESSORIES
A-451	CANOPY DETAILS
A-521	CEILING DETAILS
A-601	PARTITION TYPE, DOOR, FRAME AND FINISH SCHEDULES
A-602	DOOR DETAILS
A-603	PENETRATION AND LOUVER DETAILS

FIRE PROTECTION

NO	DRAWING TITLE
FA001	FIRE ALARM / MASS NOTIFICATION GENERAL NOTES
FD101	FIRE ALARM / MASS NOTIFICATION DEMOLITION PLAN
FA101	FIRE ALARM / MASS NOTIFICATION OVERALL PLAN
FA102	FIRE ALARM / MASS NOTIFICATION PARTIAL FLOOR PLAN - AREA A
FA103	FIRE ALARM / MASS NOTIFICATION PARTIAL FLOOR PLAN - AREA B
FA501	FIRE ALARM / MASS NOTIFICATION DETAILS

MECHANICAL

NO	DRAWING TITLE
M-001	MECHANICAL GENERAL NOTES
MD101	OVERALL DEMOLITION HVAC PLAN
MD102	PARTIAL DEMOLITION HVAC - AREA A
MD103	PARTIAL DEMOLITION HVAC - AREA B
M-101	OVERALL HVAC PLAN
M-102	PARTIAL HVAC FLOOR PLAN - AREA A
M-103	PARTIAL HVAC FLOOR PLAN - AREA B
M-301	HVAC BUILDING SECTION
M-302	HVAC BUILDING SECTION
M-401	HVAC ENLARGED PLANS
M-501	HVAC DETAILS
M-502	HVAC DETAILS
M-503	HVAC DETAILS
M-504	HVAC DETAILS
M-601	HVAC SCHEDULES
M-602	HVAC SCHEDULES
M-701	CHILLED WATER DIAGRAM
M-801	HVAC CONTROLS
M-802	HVAC CONTROLS
M-803	HVAC CONTROLS
M-804	HVAC CONTROLS
M-805	HVAC CONTROLS
M-806	HVAC CONTROLS
M-807	HVAC CONTROLS
M-808	HVAC CONTROLS
M-809	POINT LIST INSTRUCTIONS
M-810	I/O POINTS LIST
M-811	I/O POINTS LIST
M-812	I/O POINTS LIST
M-813	I/O POINTS LIST
M-814	I/O POINTS LIST

PLUMBING

NO	DRAWING TITLE
P-101	PARTIAL PLUMBING FLOOR PLAN - AREA B

ELECTRICAL

NO	DRAWING TITLE
E-001	LEGEND AND ABBREVIATIONS
ED101	PARTIAL DEMOLITION POWER PLAN - AREA A
ED102	PARTIAL DEMOLITION POWER PLAN - AREA B
ED103	PARTIAL DEMOLITION LIGHTING PLAN - AREA A
ED104	PARTIAL DEMOLITION LIGHTING PLAN - AREA B
E-101	PARTIAL POWER PLAN - AREA A
E-102	PARTIAL POWER PLAN - AREA B
E-103	PARTIAL POWER ROOF PLAN - AREA A
E-104	PARTIAL LIGHTING PLAN - AREA A
E-105	PARTIAL LIGHTING PLAN - AREA B
E-501	DETAILS
E-502	DETAILS
E-601	DEMOLITION ONE-LINE DIAGRAM
E-602	ONE-LINE DIAGRAM
E-603	EQUIPMENT SCHEDULE
E-604	PANEL SCHEDULES
E-605	PANEL SCHEDULES
E-606	PANEL SCHEDULES
E-607	LIGHTING SCHEDULES

COMMUNICATIONS

NO	DRAWING TITLE
T-001	GENERAL NOTES & LEGEND
T-101	TELECOM - OVERALL PLANS
T-102	TELECOM - PARTIAL FLOOR PLAN - AREA A
T-103	TELECOM - PARTIAL FLOOR PLAN - AREA B
T-201	TELECOM ELEVATIONS
T-401	TELECOM ENLARGED PLANS
T-501	TELECOM DETAILS
T-502	TELECOM DETAILS
T-503	TELECOM DETAILS
T-504	TELECOM DETAILS
T-601	TELECOM RISER DIAGRAM

DRAFT

US Army Corps of Engineers
Japan District ®

FOR REVIEW ONLY

THESE DOCUMENTS ARE FOR CONCEPT DESIGN AND NOT INTENDED FOR CONSTRUCTION, BIDDING OR PERMIT PURPOSES. THEY WERE PREPARED BY, OR UNDER SUPERVISION OF:

Christopher M. Surles
NAME

TX 23638 — REGISTRATION #
09/04/2025 — DATE

TEXAS REGISTERED ENGINEERING FIRM F-2966

MARK	DESCRIPTION	DATE

ISSUE DATE: 09/04/2025
SOLICITATION NO.:
CONTRACT NO.:
DRAWING CODE:

DESIGNED BY: CHRIS SURLES
DRAWN BY: LAWRENCE LON
CHECKED BY: KELVIN CARLSON
SUBMITTED BY: A. GUERRA
SIZE: ISO A1
FILE NAME: G-002

US ARMY CORPS OF ENGINEERS
JAPAN ENGINEER DISTRICT
OKINAWA, JAPAN

Jacobs
JACOBS GOVERNMENT SERVICES COMPANY
777 MAIN STREET, FORT WORTH, TX 76102
USA

FY25 REPAIR HVAC WIDEBAND SATCOM OPS B100
CAMP BUCKNER COMMUNICATIONS ANNEX
OKINAWA, JAPAN
PROJECT NUMBER:D3449305

SHEET INDEX

SHEET ID

G-002

G G-002-

FILE PATH: C:_Revit_Local_Models\2022\D3449305-G-3D_Jake.Metzler.rvt
PLOT DATE: 8/29/2025 10:51:31 AM PLOTTED BY: PLOT SCALE:

BACKCHECK SUBMITTAL DESIGN

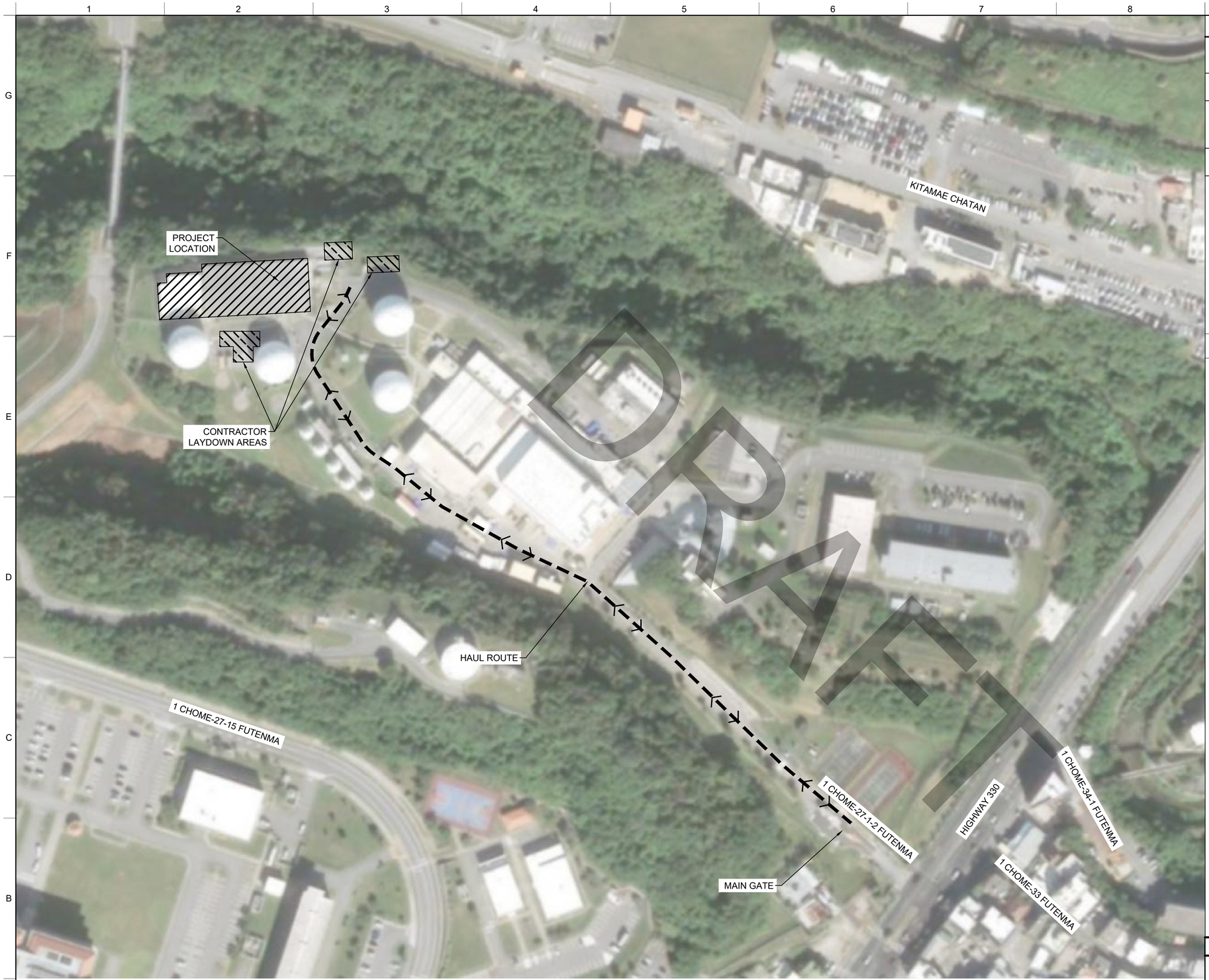

A1 HAUL ROUTE & CONTRACTOR LAYDOWN

1 : 1000

GENERAL NOTES

A	CONTRACTOR IS RESPONSIBLE FOR SECURITY OF ALL EQUIPMENT AND STORED MATERIALS. NO COVERED STORAGE IS AVAILABLE.
B	CONTRACTOR IS RESPONSIBLE FOR ANY DAMAGE CAUSED BY CONSTRUCTION ACTIVITY.
C	ALL GRUBBING AND CLEARING RESIDUE, DEMOLISHED MATERIAL RUBBISH AND DEBRIS GENERATED BY THIS PROJECT SHALL BE HAULED OFFSITE TO AN APPROVED LANDFILL.
D	MICROSOFT PRODUCT SCREEN SHOT REPRESENTED WITH PERMISSION FROM MICROSOFT CORPORATION.

LEGEND

TWO WAY HAUL ROUTE

PROJECT LOCATION

CONTRACTOR LAYDOWN AREA

KEY PLAN

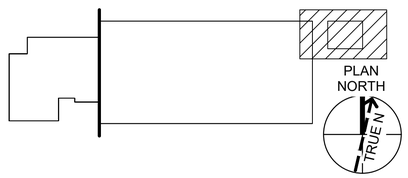

GRAPHIC SCALE(S)

0 20000 40000

SCALE: 1:1000

US Army Corps of Engineers
Japan District ®

FOR REVIEW ONLY

THESE DOCUMENTS ARE FOR CONCEPT DESIGN AND NOT INTENDED FOR CONSTRUCTION BIDDING OR PERMIT PURPOSES. THEY WERE PREPARED BY, OR UNDER SUPERVISION OF:

LISA M. HEROUX
NAME

TX 156321 — REGISTRATION #
09/04/2025 — DATE

TEXAS REGISTERED ENGINEERING FIRM F-2966

MARK	DESCRIPTION	DATE

DESIGNED BY: L. HEROUX
DRAWN BY: B. CAPPELLA
CHECKED BY: D. GIMBEL
SUBMITTED BY: A. GUERRA
SIZE: ISO A1
FILE NAME: G-100

ISSUE DATE: 09/04/2025
SOLICITATION NO.: -
CONTRACT NO.: -
DRAWING CODE: -

US ARMY CORPS OF ENGINEERS
JAPAN ENGINEER DISTRICT
OKINAWA, JAPAN

Jacobs
JACOBS ENGINEERING GROUP INC.
777 MAIN STREET, FORT WORTH, TX 76102
USA

FY25 REPAIR HVAC WIDEBAND SATCOM OPS B100
CAMP BUCKNER COMMUNICATIONS ANNEX
OKINAWA, JAPAN
PROJECT NUMBER:D3449305

HAUL ROUTE & CONTRACTOR LAYDOWN

SHEET ID

G-100

BACKCHECK SUBMITTAL DESIGN

FILE PATH: C:_Revit_Local_Models\2022\D3449305-G-3D_lamont.fallon.rvt
PLOT DATE: 3/11/2025 10:13:38 AM PLOTTED BY: PLOT SCALE:

DRAWING ABBREVIATIONS

#	
#	NUMBER, POUND
&	AND
@	AT
Ø	DIAMETER
A	
A	AMPERE
A/C	AIR CONDITIONING
A/C UNIT	AIR CONDITIONING UNIT
A/E	ARCHITECT/ ENGINEER
AB	ANCHOR BOLT
ABA	ARCHITECTURAL BARRIERS ACT STANDARD
AC	ALTERNATING CURRENT/ABOVE COUNTER, ASPHALT CONCRETE
ACC	ACCESSIBLE
ACI	AMERICAN CONCRETE INSTITUTE
ACS	AUTOMATIC CONTROL SYSTEM
ACS DR	ACCESS DOOR
ACS FLR	ACCESS FLOOR
ACS PNL	ACCESS PANEL
ACST	ACOUSTICAL
ACT	ACOUSTICAL CEILING TILE
AD	AIR DEVICE
ADA	AMERICANS WITH DISABILITIES ACT
ADDL	ADDITIONAL
ADJ	ADJUSTABLE
ADMIN	ADMINISTRATION
AF	AMPERE FRAME
AFC	ABOVE FINISHED COUNTER
AFCI	ARC FAULT CIRCUIT INTERRUPTER
AFF	ABOVE FINISHED FLOOR
AFG	ABOVE FINISHED GRADE
AFS	ABOVE FINISHED SLAB
AGGR	AGGREGATE
AHU	AIR HANDLING UNIT
AIB	AIR INFILTRATION BARRIER
AIC	AMPERE INTERRUPTING CAPACITY
AISC	AMERICAN INSTITUTE OF STEEL CONSTRUCTION
ALNMT	ALIGNMENT
ALUM	ALUMINUM
ANOD	ANODIZE
ANT	ANTENNA
APC	ACOUSTICAL PANEL CEILING
APPROX	APPROXIMATE (-LY)
ARCH	ARCHITECT (-TURAL)
ASC	ABOVE SUSPENDED CEILING
ASCE	AMERICAN SOCIETY OF CIVIL
ASPH	ASPHALT
ASSY	ASSEMBLY
ASTM	AMERICAN SOCIETY FOR TESTING AND MATERIALS
AT	AMPERE TRIP
ATS	AUTOMATIC TRANSFER SWITCH
AUTO	AUTOMATIC
AUX	AUXILIARY
AVG	AVERAGE
AWG	AMERICAN WIRE GAUGE
AWI	ARCHITECTURAL WOODWORK INSTITUTE
AWT	ACOUSTICAL WALL TREATMENT
AWWA	AMERICAN WATER WORKS ASSOCIATION
B	
B-B, B/B	BACK TO BACK
BATT	BATTERY
BB	BASEBOARD
BC	BACK OF CURB, BOTTOM OF CURB, BOOKCASE
BD	BOARD
BDRY	BOUNDARY
BF	BOTH FACES
BFF	BELOW FINISH FLOOR
BFG	BELOW FINISHED GRADE
BFP	BACKFLOW PREVENTER
BHMA	BUILDER'S HARDWARE MANUFACTURER'S ASSOCIATION
BKBD	BACKBOARD
BLDG	BUILDING
BLKG	BLOCKING
BLT IN	BUILT-IN
BLW	BELOW
BM	BALANCED MAGNETIC SWITCH, BEAM, BENCHMARK
BN	BULLNOSE
BOD	BOTTOM OF DUCT
BOP	BOTTOM OF PIPE
BOS	BOTTOM OF STEEL
BOT	BOTTOM
BP	BASE PLATE, BUILDING PAPER
BRES	BULLET-RESISTANT
BRG	BEARING
BRKR	BREAKER
BRKT	BRACKET
BS	BOTH SIDES
BTU	BRITISH THERMAL UNIT
BTWN	BETWEEN
BUR	BUILT-UP ROOFING
C	
C	CHANNEL, CHANNEL SHAPE, COMPRESSION, CONDUIT
C CONT	CAST CONCRETE
CAB	CABINET
CAV	CAVITY
CB	CATCH BASIN, CERAMIC BASE, CIRCUIT BREAKER
CBB	CEMENTITIOUS (BACKER) BOARD
CD	CARBON DIOXIDE SENSOR
CDW	CHILLED DRINKING WATER
CEM	CEMENT
CEQ	COLLATERAL EQUIPMENT
CER	CERAMIC
CF	CONTRACTOR FURNISHED
CF/CI	CONTRACTOR FURNISHED/ CONTRACTOR INSTALLED
CF/GI	CONTRACTOR FURNISHED/ GOVERNMENT INSTALLED
CFE	CONTRACTOR FURNISHED EQUIPMENT
CFLG	COUNTER FLASHING
CFM	CUBIC FEET PER MINUTE
CFMF	COLD-FORMED METAL FRAMING
CFS	CUBIC FEET PER SECOND
CG	CORNER GUARD
CHFR	CHAMFER
CI	CAST IRON, CURB INLET

C	
CIP	CAST IRON PIPE, CAST-IN-PLACE
CJ	CONSTRUCTION JOINT, CONTROL JOINT
CKT	CIRCUIT
CL	CENTER LINE
CLDG	CLADDING
CLG	CEILING
CLG DIFF	CEILING DIFFUSER
CLG HT	CEILING HEIGHT
CLL	COLUMN LINE
CLR	CLEAR
CM	CENTIMETER
CMU	CONCRETE MASONRY UNIT
CNDS	CONDENSATE
CO	CLEAN OUT
CO/ NOX	CARBON MONOXIDE / NITROGEN OXIDE
COE	CORPS OF ENGINEER'S (US ARMY)
COMM	COMMUNICATION (-S)
COMPR	COMPRESSOR
CONC	CONCRETE
CONC FLR	CONCRETE FLOOR
CONF	CONFERENCE
CONN	CONNECT (-ION)
CONST	CONSTRUCT (-ION)
CONT	CONTINUED, CONTINUOUS
COORD	COORDINATE
COR	CONTRACTING OFFICER'S REPRESENTATIVE
CORR	CORRIDOR
CP	CIRCULATION PUMP, CONCRETE PIPE
CPT	CARPET
CRS	COLD ROLLED STEEL
CSWK	CASEWORK
CT	CERAMIC TILE, CURRENT TRANSFORMER
CTB	CEMENT TREATED BASE, CERAMIC TILE BASE
CTF	CERAMIC TILE FLOOR
CTR	CENTER
CTRL	CONTROL
CU	CONDENSING UNIT, COPPER
CU FT	CUBIC FEET
CWR	CONDENSER WATER RETURN
CWS	CONDENSER WATER SUPPLY
D	
D	DEPTH
D/S	DISCONNECT SWITCH
DA	DRAINAGE AREA
DALI	DIGITAL ADDRESSABLE LIGHTING INTERFACE
DB	DIRECT BURIAL, DRY BULB
DBL	DOUBLE
DBM	DOUBLE BALANCED MAGNETIC SWITCH
DC	DIRECT CURRENT
DCBFP	DOUBLE CHECK BACKFLOW PREVENTER
DCD	DOUBLE CHECK DETECTOR
DCO	DOUBLE CLEANOUT
DCW	DOMESTIC COLD WATER
DEF	DEFLECTION/DEFORM
DEG	DEGREE
DEMO	DEMOLITION
DEPT	DEPARTMENT
DET	DETAIL
DHW	DOMESTIC HOT WATER
DI	DUCTILE IRON
DIA	DIAMETER
DIAG	DIAGONAL
DIM	DIMENSION
DIR	DIRECTION
DISC	DISCONNECT
DIST	DISTANCE
DL	DEAD LOAD
DN	DOWN
DOC	DOCUMENT
DR	DOOR
DR FR	DOOR FRAME
DR OPN	DOOR OPENING
DS	DOWNSPOUT
DWG(S)	DRAWING(S)
DWL	DOWEL
DX	DIRECT EXPANSION
E	
E	EAST (FOR COORDINATES)
EA	EACH, EXHAUST AIR
EDP1	EMERGENCY DISTRIBUTION PANELBOARD 1
EEWS	EMERGENCY EYEWASH/SHOWER
EF	EACH FACE
EF, EXH FN	EXHAUST FAN
EGB	ELECTRICAL GROUND BAR
EHD	ELECTRIC HAND DRYER
EJ	EXPANSION JOINT
EL	ELEVATION
ELEC	ELECTRIC (-AL)
EMCS	ENERGY MANAGEMENT CONTROL SYSTEM
EMER	EMERGENCY
EMT	ELECTRICAL METALLIC TUBING
ENCL	ENCLOSURE
ENGR	ENGINEER
ENTR	ENTRANCE
ENVIR	ENVIRONMENT
EPS	EXPANDED POLYSTYRENE BOARD (INSULATION)
EQ	EQUAL
EQUIP	EQUIPMENT
ES	EACH SIDE, HVAC EMERGNECY SWITCH
ESB	EMERGENCY SWITCHBOARD
ESD	ELECTROSTATIC DISSIPATING
ET	EXPANSION TANK
ETR	EXISTING TO REMAIN
EW	EACH WAY
EWC	ELECTRIC WATER COOLER
EWEF	EACH WAY, EACH FACE
EX, EXIST	EXISTING
EXH	EXHAUST
EXH HD	EXHAUST HOOD
EXHV	EXHAUST VENT
EXP	EXPANSION, EXPOSED

E	
EXT	EXTERIOR, EXTINGUISHER
EXT GR	EXTERIOR GRADE
EXT LT	EXIT LIGHT
F	
F	FEMALE, FIRE WATER
FA	FIRE ALARM
FAAP	FIRE ALARM ANNUNCIATOR PANEL
FACIL	FACILITY
FACP	FIRE ALARM CONTROL PANEL
FAS BD	FASCIA BOARD
FB	FACE OF BUILDING
FC	FREQUENCY CONVERTER/FOOTCANDLE
FC BRK	FACE BRICK
FC/ DC	FREQUENCY CONVERTER/DC RECTIFIER
FCO	FLOOR CLEANOUT
FCU	FAN COIL UNIT
FD	FIRE DAMPER, FLOOR DRAIN
FDC	FIRE DEPARTMENT CONNECTION
FDN, FDT	FOUNDATION
FE	FIRE EXTINGUISHER
FEC	FIRE EXTINGUISHER CABINET
FED	FEDERAL
FF	FINISH FACE, FINISH FLOOR
FF EL	FINISH FLOOR ELEVATION
FF&E	FURNITURE, FIXTURES & EQUIPMENT
FG	FINISHED GRADE
FH	FIRE HOSE
FIN	FINISH
FIN BS	FINISH BOTH SIDE
FIN GR	FINISH GRADE
FIXT	FIXTURE
FL	FLOW LINE
FLA	FULL LOAD AMPERES
FLG	FLOORING
FLMT	FLUSH MOUNT
FLOUR	FLOURESCENT
FLR	FLOOR
FM	FACTORY MUTUAL, FORCE MAIN, FREQUENCY MODULATION
FO	FINISH OPENING
FOC	FACE OF CONCRETE
FOM	FACE OF MASONRY
FOW	FACE OF WALL
FP	FIRE PROTECTION
FSTNR	FASTENER
FTG	FOOTING
FU	FUSE
FURG	FURRING
FURN	FURNITURE
FVNR	FULL VOLTAGE, NON-REVERSING
FWC	FABRIC WALL COVERING
FXTR	FIXTURE
G	
G	GROUND/GROUNDING CONDUCTOR, NATURAL GAS
GA	GAGE OR GAUGE
GALV	GALVANIZED
GB	GRAB BAR, GRADE BEAM
GEN	GENERAL, GENERATOR
GF/CI	GOVERNMENT FURNISHED / CONTRACTOR INSTALLED
GF/GI	GOVERNMENT FURNISHED / GOVERNMENT INSTALLED
GFCI, GFI	GROUND FAULT CIRCUIT INTERRUPTER
GFRG	GLASS-FIBER-REINFORCED GYPSUM REINFORCED GYPSUM
GLZ	GLAZING
GND/GRD	GROUND/GROUNDING
GR	GRADE
GRTG	GRATING
GV	GATE VALVE
GYP BD	GYPSUM BOARD
H	
HB	HOSE BIBB
HC	HANDICAP
HDPE	HIGH DENSITY POLYETHYLENE
HDW	HARDWARE
HDWD	HARDWOOD
HEF	HIGH EXPANSION FOAM
HEPA	HIGH EFFICIENCY PARTICULATE AIR (FILTER)
HH	HANDHOLE
HID	HIGH INTENSITY DISCHARGE
HM	HOLLOW METAL
HMAC	HOT MIX ASPHALT CONCRETE
HOA	HAND-OFF-AUTOMATIC
HORIZ	HORIZONTAL
HP	HIGH POINT, HORSEPOWER
HR	HOUR
HS	HEADED STUD
HSF	HIGH FLOW SILT FENCE
HSS	HOLLOW STRUCTURAL SECTION
HT, H	HEIGHT
HVAC	HEATING VENTILATION & AIR CONDITIONING
HW	HOT WATER
HYDR	HYDRAULIC
HZ	HERTZ
I	
IAP	INITIAL ACCUMULATION POINT
IBC	INTERNATIONAL BUILDING CODE
ID	INTERNAL DIAMETER
IDA	INITIAL DECONTAMINATION AREA
IDS	INTRUSION DETECTION SYSTEM
INCL	INCLUDE
INL	INLET
INT	INTERIOR
INV	INVERT
J	
J-SIIDS	JOINT-SERVICE INTERIOR INTRUSION DETECTION SYSTEM
JAN	JANITOR
JB	JUNCTION BOX
JRCP	JOINT REINFORCED CONCRETE PAVEMENT
JST	JOIST
JT	JOINT
K	
K	KILO, KIPS (1000LBS)
KAIC	KILO AMPERE INTERRUPTING CAPACITY
KCMIL	THOUSAND CIRCULAR MILS

K	
KIT	KITCHEN
KPD	KEYPAD
KV	KILOVOLT
KVA	KILOVOLT-AMPERE
KW	KILOWATT
KWh	KILOWATT HOUR
L	
L	LENGTH
LAM	LAMINATE
LAV	LAVATORY
LB, LBS	POUND
LBP	LEAD BASED PAINT
LBR	LUMBER
LCP	LEAD CONTAINING PAINT, LIGHTING CONTROL PANEL
LDG	LANDING
LE/FE	LOW EMITTING AND FUEL EFFICIENT
LED	LIGHT EMITTING DIODE
LF	LINEAR FEET (LONG)
LFMC	LIQUID-TIGHT FLEXIBLE METAL CONDUIT
LG	LONG
LH	LEFT HAND
LIB	LIBRARY
LIN	LINEAR
LKR	LOCKER
LL	LIVE LOAD
LLH	LONG LEG HORIZONTAL
LLV	LONG LEG VERTICAL
LNDSCP	LANDSCAPE
LOC	LOCATION
LP	LOW POINT
LPS	LITERS PER SECOND
LS	LIME-STABILIZED, LUMP SUM
LSIG	LONG TIME, SHORT TIME, INSTANTANEOUS, GROUND FAULT
LT	LEFT, LIGHT
LTG	LIGHTING
LV	LOW VOLTAGE
LVDR	LOUVER DOOR
LVR	LOUVER
LYR	LAYER
M	
M	METER
M/S	MOTOR STARTER
MACH RM	MACHINE ROOM
MAINT, MX	MAINTENANCE
MAN	MANUAL
MATL	MATERIAL
MAU	MAKE-UP AIR UNIT
MAX	MAXIMUM
MCA	MINIMUM CIRCUIT AMPACITY
MCB	MAIN CIRCUIT BREAKER
MCC	MOTOR CONTROL CENTER
MD	METAL DECK, MOTORIZED DAMPER
MECH	MECHANICAL
MECH RM	MECHANICAL ROOM
MEP	MECHANICAL, ELECTRICAL, PLUMBING
MEZZ	MEZZANINE
MFG, MFR	MANUFACTURER
MGB	MAIN GROUNDING BUSBAR
MH	MANHOLE, MAINTENANCE HOLE
MID	MIDDLE
MIL STD	MILITARY STANDARD
MIN	MINIMUM, MINUTE
MISC	MISCELLANEOUS
MJ	MECHANICAL JOINT
MLDG	MOLDING (MOULDING)
MLO	MAIN LUGS ONLY
MLWK	MILLWORK
mm	MILLIMETER
MNS	MASS NOTIFICATION SYSTEM
MO	MASONRY OPENING
MOD	MODIFY
MOP	MAXIMUM OVERCURRENT PROTECTION
MOT	MOTOR
MP	MAIN PANELBOARD
MSB	MOP SERVICE BASIN
MSD	MAIN SERVICE DISCONNECT
MSE	MAIN SERVICE ENTRANCE
MT	STRUCTURAL TEE CUT FROM MISC STEEL
MTD	MOUNTED
MTG	MOUNTING
MTL	METAL
MW	MICROWAVE, MONITORING WELL
MWP	MEMBRANE WATERPROOFING
N	
N	NORTH (FOR COORDINATES)
N/A	NOT APPLICABLE
NC	NORMALLY CLOSED
NEC	NATIONAL ELECTRICAL CODE
NEMA	NATIONAL ELECTRICAL MANUFACTERERS ASSOCIATION
NF	NEAR FACE, NON-FUSED
NFP	NAVFAC PACIFIC
NFPA	NATIONAL FIRE PROTECTION ASSOCIATION
NFWH	NON-FREEZE WALL HYDRANT
NIC	NOT IN CONTRACT
NL	NIGHT LIGHT
NO	NORMALLY OPEN, NUMBER
NOM	NOMINAL
NP	NO PAINT
NRC	NOISE REDUCTION COEFFICIENT
NS	NARROW STILE, NEAR SIDE
NSB	NORMAL SWITCHBOARD
NTS	NOT TO SCALE

DRAFT 草稿

NUMBERING SYSTEM

DISCIPLINE:
G - GENERAL
V - SURVEY/MAPPING
B - GEOTECHNICAL
C - CIVIL
L - LANDSCAPE
S - STRUCTURAL
A - ARCHITECTURE
I - INTERIORS
F - FIRE PROTECTION
P - PLUMBING
M - MECHANICAL
E - ELECTRICAL
T - TELCOMMUNICATION
R - RESOURCE

SERIES NUMBER
0 - GENERAL
1 - PLANS
2 - ELEVATIONS
3 - SECTIONS
4 - ENLARGED PLANS
5 - DETAILS
6 - SCHEDULES
7 - DIAGRAMS
8 - USER DEFINED
9 - 3D REPRESENTATIONS

G-001

SHEET NUMBER WITHIN SERIES

DRAWING SYMBOLS

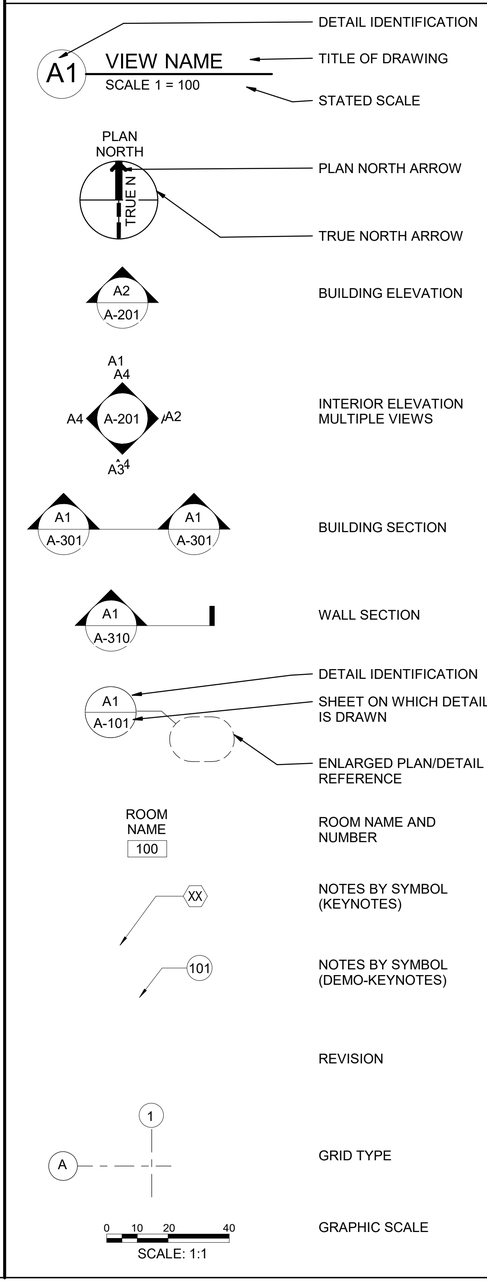

US Army Corps of Engineers
Japan District ®

FOR REVIEW ONLY
THESE DOCUMENTS ARE FOR CONCEPT DESIGN AND NOT INTENDED FOR CONSTRUCTION, BIDDING OR PERMIT PURPOSES. THEY WERE PREPARED BY, OR UNDER SUPERVISION OF:
Christopher M. Surles
NAME
TX 23638 — REGISTRATION #
09/04/2025 — DATE
TEXAS REGISTERED ENGINEERING FIRM F-2966

MARK	DESCRIPTION	DATE
1		

ISSUE DATE: 09/04/2025
SOLICITATION NO.:
CONTRACT NO.:
DRAWING CODE:
DESIGNED BY: CHRIS SURLES
DRAWN BY: LAWRENCE ALON
CHECKED BY: KELVIN CARLSON
SUBMITTED BY: A. GUERRA
SIZE: ISO A1
FILE NAME: G-I002

US ARMY CORPS OF ENGINEERS
JAPAN ENGINEER DISTRICT
OKINAWA, JAPAN

Jacobs
JACOBS GOVERNMENT SERVICES COMPANY
777 MAIN STREET, FORT WORTH, TX 76102
USA

FY25 REPAIR HVAC WIDEBAND SATCOM OPS B100
CAMP BUCKNER COMMUNICATIONS ANNEX
OKINAWA, JAPAN
PROJECT NUMBER:D3449305

DRAWING ABBREVIATIONS AND SYMBOLS

SHEET ID
G-I002

FILE PATH: C:_Revit_Local_Models\2022\D3449305-G-3D_Jake.Metzler.rvt
PLOT DATE: 8/29/2025 10:51:31 AM PLOTTED BY: PLOT SCALE: 1 : 54

BACKCHECK SUBMITTAL DESIGN

DRAWING ABBREVIATIONS

O	
OA	OUTDOOR AIR, OVERALL
OC	ON CENTER
OCEW	ON CENTER EACH WAY
OD	OUTSIDE DIAMETER
OFD	OVERFLOW DRAIN
OFF	OFFICE
OH	OPPOSITE HAND
OH OPT	OPPOSITE HAND OPTIONAL
OHCD	OVERHEAD COILING DOOR
OHE	OVERHEAD ELECTRIC
OHT	OVERHEAD TELEPHONE
OHW	OVERHEAD WIRE
OPP	OPPOSIT
ORD	OVERFLOW ROOF DRAIN
ORIG	ORIGINAL
OS	OCCUPANCY SENSOR
OSP	OUTSIDE PLANT
OWS	OIL/WATER SEPARATOR
OWSJ	OPEN WEB STEEL JOIST
P	
P	PAGE, POLE
P/T	POST-TENSION (-ED, -ING)
PA	PUBLIC ADDRESS
PAT	PATTERN
PB	PULL BOX
PC	POINT OF CURVATURE
PCC	POINT OF COMPOUND CURVATURE, PORTLAND CEMENT CONCRETE, PRECAST CONCRETE
PCF	POUNDS PER CUBIC FOOT
PCT	PERCENT
PDS	PROTECTED DISTRIBUTION SYSTEM
PE	POLYETHYLENE
PEJ	PREMOLDED EXPANSION JOINT
PERF	PERFORATED
PERIM	PERIMETER
PERP	PERPENDICULAR
PF	POWER FACTOR
PG	PLATE GIRDER
PH	PHASE
PI	POINT OF INTERSECTION
PICV	PRESSURE INDEPENDENT CONTROL VALVE
PIL	PILASTER
PIR	PASSIVE INFRARED
PIV	POST INDICATOR VALVE
PL	PLATE, PROPERTY LINE
PL GL	PLATE GLASS
PLAM	PLASTIC LAMINATED
PLAS	PLASTER
PLBG	PLUMBING
PLG	PILING
PLY WD	PLYWOOD
PNEU	PNEUMATIC
PNL	PANEL, PANELBOARD
PORT	PORTABLE
POV	PRIVATELY OWNED VEHICLE
PP	POWER POLE
PP PL	PUSH/PULL PLATE
PR	PAIR, PIPE RAIL
PRCST	PRECAST
PREFAB	PREFABRICATED
PREFIN	PREFINISHED
PRELIM	PRELIMINARY
PRKG	PRKG
PROJ	PROJECT, PROJECTION PRESTRESSED GIRDER
PROT	PROTECTION

P	
PS	PARKING STRUCTURE
PS CONC	PRESTRESSED CONCRETE
PSF	POUNDS PER SQUARE FOOT
PSI	POUNDS PER SQUARE INCH
PT	POINT OF TANGENCY, PORCELAIN TILE, PRESSURE TREATED
PTD	PAPER TOWEL DISPENSER
PTDR	PAPER TOWEL DISPENSER AND RECEPTACLE
PTN	PARTITION
PTR	PAPER TOWEL RECEPTACLE
PVC	POINT OF VERTICAL CURVATURE, POLYVINYL CHLORIDE PIPE, POLYVINYL CHLORIDE
PVI	POINT OF VERTICAL TANGENCY
PVMT	PAVEMENT
PWR	POWER
Q	
QT	QUARRY TILE
QTY	QUANTITY
R	
RA	RETURN AIR
RAD	RADIUS
RB	RESILIENT BASE
RBM	REINFORCED BRICK MASONRY
RBR	RUBBER
RC	REINFORCED CONCRETE
RCP	RECEPTACLE CONTROL PANEL, REFLECTED CEILING PLAN
RD	ROOF DRAIN
RDC	REDUCER
RE, REF	REFER, REFERENCE, REFRIGERATOR
REBAR	REINFORCING STEEL BARS
REC	RECEPTACLE, RECESSED
REC RM	RECREATION ROOM
RECD	RECEIVED
RECT	RECTIFIER
RED	REDUCER
REINF	REINFORCING (-ED, -MENT)
REM	REMOVABLE
REP	REPAIR
REPL	REPLACE
REQ	REQUIRE
REQD	REQUIRED
RESIL	RESILIENT
RESIST	RESISTANT
REST	RESTROOM
RET	RETAINING
REV	REVISION
RF	RESILIENT FLOORING
RFG	ROOFING
RGS	RIGID GALVANIZED STEEL
RH	ROOF HATCH, ROOF HOOD, RIGHT HAND
RHR	RIGHT HAND REVERSE
RL	ROOF LADDER
RLG	RAILING
RM	ROOM
RMC	RIGID METAL CONDUIT
RND	ROUND
RO	ROUGH OPENING
ROW	RIGHT OF WAY
RP	RADIUS POINT
RPM	REVOLUTIONS PER MINUTE
RPZ	REDUCED PRESSURE ZONE
RSD	ROLLING STEEL DOOR
RT	RIGHT
RV	ROOF VENT
RVL	REVEAL

R	
RVTR	RADON VENT THROUGH ROOF
RW	RETAINING WALL
S	
S	SINK, SOUTH (FOR COORDINATES), STANDARD SHAPE
SA	SUPPLY AIR
SAN	SANITARY
SAT	SUSPENDED ACOUSTICAL TILE
SB	SPLASH BLOCK
SC	SEALED CONCRETE, SHEAR CONNECTORS, SLIP CRITICAL
SCD	SEAT COVER DISPENSER
SCHED	SCHEDULE
SCWD	SOLID CORE WOOD DOOR
SD	SMOKE DETECTOR, STORM DRAIN
SDI	STEEL DECK INSTITUTE
SE	SERVICE ENTRANCE
SEC	SECONDARY
SECT	SECTION
SEER	SEASONAL ENERGY EFFICIENT RATIO
SEG	SEGMENT
SEP	SEPARATE
SF	SQUARE FOOT (FEET)
SG	STATIC GROUND
SGL	SINGLE
SH	SHOWER
SHT	SHEET
SHTHG	SHEATHING
SHV	SHELVING
SIM	SIMILAR
SJ	SAW JOINT, SCORED JOINT
SJI	STEEL JOIST INSTITUTE
SKLT	SKYLIGHT
SLNT	SEALANT
SMK	SMOKE
SMLS	SEAMLESS
SND	SANITARY NAPKIN DISPENSER
SP	SINGLE POLE, SUMP PIT
SP EL	SPOT ELEVATION
SP, SPA	SPACE(S
SPD	SURGE PROTECTION DEVICE
SPEC	SPECIFICATION
SQ	SQUARE
SQ IN	SQUARE INCH
SQ YD	SQUARE YARD
SS	STAINLESS STEEL, SANITARY SEWER
ST	SINGLE THROW, STREET, STAIRS, STORAGE TANK
STA	STATION
STC	SOUND TRANSMISSION CLASS
STIFF	STIFFENER
STL	STEEL
STL JST	STEEL JOIST
STL RF DK	STEEL ROOF DECK
STND	STANDARD
STOR	STORAGE
STR	STRINGERS
STRB/HRN	STROBE/HORN
STRUCT	STRUCTURE (-AL)
SUB FL	SUBFLOOR
SV	SHEET VINYL
SVC	SERVICE
SW	SIDEWALK
SW	SWITCH
SYM	SYMBOL
SYMM	SYMMETRICAL

S	
SYS	SYSTEM
T	
T	TANGENT, TREAD
T&B	TOP & BOTTOM
T&G	TONGUE AND GROOVE
T/G	TOP OF GRATE
T/PIPE	TOP OF PIPE
T/S	TUB/SHOWER
TA	TRANSFER AIR
TB	THROUGH BOLT, TOWEL BAR
TBM	TEMPORARY BENCHMARK
TC	TERRA COTTA, TOP OF CURB
TCE	TRICHLOROETHYLENE
TD	TRENCH DRAIN
TEL	TELEPHONE
TEMP	TEMPERATURE, TEMPORARY
TER	TELECOMMUNICATIONS EQUIPMENT ROOM
TERM	TERMINAL
TFF	TOP OF FINISH FLOOR
TGB	TELECOMMUNICATIONS GROUNDING BUSBAR
THK	THICKNESS
THRES	THRESHOLD
TK BD	TACKBOARD
TMGB	TELECOMMUNICATIONS MAIN GROUNDING BUSBAR
TMPD GL	TEMPERED GLASS
TMR	TIMER
TMV	THERMOSTATIC MIXING VALVE
TN	TRUE NORTH
TO	TOP OF
TOC	TABLE OF CONTENT, TOP OF CONCRETE
TOPO	TOPOGRAPHY
TOS	TOP OF SLAB, TOP OF STEEL
TP	TOP OF PAVEMENT
TPD	TOILET PAPER DISPENSER
TR	TELEPHONE ROOM
TRANS	TRANSOM
TRTD	TREATED
TS	TUBE STEEL
TSTAT	THERMOSTAT
TV	TELEVISION
TW	TILT WALL, TOP OF WALL
TYP	TYPICAL
U	
U/G	UNDERGROUND
UC	UNDERGROUND CONDUIT
UGC	UNDERGROUND CABLE
UGE	UNDERGROUND ELECTRIC
UGT	UNDERGROUND TELEPHONE
UH	UNIT HEATER
UL	UNDERWRITER'S LABORATORIES
UNK	UNKNOWN
UON	UNLESS OTHERWISE NOTED
UPS	UNINTERRUPTED POWER SUPPLY
V	
V	VENT, VOLT
V/PH/HZ	VOLT/PHASE/FREQUENCY
VA	VOLT-AMPERE
VAC	VACUMM
VAR	VARIES
VAV	VARIABLE AIR VOLUME
VB	VINYL COMPOSITION TILE
VC	VERTICAL CURVE
VD	VOLUME DAMPER

V	
VERT	VERTICAL
VFD	VARIABLE FREQUENCY DRIVE
VFI	VACUUM FAULT INTERRUPTER
VIF	VERIFY IN FIELD
VOL	VOLUME
VP	VACUMM PUMP FOR RADIANT HEATER
VTR	VENT THROUGH ROOF
VWF	VINYL WALL FABRIC
W	
W	WATER, WATT, WEST (FOR COORDINATES), WIDE, WIDE FLANGE, WIDTH
W/	WITH
W/O	WITHOUT
WB	WALL BOX, WET BULB
WC	WATER CLOSET
WCO	WALL CLEANOUT
WD	WOOD
WDW	WINDOW
WGL	WIRED GLASS
WH	WALL HUNG, WATER HEATER
WHM	KILOWATT-HOUR METER
WL	WATER LINE
WP	WEATHERPROOF, WORK POINT
WPJ	WEAKENED PLANE JOINT
WSCT	WAINSCOT
WT	HECTARE
WT	STRUCTURAL TEE CUT FROM WIDE FLANGE BEAM, WEIGHT
WV	WATER VALVE
WWF	WELDED WIRE FABRIC
X	
XFMR	TRANSFORMER
XFR	TRANSFER
XPS	EXTRUDED POLYSTYRENE BOARD (INSULATION)
Y	
Y	YARD
Z	
Z	IMPEDANCE

草稿

US Army Corps of Engineers
Japan District ®

FOR REVIEW ONLY
THESE DOCUMENTS ARE FOR CONCEPT DESIGN AND NOT INTENDED FOR CONSTRUCTION BIDDING OR PERMIT PURPOSES. THEY WERE PREPARED BY, OR UNDER SUPERVISION OF:
Christopher M. Surles
NAME
TX 23638 09/04/2025
REGISTRATION # DATE
TEXAS REGISTERED ENGINEERING FIRM F-2966

MARK	DESCRIPTION	DATE

ISSUE DATE: 09/04/2025
SOLICITATION NO.: -
CONTRACT NO.: -
DRAWING CODE:

DESIGNED BY: CHRIS SURLES
DRAWN BY: LANDON FALLON
CHECKED BY: KELVIN CARLSON
SUBMITTED BY: A. GUERRA
SIZE: ISO A1
FILE NAME: G-I003

US ARMY CORPS OF ENGINEERS
JAPAN ENGINEER DISTRICT
OKINAWA, JAPAN

Jacobs
JACOBS GOVERNMENT SERVICES COMPANY
777 MAIN STREET, FORT WORTH, TX 76102
USA

FY25 REPAIR HVAC WIDEBAND SATCOM OPS B100
CAMP BUCKNER COMMUNICATIONS ANNEX
OKINAWA, JAPAN
PROJECT NUMBER:D3449305

DRAWING ABBREVIATIONS AND SYMBOLS

SHEET ID
G-I003

FILE PATH: C:_Revit_Local_Models\2022\D3449305-G-3D_Jake.Metzler.rvt
PLOT DATE: 8/29/2025 10:51:31 AM PLOTTED BY: PLOT SCALE: 1 : 54

BACKCHECK SUBMITTAL DESIGN

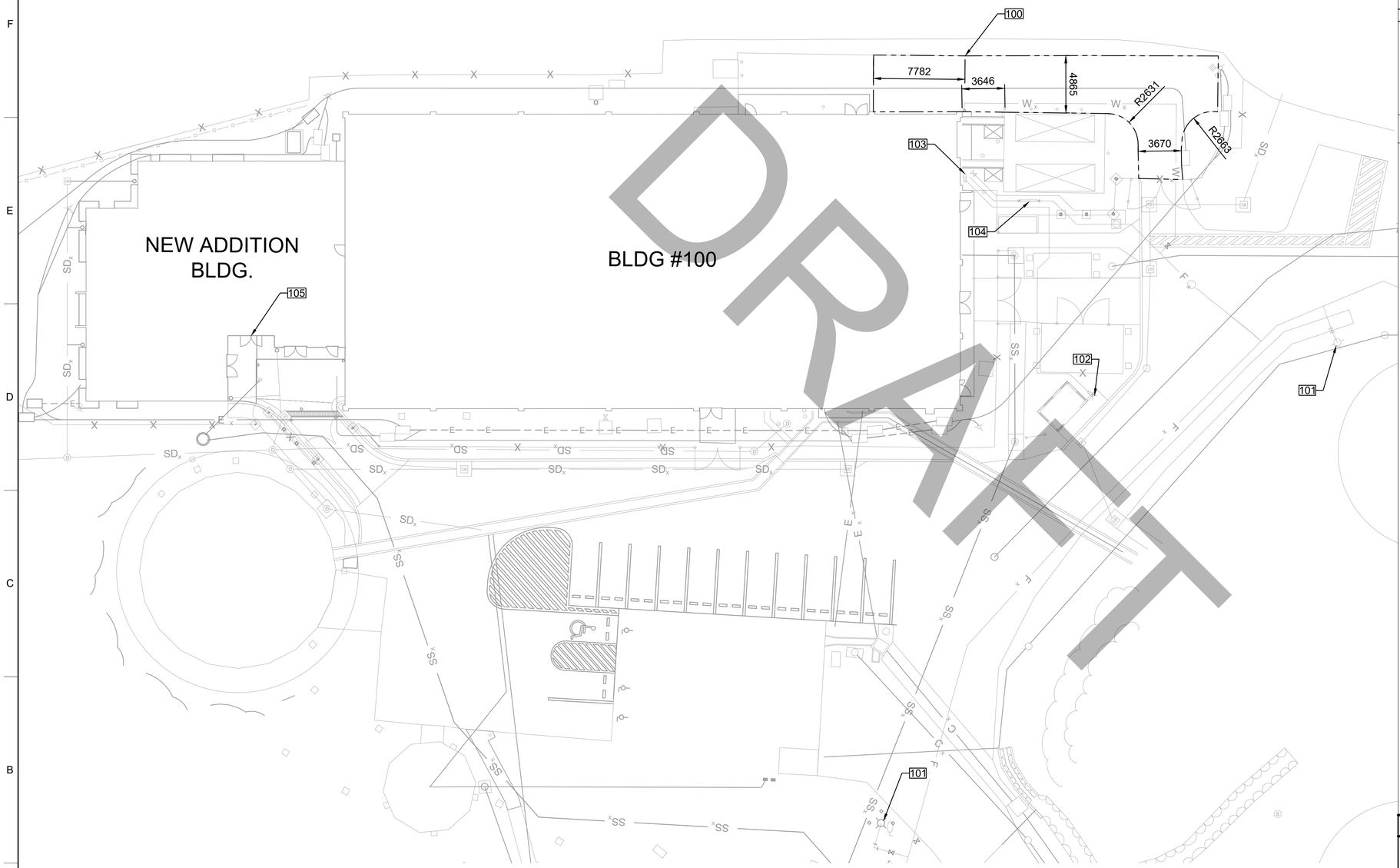

A1 CODE COMPLIANCE PLAN
1 : 200

GENERAL NOTES

A	REFER TO ARCHITECTURAL PLANS FOR BUILDING DIMENSIONS

SHEET KEYNOTES

100	FIRE LANE
101	EXISTING FIRE HYDRANT
102	EXISTING FIRE DEPARTMENT CONNECTION
103	EXISTING FIRE RISER
104	EXISTING BACKFLOW PREVENTER
105	PRIMARY FIRE DEPARTMENT ACCESS

LEGEND

- EXISTING WATER MAIN LINE
- EXISTING FIRE PROTECTION WATER SUPPLY LINE
- EXISTING GATE VALVE
- EXISTING FIRE RISER
- EXISTING FIRE DEPARTMENT CONNECTION (FDC)
- EXISTING FIRE HYDRANT
- FIRE LANE
- EXISTING BACKFLOW PREVENTER

KEY PLAN

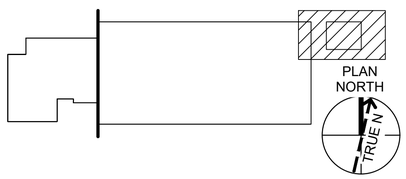

GRAPHIC SCALE(S)

0 4000 8000
SCALE: 1:200

US Army Corps of Engineers
Japan District ®

FOR REVIEW ONLY

THESE DOCUMENTS ARE FOR CONCEPT DESIGN AND NOT INTENDED FOR CONSTRUCTION BIDDING OR PERMIT PURPOSES. THEY WERE PREPARED BY, OR UNDER SUPERVISION OF:

LISA M. HEROUX
NAME

TX 156321 — REGISTRATION #
09/04/2025 — DATE

TEXAS REGISTERED ENGINEERING FIRM F-2966

MARK	DESCRIPTION	DATE

ISSUE DATE: 09/04/2025
SOLICITATION NO.:
CONTRACT NO.:
DRAWING CODE:

DESIGNED BY: L. HEROUX
DRAWN BY: B. CARDELLA
CHECKED BY: D. GIMBEL
SUBMITTED BY: A. GUERRA
SIZE: ISO A1
FILE NAME: GI110

US ARMY CORPS OF ENGINEERS
JAPAN ENGINEER DISTRICT
OKINAWA, JAPAN

Jacobs
JACOBS GOVERNMENT SERVICES COMPANY
777 MAIN STREET, CORPUS CHRISTI, TX 78102
USA

FY25 REPAIR HVAC WIDEBAND SATCOM OPS B100
CAMP BUCKNER COMMUNICATIONS ANNEX
OKINAWA, JAPAN
PROJECT NUMBER:D3449305

CODE COMPLIANCE PLAN

SHEET ID

GI110

FILE PATH: C:_Revit_Local_Models\2022\D3449305-G-3D_lamont.fallon.rvt
PLOT DATE: 3/11/2025 10:13:38 AM PLOTTED BY: PLOT SCALE:

BACKCHECK SUBMITTAL DESIGN

GENERAL NOTES - PHASING PLANS

A	COORDINATE WITH THE CONTRACTING OFFICER FOR SEQUENCING OF WORK WITHIN EACH PHASING AREA. CONSTRUCTION PHASING PLAN IS INTENDED TO IDENTIFY SEPARATE AREAS OF WORK AND NOT MANDATORY SEQUENCING OF WORK. AREAS A AND B REQUIRE EXTENSIVE PLANNING AND SEQUENCING OF WORK REQUIRING REVIEW AND APPROVAL BY THE A/E PRIOR TO CONSTRUCTION WITHIN THESE AREAS.
B	PHASING DRAWINGS PROVIDE A PROPOSED SEQUENCE OF WORK, LEVEL OF PROTECTION, AND ASSOCIATED SEPARATION FROM OCCUPIED PORTIONS OF BUILDING 100. FINAL LOCATIONS OF CONSTRUCTION TRAILERS AND LAYDOWN ZONES ARE TO BE APPROVED BY THE CONTRACTING OFFICER.
C	CONSTRUCT TEMPORARY WORK DEMARCATION WALLS PRIOR TO COMMENCEMENT OF CONSTRUCTION WITHIN AREA A AND AREA B AS REQUIRED.
D	PREPARE AND SUBMIT A SAFETY PLAN COMPLIANCE DOCUMENT PRIOR TO COMMENCEMENT OF CONSTRUCTION.
E	COORDINATE SECURITY AT DESIGNATED TIMES AND UNDER SPECIAL CONDITIONS AS DIRECTED BY CONTRACTING OFFICER.
F	COORDINATE TEMPORARY FACILITIES/ PARKING OF ANY DISPLACED PERSONNEL AS DIRECTED BY CONTRACTING OFFICER IF REQUIRED.
G	COORDINATE WORK OF MECHANICAL, ELECTRICAL, PLUMBING, STRUCTURAL, FIRE PROTECTION, COMMUNICATIONS, AND SECURITY DESIGN, AS WELL AS MATERIAL FINISH SELECTIONS IN THE VARIOUS WORK AREAS.
H	REFER TO SPECIFICATION 01 35 26 – GOVERNMENTAL SAFETY REQUIREMENTS FOR ALL SYSTEM OUTAGES. COORDINATE BUILDING OUTAGES WITH BUILDING OWNER.
J	FIRE PROTECTION SYSTEM SHUT DOWN MUST BE HANDLED IN ACCORDANCE WITH NFPA 25 AND COORDINATED WITH THE BASE FIRE DEPARTMENT PRIOR TO ANY SHUT DOWNS.
K	BUILDING TO REMAIN OPERATIONAL 24/7 DURING CONSTRUCTION. ALL WORK MUST BE COORDINATED AROUND THE EXISTING FUNCTIONS AND ACTIVITIES TO MINIMIZE DISTURBANCES.

ELECTRICAL NOTES - PHASE 1

A	DEMOLISH DISCONNECT SWITCHES, CABLES, CONDUITS, AND DISCONNECTING MEANS ASSOCIATED WITH MECHANICAL EQUIPMENT TO BE DEMOLISHED IN PHASE 1.
B	INSTALL CABLE AND CONDUIT ASSOCIATED WITH NEW MECHANICAL EQUIPMENT PRIOR TO DENERGIZING PANELBOARD OR MOTOR CONTROL CENTER.
C	INSTALL DISCONNECTS SWITCHES ASSOCIATED WITH NEW MECHANICAL EQUIPMENT TO BE INSTALLED IN PHASE 1. COORDINATE DOWNTIME WITH BUILDING OWNER.

TELECOM NOTES - PHASE 1

A	PROTECT NETWORK AND MONITORING CONNECTIONS SUPPORTING MECHANICAL AND ELECTRICAL DURING DEMOLITION
B	PROVIDE NETWORK CONNECTIONS FOR MECHANICAL MONITORING EQUIPMENT AS NEEDED AND COORDINATE WITH EQUIPMENT PROVIDER. NETWORK CONNECTIONS FOR PHASE 1 & 2 WORK ORIGINATE FROM THE COMMUNICATIONS CABINET LOCATED IN ROOM ISSO OFFICE 111. OR COMM RM 117

STRUCTURAL NOTES - PHASE 1

A	COORDINATE REPAIR OF MISCELLANEOUS CRACKS AND SPALLS IN THE CONCRETE WALLS AND SLABS WITH THE OVERALL ELECTRICAL AND MECHANICAL WORK.

MECHANICAL NOTES - PHASE 1

A	REMOVE EXISTING CHILLER 2, CHILLED WATER PUMP 2, CONDENSING UNIT 2, AND ALL ASSOCIATED PIPING AND APPURTENANCES. CLEAN AND PREPARE AREAS FOR NEW CONSTRUCTION. INSTALL CHILLER 2, CHILLED PUMP 2, CONDENSING UNIT 2, AND CHILLED WATER PIPING LOOP THROUGHOUT AREA B.
B	REMOVE EXISTING CRAC UNITS AND ALL ASSOCIATED PIPING AND APPURTENANCES. CLEAN AND PREPARE AREAS FOR NEW CONSTRUCTION AND INSTALL CRAC UNITS THROUGHOUT AREA B.
C	REMOVE EXISTING VAV AHU UNITS AND ALL ASSOCIATED PIPING AND APPURTENANCES. CLEAN AND PREPARE AREAS FOR NEW CONSTRUCTION AND INSTALL VAV AHU.
D	REMOVE EXISTING DOAS UNIT AND ALL ASSOCIATED PIPING AND APPURTENANCES. CLEAN AND PREPARE AREAS FOR NEW CONSTRUCTION AND INSTALL DOAS UNIT.
E	REMOVE EXISTING BREAKROOM SPLIT SYSTEM AND ALL ASSOCIATED PIPING AND APPURTENANCES. CLEAN AND PREPARE AREAS FOR NEW CONSTRUCTION AND INSTALL BREAKROOM SPLIT SYSTEM.
F	REMOVE EXISTING ENTRY FCU AND ALL ASSOCIATED PIPING AND APPURTENANCE. CLEAN AND PREPARE AREAS FOR NEW CONSTRUCTION AND INSTALL ENTRY FCU.

FIRE PROTECTION NOTES - PHASE 1

A	INSTALL NEW SPEAKERS FOR OCCUPANT MASS NOTIFICATION THROUGHOUT.
B	INSTALL NEW WIRING AND DEVICES FOR MONITORING AND CONTROL FOR NEW HVAC EQUIPMENT FOR SMOKE CONTROL.

ARCHITECTURAL NOTES - PHASE 1

A	CONSTRUCTION OF AREA B PHASE 1 MUST NOT COMMENCE UNTIL PERMANENT CONSTRUCTION MATERIALS AND EQUIPMENT ARE ON SITE AND VERIFIED BY CONTRACTING OFFICER.
B	AREA B PHASE 1 WILL INCLUDE: AREA AS INDICATED ON SHEET GI010/A1 AND ANY ASSOCIATED ITEMS REQUIRED TO COMPLETE PHASE 1 IN ITS ENTIRETY. COORDINATE FULL SCOPE AMONGST ALL DISCIPLINES.
C	PERFORM DEMOLITION WORK AS DESCRIBED IN THE DEMOLITION PLANS ON SHEETS AD101-AD131 WITHIN THE AREAS DEFINED UNDER PHASE 1, AREA B.
D	RENOVATIONS TO THE ARCHITECTURAL AND INTERIOR DESIGN ELEMENTS, ELECTRICAL, FIRE PROTECTION, AND PLUMBING SYSTEMS WILL BE COMPLETED TO THE EXTENT REQUIRED TO RETURN THE ROOMS TO A COMPLETE AND FINISHED CONDITION.
E	VESTIBULE 107 AND TOILET IN AREA B TO BE RENOVATED TO COMPLY WITH ACCESSIBILITY STANDARDS PER ARCHITECTURAL BARRIERS ACT (ABA) STANDARDS 2015 AND INTERNATIONAL BUILDING CODE (IBC) 2024. REFER DEMOLITION SHEETS AD101-AD131 AND PLAN SHEETS AE101-AE131.
F	COORDINATE WITH THE CONTRACTING OFFICER FOR LOCATION OF TEMPORARY BARRIER PARTITION AS REQUIRED FOR RENOVATION WORK

DRAFT

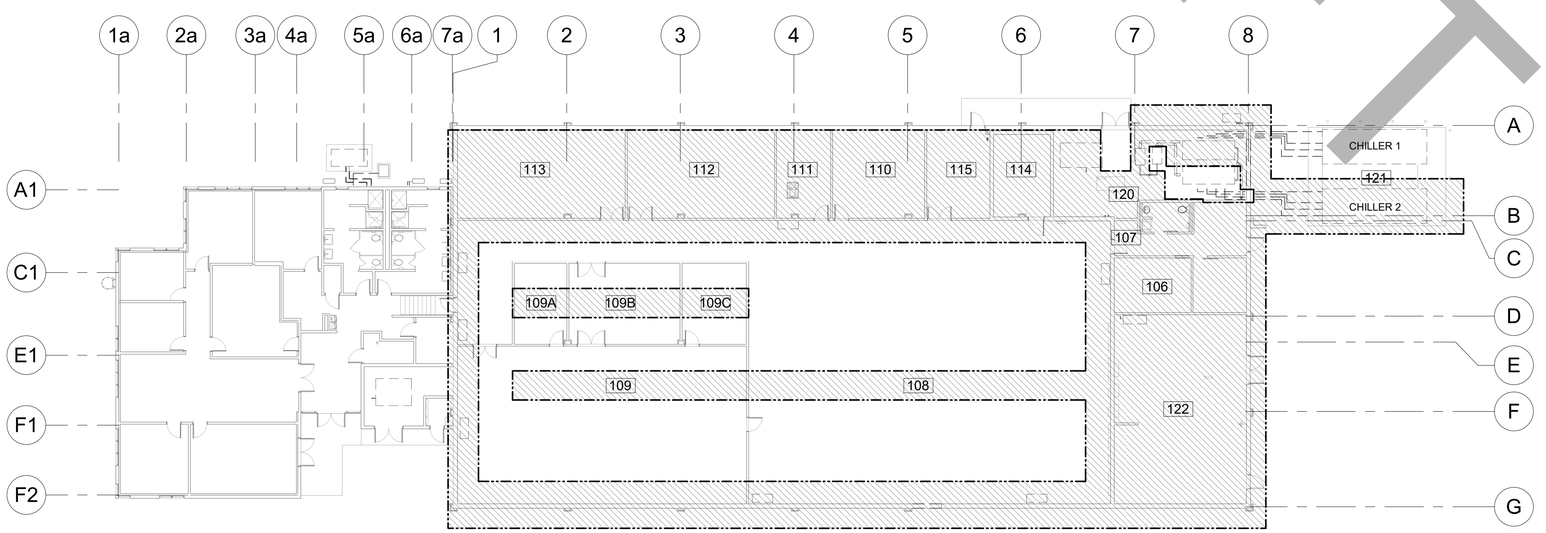

A1 OVERALL PHASING PLAN - PHASE 1

1 : 200

OVERALL PHASING PLAN LEGEND

PHASE 1

KEY PLAN

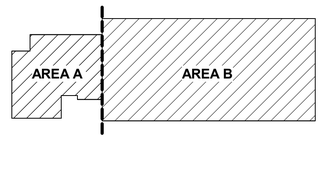

GRAPHIC SCALE(S)

0 4000 8000

SCALE: 1:200

US Army Corps of Engineers
Japan District ®

FOR REVIEW ONLY

THESE DOCUMENTS ARE FOR CONCEPT DESIGN AND NOT INTENDED FOR CONSTRUCTION, BIDDING OR PERMIT PURPOSES. THEY WERE PREPARED BY, OR UNDER SUPERVISION OF:

Christopher M. Surles
NAME

TX 23638 09/04/2025
REGISTRATION # DATE

TEXAS REGISTERED ENGINEERING FIRM F-2966

MARK	DESCRIPTION	DATE

ISSUE DATE: 09/04/2025
SOLICITATION NO.:
CONTRACT NO.:
DRAWING CODE:

DESIGNED BY: C.SURLES
DRAWN BY: J.METZLER
CHECKED BY: K.CARLSON
SUBMITTED BY: A.GUERRA
SIZE: ISO A1
FILE NAME: GI010

US ARMY CORPS OF ENGINEERS
JAPAN ENGINEER DISTRICT
OKINAWA, JAPAN

Jacobs
JACOBS GOVERNMENT SERVICES COMPANY
777 MAIN STREET, FORT WORTH, TX 76102
USA

FY25 REPAIR HVAC WIDEBAND SATCOM OPS B100
CAMP BUCKNER COMMUNICATIONS ANNEX
OKINAWA, JAPAN
PROJECT NUMBER:D3449305

OVERALL PHASING PLAN - PHASE 1

SHEET ID

GI010

GI GI010-

FILE PATH: C:_Revit_Local_Models\2022\D3449305-A-3D_Jake.Metzler.rvt
PLOT DATE: 8/29/2025 9:56:37 AM PLOTTED BY: PLOT SCALE: As indicated

BACKCHECK SUBMITTAL DESIGN

GENERAL NOTES - PHASING PLANS

A	COORDINATE WITH THE CONTRACTING OFFICER FOR SEQUENCING OF WORK WITHIN EACH PHASING AREA. CONSTRUCTION PHASING PLAN IS INTENDED TO IDENTIFY SEPARATE AREAS OF WORK AND NOT MANDATORY SEQUENCING OF WORK. AREAS A AND B REQUIRE EXTENSIVE PLANNING AND SEQUENCING OF WORK REQUIRING REVIEW AND APPROVAL BY THE A/E PRIOR TO CONSTRUCTION WITHIN THESE AREAS.
B	PHASING DRAWINGS PROVIDE A PROPOSED SEQUENCE OF WORK, LEVEL OF PROTECTION, AND ASSOCIATED SEPARATION FROM OCCUPIED PORTIONS OF BUILDING 100. FINAL LOCATIONS OF CONSTRUCTION TRAILERS AND LAYDOWN ZONES ARE TO BE APPROVED BY THE CONTRACTING OFFICER.
C	CONSTRUCT TEMPORARY WORK DEMARCATION WALLS PRIOR TO COMMENCEMENT OF CONSTRUCTION WITHIN AREA A AND AREA B AS REQUIRED.
D	PREPARE AND SUBMIT A SAFETY PLAN COMPLIANCE DOCUMENT PRIOR TO COMMENCEMENT OF CONSTRUCTION.
E	COORDINATE SECURITY AT DESIGNATED TIMES AND UNDER SPECIAL CONDITIONS AS DIRECTED BY CONTRACTING OFFICER.
F	COORDINATE TEMPORARY FACILITIES/ PARKING OF ANY DISPLACED PERSONNEL AS DIRECTED BY CONTRACTING OFFICER IF REQUIRED.
G	COORDINATE WORK OF MECHANICAL, ELECTRICAL, PLUMBING, STRUCTURAL, FIRE PROTECTION, COMMUNICATIONS, AND SECURITY DESIGN, AS WELL AS MATERIAL FINISH SELECTIONS IN THE VARIOUS WORK AREAS.
H	REFER TO SPECIFICATION 01 35 26 – GOVERNMENTAL SAFETY REQUIREMENTS FOR ALL SYSTEM OUTAGES. COORDINATE BUILDING OUTAGES WITH BUILDING OWNER.
J	FIRE PROTECTION SYSTEM SHUT DOWN MUST BE HANDLED IN ACCORDANCE WITH NFPA 25 AND COORDINATED WITH THE BASE FIRE DEPARTMENT PRIOR TO ANY SHUT DOWNS.
K	BUILDING TO REMAIN OPERATIONAL 24/7 DURING CONSTRUCTION. ALL WORK MUST BE COORDINATED AROUND THE EXISTING FUNCTIONS AND ACTIVITIES TO MINIMIZE DISTURBANCES.

ELECTRICAL NOTES - PHASE 2 & 3

A	DEMOLISH DISCONNECT SWITCHES, CABLES, CONDUITS, AND DISCONNECTING MEANS ASSOCIATED WITH MECHANICAL EQUIPMENT TO BE DEMOLISHED IN PHASE 2.
B	INSTALL CABLES AND CONDUITS ASSOCIATED WITH NEW MECHANICAL EQUIPMENT PRIOR TO DENERGIZING PANELBOARD OR MOTOR CONTROL CENTER.
C	INSTALL DISCONNECT SWITCHES ASSOCIATED WITH NEW MECHANICAL EQUIPMENT TO BE INSTALLED IN PHASE 2. COORDINATE DOWNTIME WITH BUILDING OWNER.
D	DEMOLISH DISCONNECT SWITCHES, CABLE, CONDUIT, AND DISCONNECTING MEANS ASSOCIATED WITH MECHANICAL EQUIPMENT TO BE DEMOLISHED IN PHASE 3.
E	DEMOLISH LIGHTING AND ASSOCIATED CABLE AND CONDUIT IN AREAS WHERE THE CEILING IS AFFECTED BY MECHANICAL WORK.
F	INSTALL DISCONNECT SWITCHES ASSOCIATED WITH NEW MECHANICAL EQUIPMENT TO BE INSTALLED IN PHASE 3. COORDINATE DOWNTIME WITH BUILDING OWNER.
G	INSTALL NEW LIGHTING, RE-WIRE WITH NEW CABLE AND CONDUIT.

TELECOM NOTES - PHASE 2 & 3

A	PROTECT NETWORK AND MONITORING CONNECTIONS SUPPORTING MECHANICAL AND ELECTRICAL DURING DEMOLITION
B	PROVIDE NETWORK CONNECTIONS FOR MECHANICAL MONITORING EQUIPMENT AS NEEDED, AND COORDINATE WITH EQUIPMENT PROVIDER. NETWORK CONNECTIONS FOR PHASE 1 & 2 WORK ORIGINATE FROM THE COMMUNICATIONS CABINET LOCATED IN ROOM ISSO OFFICE 111 OR COMM RM 117
C	PROVIDE NETWORK CONNECTIONS FOR MECHANICAL MONITORING EQUIPMENT AS NEEDED, AND COORDINATE WITH EQUIPMENT PROVIDER. NETWORK CONNECTIONS FOR PHASE 3 WORK ORIGINATE FROM THE TWO POST COMMUNICATIONS RACK LOCATED IN ISSO OFFICE 111.

MECHANICAL NOTES - PHASE 2 & 3

A	REMOVE EXISTING CHILLER 1, CHILLED PUMP 1, CONDENSING UNIT 1, AND ALL ASSOCIATED PIPING AND APPURTENANCES. CLEAN AND PREPARE AREAS FOR NEW CONSTRUCTION. INSTALL CHILLER 1, CHILLED PUMP 1, AND CONDENSING UNIT 1.
B	CONTRACTOR TO TEST AND BALANCE THE EXISTING AIRFLOWS AS A BASELINE FOR THE NEW EQUIPMENT. SUBMIT A CERTIFIED TAB REPORT IN ACCORDANCE WITH SPEC 23 05 93.
C	REMOVE EXISTING AHU AND ALL ASSOCIATED PIPING AND APPURTENANCES. CLEAN AND PREPARE AREAS FOR NEW CONSTRUCTION AND INSTALL AHU.
D	REMOVE EXISTING DOAS UNIT AND ALL ASSOCIATED PIPING AND APPURTENANCES. CLEAN AND PREPARE AREAS FOR NEW CONSTRUCTION AND INSTALL DOAS UNIT.
E	REMOVE EXISTING CONFERENCE ROOM 104 SPLIT SYSTEM AND ALL ASSOCIATED PIPING AND APPURTENANCES. CLEAN AND PREPARE AREAS FOR NEW CONSTRUCTION AND INSTALL CONFERENCE ROOM 104 SPLIT SYSTEM.
F	REMOVE EXISTING COMM ROOM MINI SPLIT AND ALL ASSOCIATED PIPING AND APPURTENANCES. CLEAN AND PREPARE AREAS FOR NEW CONSTRUCTION AND INSTALL COMM ROOM MINI SPLIT.
G	REMOVE EXISTING EXHAUST FANS AND ASSOCIATED APPURTENANCES. CLEAN AND PREPARE AREAS FOR NEW CONSTRUCTION AND INSTALL EXHAUST FANS.
H	REMOVE EXISTING REFRIGERANT PIPING. CLEAN AND PREPARE AREAS FOR NEW CONSTRUCTION AND INSTALL REFRIGERANT PIPING THROUGHOUT AREA A. REFER MECHANICAL SHEETS.

FIRE PROTECTION NOTES - PHASE 2 & 3

A	DEMOLISH EXISTING WAVES MASS NOTIFICATION SYSTEM AND INSTALL NEW SPEAKERS FOR OCCUPANT MASS NOTIFICATION THROUGHOUT.
B	CONNECT NEW SPEAKERS TO EXISTING MONACO FACP TO CREATE COMBINATION FIRE ALARM/MASS NOTIFICATION SYSTEM.
C	PERFORM INTEGRATED TESTING TO CONFIRM FUNCTIONALITY WITH NEW HVAC EQUIPMENT AND FIRE ALARM EQUIPMENT.

ARCHITECTURAL NOTES - PHASE 2 & 3

A	CONSTRUCTION OF AREAS A AND B FOR PHASE 2 & 3 MUST NOT COMMENCE UNTIL PERMANENT CONSTRUCTION MATERIALS AND EQUIPMENT ARE ON SITE AND VERIFIED BY CONTRACTING OFFICER.
B	AREA B PHASE 2 WILL INCLUDE: AREA AS INDICATED ON SHEET GI011/A1 AND ANY ASSOCIATED ITEMS REQUIRED TO COMPLETE PHASE 2 IN ITS ENTIRETY. COORDINATE FULL SCOPE AMONGST ALL DISCIPLINES.
C	AREA A PHASE 3 WILL INCLUDE: AREA AS INDICATED ON SHEET GI011/A1 AND ANY ASSOCIATED ITEMS REQUIRED TO COMPLETE PHASE 3 IN ITS ENTIRETY. COORDINATE FULL SCOPE AMONGST ALL DISCIPLINES.
D	PERFORM DEMOLITION WORK AS DESCRIBED IN THE DEMOLITION PLANS ON SHEETS AD101-AD131 WITHIN THE AREAS DEFINED UNDER PHASE 2 & 3, AREA A AND AREA B.
E	RENOVATIONS TO THE ARCHITECTURAL AND INTERIOR DESIGN ELEMENTS, ELECTRICAL, FIRE PROTECTION, AND PLUMBING SYSTEMS WILL BE COMPLETED TO THE EXTENT REQUIRED TO RETURN THE ROOMS TO A COMPLETE AND FINISHED CONDITION.
F	COORDINATE WITH THE CONTRACTING OFFICER FOR LOCATION OF TEMPORARY BARRIER PARTITION AS REQUIRED FOR RENOVATION WORK

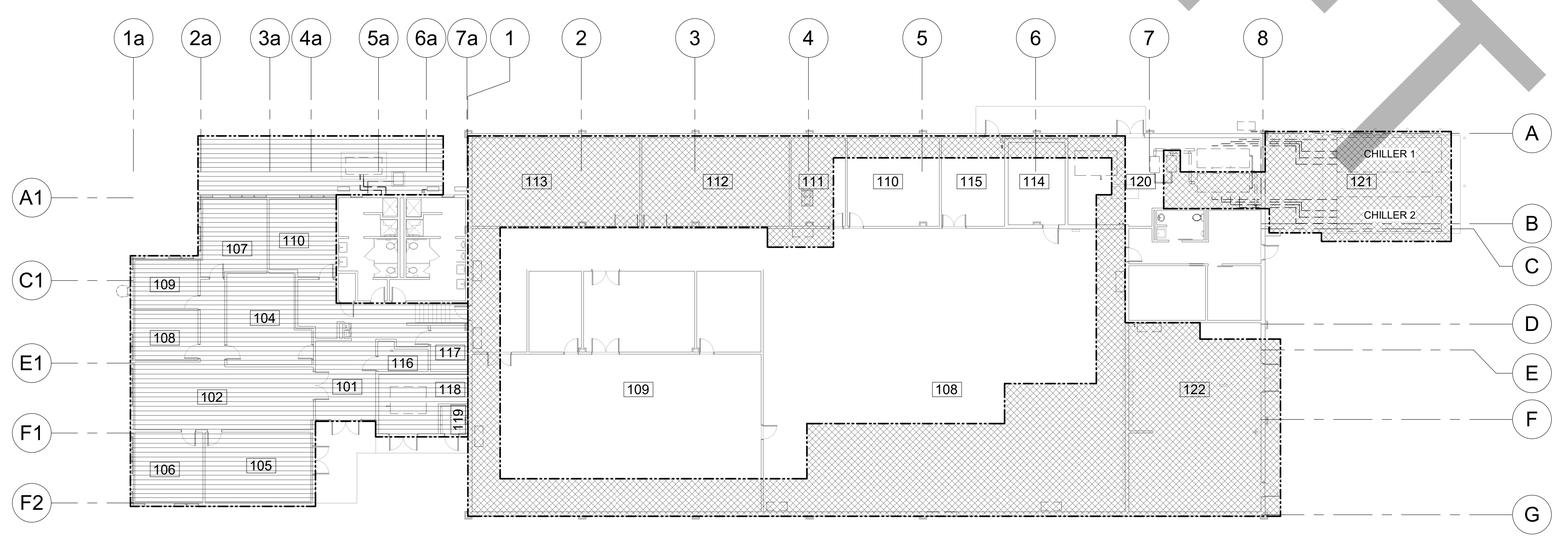

A1 OVERALL PHASING PLAN - PHASE 2 & 3
1 : 200

OVERALL PHASING PLAN LEGEND

PHASE 2

PHASE 3

KEY PLAN

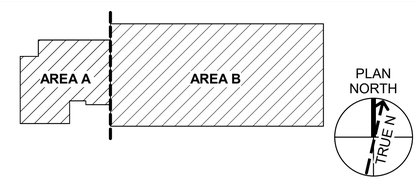

GRAPHIC SCALE(S)

0 4000 8000
SCALE: 1:200

US Army Corps of Engineers
Japan District ®

FOR REVIEW ONLY

THESE DOCUMENTS ARE FOR CONCEPT DESIGN AND NOT INTENDED FOR CONSTRUCTION, BIDDING OR PERMIT PURPOSES. THEY WERE PREPARED BY, OR UNDER SUPERVISION OF:

Christopher M. Surles
NAME
TX 23638 09/04/2025
REGISTRATION # DATE
TEXAS REGISTERED ENGINEERING FIRM F-2966

MARK	DESCRIPTION	DATE

US ARMY CORPS OF ENGINEERS
JAPAN ENGINEER DISTRICT
OKINAWA, JAPAN

Jacobs
JACOBS GOVERNMENT SERVICES COMPANY
777 MAIN STREET, FORT WORTH, TX 76102
USA

DESIGNED BY: C.SURLES
DRAWN BY: J. METZLER
CHECKED BY: K. CARLSON
SUBMITTED BY: A. GUERRA
SIZE: ISO A1
ISSUE DATE: 09/04/2025
SOLICITATION NO.:
CONTRACT NO.:
DRAWING CODE:
FILE NAME: GI011

FY25 REPAIR HVAC WIDEBAND SATCOM OPS B100
CAMP BUCKNER COMMUNICATIONS ANNEX
OKINAWA, JAPAN
PROJECT NUMBER:D3449305

OVERALL PHASING PLAN - PHASE 2 & 3

SHEET ID
GI011

DRAFT

FILE PATH: C:_Revit_Local_Models\2022\D3449305-A-3D_Jake.Metzler.rvt
PLOT DATE: 8/29/2025 9:56:41 AM PLOTTED BY: PLOT SCALE: As indicated

BACKCHECK SUBMITTAL DESIGN

SATCOM - IBC SUMMARY

APPLICABLE CODES AND STANDARDS	EDITION
UFC 1-200-01 - DoD BUILDING CODE	CHANGE 3, 2024
UFC 3-600-01 - FIRE PROTECTION ENGINEERING FOR FACILITIES	CHANGE 6, 2021
UFC 4-010-01 - DoD MINIMUM ANTITERRORISM STANDARDS FOR BUILDINGS	CHANGE 3, 2024
UFC 4-021-01 - DESIGN AND O&M: MASS NOTIFICATION SYSTEMS	CHANGE 1, 2010
NFPA 1 - FIRE CODE	2024
NFPA 10 - STANDARD FOR PORTABLE FIRE EXTINGUISHERS	2022
NFPA 13 - STANDARD FOR THE INSTALLATION OF SPRINKLER SYSTEMS	2025
NFPA 70 - NATIONAL ELECTRICAL CODE	2023
NFPA 72 - NATIONAL FIRE ALARM AND SIGNALING CODE	2025
NFPA 80 - STANDARD FOR FIRE DOORS AND OTHER OPENING PROTECTIVES	2025
NFPA 90A - STANDARD FOR THE INSTALLATION OF AIR-CONDITIONING AND VENTILATING SYSTEMS	2024
NFPA 101 - LIFE SAFETY CODE (LSC)	2024
NFPA 220 - STANDARD ON TYPES OF BUILDING CONSTRUCTION	2024
NFPA 291 - RECOMMENDED PRACTICE FOR FIRE FLOW TESTING AND MARKING OF HYDRANTS	2025
INTERNATIONAL BUILDING CODE (IBC)	2024
USACE JAPAN DISTRICT DESIGN GUIDE	2024
USACE JAPAN EDITED SPECIFICATIONS (JES)	

IBC OCCUPANCY CLASSIFICATION

NON-SEPARATED MIXED USE OCCUPANCY IN ACCORDANCE WITH IBC §508.3

FIRST FLOOR
GROUP B, BUSINESS
GROUP S-1, STORAGE

SMALL ASSEMBLY SPACES WITH OCCUPANT LOADS LESS THAN 50 PERSONS AND ACCESSORY TO THE MAIN OCCUPANCY OR ROOMS/SPACES LESS THAN 750 FT² IN AREA AND ACCESSORY TO ANOTHER OCCUPANCY WILL BE CLASSIFIED AS A GROUP B OCCUPANCY OR AS PART OF THE ASSOCIATED OCCUPANCY IN ACCORDANCE WITH IBC §303.1.2. ROOMS OR SPACES USED FOR STORAGE PURPOSES THAT ARE ACCESSORY TO ANOTHER OCCUPANCY WILL BE CLASSIFIED AS PART OF THAT OCCUPANCY IN ACCORDANCE WITH IBC §311.1.1.

BUILDING CONSTRUCTION TYPE

TYPE IIB - IBC §602.2
TYPE II (0,0,0) - NFPA 220 AND UFC 3-600-01 APPENDIX D

FIRE-RESISTANCE RATING REQUIREMENTS	REQUIREMENT	CODE REFERENCE
PRIMARY STRUCTURAL FRAME	0 HOUR	IBC TABLE 601
FLOOR CONSTRUCTION AND ASSOCIATED SECONDARY MEMBERS	0 HOUR	IBC TABLE 601
ROOF CONSTRUCTION AND ASSOCIATED SECONDARY MEMBERS	0 HOUR	IBC TABLE 601
WALLS		
EXTERIOR BEARING WALLS	0 HOUR	IBC TABLE 705.5
INTERIOR BEARING WALLS	0 HOUR	IBC TABLE 601
NONBEARING WALLS		
EXTERIOR NONBEARING WALLS (FIRE SEPARATION DISTANCE LESS THAN 3.048 M)	1 HOUR	IBC TABLE 705.5
INTERIOR NONBEARING WALLS	0 HOUR	IBC TABLE 601

BUILDING HEIGHT AND AREA	ALLOWABLE	ACTUAL
BUILDING HEIGHT (NO. OF STORIES):	4 STORIES	1 STORIES
BUILDING HEIGHT (M):	22.6 M	6.7 M
BUILDING AREA (M²)	BUILDING OCCUPANCY B: 8,546.8 SM (SPRINKLERED) BUILDING OCCUPANCY S: 6,503 SM (SPRINKLERED)	1,718.7 SM

BUILDING SEPARATION AND EXPOSURE PROTECTION

BUILDING SEPARATION IS REQUIRED TO BE PROVIDED IN ACCORDANCE WITH IBC AS REFERENCED IN UFC 3-600-01. IT APPEARS THAT THE NEAREST RADOME STRUCTURE TO THE SOUTH OF B100 IS LESS THAN 4.57 M AWAY WITH THE OVERHANG OF THE RADOME STRUCTURE. THIS WOULD REQUIRE 1 HOUR EXTERIOR WALLS BASED ON IBC TABLE 705.5. THIS REQUIREMENT DOES NOT APPEAR TO BE MET, AND THE EXISTING CONDITION WILL BE DOCUMENTED HERE AND DISCUSSED WITH THE DFPE. IT IS NOT EXPECTED THAT OUR PROJECT WOULD CORRECT THIS EXISTING CONDITION.

OCCUPANCY SEPARATION

FACILITY IS CONSIDERED A NON-SEPARATED MIXED USE FACILITY. OCCUPANCY SEPARATION IS NOT REQUIRED BECAUSE THE QUANTITIES OF ANY HAZARDOUS MATERIALS DO NOT EXCEED THE MAXIMUM ALLOWABLE QUANTITIES OF NFPA 400 ANYWHERE WITHIN THE FACILITY.

FIRE WATER SUPPLY

WATER FOR THE FIRE PROTECTION SYSTEMS IS PROVIDED BY AN 200 MM FIRE LINE FED BY AN EXISTING FIRE PUMP. A FIRE FLOW TEST HAS NOT BEEN CONDUCTED. A FUTURE FIRE HYDRANT FLOW MUST BE PERFORMED UNDER THE DIRECTION OF THE QFPE IAW NFPA 291 UNLESS OTHERWISE DIRECTED BY THE DFPE.

FIRE FLOWS

WATER FOR FIRE FLOWS WILL BE PROVIDED BY EXISTING FIRE PUMP. IN ACCORDANCE WITH UFC 3-600-01 §9-2.1; SINCE THE BUILDING IS FULLY PROTECTED BY AUTOMATIC SPRINKLER SYSTEMS THE FIRE FLOW MUST BE IN ACCORDANCE WITH NFPA 1 OR 3,785 LPM AT 138 KPA WHICHEVER IS GREATER. NFPA 1 §18.4.4.3.1 REQUIRES FIRE FLOWS TO BE IN ACCORDANCE WITH TABLE 18.4.4.2.1. THE FACILITY IS APPROXIMATELY 1,718.7 SM IN AREA AND TYPE II (0,0,0) CONSTRUCTION. THE REQUIRED FIRE FLOW IS 10,409 LPM FOR A DURATION OF 2 HOURS. NFPA 1 §18.4.4.3.2 PERMITS A 75% REDUCTION UP TO 3,785 LPM IN THE REQUIRED FIRE FLOW WHEN THE FACILITY IS PROTECTED BY AN AUTOMATIC SPRINKLER SYSTEM. THIS RESULTS IN A FIRE FLOW OF 3,785 LPM AT 138 KPA.

AUTOMATIC FIRE SUPPRESSION SYSTEMS

FACILITY IS CURRENTLY EQUIPPED WITH WET-PIPE AND DOUBLE INTERLOCK PRE-ACTION AUTOMATIC SPRINKLER PROTECTION . A STANDPIPE SYSTEM IS NOT REQUIRED SINCE THE FACILITY IS LESS THAN FOUR STORIES IN HEIGHT AND ALL PORTIONS OF THE FACILITY CAN BE REACHED FROM AN EXTERIOR DOOR IN LESS THAN 140 M.

PORTABLE FIRE EXTINGUISHERS

PORTABLE FIRE EXTINGUISHERS MUST BE PROVIDED WHERE REQUIRED BY NFPA 101 IN ACCORDANCE WITH UFC 3-600-01 §9-17.1. UNIFORM SIGNAGE MUST BE PROVIDED AT ALL EXTINGUISHERS.

FIRE ALARM AND MASS NOTIFICATION SYSTEMS

FACILITY WILL BE EQUIPPED WITH A COMBINATION FIRE ALARM/MASS NOTIFICATION SYSTEM SINCE THE FACILITY WILL BE REGULARLY OCCUPIED BY MORE THAN 11 DoD PERSONNEL. FIRE ALARM/MASS NOTIFICATION SYSTEM IS DESIGNED ACCORDANCE WITH UFC 4-021-01 AND UFC 3-600-01. FIRE ALARM AND MASS NOTIFICATION SYSTEMS USE EXISTING MONACO TO REPORT FIRE ALARM SIGNALS TO BASE RECEIVING STATION. HOWEVER THERE IS NO RECEIVING STATION FOR MASS NOTIFICATION SIGNALS AND THE SYSTEM WILL BE LOCAL TO THIS BUILDING ONLY.

HAZARDOUS MATERIALS

WITHIN THE UPS AND BATTERY ROOM 122 THERE IS A LARGE QUANTITY OF LEAD ACID BATTERIES (2-300KVA CABINETS) PROVIDED WITHIN THE CABINETS TO SUPPORT THE BACKUP POWER TO THE FACILITY. IT WAS MENTIONED THERE IS A PLANNED SCOPE OF WORK UPCOMING TO REPLACE THE UPS SYSTEM. AS PART OF THIS UPGRADE, A FULL HAZARD MITIGATION ANALYSIS (HM) SHOULD BE COMPLETED TO DOCUMENT EXISTING CONDITIONS AND COMPLIANCE WITH NFPA 855 AND APPLICABLE UL LISTING AND CERTIFICATIONS.

IT APPEARS AS IF DURING CONSTRUCTION AT SOME POINT A WALL WAS REMOVED IN THIS SPACE BETWEEN THE MAIN ELECTRICAL AND UPS EQUIPMENT. AN RFI WILL BE ASKED TO CONFIRM THE EXISTING EQUIPMENT AND ITS UL LISTING. IAW NFPA 855 TABLE 9.4.1 THE MAQ FOR LEAD ACID BATTERY IS UNLIMITED. THIS PROJECT CURRENTLY ASSUMES THE INSTALLATION WAS DONE AS PER ITS UL LISTING (UL 1778 OR UL9520). A 1 HOUR RATED SEPARATION SHOULD BE PROVIDED AT A MINIMUM BETWEEN THE UPS AND OTHER OCCUPANCIES FOLLOWING NFPA 855 SECTION 9.6.4 HOWEVER CURRENTLY THERE IS NO SEPARATION PROVIDED.

EXHAUST IS CURRENTLY PROVIDED IN THE UPS SPACE.

DRAFT

US Army Corps of Engineers
Japan District ®

FOR REVIEW ONLY
THESE DOCUMENTS ARE FOR CONCEPT DESIGN AND NOT INTENDED FOR CONSTRUCTION BIDDING OR PERMIT PURPOSES. THEY WERE PREPARED BY, OR UNDER SUPERVISION OF:
ALEX D SHEFFERMAN
NAME
147009 04/28/2025
REGISTRATION # DATE
TEXAS REGISTERED ENGINEERING FIRM F-2966

MARK	DESCRIPTION	DATE

DESIGNED BY: A.S.
DRAWN BY: E.H.
CHECKED BY: B.B.
SUBMITTED BY: A. GUERRA
SIZE: ISO A1
ISSUE DATE: 7/18/2025
SOLICITATION NO.:
CONTRACT NO.: W912HQ19D0007
DRAWING CODE:
FILE NAME: GI012

US ARMY CORPS OF ENGINEERS
JAPAN ENGINEER DISTRICT
OKINAWA, JAPAN
Jacobs
JACOBS GOVERNMENT SERVICES COMPANY
777 MAIN STREET, 2500 WORTH, TX 76102 USA

FY25 REPAIR HVAC WIDEBAND SATCOM OPS B100
CAMP BUCKNER COMMUNICATIONS ANNEX
OKINAWA, JAPAN
PROJECT NUMBER:D3449305
BUILDING CODE ANALYSIS

SHEET ID
GI012

GI012-

FILE PATH: C:_Revit_Local_Models\2022\D3449305-F-3D_Estefania.Hinojosa.rvt
PLOT DATE: 7/18/2025 10:23:22 AM PLOTTED BY: PLOT SCALE: 1 : 1

FINAL DESIGN

SATCOM - LSC SUMMARY

LSC OCCUPANCY CLASSIFICATION

MIXED OCCUPANCY IN ACCORDANCE WITH LSC §6.1.14.2.2

FIRST FLOOR
BUSINESS
STORAGE

RENOVATION CLASSIFICATION

THIS SPACE WILL BE RENOVATED AND MODIFIED IN ACCORDANCE WITH UFC 3-600-01 CHAPTER 34 FOR EXISTING FACILITIES AND NFPA 101 CHAPTER 43 SECTION 43.4 AND 43.5. THIS SCOPE OF WORK IS NOT EXPECTED TO TRIGGER ANY REQUIREMENTS FOR NEW CONSTRUCTION AND THE REQUIREMENTS FOR LIFE SAFEWAY WILL BE DOCUMENTED IN THE FOLLOWING SECTIONS AS WELL AS NOTING EXISTING CONDITIONS. NOTHING IN THIS SCOPE OF WORK WILL DO ANYTHING TO MODIFY THE OCCUPANCY OR USE OF THE BUILDING NOR WILL IT MODIFY THE EXISTING EGRESS CAPACITY.

CLASSIFICATION OF HAZARD OF CONTENTS	CODE REFERENCE
ORDINARY HAZARD CONTENTS	NFPA 101 §6.2.2.3

FIRE-RESISTANCE RATED CONSTRUCTION	REQUIREMENT	PROVIDED	CODE REFERENCE
IT EQUIPMENT ROOM	1 HOUR	0 HOUR	NFPA 855 §9.6.4
BATTERY ROOM	1 HOUR	0 HOUR	

THIS SCOPE OF WORK IS NOT EXPECTED TO TRIGGER THE REQUIREMENTS FOR NEW CONSTRUCTION. THE RENOVATIONS AND MODIFICATIONS ARE DONE IAW NFPA 101 SECTION 43.4 AND 43.5, RESPECTIVELY. BUILDING REHABILITATION REQUIREMENTS WILL NOT LOWER THE LEVEL OF PROTECTION WITH THE EXISTING CONDITIONS PRESENT. DISCUSSION WITH THE DFPE IS TO BE DISCUSSED AROUND THE LACK OF HAZARD SEPARATION AND IF THIS PROJECT SHOULD ADDRESS THIS IN ANY WAY BUT IT IS NOT CURRENTLY EXPECTED THAT THIS PROJECT WOULD CORRECT THESE EXISTING CONDITIONS.

OPENING PROTECTION FOR FIRE-RESISTANCE RATED CONSTRUCTION	REQUIREMENT	CODE REFERENCE
ONE HOUR FIRE BARRIERS	45 MINUTE	NFPA 101 §8.3.3.2.2
TWO HOUR FIRE BARRIERS	1-1/2 HOUR	NFPA 101 §8.3.3.2.2

OCCUPANT LOAD FACTORS	OCCUPANT LOAD FACTOR (M^2/PERSON)	CODE REFERENCE
USE OF ROOM OR SPACE		
BUSINESS	14 SM GROSS	NFPA 101 TABLE 7.3.1.2
STORAGE	27.9 SM GROSS	NFPA 101 TABLE 7.3.1.2
MECHANICAL/ELECTRICAL EQUIPMENT	46.5 SM GROSS	UFC 3-600-01 TABLE 10-1
TELECOM ROOMS	27.9 SM GROSS	UFC 3-600-01 TABLE 10-1
ASSEMBLY	1.4 SM GROSS	NFPA 101 TABLE 7.3.1.2

MEANS OF EGRESS CAPACITY	CAPACITY FACTOR (MM/PERSON)	CODE REFERENCE
LEVEL COMPONENTS AND RAMPS	5	NFPA 101 §7.3.3.1
STAIRS	7.6	NFPA 101 §7.3.3.1

NOTE: DOOR OPENINGS WITHIN THE MEANS OF EGRESS WILL BE NOT LESS THAN 810 MM CLEAR IN ACCORDANCE WITH NFPA 101 §7.2.1.2.3.2. CORRIDORS SERVING AN OCCUPANT LOAD OF 50 OR MORE PERSONS WILL BE NOT LESS THAN 1,120 MM.

MINIMUM NUMBER OF REQUIRED EXITS/SEPARATION	CODE REFERENCE
IN ACCORDANCE WITH NFPA 101 THE MINIMUM NUMBER OF EXITS PROVIDED AS SHOWN IN SECTION 7.4.	NFPA 101 §7.4.1.1 NFPA 101 §7.5.1.3.3

THIS FACILITY INCLUDES AN AREA (THE ADMIN AREA IN THE BUILDING ADDITION) THAT IS PROVIDED WITH ONLY A SINGLE EXIT DUE TO THE SECURE NATURE OF THE DOOR GOING INTO THE SECURE AREA. THIS ARRANGEMENT IS PERMITTED IS SHOWN IN NFPA 101 SECTION 38.2.4.3 WHERE THE TRAVEL DISTANCE IS LESS THAN 30 M AND THE EXIT DISCHARGES DIRECTLY TO THE EXTERIOR.

THROUGH THE SECURE SIDE OF THE FACILITY THE MINIMUM 2 EXITS ARE PROVIDED AS REQUIRED IN SECTION 6.4 AND CHAPTER 38 AND 42 OF NFPA 101.

EXIT ACCESS AND ARRANGEMENT OF MEANS OF EGRESS	COMMON PATH LIMIT	DEAD-END LIMIT	TRAVEL DISTANCE LIMIT	CODE REFERENCE
BUSINESS	30 M	15 M	91 M	NFPA 101 TABLE A.7.6
STORAGE	30 M	30 M	122 M	NFPA 101 TABLE A.7.6

THE MOST RESTRICTIVE REQUIREMENTS FOR THE OCCUPANCY GROUPS UNDER CONSIDERATION WILL BE UTILIZED THROUGHOUT THE FACILITY UNLESS SEPARATE SAFEGUARDS ARE APPROVED. EXIT ACCESS PERMITTED TO INCLUDE A SINGLE EXIT ACCESS PATH FOR DISTANCES PERMITTED AS COMMON PATHS OF TRAVEL. A DESIGNATED MEANS OF EGRESS PATH WILL NOT BE PROVIDED WITHIN THE NORMALLY UNOCCUPIED BASEMENT IN ACCORDANCE WITH NFPA 101 SECTION 7.14.3.1.

ILLUMINATION OF MEANS OF EGRESS	CODE REFERENCE
ILLUMINATION OF THE MEANS OF EGRESS WILL BE PROVIDED WITHIN THE EXIT ACCESS AND EXIT DISCHARGE. THE EXIT ACCESS WILL INCLUDE ONLY STAIRS, CORRIDORS, AND AISLES LEADING TO AN EXIT. THE EXIT DISCHARGE WILL INCLUDE STAIRS, AISLES, CORRIDORS, AND WALKWAYS LEADING TO A PUBLIC WAY.	NFPA 101 §7.8.1.1
FLOORS AND WALKING SURFACES WITHIN AN EXIT AND WITHIN PORTIONS OF THE EXIT ACCESS AND EXIT DISCHARGE WILL BE ILLUMINATED WITH A LIGHT NO LESS THAN 10.8 LUX, MEASURED AT THE FLOOR LEVEL.	NFPA 101 §7.8.1.3
	NFPA 101 §7.8.1.4

EMERGENCY LIGHTING WITHIN THE MEANS OF EGRESS	CODE REFERENCE
EMERGENCY LIGHTING WITHIN THE MEANS OF EGRESS WILL BE PROVIDED WITHIN THE EXIT ACCESS AND EXIT DISCHARGE. THE EXIT ACCESS WILL INCLUDE ONLY STAIRS, CORRIDORS, AND AISLES LEADING TO AN EXIT. THE EXIT DISCHARGE WILL INCLUDE STAIRS, AISLES, CORRIDORS, AND WALKWAYS LEADING TO A PUBLIC WAY.	NFPA 101 §7.9.1.2
EMERGENCY LIGHTING WILL BE PROVIDED FOR A MINIMUM OF 1-1/2 HOURS IN THE EVENT OF FAILURE OF NORMAL LIGHTING	NFPA 101 §7.9.2.1
EMERGENCY LIGHTING WILL PROVIDE AN INITIAL ILLUMINATION THAT IS NOT LESS THAN AN AVERAGE OF 10.8 LUX AND, AT ANY POINT, NOT LESS THAN 2.2 LUX IN ACCORDANCE WITH NFPA 101 SECTION 7.9.2.1.1, MEASURED ALONG THE MEANS OF EGRESS AT FLOOR LEVEL.	NFPA 101 §7.9.2.1.1

MINIMUM REQUIRED INTERIOR FINISH OCCUPANCY	EXITS	EXIT ACCESS CORRIDORS	OTHER SPACES	CODE REFERENCE
BUSINESS	CLASS A OR B	CLASS A, B, OR C	CLASS A, B, OR C	NFPA 101 TABLE A.10.2.2
STORAGE	CLASS A OR B	CLASS A, B, OR C	CLASS A, B, OR C	NFPA 101 TABLE A.10.2.2

INTERIOR FINISHES WILL MEET THE MOST RESTRICTIVE OCCUPANCY REQUIREMENTS. FACILITY WILL BE EQUIPPED WITH AUTOMATIC SPRINKLER SYSTEM IN ACCORDANCE WITH NFPA 13.

MEANS OF EGRESS COMPONENTS — **CODE REFERENCE**

DOORS

THE MINIMUM DOOR LEAF WIDTH REQUIRED IS 810 MM CLEAR	NFPA 101 §7.2.1.2.3.2
DOORS OPENING INTO A PATH OF EGRESS WILL NOT REDUCE THE REQUIRED WIDTH TO LESS THAN 1/2 THE REQUIRED MINIMUM WIDTH OF AN AISLE, CORRIDOR, PASSAGEWAY, OR LANDING DURING THE COURSE OF TRAVEL. WHEN FULLY OPENED THE DOOR WILL HAVE NO MORE THAN 180 MM OF PROJECTION INTO THE REQUIRED WIDTH.	NFPA 101 §7.2.1.4.3
DOORS WILL BE READILY OPENED FROM THE EGRESS SIDE WITHOUT THE USE OF A KEY, TOOL, OR SPECIAL KNOWLEDGE OR EFFORT TO OPERATE.	NFPA 101 §7.2.1.5
SIDE HINGED AND SWING IN THE DIRECTION OF EXIT TRAVEL WHEN SERVING AN OCCUPANT LOAD GREATER THAN 50 PERSONS.	NFPA 101 §7.2.1.5.6

LOCKS, LATCHES, AND ALARM DEVICES

THE HARDWARE FOR EGRESS-SIDE OCCUPANT RELEASE WILL HAVE AN ELECTRIC LOCK AFFIXED TO THE DOOR LEAF.	NFPA 101 §7.2.1.6
THE HARDWARE WILL HAVE AN OBVIOUS METHOD OF OPERATION THAT IS READILY OPERATED UNDER ALL LIGHTING CONDITIONS.	NFPA 101 §7.2.1.6
THE HARDWARE SHALL BE CAPABLE OF BEING OPERATED WITH ONE HAND IN THE DIRECTION OF EGRESS.	NFPA 101 §7.2.1.6
OPERATION OF THE HARDWARE WILL DIRECTLY INTERRUPT THE POWER SUPPLY TO THE ELECTRIC LOCK AND UNLOCK THE DOOR ASSEMBLY IN THE DIRECTION OF EGRESS.	NFPA 101 §7.2.1.6
LOSS OF POWER TO THE LISTED RELEASING HARDWARE WILL AUTOMATICALLY, ELECTRICALLY UNLOCK THE DOOR ASSEMBLY IN THE DIRECTION OF EGRESS.	NFPA 101 §7.2.1.6

DRAFT

US Army Corps of Engineers
Japan District ®

FOR REVIEW ONLY
THESE DOCUMENTS ARE FOR CONCEPT DESIGN AND NOT INTENDED FOR CONSTRUCTION BIDDING OR PERMIT PURPOSES. THEY WERE PREPARED BY, OR UNDER SUPERVISION OF:
ALEX D SHEFFERMAN
NAME
147009 — REGISTRATION #
04/28/2025 — DATE
TEXAS REGISTERED ENGINEERING FIRM F-2966

MARK	DESCRIPTION	DATE

ISSUE DATE: 7/18/2025
SOLICITATION NO.:
CONTRACT NO.: W912HV19D0007
DRAWING CODE:
DESIGNED BY: A.S.
DRAWN BY: R.H.
CHECKED BY: B.B.
SUBMITTED BY: A. GUERRA
SIZE: ISO A1
FILE NAME: GI013

US ARMY CORPS OF ENGINEERS
JAPAN ENGINEER DISTRICT
OKINAWA, JAPAN

Jacobs
JACOBS GOVERNMENT SERVICES COMPANY
777 MAIN STREET, FT. WORTH, TX 76102
USA

FY25 REPAIR HVAC WIDEBAND SATCOM OPS B100
CAMP BUCKNER COMMUNICATIONS ANNEX
OKINAWA, JAPAN
PROJECT NUMBER:D3449305

LIFE SAFETY CODE ANALYSIS

SHEET ID
GI013

FILE PATH: C:_Revit_Local_Models\2022\D3449305-F-3D_Estefania.Hinojosa.rvt
PLOT DATE: 7/18/2025 10:23:22 AM PLOTTED BY: PLOT SCALE: 1 : 1

FINAL DESIGN

ROOM NO.	ROOM NAME	IBC OCCUPANCY TYPE	LSC OCCUPANCY TYPE	OCCUPANT LOAD FACTOR	AREA	OCCUPANT...
101	ENTRY	B	BUSINESS	14	20.8	2
102	GENERAL ADMIN AREA	B	BUSINESS	14	49.1	4
103	CORRIDOR	B	BUSINESS	14	8.45	1
104	CONFERENCE ROOM	A-3	ASSEMBLY	1.4	28.7	21
105	SUPPLY ROOM	S-1	STORAGE	46.5	31.59	1
106	TRAINING OFFICE	B	BUSINESS	14	20.25	2
106	OFFICE	B	BUSINESS	14	18.12	2
107	COMMANDER OFFICE	B	BUSINESS	14	21.37	2
107	VESTIBULE	B	BUSINESS	14	4.37	1
108	XO OFFICE	B	BUSINESS	14	13.01	1
108	TECHNICAL EQUIPMENT...	S-1	STORAGE (MECH/ELEC)	46.5	508.18	11
109	1ST SGT OFFICE	B	BUSINESS	14	13.01	1
109	OPERATIONS ROOM	B	BUSINESS	14	194.82	14
109A	OFFICE	B	BUSINESS	14	18.12	2
109B	CLASSROOM/LAB/BRIEFING...	B	BUSINESS	14	38.28	3
109C	OFFICE	B	BUSINESS	14	22.11	2
110	FITNESS EQUIPMENT ROOM	S-1	STORAGE	46.5	21.37	1
110	OPERATIONS OFFICE	B	BUSINESS	14	34.65	3
111	WOMEN'S TOILET/SHOWER	B	BUSINESS	14	22.27	2
111	ISSO OFFICE	B	BUSINESS	14	20.16	2
112	MEN'S TOILET/SHOWER	B	BUSINESS	14	27.41	2
112	CLASSROOM	B	BUSINESS	14	55.18	4
113	JAN	S-1	STORAGE	46.5	22.04	1
113	PLL ROOM	S-1	STORAGE	46.5	62.99	2
114	CORRIDOR	B	BUSINESS	14	10.5	1
114	VAULT	S-1	STORAGE	46.5	19.7	1
115	MAINTENANCE OFFICE	B	BUSINESS	14	23.69	2
115	STAIR	NOT REGULARLY...				
116	STORAGE/WORK ROOM	S-1	STORAGE	46.5	5.3	1
117	COMM ROOM	S-1	STORAGE (TELECOM)	27.9	7.34	1
118	MECHANICAL ROOM	S-1	STORAGE (MECH/ELEC)	46.5	18.86	1
119	ELEC ROOM	S-1	STORAGE (MECH/ELEC)	46.5	3.25	1
120	A/C ROOM	S-1	STORAGE (MECH/ELEC)	46.5	63.73	2
121	MECH YARD	NOT REGULARLY...				
122	UPS & BATTERY ROOM	S-1	STORAGE (TELECOM)	27.9	106.93	4
	CORRIDOR	B	BUSINESS	14	70.33	6
	HALLWAY	B	BUSINESS	14	9.1	1
	BREAK ROOM	B	BUSINESS	14	7.06	1
	KITCHEN	B	BUSINESS	14	12.54	1
	KITCHEN	B	BUSINESS	14	1.58	1
	TOILET	B	BUSINESS	14	5.95	1
					TOTAL	**112**

OCCUPANCY LEGEND

PATTERN	OCCUPANCY TYPE	OCCUPANT LOAD FACTOR (SM /OCC)
(NONE)	BUSINESS	14
	ASSEMBLY	1.4
	STORAGE (TELECOM)	27.9
	STORAGE	46.5
	STORAGE (MECH/ELEC)	46.5

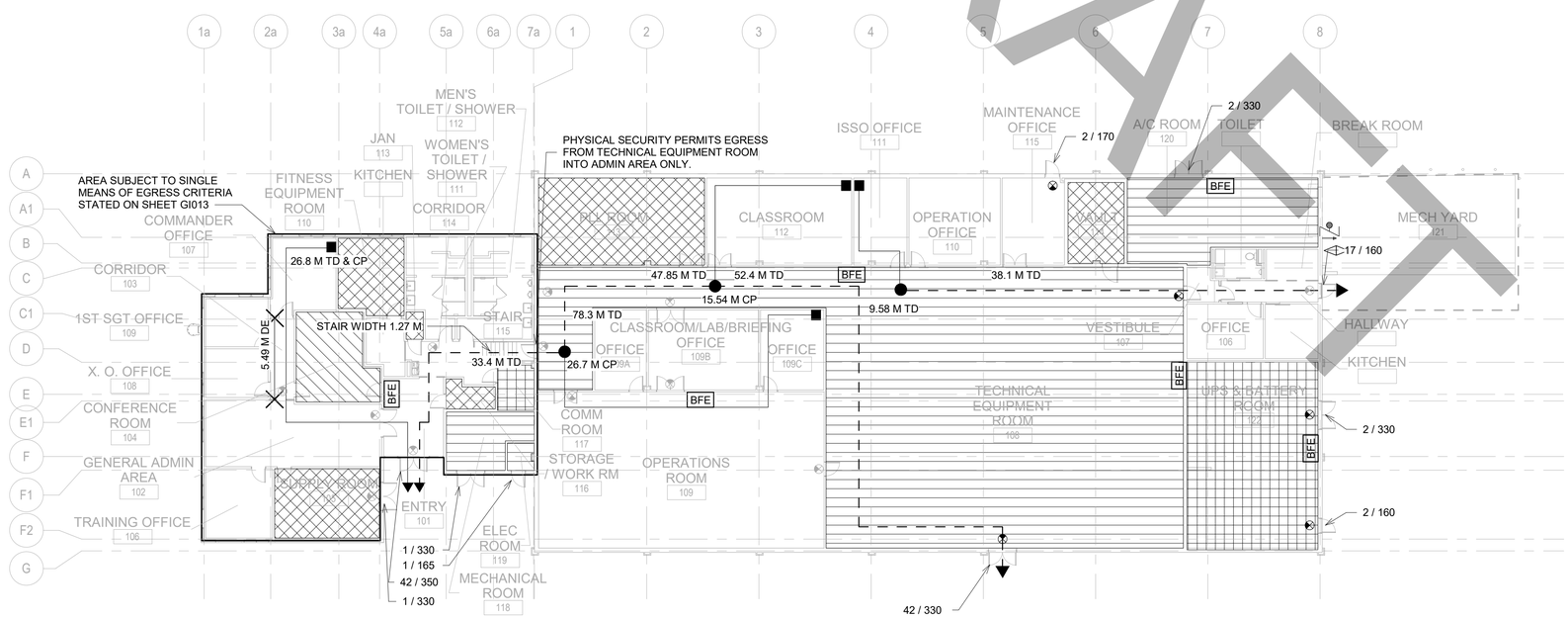

A1 / GI014 LIFE SAFETY OVERALL FLOOR PLAN

1 : 200

GENERAL SHEET NOTES

A. 2024 NFPA 101 LIFE SAFETY CODE; EGRESS REQUIREMENTS.
B. INTERNATIONAL BUILDING CODE 2024; OCCUPANCY CLASSIFICATION, CONSTRUCTION TYPE AND CONSTRUCTION REQUIREMENTS; AS PRESCRIBED BY UFC 1-200-01 AND UFC 3-600-01.

LEGEND

PATH OF EXIT TRAVEL WITH DISTANCES FROM SELECTED REMOTE LOCATIONS TO NEAREST EXIT. INCLUDES: TOTAL TRAVEL DISTANCE (TD) AND COMMON PATH OF TRAVEL (CP).

44.5 M TD 22.9 M CP

- INDICATES START OF CP & TD
- INDICATES END OF CP
- INDICATES POINT OF EXIT
- INDICATES DEAD END
- Room name — ROOM NAME
- 101 — ROOM NUMBER
- 10 / 180 — TOTAL OCCUPANT CAPACITY OF OPENING
- TOTAL OCCUPANT CAPACITY OF OPENING
- EXIT LIGHT FIXTURE, REFER TO ELECTRICAL DRAWINGS
- BFE — BRACKET MOUNTED FIRE EXTINGUISHER; 5 LB ABC FIRE EXTINGUISHER (GFCI)

KEY PLAN

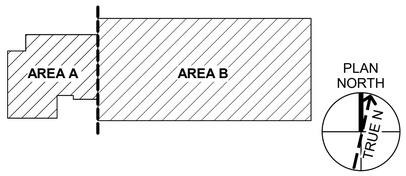

GRAPHIC SCALE(S)

0 4000 8000

SCALE: 1:200

US Army Corps of Engineers
Japan District ®

FOR REVIEW ONLY

THESE DOCUMENTS ARE FOR CONCEPT DESIGN AND NOT INTENDED FOR CONSTRUCTION, BIDDING OR PERMIT PURPOSES. THEY WERE PREPARED BY, OR UNDER SUPERVISION OF:

ALEX D SHEFFERMAN
NAME

147009 04/28/2025
REGISTRATION # DATE

TEXAS REGISTERED ENGINEERING FIRM F-2966

MARK	DESCRIPTION	DATE

DESIGNED BY: A.S.
DRAWN BY: A.M.
CHECKED BY: B.B.
SUBMITTED BY: A. GUERRA
SIZE: ISO A1
FILE NAME: GI014
ISSUE DATE: 7/18/2025
SOLICITATION NO.:
CONTRACT NO.: W912HQ19D0007
DRAWING CODE:

US ARMY CORPS OF ENGINEERS
JAPAN ENGINEER DISTRICT
OKINAWA, JAPAN

Jacobs
JACOBS GOVERNMENT SERVICES COMPANY
777 MAIN STREET, FORT WORTH, TX 76102 USA

FY25 REPAIR HVAC WIDEBAND SATCOM OPS B100
CAMP BUCKNER COMMUNICATIONS ANNEX
OKINAWA, JAPAN
PROJECT NUMBER:D3449305

LIFE SAFETY OVERALL FLOOR PLAN

SHEET ID

GI014

DRAFT

FILE PATH: C:_Revit_Local_Models\2022\D3449305-F-3D_Estefania.Hinojosa.rvt
PLOT DATE: 7/18/2025 10:23:22 AM PLOTTED BY: PLOT SCALE: As indicated

FINAL DESIGN

GI014-

HAZARDOUS MATERIALS REMOVAL NOTES

1. THE IDENTITIES, AND LOCATIONS, OF HAZARDOUS MATERIALS SHOWN ARE AS DESCRIBED IN THE HAZARDOUS MATERIALS REPORT ENTITLED “HAZARDOUS MATERIALS INSPECTION REPORT" BY ENVIRONMENTAL SCIENCE CORPORATION, 2025. FIELD-VERIFY THE PRESENCE AND QUANTITY OF HAZARDOUS MATERIALS IDENTIFIED IN THE HAZMAT REPORT AND IMMEDIATELY REPORT ANY DISCREPANCIES TO THE CONTRACTING OFFICER.
2. GYPSUM BOARD WALLS AND CEILINGS MAY CONTAIN ELEVATED LEVELS OF ARSENIC/CADMIUM. CONTRACTOR TO CONFIRM MANUFACTURER SERIAL NUMBERS ON REVERSE OF BOARDS. HANDLE AND DISPOSE OF ARSENIC CONTAINING BOARDS IN ACCORDANCE WITH JEGS, AND APPLICABLE GOVERNMENT OF JAPAN (GOJ) AND/OR LOCAL PREFECTURE REGULATIONS.
3. PRIOR TO DEMOLITION CONDUCT DESTRUCTIVE/INVASIVE SURVEY AND INSPECTION IN EACH FACILITY TO IDENTIFY HIDDEN OR OTHER SUSPECT POTENTIALLY HAZARDOUS MATERIAL, WHICH HAS NOT BEEN PREVIOUSLY CHARACTERIZED. CONDUCT SAMPLING LAB ANALYSIS IN ACCORDANCE WITH THE JEGS TO DETERMINE ASBESTOS CONTENT. REPORT ALL RESULTS IN AN INSPECTION REPORT TO BE SUBMITTED TO THE CONTRACTING OFFICER..
4. IF HIDDEN OR OTHER SUSPECT POTENTIALLY HAZARDOUS MATERIAL, WHICH HAS NOT BEEN PREVIOUSLY CHARACTERIZED, IS ENCOUNTERED DURING DEMOLITION OR RENOVATIONS, THE SUSPECT MATERIAL MUST BE ASSUMED HAZARDOUS UNTIL PROVEN OTHERWISE BY A QUALIFIED INSPECTOR. DO NOT DISTURB THE MATERIAL AND IMMEDIATELY REPORT TO THE CONTRACTING OFFICER AND OBTAIN CONCURRENCE TO IDENTIFY, SAMPLE, ANALYZE, AND EVALUATE SUCH MATERIAL IN ACCORDANCE WITH PROJECT SPECIFICATIONS.
5. DEMOLITION MUST INCLUDE ENVIRONMENTAL ABATEMENT OF HAZARDOUS MATERIALS INCLUDING, BUT NOT LIMITED TO, PCBS, MERCURY CONTAINING LAMPS AND SWITCHES, ETC. INSPECT, IDENTIFY, REMOVE AND DISPOSE OF ALL HAZARDOUS MATERIALS IN ACCORDANCE WITH PROJECT SPECIFICATIONS, OSHA, JEGS, AND PERTINENT GOJ REGULATIONS. WHERE SUCH PROVISIONS DIFFER, THE MORE STRINGENT MUST APPLY.
6. VERIFY TEMPORARY STORAGE AREA FOR ALL HAZARDOUS MATERIALS FOR DISPOSAL WITH THE CONTRACTING OFFICER.

HAZARDOUS MATERIALS REMOVAL NOTES (CONTINUED)

7. SECURE THE WORK AREA, PROTECT ADJOINING AREAS PRIOR TO DISTURBING ANY MATERIAL FOR THE ABATEMENT ACTIVITY. MAINTAIN CRITICAL BARRIERS, ISOLATION, AND WARNING SIGNS AS NECESSARY DURING ALL ABATEMENT OPERATIONS, UNTIL FINAL CLEARANCE HAS BEEN APPROVED FOR EACH WORK AREA. PROTECT ALL SURROUNDING AREAS, INCLUDING SOIL, FROM HAZARDOUS MATERIALS THROUGHOUT ABATEMENT AND DEMOLITION ACTIVITIES.
8. AS INDICATED IN THE HAZARDOUS MATERIALS INSPECTION REPORT (ESC, 2025) LEAD BASED PAINT HAS BEEN IDENTIFIED. CONTRACTOR SHOULD ASSUME ALL PAINTS AND COATINGS CONTAIN LEAD AT DETECTABLE LEVELS. OSHA EXPOSURE CONTROLS/LIMITS APPLY WHEN HANDLING PAINT WITH ANY DETECTABLE LEVELS OF LEAD. HANDLE IN ACCORDANCE WITH CONTRACT SPECIFICATION SECTION 02 83 00.
9. PAINTS, COATINGS, AND OTHER LEAD ITEMS CONTAINING LEAD CONCENTRATIONS EXCEEDING JEGS AND/OR GOJ WASTE MANAGEMENT AND PUBLIC CLEANSING LAW HAZARDOUS WASTE REGULATORY LIMITS AS DETERMINED BY TCLP ANALYSIS, ARE TO BE HANDLED AND DISPOSED OF AS SPECIALLY CONTROLLED INDUSTRIAL WASTE IN ACCORDANCE WITH GOJ AND LOCAL PREFECTURE REGULATIONS.
10. VERIFY LIGHTING BALLASTS FOR PRESENCE OF PCBS. AS REQUIRED, REMOVE AND SEGREGATE PCB-CONTAINING AND NON-PCB CONTAINING BALLASTS FOR LIGHTING FIXTURES. SEGREGATE BALLASTS BY US-MADE AND FOREIGN-MADE BALLASTS, STORE IN ACCORDANCE WITH JEGS. COORDINATE WITH THE CONTRACTING OFFICER FOR STORAGE AND TURN-IN REQUIREMENTS.
11. INSPECT, IDENTIFY, REMOVE INTACT, AND DISPOSE OF FLUORESCENT AND HIGH INTENSITY DISCHARGE (HID) LIGHT BULBS SUSPECT FOR CONTAINING MERCURY IN ACCORDANCE WITH THE PCB AND LAMP REMOVAL WORK PLAN.
12. INSPECT, IDENTIFY, REMOVE AND DISPOSE OF SMOKE DETECTORS AND/OR EXIT SIGNS WITH POSSIBLE RADIOACTIVE MATERIALS IN ACCORDANCE WITH OSHA, JEGS, AND PERTINENT GOJ REGULATIONS.
13. IF REQUIRED REMOVE AND RECYCLE OR DISPOSE OF MOUNTED EQUIPMENT BATTERIES (NI-CAD, LITHIUM-ION, MAGNESIUM-ION, ETC) IN ACCORDANCE WITH JEGS AND PERTINENT GOJ REGULATIONS.

HAZARDOUS MATERIALS REMOVAL NOTES (CONTINUED)

14. COORDINATE ALL HAZMAT REMOVAL WORK WITH ARCHITECTURAL DEMOLITION DRAWINGS. MATERIALS NOT DISTURBED BY DEMOLITION MUST BE PROTECTED IN PLACE.

ABBREVIATIONS

ACM	ASBESTOS CONTAINING MATERIALS
LBP	LEAD BASED PAINT
PCB	POLYCHLORINATED BIPHYNLS
PWL	PAINT WITH LEAD

HAZARDOUS MATERIALS LEGEND

- ⬡ ASBESTOS CONTAINING MATERIAL (ACM)
- △ LEAD BASED PAINT (LBP)

HAZARDOUS MATERIALS KEY NOTES

1. VINYL COVE BASE w/ MASTIC
2. INTERIOR CONCRETE WALL (ELEC.ROOM)
3. INTERIOR CONCRETE WALL (MECH.ROOM)
4. FLOOR SLAB (MECH. ROOM)
5. FLOOR MORTAR REPAIR SEAL (MECH.ROOM)
6. CONCRETE WALL (EXTERIOR)
7. CEILING SLAB (SERV.ROOM)
8. WALLBOARD (SERV.ROOM)
9. FLOOR SLAB (SERV.ROOM)

1. RED PAINT ON METAL PIPE - EXTERIOR
2. RED PAINT ON METAL PIPE - INTERIOR
3. GRAY PAINT ON METAL CONDUIT PIPE - EXTERIOR
4. GRAY PAINT ON METAL CONDUIT PIPE - INTERIOR
5. GRAY PAINT ON METAL STRUCTURE - INTERIOR
6. GRAY PAINT ON ELECTRIC BOX - INTERIOR
7. GRAY PAINT ON STEEL DOOR FRAME - INTERIOR
8. IVORY PAINT ON STEEL DOOR FRAME - INTERIOR
9. TAN PAINT ON STEEL DOOR FRAME - INTERIOR
10. WHITE PAINT ON METAL CONDUIT PIPE - INTERIOR

DRAFT

US Army Corps of Engineers
Japan District ®

FOR REVIEW ONLY

THESE DOCUMENTS ARE FOR CONCEPT DESIGN AND NOT INTENDED FOR CONSTRUCTION BIDDING OR PERMIT PURPOSES. THEY WERE PREPARED BY, OR UNDER SUPERVISION OF:

NAME 09/04/2025
REGISTRATION # DATE
TEXAS REGISTERED ENGINEERING FIRM F-2966

MARK	DESCRIPTION	DATE

ISSUE DATE: 09/04/2025
SOLICITATION NO.:
CONTRACT NO.:
DRAWING CODE:
FILE NAME: G-1004-H-001

DESIGNED BY: J. NAKAO
DRAWN BY: S. KAZUYOSHI
CHECKED BY: G. COKINOS
SUBMITTED BY: A. GUERRA
SIZE: ISO A1

US ARMY CORPS OF ENGINEERS
JAPAN ENGINEER DISTRICT
OKINAWA, JAPAN

Jacobs
JACOBS GOVERNMENT SERVICES COMPANY
777 MAIN STREET, FORT WORTH, TX 76102
USA

FY25 REPAIR HVAC WIDEBAND SATCOM OPS B100
CAMP BUCKNER COMMUNICATIONS ANNEX
OKINAWA, JAPAN
PROJECT NUMBER:D349305

BUILDING 100 HAZARDOUS MATERIALS REMOVAL PLAN

SHEET ID
H-001

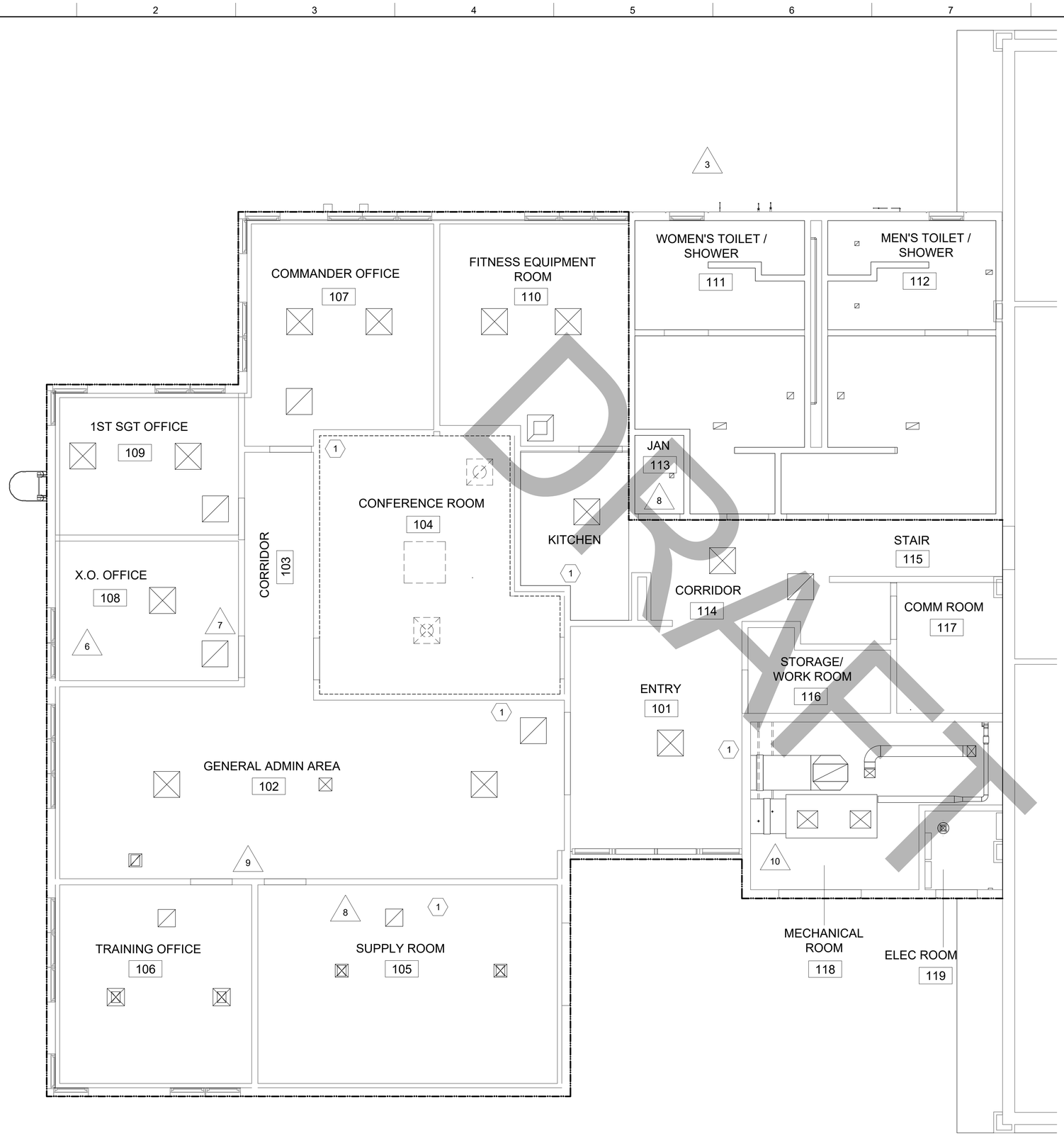

A1 BUILDING 100 HAZARDOUS MATERIALS REMOVAL PLAN - EXTENSION 1

1 : 50

GENERAL NOTES:

1. REFER TO H-001 FOR HAZARDOUS MATERIAL REMOVAL NOTES. HAZARDOUS MATERIAL REMOVAL NOTES APPLY TO ALL DRAWINGS.
2. SHOWN FLOOR PLAN IS REPRESENTATIVE OF ALL UNITS.
3. LOCATIONS SHOWN ON THESE DRAWINGS ARE AN ESTIMATE ONLY. CONTRACTOR IS RESPONSIBLE FOR DETERMINING FINAL ABATEMENT QUANTITIES BASED ON COORDINATION WITH ALL OTHER TRADES AND DETERMINATION OF FINAL LOCATIONS WHERE ACM OR LBP WILL BE DISTURBED.

SHEET KEYNOTES

1 VINYL COVE BASE w/ MASTIC

3 GRAY PAINT ON METAL CONDUIT PIPE - EXTERIOR

6 GRAY PAINT ON ELECTRIC BOX - INTERIOR

7 GRAY PAINT ON STEEL DOOR FRAME - INTERIOR

8 IVORY PAINT ON STEEL DOOR FRAME - INTERIOR

9 TAN PAINT ON STEEL DOOR FRAME - INTERIOR

10 WHITE PAINT ON METAL CONDUIT PIPE - INTERIOR

SHEET LEGEND

ASBESTOS CONTAINING MATERIAL (ACM)

LEAD BASED PAINT (LBP)

KEY PLAN

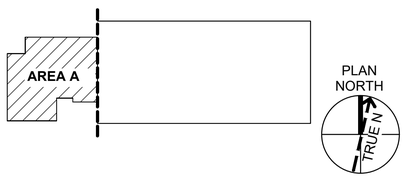

GRAPHIC SCALE(S)

0 500 1000 2000

SCALE: 1:50

US Army Corps of Engineers
Japan District ®

FOR REVIEW ONLY

THESE DOCUMENTS ARE FOR CONCEPT DESIGN AND NOT INTENDED FOR CONSTRUCTION BIDDING OR PERMIT PURPOSES. THEY WERE PREPARED BY, OR UNDER SUPERVISION OF:

NAME 09/04/2025
REGISTRATION # DATE
TEXAS REGISTERED ENGINEERING FIRM F-2966

MARK	DESCRIPTION	DATE

DESIGNED BY: C.SURLES
DRAWN BY: S. YASUTOMI
CHECKED BY: G. COKINOS
SUBMITTED BY: A. GUERRA
SIZE: ISO A1
ISSUE DATE: 09/04/2025
SOLICITATION NO.:
CONTRACT NO.:
DRAWING CODE:
FILE NAME: G-1004-HD-101

US ARMY CORPS OF ENGINEERS
JAPAN ENGINEER DISTRICT
OKINAWA, JAPAN

Jacobs
JACOBS GOVERNMENT SERVICES COMPANY
777 MAIN STREET, FT. WORTH, TX 76102
USA

FY25 REPAIR HVAC WIDEBAND SATCOM OPS B100
CAMP BUCKNER COMMUNICATIONS ANNEX
OKINAWA, JAPAN
PROJECT NUMBER:D3449305

BUILDING 100 HAZARDOUS MATERIALS REMOVAL PLAN

SHEET ID

HD-101

BACKCHECK SUBMITTAL DESIGN

GENERAL NOTES:

1. REFER TO H-001 FOR HAZARDOUS MATERIAL REMOVAL NOTES. HAZARDOUS MATERIAL REMOVAL NOTES APPLY TO ALL DRAWINGS.
2. SHOWN FLOOR PLAN IS REPRESENTATIVE OF ALL UNITS.
3. LOCATIONS SHOWN ON THESE DRAWINGS ARE AN ESTIMATE ONLY. CONTRACTOR IS RESPONSIBLE FOR DETERMINING FINAL ABATEMENT QUANTITIES BASED ON COORDINATION WITH ALL OTHER TRADES AND DETERMINATION OF FINAL LOCATIONS WHERE ACM OR LBP WILL BE DISTURBED.

SHEET KEYNOTES

- 2 INTERIOR CONCRETE WALL (ELEC.ROOM)
- 3 INTERIOR CONCRETE WALL (MECH.ROOM)
- 4 FLOOR SLAB (MECH. ROOM)
- 5 FLOOR MORTAR REPAIR SEAL (MECH.ROOM)
- 6 CONCRETE WALL (EXTERIOR)
- 7 CEILING SLAB (SERV.ROOM)
- 8 WALLBOARD (SERV.ROOM)
- 9 FLOOR SLAB (SERV.ROOM)
- 2 RED PAINT ON METAL PIPE - INTERIOR
- 4 GRAY PAINT ON METAL CONDUIT PIPE - INTERIOR
- 5 GRAY PAINT ON METAL STRUCTURE - INTERIOR

SHEET LEGEND

- ASBESTOS CONTAINING MATERIAL (ACM)
- LEAD BASED PAINT (LBP)

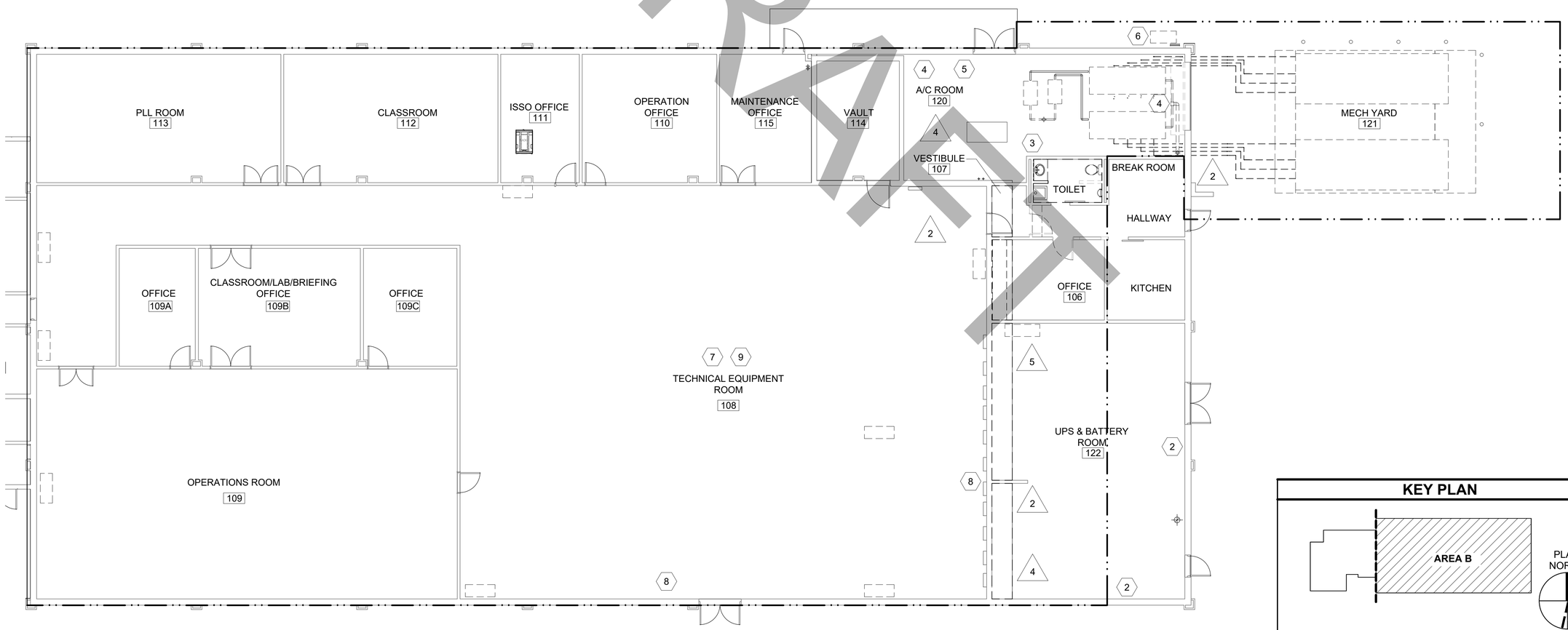

DRAFT

A1 BUILDING 100 HAZARDOUS MATERIALS REMOVAL PLAN - MAIN STRUCTURE
1 : 100

KEY PLAN

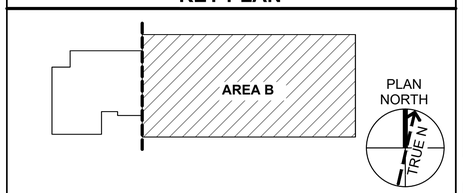

GRAPHIC SCALE(S)

0 2000 4000
SCALE: 1:100

US Army Corps of Engineers
Japan District ®

FOR REVIEW ONLY
THESE DOCUMENTS ARE FOR CONCEPT DESIGN AND NOT INTENDED FOR CONSTRUCTION BIDDING OR PERMIT PURPOSES. THEY WERE PREPARED BY, OR UNDER SUPERVISION OF:
NAME 09/04/2025
REGISTRATION # DATE
TEXAS REGISTERED ENGINEERING FIRM F-2966

MARK	DESCRIPTION	DATE

ISSUE DATE: 09/04/2025
SOLICITATION NO.:
CONTRACT NO.:
DRAWING CODE:
DESIGNED BY: J. NAKAO
DRAWN BY: S. WATTOWICH
CHECKED BY: G. COKINOS
SUBMITTED BY: A. GUERRA
SIZE: ISO A1
FILE NAME: G-1004-HD-102

US ARMY CORPS OF ENGINEERS
JAPAN ENGINEER DISTRICT
OKINAWA, JAPAN
Jacobs
JACOBS GOVERNMENT SERVICES COMPANY
777 MAIN STREET | FORT WORTH, TX 76102
USA
JEG 0104662

FY25 REPAIR HVAC WIDEBAND SATCOM OPS B100
CAMP BUCKNER COMMUNICATIONS ANNEX
OKINAWA, JAPAN
PROJECT NUMBER:D3449305
PARTIAL DEMOLITION FLOOR PLAN - AREA B

SHEET ID
HD-102

BACKCHECK SUBMITTAL DESIGN

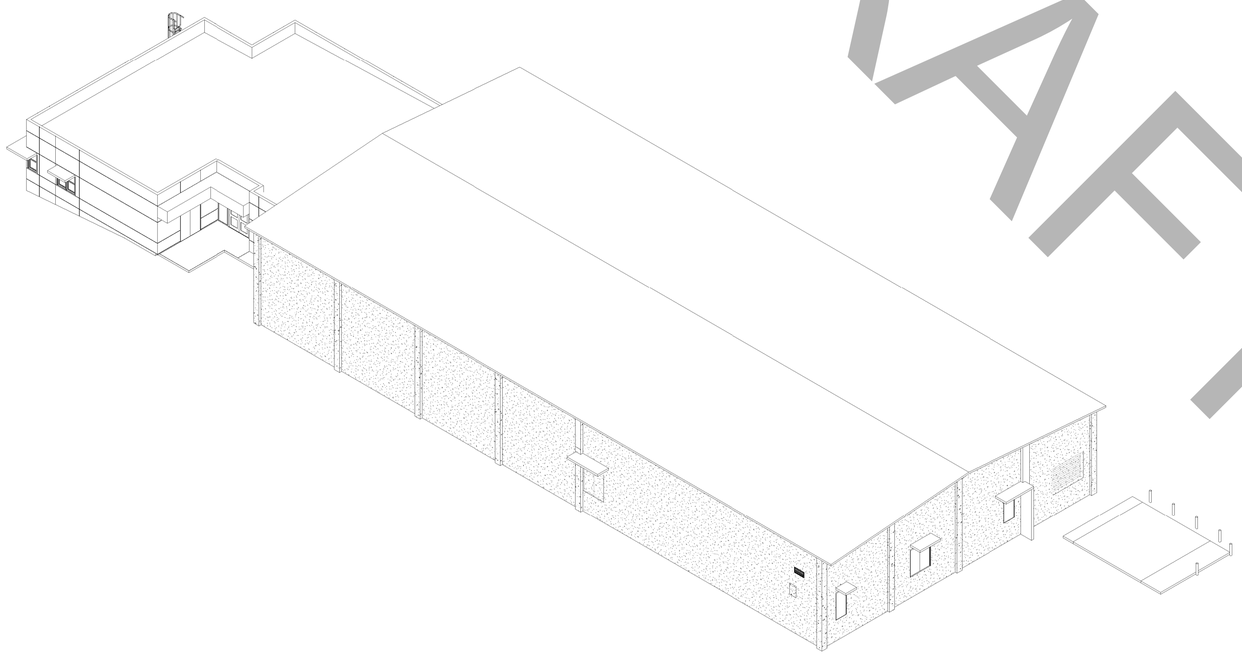

A2 ISOMETRIC VIEW

DRAFT

LEGEND

MATERIALS:

- CONCRETE
- EXISTING CONCRETE
- SOIL
- STEEL
- SAND
- CMU

ABBREVIATIONS

SEE SHEETS G-I002, G-I003 FOR ABBREVIATIONS.

STRUCTURAL LEGEND

PLATES

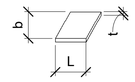

PL - b x L x t

Dx = DEFORMED REINFORCING BAR WITH x DIAMETER (mm)

f'c = SPECIFIED CONCRETE COMPRESSION STRENGTH AT 28 DAYS (x MPa)

fy = SPECIFIED YIELD STRENGTH OF REINFORCING STEEL (x N /mm²)

Fy = SPECIFIED YIELD STRENGTH OF STRUCTURAL STEEL (x N /mm²)

US Army Corps of Engineers
Japan District ®

FOR REVIEW ONLY

THESE DOCUMENTS ARE FOR CONCEPT DESIGN AND NOT INTENDED FOR CONSTRUCTION, BIDDING OR PERMIT PURPOSES. THEY WERE PREPARED BY, OR UNDER SUPERVISION OF:

HAKKI MURATLI
NAME

91086 — REGISTRATION #
09/04/2025 — DATE

TEXAS REGISTERED ENGINEERING FIRM F-2966

MARK	DESCRIPTION	DATE

ISSUE DATE: 09/04/2025
SOLICITATION NO.: -
CONTRACT NO.: -
DRAWING CODE: -

DESIGNED BY: H. MURATLI
DRAWN BY: S. DIMKOVIC
CHECKED BY: G. SERNA
SUBMITTED BY: A. GUERRA
SIZE: ISO A1
FILE NAME: S-001

US ARMY CORPS OF ENGINEERS
JAPAN ENGINEER DISTRICT
OKINAWA, JAPAN

Jacobs
JACOBS GOVERNMENT SERVICES COMPANY
777 MAIN STREET, FORT WORTH, TX 76102
USA

FY25 REPAIR HVAC WIDEBAND SATCOM OPS B100
CAMP BUCKNER COMMUNICATIONS ANNEX
OKINAWA, JAPAN
PROJECT NUMBER:D3449305

STRUCTURAL NOTES-LEGENDS-SYMBOLS

SHEET ID

S-001

S S-001-

FILE PATH: C:_Revit_Local_Models\2022\D3449305-S-3D_sladana.rvt
PLOT DATE: 8/28/2025 7:11:17 AM PLOTTED BY: PLOT SCALE: 1 : 50

BACKCHECK SUBMITTAL DESIGN

GENERAL NOTES

A. BUILDING AND DESIGN CODES:

1. IBC INTERNATIONAL BUILDING CODE (2024).
2. IEBC INTERNATIONAL EXISTING BUILDING CODE (2024)
3. AMERICAN SOCIETY OF CIVIL ENGINEERS (ASCE) 7-22 – MINIMUM DESIGN LOADS AND ASSOCIATED CRITERIA FOR BUILDINGS AND OTHER STRUCTURES.
4. ACI 318-19 BUILDING CODE REQUIREMENTS FOR STRUCTURAL CONCRETE
5. ACI 562-19 CODE REQUIREMENTS FOR ASSESSMENT, REPAIR AND REHABILITATION OF EXISTING CONCRETE STRUCTURES.
6. UFC 1-200-01 –DOD BUILDING CODE GENERAL BUILDING REQUIREMENTS WITH CHANGE 4 (2024)
7. UFC 3-301-01 – STRUCTURAL ENGINEERING WITH CHANGE 3, 2025
8. UFC 4-010-01 – DOD MINIMUM ANTITERRORISM STANDARDS FOR BUILDINGS, WITH CHANGE 3 (2024)
9. UNIFIED FACILITIES GUIDE SPECIFICATIONS (UFGS).
10. JAPANESE INDUSTRIAL STANDARDS (JIS)
11. USACE JAPAN DISTRICT DESIGN GUIDE V8 (2024)

B. DESIGN LOADS:

1. WIND LOADS ON CANOPY:
   a. RISK CATEGORY - IV
   b. EXPOSURE - C
   c. BASIC WIND SPEED (3 SECOND GUST): 306 km/h
2. SEISMIC LOADS:
   a. RISK CATEGORY - IV
   b. SEISMIC IMPORTANCE FACTOR - Ie = 1.5
   c. MAPPED SPECTRAL RESPONSE ACCELERATIONS - S_{DS}=2.02g, S_{D1}=0.93g
   d. SOIL SITE CLASS - DEFAULT SITE CLASS PER ASCE 7-22 SECTION 11.4.2.1
   e. SPECTRAL RESPONSE COEFFICIENT - Fp=1.21*W
   f. SEISMIC DESIGN CATEGORY F
3. SNOW LOADS:
   a. RISK CATEGORY IV
   b. GROUND SNOW LOAD – Pg = 0 kPa
   c. FROST DEPTH = 0 mm
4. CHILLER OPERATING WEIGHT = 5,344 LBS

C. GENERAL REQUIREMENTS:

1. VERIFY EXISTING CONDITIONS AND DIMENSIONS PRIOR TO BEGINNING WORK OR FABRICATING MATERIALS. NOTIFY CONTRACTING OFFICER OF DISCREPANCIES BEFORE PROCEEDING WITH ANY PHASE OF WORK.
2. DO NOT SCALE DRAWINGS FOR THE PURPOSE OF ESTABLISHING DIMENSIONS.
3. THE CONTRACT STRUCTURAL DOCUMENTS REPRESENT THE FINISHED STRUCTURE. THE CONTRACTOR IS RESPONSIBLE FOR THE MEANS AND METHODS OF CONSTRUCTION. PROVIDE ALL MEASURES REQUIRED TO PROTECT THE STRUCTURE, WORKMEN, AND OTHER PERSONS DURING CONSTRUCTION; INCLUDING BRACING, SHORING FOR CONSTRUCTION EQUIPMENT, SHORING FOR THE BUILDING, FORMS AND SCAFFOLDING, SHORING OF WALLS AND OTHER TEMPORARY SUPPORTS AS REQUIRED.

ADDITIONAL SUBMITTALS

A. THE FOLLOWING ITEMS ARE DEFERRED SUBMITTALS, PENDING APPROVAL OF THE CONTRACTING OFFICER:

1. MECHANICAL EQUIPMENT SUPPORTS AND CONNECTIONS TO THE EXISTING STRUCTURE, INCLUDING BRACING TO RESIST APPLICABLE LATERAL LOADS.

B. DEFERRED SUBMITTALS MUST BE ACCOMPANIED BY CALCULATIONS SIGNED BY A PROFESSIONAL ENGINEER.

C. DEFERRED SUBMITTALS MUST BE SUBMITTED PRIOR TO INSTALLATION AND MUST BE APPROVED BY THE CONTRACTING OFFICER FOR GENERAL CONFORMANCE TO THE DESIGN INTENT.

FOUNDATION NOTES

A. A CURRENT GEOTECHNICAL INVESTIGATION REPORT DOES NOT EXIST FOR THE PROJECT. DESIGN OF CONCRETE EQUIPMENT PADS IS BASED ON AN ALLOWABLE BEARING PRESSURE OF 96 kPa BASED ON THE NOTES IN THE EXISTING STRUCTURAL DRAWINGS FOR THE B100 OPERATIONS BUILDING DATED MAY 1989.

B. IT IS ASSUMED THAT THE ALLOWABLE BEARING PRESSURE NOTED ABOVE IS PERMITTED TO BE INCREASED BY ONE-THIRD FOR LOAD COMBINATIONS INCLUDING WIND AND EARTHQUAKE LOADS.

C. MAINTAIN SUBGRADE AND FILL MOISTURE CONTENT UNTIL FOUNDATIONS ARE PLACED.

D. ARRANGE FOR INDEPENDENT TESTING AGENCY (SPECIAL INSPECTOR) TO MONITOR CUT AND FILL OPERATIONS, AND PERFORM FIELD DENSITY AND MOISTURE CONTENT TESTS TO VERIFY COMPACTION AND APPROVE FOOTING SUBGRADE PRIOR TO PLACING CONCRETE.

E. DO NOT PLACE FOOTINGS OR SLABS AGAINST SUBGRADE CONTAINING FREE WATER OR FROST.

F. MAINTAIN PROPER SITE DRAINAGE DURING CONSTRUCTION TO ENSURE SURFACE RUNOFF AWAY FROM STRUCTURES AND TO PREVENT PONDING OF SURFACE RUNOFF NEAR THE STRUCTURES. KEEP OPEN EXCAVATIONS AROUND BUILDING DRY. BACKFILL AGAINST FOUNDATIONS AND GRADE BEAMS AS SOON AS PRACTICAL. PUMP WATER OUT OF OPEN EXCAVATIONS IF FLOODED PRIOR TO BACKFILLING.

G. REFER TO CIVIL DRAWINGS FOR LIMITS OF EXCAVATIONS.

H. CONTRACTOR SHALL TAKE CAUTION DURING EXCAVATIONS TO NOT CAUSE LOSS OF BEARING AND/OR LATERAL SUPPORT OF EXISTING STRUCTURES OR UTILITIES.

J. DURING CUT OPERATIONS, THE PRESENCE OF GROUNDWATER MAY BE EXPECTED.

CONCRETE NOTES

A. CONFORM TO ALL REQUIREMENTS OF ACI 301 "STANDARD SPECIFICATIONS FOR STRUCTURAL CONCRETE", ACI 318 "BUILDING CODE REQUIREMENTS FOR STRUCTURAL CONCRETE" AND JASS 5 "REINFORCED CONCRETE WORK"

B. PROVIDE CONCRETE AS INDICATED BELOW. PROVIDE BATCH MIXING, TRANSPORTATION, PLACING AND CURING OF CONCRETE IN ACCORDANCE WITH RECOMMENDATIONS OF ACI 301, ACI 318 AND ASTM C94 OR JIS A5308. USE TYPE I OR TYPE II PORTLAND CEMENT UNLESS OTHERWISE NOTED. PROVIDE ADMIXTURES AND SPECIAL REQUIREMENTS AS SPECIFIED.

1. NORMAL WEIGHT (2403 KG/M^3), f'$_C$=27 MPa, MAX W/C=0.52, SLUMP 100 mm+/-25mm, MAX AGGREGATE SIZE=25 mm, EXPOSURE CLASS F0, S1, W1, C2
   a. ALL CONCRETE NOT SPECIFICALLY NOTED

C. PROVIDE SUBMITTALS FOR THE FOLLOWING ITEMS FOR REVIEW AND APPROVAL BEFORE START OF CONSTRUCTION.

1. TESTING LABORATORY ACCREDITATION (PER JASS 5, JIS Q 1011, JIS Q 17011 AND JIS Q 17025)
2. CONCRETE MIX DESIGN
3. CONCRETE QUALITY CONTROL AND CURING PLANS (PER JASS AND MLIT-SS CHAPTER 6)
4. COMPRESSIVE STRENGTH TEST RESULTS (BASED ON A MINIMUM OF AT LEAST 3-100 mm x 200 mm SAMPLES FOR EACH POUR)

D. MAINTAIN THE FOLLOWING CONCRETE COVERAGE FOR REINFORCING STEEL UNLESS OTHERWISE NOTED:

1. CONCRETE CAST AGAINST EARTH - 75mm
2. CONCRETE EXPOSED TO WEATHER:
   a. D19 AND LARGER - 50mm
   b. D10 TO D16 - 38mm

E. UNLESS SPECIFIED BELOW, CONCRETE MUST REACH THE FOLLOWING PERCENTAGES OF ITS 28 DAY COMPRESSIVE STRENGTH (F'c) BEFORE FORMS MAY BE REMOVED:

1. EQUIPMENT PADS - 50 PERCENT
2. WALL OPENING INFILL - 75 PERCENT

F. PROVIDE CONCRETE MIXES DESIGNED BY A QUALIFIED TESTING LABORATORY FOR REVIEW AND APPROVAL BY THE CONTRACTING OFFICER.

G. PROVIDE CONSTRUCTION AND CONTROL JOINTS AS INDICATED ON DRAWINGS. HORIZONTAL CONSTRUCTION JOINTS ARE NOT ALLOWED UNLESS SPECIFICALLY NOTED OR APPROVED BY CONTRACTING OFFICER. NOTIFY CONTRACTING OFFICER OF PROPOSED CONSTRUCTION JOINT OR CONTROL JOINT LOCATIONS WHICH ARE DIFFERENT OR IN ADDITION TO JOINTS INDICATED ON DRAWINGS.

H. CHAMFER EXPOSED EDGES 20 mm UNLESS OTHERWISE NOTED.

J. WIRE BRUSH AND CLEAN CONSTRUCTION JOINTS PRIOR TO POURING NEW CONCRETE.

K. DO NOT INSTALL PIPES HORIZONTALLY WITHIN THE SLABS ON GRADE.

L. DO NOT USE ADMIXTURES OR CURING COMPOUNDS THAT MAY CAUSE DISCOLORATION OF THE CONCRETE SURFACE IN AREAS WHERE CONCRETE WILL BE VISIBLE.

REINFORCING STEEL NOTES

A. PROVIDE DETAILING, FABRICATION, AND INSTALLATION OF REINFORCING AND ACCESSORIES IN ACCORDANCE WITH ACI 315 AND ACI 318 OR JASS 5.

B. PROVIDE NEW STEEL REINFORCING BARS IN ACCORDANCE WITH JIS G3112 WITH THE FOLLOWING STRENGTHS AND GRADES FOR ALL CONCRETE CONSTRUCTION. DO NOT EXCEED ACTUAL YIELD STRENGTH OF REINFORCING BARS BASED ON MILL TESTS OF THE SPECIFIED YIELD STRENGTH BY MORE THAN 124 MPA. THE RATIO OF ACTUAL TENSILE STRENGTH TO THE ACTUAL YIELD STRENGTH MUST EXCEED 1.25.

1. D19 OR LARGER SD345 (Fy=345 MPa)
2. D10 TO 16 SD295 (Fy=295 MPa)

C. PROVIDE SHOP DRAWINGS FOR THE REINFORCING STEEL FOR REVIEW AND APPROVAL BEFORE START OF CONSTRUCTION.

D. DO NOT WELD OR BEND REINFORCEMENT IN THE FIELD UNLESS SPECIFICALLY SHOWN OR APPROVED BY CONTRACTING OFFICER .

E. WHEN SPECIFICALLY APPROVED, PROVIDE WELDED REINFORCEMENT IN ACCORDANCE WITH ASTM A706 OR JIS G 3112 USE LOW HYDROGEN ELECTRODES FOR WELDING OF REINFORCEMENT IN CONFORMANCE WITH "WELDING REINFORCEMENT STEEL, METAL INSERTS AND CONNECTIONS IN REINFORCED CONCRETE CONSTRUCTION", AMERICAN WELDING SOCIETY, AWS D1.4.

F. OPTION: PROVIDE GAS PRESSURE WELDED SPLICES FOR D19 AND LARGER BARS, SAW CUT ENDS OF BUTT SPLICE BARS, ENSURE PROPER ALIGNMENT, AND TRUE BEARING OF BARS. MAKE SPLICE IN ACCORDANCE WITH JIS Z 3881 AND JIS Z 3120.

G. PROVIDE BAR SUPPORT ACCESSORIES IN ACCORDANCE WITH THE LATEST ACI MANUAL OF STANDARD PRACTICE FOR DETAILING REINFORCED CONCRETE STRUCTURES.

EPOXY ATTACHED REINFORCEMENT DOWEL NOTES

A. INSTALL DOWELS IN ACCORDANCE WITH CURRENT ICC-ES REPORTS OR JAPAN CONSTRUCTION ANCHOR ASSOCIATION (JCAA) FOR USE IN CRACKED CONCRETE UNDER IBC 2024 (ACI 355.2, ACI 355.4 OR JCAA). SUBMIT MANUFACTURER REPORTS INDICATING COMPLIANCE WITH IBC/ACI OR JCAA.

B. INSTALL DOWELS PERPENDICULAR TO THE FACE OF CONCRETE, UNLESS OTHERWISE INDICATED IN THE DRAWINGS.

C. NON-DESTRUCTIVELY LOCATE AND AVOID EXISTING REINFORCING AND OTHER EMBEDDED ITEMS. IT IS PERMISSIBLE TO RELOCATE DOWELS UP TO 75mm TO AVOID CONFLICTS.

D. FOLLOW MANUFACTURER RECOMMENDATIONS FOR DIAMETER OF DRILLED HOLES AND DO NOT REDIRECT HOLES ALONG LENGTH OF DOWEL/ANCHOR.

E. DRILL HOLES IN CONTINUOUS OPERATION. BLOW DUST FROM THE HOLE USING COMPRESSED AIR.

F. FILL ABANDONED HOLES WITH EPOXY GROUT.

G. PERFORM CONTINUOUS INSPECTION BY THE TESTING LABORATORY OF EPOXY ANCHOR INSTALLATION TO ENSURE THAT HOLES ARE OF THE PROPER DIAMETER AND LENGTH, ARE PROPERLY CLEANED, AND THAT BOLTS ARE INSTALLED CORRECTLY.

POLYMER MODIFIED REPAIR MORTAR

A. USE REPAIR MORTARS WHERE INDICATED ON THE DRAWINGS AND AT THE FOLLOWING LOCATIONS:

1. EXPOSED REINFORCING
2. HONEYCOMBED OR SPALLED CONCRETE

B. PERFORM VISUAL INSPECTION, HAMMER TAPPING, CHAIN DRAG SOUNDING OR OTHER METHODS ACCEPTABLE BY THE CONTRACTING OFFICER TO UNCOVER POTENTIALLY DEFICIENT CONCRETE SURFACES IN WALLS AND SLABS.

C. CHIP OUT ALL LOOSE AND UNBOUND CONCRETE AS REQUIRED TO PROVIDE MINIMUM APPLICATION THICKNESS. CONCRETE SURFACE SHALL BE ROUGHENED TO A MINIMUM 6mm AMPLITUDE. MORTAR SHALL BE APPLIED TO SATURATED SURFACE DRY (SSD) SURFACE.

D. APPLY A SCRUB COAT OF REPAIR MORTAR TO EXISTING CONCRETE SURFACE PRIOR TO PLACING THE REPAIR MORTAR MIX. REPAIR MORTAR MUST BE APPLIED INTO WET SCRUB COAT BEFORE IT DRIES.

E. BONDING AGENT SHALL COMPLY WITH ASTM C-1059 STANDARDS. APPLY BONDING AGENT PRIOR TO APPLICATION OF REPAIR MORTAR. COMPLY WITH TIME BETWEEN APPLICATION OF BONDING AGENT AND REPAIR MORTAR REQUIREMENTS.

F. CLEAN EXPOSED REINFORCING STEEL BY OIL-FREE ABRASIVE BLASTING OR HIGH PRESSURE WATER BLASTING. VERIFY THAT THE REINFORCING STEEL AND CONCRETE SURFACE ARE FREE FROM DIRT, OIL, CEMENT FINES (SLURRY), OR ANY MATERIAL THAT MAY INTERFERE WITH THE BOND OF THE REPAIR MORTAR.

G. COAT EXPOSED REINFORCING STEEL WITH BONDING AGENT IN ACCORDANCE WITH MANUFACTURERS INSTRUCTIONS.

H. REPAIR MORTAR FOR HORIZONTAL, VERTICAL AND OVERHEAD SURFACES (HAND APPLIED):

1. APPLICATION THICKNESS:
   a. MINIMUM: 6mm
   b. MAXIMUM IN ONE LIFT: 25mm
2. FOR INSTALLATIONS GREATER THAN 25mm AND LESS THAN 100mm IN THICKNESS, EXTEND REPAIR MORTAR WITH 9mm COARSE AGGREGATE

J. REPAIR OF EXPOSED REINFORCING AND SPALLED OR HONEYCOMBED CONCRETE ON VERTICAL OR OVERHEAD SURFACES (FORM AND POUR OR PUMP):

1. PROVIDE FULLY SUPPORTED FORMWORK AS NECESSARY TO RESTORE STRUCTURAL MEMBER TO ORIGINAL CONFIGURATION. PROVIDE ACCESS CHUTES (FOR POUR INSTALLATIONS), VALVE INLETS (FOR PUMP INSTALLATIONS), AND VENT HOLES/TUBES IN FORMWORK AS NECESSARY.
2. APPLICATION THICKNESS
   a. MINIMUM: 6mm
   b. MAXIMUM IN ONE LIFT: 25mm

K. SUBMIT REPAIR PLAN AND QUANTITIES TO USACE JED. REPAIR WORK SHOULD NOT BE STARTED WITHOUT APPROVAL FROM USACE JED.

DRAFT

US Army Corps of Engineers
Japan District ®

FOR REVIEW ONLY
THESE DOCUMENTS ARE FOR CONCEPT DESIGN AND NOT INTENDED FOR CONSTRUCTION BIDDING OR PERMIT PURPOSES. THEY WERE PREPARED BY, OR UNDER SUPERVISION OF:
HAKKI MURATLI
NAME
91086 09/04/2025
REGISTRATION # DATE
TEXAS REGISTERED ENGINEERING FIRM F-2966

MARK	DESCRIPTION	DATE

ISSUE DATE: 09/04/2025
SOLICITATION NO.:
CONTRACT NO.:
DRAWING CODE:
DESIGNED BY: H. MURATLI
DRAWN BY: S. DONKOVIC
CHECKED BY: G. SERNA
SUBMITTED BY: A. GUERRA
SIZE: ISO A1
FILE NAME: S-002

US ARMY CORPS OF ENGINEERS
JAPAN ENGINEER DISTRICT
OKINAWA, JAPAN

Jacobs
JACOBS GOVERNMENT SERVICES COMPANY
777 MAIN STREET, SUITE 2000 FORT WORTH, TX 76102 USA

FY25 REPAIR HVAC WIDEBAND SATCOM OPS B100
CAMP BUCKNER COMMUNICATIONS ANNEX
OKINAWA, JAPAN
PROJECT NUMBER:D3449305

GENERAL STRUCTURAL NOTES

SHEET ID
S-002

S S-002-

FILE PATH: C:_Revit_Local_Models\2022\D3449305-S-3D_sladana.rvt
PLOT DATE: 8/28/2025 7:11:18 AM PLOTTED BY: PLOT SCALE: 1 : 1

BACKCHECK SUBMITTAL DESIGN

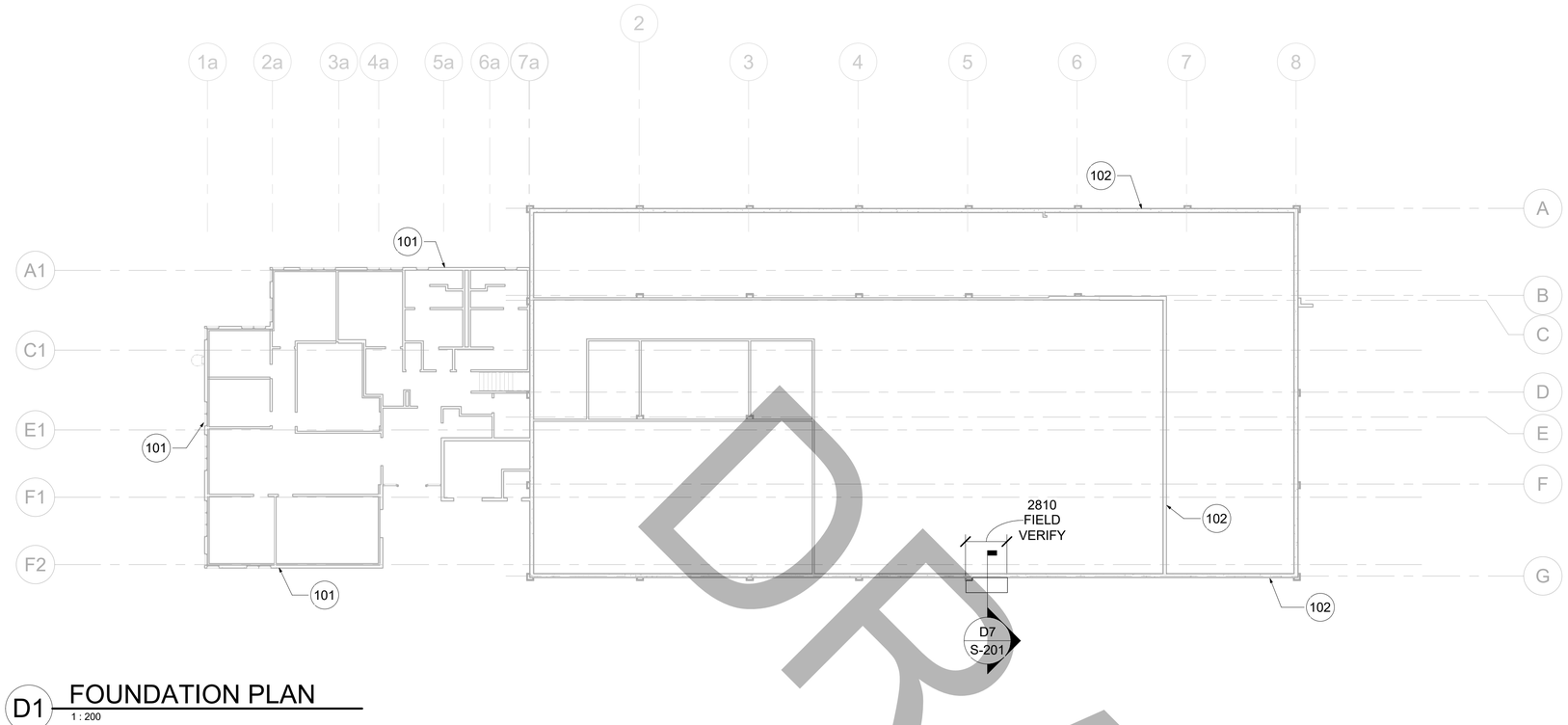

D1 FOUNDATION PLAN

1 : 200

DRAFT

GENERAL SHEET NOTES

ESTIMATE OF CRACK AND SPALL QUANTITIES IN THE CONCRETE WALLS AND SLABS (FOR BIDDING PURPOSES ONLY):

TOTAL LENGTH OF WALL CRACKS=168 M
TOTAL AREA OF WALL SPALLS=17 M2
TOTAL LENGTH OF SLAB CRACKS=336 M
TOTAL AREA OF SLAB SPALLS=34 M2

THE ABOVE ESTIMATES ARE NOT BASED ON ACTUAL OBSERVATIONS SINCE MOST OF THE WALLS AND FLOORS/ROOF ARE COVERED WITH ARCHITECTURAL FINISHES. THEY ARE BASED ON THE FOLLOWING ASSUMPTIONS.

WALL AND SLAB CRACK LENGTH (M)=0.1M/M2 OF FLOOR AREA
WALL AND SLAB SPALL AREA(M2)=0.01*FLOOR AREA
FLOOR AREA=1675 M2
SLAB CRACK AND SPALL ESTIMATES INCLUDE BOTH THE FIRST FLOOR SLAB AND THE ROOF SLAB

SHEET KEYNOTES

XX	
101	REPAIR THE CONCRETE CRACKS AND SPALLS IN EXTERIOR CONCRETE WALLS AND INTERIOR SLABS CURRENTLY VISIBLE AND THAT ARE UNCOVERED DURING THE HVAC EQUIPMENT REPLACEMENT ACCORDING TO DETAILS D1/S-201 AND D4/S-201
102	INFILL WALL OPENING DUE TO EXISTING LOUVER REMOVAL. REFER TO DETAIL A4/S-201

KEY PLAN

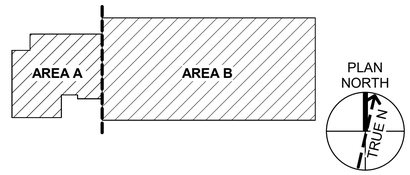

GRAPHIC SCALE(S)

0 4000 8000
SCALE: 1:200

US Army Corps of Engineers
Japan District ®

FOR REVIEW ONLY

THESE DOCUMENTS ARE FOR CONCEPT DESIGN AND NOT INTENDED FOR CONSTRUCTION BIDDING OR PERMIT PURPOSES. THEY WERE PREPARED BY, OR UNDER SUPERVISION OF:

HAKKI MURATLI
NAME
91086 09/04/2025
REGISTRATION # DATE
TEXAS REGISTERED ENGINEERING FIRM F-2966

MARK	DESCRIPTION	DATE

ISSUE DATE: 09/04/2025
SOLICITATION NO.:
CONTRACT NO.:
DRAWING CODE:

DESIGNED BY: H. MURATLI
DRAWN BY: S. DIMIJKOVIC
CHECKED BY: G. SERNA
SUBMITTED BY: A. GUERRA
SIZE: ISO A1
FILE NAME: S-100

US ARMY CORPS OF ENGINEERS
JAPAN ENGINEER DISTRICT
OKINAWA, JAPAN

Jacobs
JACOBS GOVERNMENT SERVICES COMPANY
777 MAIN STREET, FORT WORTH, TX 76102
USA

FY25 REPAIR HVAC WIDEBAND SATCOM OPS B100
CAMP BUCKNER COMMUNICATIONS ANNEX
OKINAWA, JAPAN
PROJECT NUMBER:D3449305

FOUNDATION PLAN

SHEET ID
S-100

S S-100-

FILE PATH: C:_Revit_Local_Models\2022\D3449305-S-3D_sladana.rvt
PLOT DATE: 8/28/2025 7:11:19 AM PLOTTED BY: PLOT SCALE: 1 : 200

BACKCHECK SUBMITTAL DESIGN

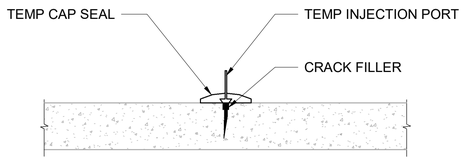

NOTES:

1. EPOXY INJECT CRACKS IN WALLS, FLOOR AND ROOF SLABS WIDER THAN 0.3mm SUBJECT TO EXTERIOR EXPOSURE, AND CRACKS WIDER THAN 0.4mm SUBJECT TO INTERIOR EXPOSURE.
2. CRACKS MAY BE HORIZONTAL, VERTICAL OR OVERHEAD. FOLLOW MANUFACTURER INSTALLATION INSTRUCTIONS DEPENDING ON ORIENTATION.
3. FOR EPOXY CRACK REPAIR, PROVIDE A TWO-COMPONENT HIGH OR LOW MODULUS ADHESIVE SUITABLE FOR OVERHEAD, VERTICAL, OR HORIZONTAL REPAIRS CONFORMING TO ASTM C881 TYPE III OR IV, GRADE 1 OR 3, CLASS C. SURFACE SHOULD BE FREE OF STANDING WATER, DUST, AND DEBRIS. FOLLOW MANUFACTURER'S INSTRUCTIONS FOR APPLICATION.
4. FOR CAP SEAL MATERIAL, PROVIDE A TWO-COMPONENT NON-SAGGING ADHESIVE CONFORMING TO ASTM C881, TYPE IV, GRADE 3, CLASS C. FOLLOW MANUFACTURER'S INSTRUCTIONS FOR APPLICATION.
5. REFER TO PLAN NOTES ON SHEET S-100 FOR QUANTITY ESTIMATE OF WALL AND SLAB CRACKS.

D1 CONCRETE SLAB/WALL CRACK EPOXY INJECTION DETAIL
NOT TO SCALE

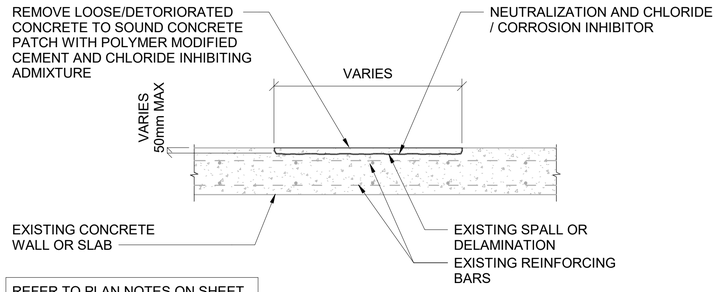

REFER TO PLAN NOTES ON SHEET S-100 FOR QUANTITY ESTIMATE OF WALL AND SLAB SPALLS

SHALLOW SPALLS - SECTION

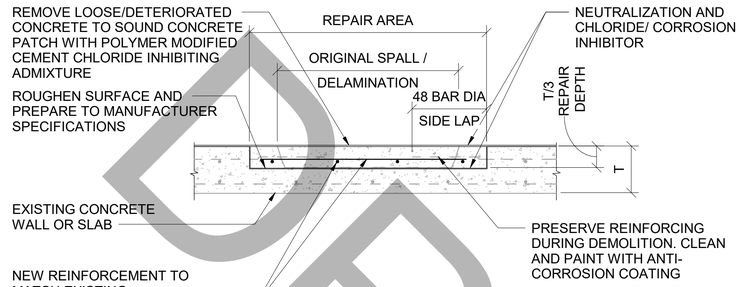

DEEP SPALLS - SECTION

D4 SLAB/WALL SPALL REPAIR DETAIL
NOT TO SCALE

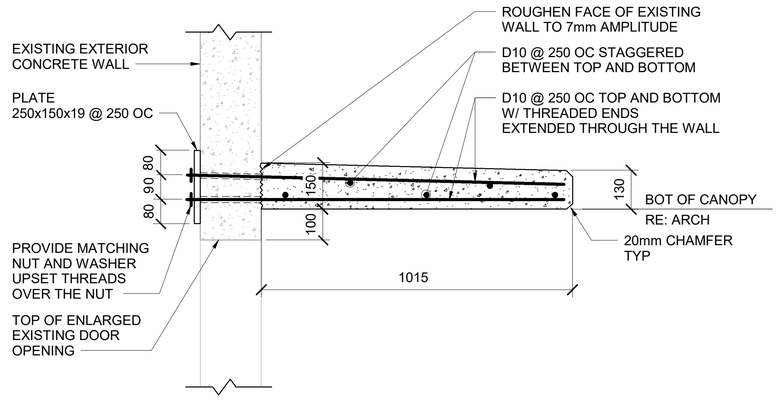

NOTES:
1. LOCATE CANOPY PER ARCH DRAWINGS
2. DO NOT CUT THROUGH EXISTING WALL REINF.
3. REINFORCING HOLES IN THE WALL SHALL NOT BE SMALLER THAN 18 mm AND LARGER THAN 25 mm IN DIAMETER.
4. FILL HOLES WITH EPOXY BEFORE CANOPY CONCRETE POUR.

D7 NEW CONCRETE CANOPY DETAIL
1 : 10

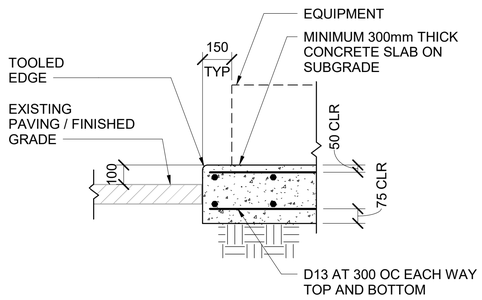

A1 EXTERIOR EQUIPMENT PAD
NOT TO SCALE

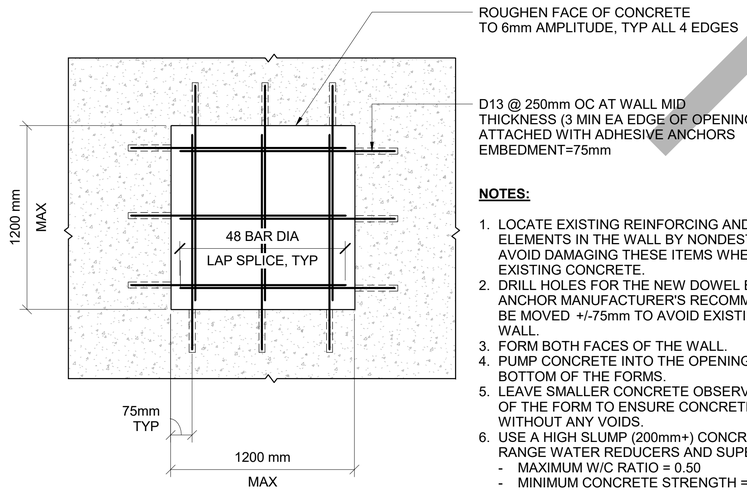

NOTES:

1. LOCATE EXISTING REINFORCING AND OTHER EMBEDDED ELEMENTS IN THE WALL BY NONDESTRUCTIVE MEANS AND AVOID DAMAGING THESE ITEMS WHEN ANCHORING TO EXISTING CONCRETE.
2. DRILL HOLES FOR THE NEW DOWEL BARS PER ADHESIVE ANCHOR MANUFACTURER'S RECOMMENDATIONS. HOLES CAN BE MOVED +/-75mm TO AVOID EXISTING REINFORCING IN THE WALL.
3. FORM BOTH FACES OF THE WALL.
4. PUMP CONCRETE INTO THE OPENING FROM HOLES AT THE BOTTOM OF THE FORMS.
5. LEAVE SMALLER CONCRETE OBSERVATION HOLES AT THE TOP OF THE FORM TO ENSURE CONCRETE FILLS THE OPENING WITHOUT ANY VOIDS.
6. USE A HIGH SLUMP (200mm+) CONCRETE MIXTURE WITH HIGH RANGE WATER REDUCERS AND SUPERPLASTICIZERS.
   - MAXIMUM W/C RATIO = 0.50
   - MINIMUM CONCRETE STRENGTH = 27 MPa

A4 EXISTING CONCRETE WALL OPENING INFILL DETAIL
NOT TO SCALE

DRAFT

US Army Corps of Engineers
Japan District ®

FOR REVIEW ONLY
THESE DOCUMENTS ARE FOR CONCEPT DESIGN AND NOT INTENDED FOR CONSTRUCTION BIDDING OR PERMIT PURPOSES. THEY WERE PREPARED BY, OR UNDER SUPERVISION OF:
HAKKI MURATLI
NAME
91086 — REGISTRATION #
09/04/2025 — DATE
TEXAS REGISTERED ENGINEERING FIRM F-2966

MARK	DESCRIPTION	DATE

ISSUE DATE: 09/04/2025
SOLICITATION NO.:
CONTRACT NO.:
DRAWING CODE:

DESIGNED BY: H. MURATLI
DRAWN BY: S. SOKOVOVIC
CHECKED BY: G. SIERNA
SUBMITTED BY: A. GUERRA
SIZE: ISO A1
FILE NAME: S-201

US ARMY CORPS OF ENGINEERS
JAPAN ENGINEER DISTRICT
OKINAWA, JAPAN

Jacobs
JACOBS GOVERNMENT SERVICES COMPANY
777 MAIN STREET, FORT WORTH, TX 76102 USA
#G-3444455

FY25 REPAIR HVAC WIDEBAND SATCOM OPS B100
CAMP BUCKNER COMMUNICATIONS ANNEX
OKINAWA, JAPAN
PROJECT NUMBER:D3449305

RETROFIT AND NEW CONSTRUCTION SECTIONS/DETAILS

SHEET ID
S-201

S S-201-

FILE PATH: C:_Revit_Local_Models\2022\D3449305-S-3D_sladana.rvt
PLOT DATE: 8/28/2025 7:11:20 AM PLOTTED BY: PLOT SCALE: As indicated

BACKCHECK SUBMITTAL DESIGN

3D PERSPECTIVES

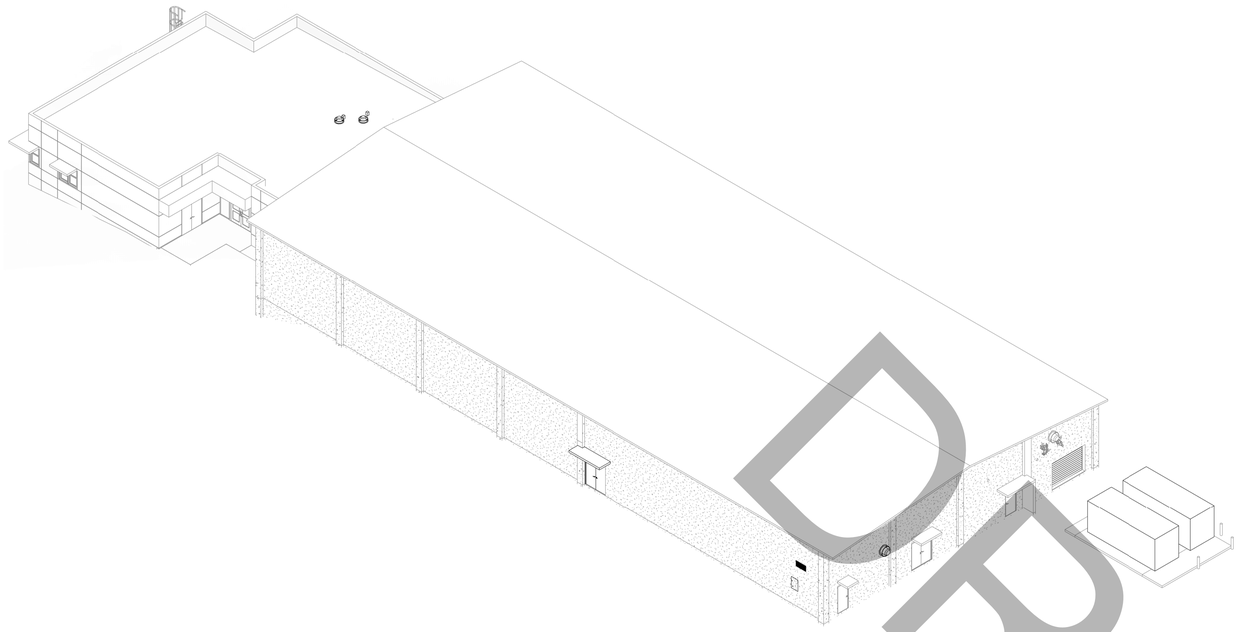

D1 PERSPECTIVE VIEW
SCALE: N.T.S.

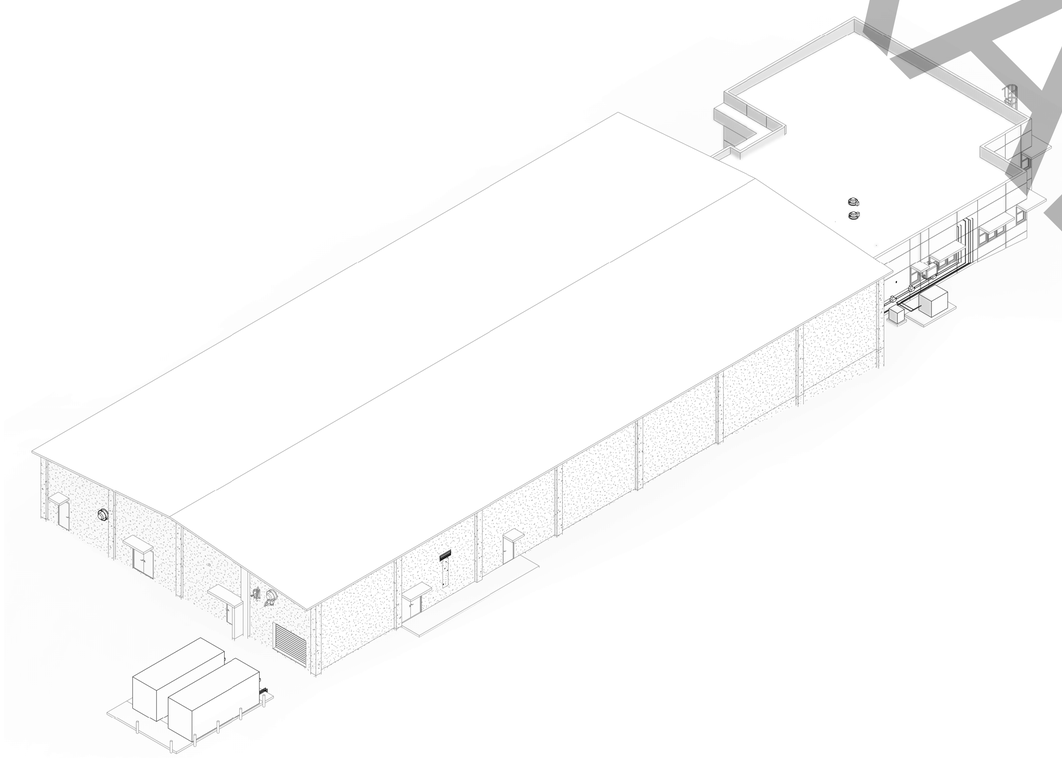

A1 PERSPECTIVE VIEW
SCALE: N.T.S.

DRAFT

ARCHITECTURAL LEGEND

DRAWING SYMBOLS

1i — WALL TYPE DESIGNATOR REFER PARTITION TYPES, SHEET A-601

Room name — ROOM NAME
101 — ROOM NUMBER

Name — SURFACE DESCRIPTION
Elevation — FINISHED ELEVATION

101A — DOOR MARK REFER DOOR SCHEDULE, SHEET A-601

100 TYP — KEYNOTE TAG REFER KEYNOTES LEGEND; TYPICAL NOTE

100 TYP — DEMOLITION KEYNOTE TAG REFER KEYNOTES LEGEND; TYPICAL NOTE

MOUNTING HEIGHTS

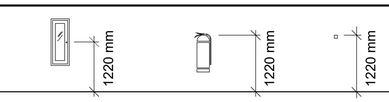

CABINET FIRE EXTINGUISHERS | BRACKET FIRE EXTINGUISHERS | FIRE PULL

STANDARD DOOR LOCATIONS

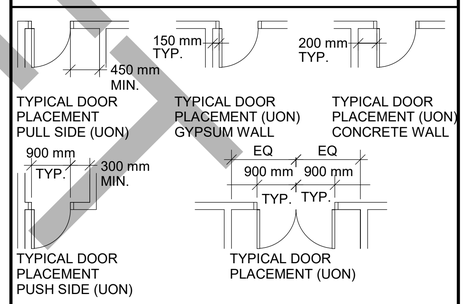

TYPICAL DOOR PLACEMENT PULL SIDE (UON)
TYPICAL DOOR PLACEMENT (UON) GYPSUM WALL
TYPICAL DOOR PLACEMENT (UON) CONCRETE WALL
TYPICAL DOOR PLACEMENT PUSH SIDE (UON)
TYPICAL DOOR PLACEMENT (UON)

MATERIALS LEGEND

- CONCRETE
- SOIL
- FIBER REINFORCED PANEL
- CHAIN-LINK
- GYPSUM BOARD / EXTERIOR SHEATHING
- PROTECTION BOARD
- FIBERGLASS BATT INSULATION

PROJECT GENERAL NOTES

A INSTALLATION AND WORK FOR THIS PROJECT SHALL BE IN ACCORDANCE WITH THE CONTRACT DRAWINGS AND SPECIFICATIONS.

B FIELD VERIFY EXISTING CONDITIONS AND VERIFY CONSTRUCTION LAYOUT PRIOR TO COMMENCEMENT OF CONSTRUCTION.

C BUILDING RENOVATION DRAWINGS INDICATE THE GENERAL DESIGN INTENT FOR THE PURPOSE OF CONSTRUCTING SYSTEMS AND ASSEMBLIES. EXISTING SERVICES HAVE BEEN IDENTIFIED BASED UPON THE EXISTING AS-BUILT DRAWINGS. ANY UNDOCUMENTED SERVICES AND ASSEMBLIES ENCOUNTERED DURING CONSTRUCTION SHALL BE IDENTIFIED AND DOCUMENTED TO THE CONTRACTING OFFICER. VERIFY SIZE, LOCATION AND CHARACTERISTIC OF ALL EQUIPMENT TO BE FURNISHED WITH MANUFACTURERS OR SUPPLIERS BEFORE BEGINNING CONSTRUCTION.

D DAMAGE CAUSED BY REMOVAL OPERATIONS OR CONSTRUCTION ACTIVITY IN AREAS OF THE PROJECT SITE SHALL BE REPAIRED/RESTORED TO THE APPROXIMATE ORIGINAL CONDITIONS OR BETTER AND SATISFACTORY TO THE CONTRACTING OFFICER AT NO COST TO THE GOVERNMENT.

E MECHANICAL, ELECTRICAL, FURNISHINGS AND OTHER MISCELLANEOUS ITEMS WHICH ARE REQUIRED TO BE REMOVED PRIOR TO THE INSTALLATION OF WORK SHALL BE TEMPORARILY REMOVED AND REINSTALLED AS DIRECTED BY THE CONTRACTING OFFICER.

F COORDINATE WITH THE CONTRACTING OFFICER THE SALVAGING OF SPECIFIC ITEMS AND PROTECTION OF EXISTING EQUIPMENT TO REMAIN IN PLACE.

G COORDINATE WITH THE CONTRACTING OFFICER FOR DEMOLITION OF EXISTING SYSTEMS LOCATED BEYOND THE PERIMETER OF THE BUILDING AND PROTECTION/SEPARATION OF ADJACENT AREAS TO REMAIN IN USE.

H COORDINATE WITH CONTRACTING OFFICER TO IDENTIFY AND MAINTAIN SECURE AREAS WHILE THE BUILDING IS BEING RENOVATED.

J REMOVE AND REINSTALL ANY SIGN, FIXTURES, RECEPTACLES, ETC. AS NEEDED TO ACCOMMODATE CONSTRUCTION.

K SECURE AND WEATHER PROTECT ROUGH OPENINGS DURING NON-WORKING HOURS.

L FOR ADDITIONAL PHASING AND DEMOLITION NOTES REFER TO SHEETS GI010 THRU GI011 AND AD101 THRU AD131

M INDICATED SIZE AND DIMENSIONS ARE IN MILLIMETERS UNLESS NOTED OTHERWISE.

N DO NOT SCALE THE DRAWINGS FOR CONSTRUCTION PURPOSES.

P FINISH FLOOR ELEVATION OF 0mm AT B100 IS A RELATIVE ELEVATION USED FOR DESIGN COORDINATION.

Q FLOOR PLAN AND REFLECTED CEILING PLAN DIMENSIONS ARE TO FACE OF EXISTING FINISH, GYPSUM BOARD, OR FACE OF CONCRETE.

US Army Corps of Engineers
Japan District ®

FOR REVIEW ONLY
THESE DOCUMENTS ARE FOR CONCEPT DESIGN AND NOT INTENDED FOR CONSTRUCTION, BIDDING OR PERMIT PURPOSES. THEY WERE PREPARED BY, OR UNDER SUPERVISION OF:
Christopher M. Surles — NAME
TX 23638 — REGISTRATION # — 09/04/2025 DATE
TEXAS REGISTERED ENGINEERING FIRM F-2966

MARK	DESCRIPTION	DATE

ISSUE DATE: 09/04/2025
SOLICITATION NO.:
CONTRACT NO.:
DRAWING CODE:

DESIGNED BY: C.SURLES
DRAWN BY: J.METZLER
CHECKED BY: K. CARLSON
SUBMITTED BY: A. GUERRA
SIZE: ISO A1
FILE NAME: A-001

US ARMY CORPS OF ENGINEERS
JAPAN ENGINEER DISTRICT
OKINAWA, JAPAN

Jacobs
JACOBS GOVERNMENT SERVICES COMPANY
777 MAIN STREET, FORT WORTH, TX 76102
USA

FY25 REPAIR HVAC WIDEBAND SATCOM OPS B100
CAMP BUCKNER COMMUNICATIONS ANNEX
OKINAWA, JAPAN
PROJECT NUMBER:D3449305

GENERAL NOTES AND PERSPECTIVES

SHEET ID
A-001

A A-001-

FILE PATH: C:_Revit_Local_Models\2022\D3449305-A-3D_Jake.Metzler.rvt
PLOT DATE: 8/29/2025 10:32:10 AM PLOTTED BY: PLOT SCALE: 1 : 64

BACKCHECK SUBMITTAL DESIGN

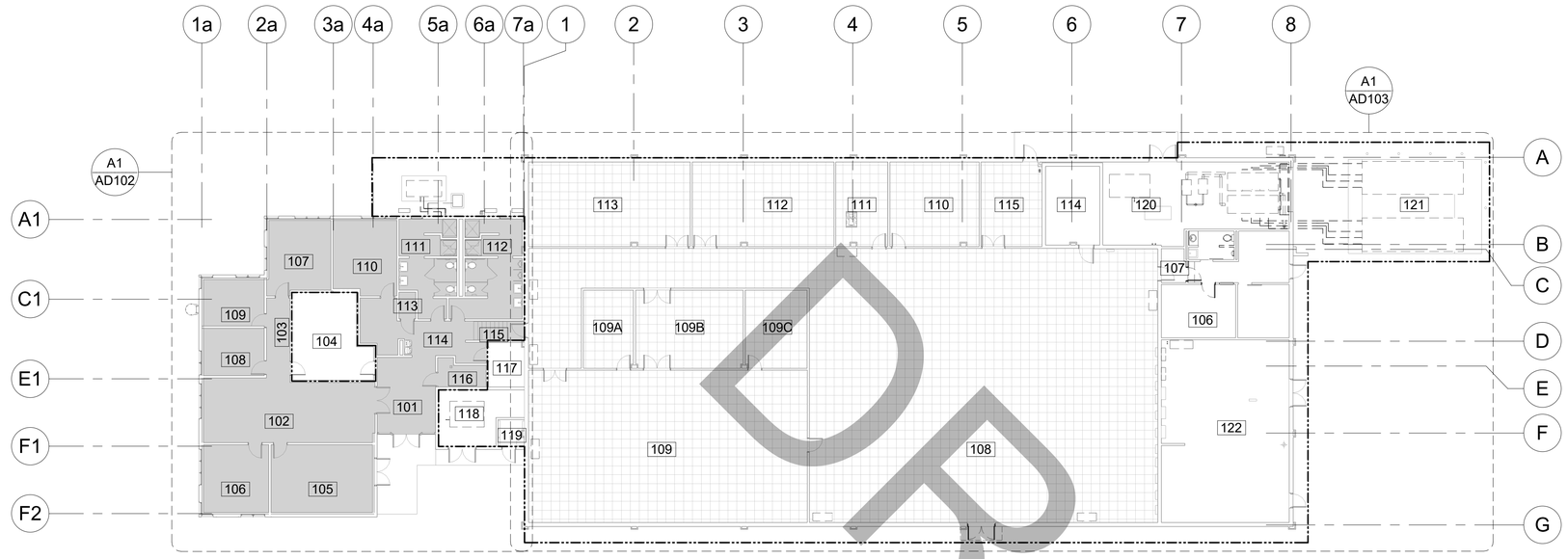

D1 OVERALL DEMOLITION FLOOR PLAN

1 : 200

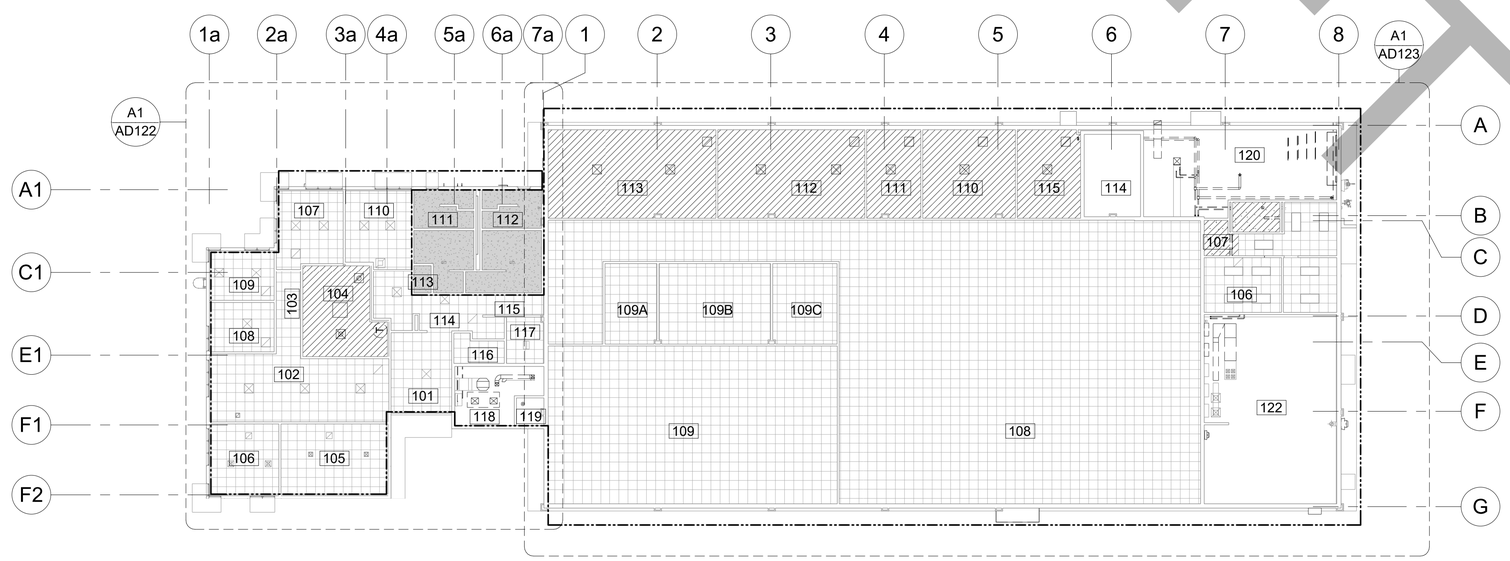

A1 OVERALL DEMOLITION REFLECTED CEILING PLAN

1 : 200

DRAFT

GENERAL NOTES - DEMOLITION PLANS

A	EXISTING CONSTRUCTION SHOWN BASED UPON OWNER FURNISHED PLANS AND ONSITE OBSERVATION. FIELD VERIFY EXISTING CONDITIONS AND VERIFY CONSTRUCTION LAYOUT PRIOR TO COMMENCEMENT OF CONSTRUCTION. REPORT ANY DISCREPANCIES BETWEEN DRAWINGS AND ACTUAL FIELD CONDITIONS TO THE CONTRACTING OFFICER PRIOR TO PROCEEDING WITH WORK
B	COORDINATE THE PROJECT SCHEDULE OF WORK AND THE PROJECT SAFETY DEMARCATIONS WITH THE CONTRACTING OFFICER
C	COORDINATE WITH THE CONTRACTING OFFICER FOR DEMOLITION AND PHASING SCHEDULE PRIOR TO COMMENCEMENT OF DEMOLITION
D	PROTECT AND MAINTAIN EXISTING ROOF, WALLS, FLOORING, PLUMBING, ELECTRICAL, LIGHTING, AND FIRE PROTECTION THAT IS REQUIRED TO REMAIN IN SERVICE
E	REFER AND COORDINATE WITH CIVIL, STRUCTURAL, MECHANICAL, PLUMBING, FIRE PROTECTION, AND ELECTRICAL DRAWINGS FOR ADDITIONAL DEMOLITION SCOPE AND PHASING
F	IN THE AREAS DESIGNATED FOR CONSTRUCTION, REMOVE HARDWARE, HANGERS, ANCHOR SYSTEMS, MISC. METAL ATTACHMENTS, ETC. AS REQUIRED. PATCH AND FINISH TO MATCH ADJACENT SURFACE
G	REFER STRUCTURAL, MECHANICAL, PLUMBING, FIRE PROTECTION, AND ELECTRICAL DRAWINGS FOR LOCATIONS OF ADDITIONAL PENETRATIONS IF REQUIRED
H	PATCH AND REPAIR EXISTING WALLS, FLOORS, AND ROOF DAMAGED FROM THE REMOVAL OF ASSOCIATED ACCESSORIES TO BE FREE OF DEFECTS AND PREPARE TO RECEIVE NEW CONSTRUCTION IN THE AREA OF WORK
J	COORDINATE DISPOSAL OF DEMOLISHED MATERIALS WITH CONTRACTING OFFICER
K	REMOVE EXISTING FLOOR FINISHES, WALL BASES, CEILING SYSTEMS, UTILITIES AND UTILITY SUPPORTS AND OTHER MISCELLANEOUS CONSTRUCTION IN AFFECTED AREAS AS REQUIRED TO PROVIDE A CLEAN SPACE TO INITIATE NEW CONSTRUCTION
L	FIELD VERIFY EXISTING CONDITIONS, DIMENSIONS AND VERIFY CONSTRUCTION LAYOUT PRIOR TO COMMENCEMENT OF CONSTRUCTION
M	STOP WORK IMMEDIATELY AND NOTIFY THE CONTRACTING OFFICER IF ASBESTOS CONTAINING MATERIALS ARE DISCOVERED NOT IDENTIFIED IN THE ASBESTOS SURVEY
N	COORDINATE PAINTED SURFACES ASSUMED TO CONTAIN LEAD IN ACCORDANCE WITH THE OSHA LEAD IN CONSTRUCTION STANDARD 39 CFR 1926.62
P	REMOVE AND SALVAGE OR REPLACE EXISTING DOOR THRESHOLDS AS REQUIRED FOR NEW FLOORING FINISHES
Q	COORDINATE WITH THE CONTRACTING OFFICER FOR LOCATION OF TEMPORARY BARRIER PARTITION AS REQUIRED FOR RENOVATION WORK

DEMOLITION OVERALL PLANS LEGEND

- APPROXIMATE AREAS OF DEMOLITION
- EXISTING ITEMS TO BE REMOVED
- EXISTING TO REMAIN
- EXISTING CEILING TO BE REMOVED
- REMOVE EXISTING DOOR AND/OR DOOR FRAME SYSTEM WHERE INDICATED.
- NOT IN SCOPE

KEY PLAN

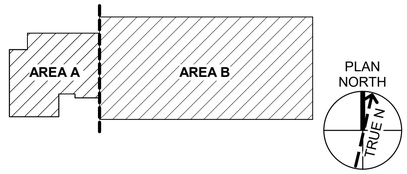

GRAPHIC SCALE(S)

0 4000 8000

SCALE: 1:200

US Army Corps of Engineers
Japan District ®

FOR REVIEW ONLY

THESE DOCUMENTS ARE FOR CONCEPT DESIGN AND NOT INTENDED FOR CONSTRUCTION, BIDDING OR PERMIT PURPOSES. THEY WERE PREPARED BY, OR UNDER SUPERVISION OF:

Christopher M. Surles
NAME

TX 23638 — REGISTRATION #
09/04/2025 — DATE

TEXAS REGISTERED ENGINEERING FIRM F-2966

MARK	DESCRIPTION	DATE

ISSUE DATE: 09/04/2025
SOLICITATION NO.:
CONTRACT NO.:
DRAWING CODE: AD
DRAWING TYPE:

DESIGNED BY: C.SURLES
DRAWN BY: J.METZLER
CHECKED BY: K.CARLSON
SUBMITTED BY: A.GUERRA
SIZE: ISO A1
FILE NAME: AD101

US ARMY CORPS OF ENGINEERS
JAPAN ENGINEER DISTRICT
OKINAWA, JAPAN

Jacobs
JACOBS GOVERNMENT SERVICES COMPANY
777 MAIN STREET, FORT WORTH, TX 76102
USA

FY25 REPAIR HVAC WIDEBAND SATCOM OPS B100
CAMP BUCKNER COMMUNICATIONS ANNEX
OKINAWA, JAPAN
PROJECT NUMBER:D3449305

OVERALL DEMOLITION PLANS

SHEET ID

AD101

AD AD101- AD

FILE PATH: C:_Revit_Local_Models\2022\D3449305-A-3D_Jake.Metzler.rvt
PLOT DATE: 8/29/2025 10:32:29 AM PLOTTED BY: PLOT SCALE: As indicated

BACKCHECK SUBMITTAL DESIGN

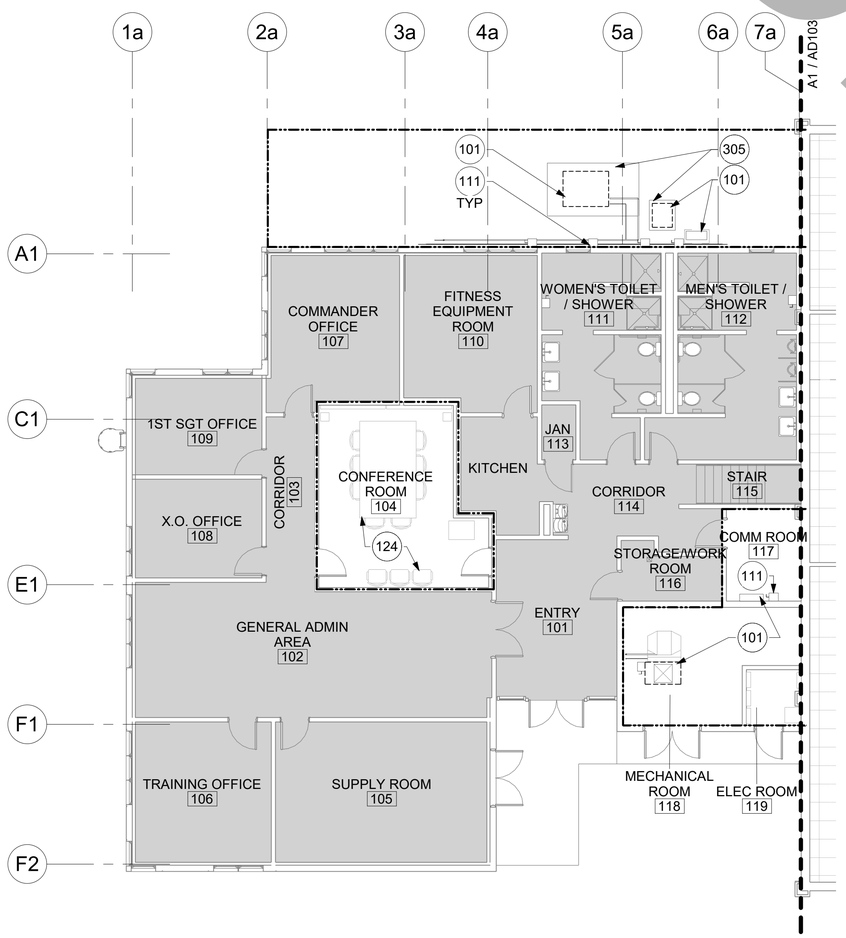

A1 PARTIAL DEMOLITION FLOOR PLAN - AREA A

1 : 100

DRAFT

DEMOLITION OVERALL PLANS LEGEND

- APPROXIMATE AREAS OF DEMOLITION
- EXISTING ITEMS TO BE REMOVED
- EXISTING TO REMAIN
- EXISTING CEILING TO BE REMOVED
- REMOVE EXISTING DOOR AND/OR DOOR FRAME SYSTEM WHERE INDICATED.
- NOT IN SCOPE

GENERAL NOTES - DEMOLITION PLANS

A	EXISTING CONSTRUCTION SHOWN BASED UPON OWNER FURNISHED PLANS AND ONSITE OBSERVATION. FIELD VERIFY EXISTING CONDITIONS AND VERIFY CONSTRUCTION LAYOUT PRIOR TO COMMENCEMENT OF CONSTRUCTION. REPORT ANY DISCREPANCIES BETWEEN DRAWINGS AND ACTUAL FIELD CONDITIONS TO THE CONTRACTING OFFICER PRIOR TO PROCEEDING WITH WORK
B	COORDINATE THE PROJECT SCHEDULE OF WORK AND THE PROJECT SAFETY DEMARCATIONS WITH THE CONTRACTING OFFICER
C	COORDINATE WITH THE CONTRACTING OFFICER FOR DEMOLITION AND PHASING SCHEDULE PRIOR TO COMMENCEMENT OF DEMOLITION
D	PROTECT AND MAINTAIN EXISTING ROOF, WALLS, FLOORING, PLUMBING, ELECTRICAL, LIGHTING, AND FIRE PROTECTION THAT IS REQUIRED TO REMAIN IN SERVICE
E	REFER AND COORDINATE WITH CIVIL, STRUCTURAL, MECHANICAL, PLUMBING, FIRE PROTECTION, AND ELECTRICAL DRAWINGS FOR ADDITIONAL DEMOLITION SCOPE AND PHASING
F	IN THE AREAS DESIGNATED FOR CONSTRUCTION, REMOVE HARDWARE, HANGERS, ANCHOR SYSTEMS, MISC. METAL ATTACHMENTS, ETC. AS REQUIRED. PATCH AND FINISH TO MATCH ADJACENT SURFACE
G	REFER STRUCTURAL, MECHANICAL, PLUMBING, FIRE PROTECTION, AND ELECTRICAL DRAWINGS FOR LOCATIONS OF ADDITIONAL PENETRATIONS IF REQUIRED
H	PATCH AND REPAIR EXISTING WALLS, FLOORS, AND ROOF DAMAGED FROM THE REMOVAL OF ASSOCIATED ACCESSORIES TO BE FREE OF DEFECTS AND PREPARE TO RECEIVE NEW CONSTRUCTION IN THE AREA OF WORK
J	COORDINATE DISPOSAL OF DEMOLISHED MATERIALS WITH CONTRACTING OFFICER
K	REMOVE EXISTING FLOOR FINISHES, WALL BASES, CEILING SYSTEMS, UTILITIES AND UTILITY SUPPORTS AND OTHER MISCELLANEOUS CONSTRUCTION IN AFFECTED AREAS AS REQUIRED TO PROVIDE A CLEAN SPACE TO INITIATE NEW CONSTRUCTION
L	FIELD VERIFY EXISTING CONDITIONS, DIMENSIONS AND VERIFY CONSTRUCTION LAYOUT PRIOR TO COMMENCEMENT OF CONSTRUCTION
M	STOP WORK IMMEDIATELY AND NOTIFY THE CONTRACTING OFFICER IF ASBESTOS CONTAINING MATERIALS ARE DISCOVERED NOT IDENTIFIED IN THE ASBESTOS SURVEY
N	COORDINATE PAINTED SURFACES ASSUMED TO CONTAIN LEAD IN ACCORDANCE WITH THE OSHA LEAD IN CONSTRUCTION STANDARD 39 CFR 1926.62
P	REMOVE AND SALVAGE OR REPLACE EXISTING DOOR THRESHOLDS AS REQUIRED FOR NEW FLOORING FINISHES
Q	COORDINATE WITH THE CONTRACTING OFFICER FOR LOCATION OF TEMPORARY BARRIER PARTITION AS REQUIRED FOR RENOVATION WORK

SHEET KEYNOTES

101	EXISTING MECHANICAL EQUIPMENT TO BE REMOVED. CLEAN, PATCH AND PREPARE EXISTING AFFECTED SURFACES FOR INSTALL. REFER MECHANICAL.
111	EXISTING ELECTRICAL EQUIPMENT. REFER ELECTRICAL FOR REMOVAL.
124	REMOVE AND SALVAGE EXISTING FURNITURE IN THEIR ENTIRETY FOR CEILING DEMOLITION AND CONSTRUCTION; REINSTALL AFTER CEILING AND OTHER DISCIPLINE WORK IS COMPLETE.
305	EXISTING CONCRETE SLAB AT MECHANICAL UNITS TO REMAIN UNDISTURBED.

KEY PLAN

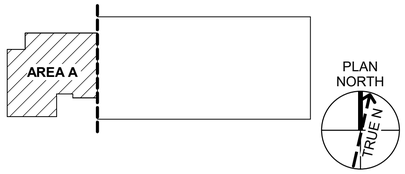

GRAPHIC SCALE(S)

0 2000 4000

SCALE: 1:100

US Army Corps of Engineers
Japan District ®

FOR REVIEW ONLY

THESE DOCUMENTS ARE FOR CONCEPT DESIGN AND NOT INTENDED FOR CONSTRUCTION, BIDDING OR PERMIT PURPOSES. THEY WERE PREPARED BY, OR UNDER SUPERVISION OF:

Christopher M. Surles
NAME

TX 23638 — REGISTRATION #
09/04/2025 — DATE

TEXAS REGISTERED ENGINEERING FIRM F-2966

MARK	DESCRIPTION	DATE

DESIGNED BY: C.SURLES
DRAWN BY: J.METZLER
CHECKED BY: K.CARLSON
SUBMITTED BY: A.GUERRA
ISSUE DATE: 09/04/2025
SOLICITATION NO.:
CONTRACT NO.:
DRAWING CODE:
SIZE: ISO A1
FILE NAME: AD102

US ARMY CORPS OF ENGINEERS
JAPAN ENGINEER DISTRICT
OKINAWA, JAPAN

Jacobs
JACOBS GOVERNMENT SERVICES COMPANY
777 MAIN STREET, FORT WORTH, TX 76102
USA

FY25 REPAIR HVAC WIDEBAND SATCOM OPS B100
CAMP BUCKNER COMMUNICATIONS ANNEX
OKINAWA, JAPAN
PROJECT NUMBER:D3449305

PARTIAL DEMOLITION FLOOR PLAN - AREA A

SHEET ID

AD102

AD AD102- AD

FILE PATH: C:_Revit_Local_Models\2022\D3449305-A-3D_Jake.Metzler.rvt
PLOT DATE: 8/29/2025 10:32:31 AM PLOTTED BY: PLOT SCALE: As indicated

BACKCHECK SUBMITTAL DESIGN

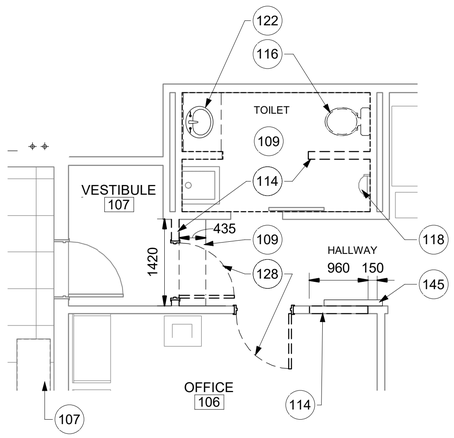

ENLARGED DEMOLITION PLAN - VESTIBULE AND TOILET

E1 1 : 50

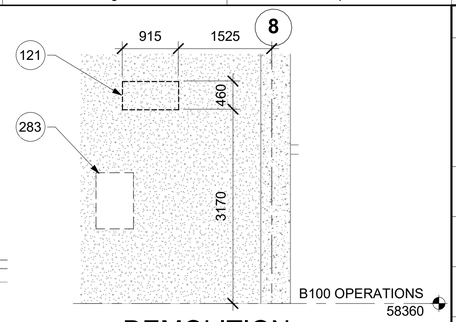

DEMOLITION LOUVER ELEVATION

F3 1 : 50

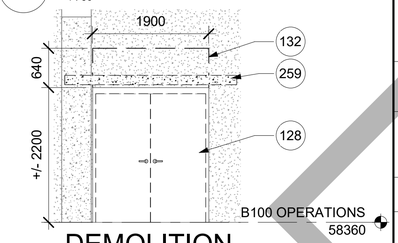

DEMOLITION CANOPY ELEVATION

E3 1 : 50

GENERAL NOTES - DEMOLITION PLANS

A	EXISTING CONSTRUCTION SHOWN BASED UPON OWNER FURNISHED PLANS AND ONSITE OBSERVATION. FIELD VERIFY EXISTING CONDITIONS AND VERIFY CONSTRUCTION LAYOUT PRIOR TO COMMENCEMENT OF CONSTRUCTION. REPORT ANY DISCREPANCIES BETWEEN DRAWINGS AND ACTUAL FIELD CONDITIONS TO THE CONTRACTING OFFICER PRIOR TO PROCEEDING WITH WORK
B	COORDINATE THE PROJECT SCHEDULE OF WORK AND THE PROJECT SAFETY DEMARCATIONS WITH THE CONTRACTING OFFICER
C	COORDINATE WITH THE CONTRACTING OFFICER FOR DEMOLITION AND PHASING SCHEDULE PRIOR TO COMMENCEMENT OF DEMOLITION
D	PROTECT AND MAINTAIN EXISTING ROOF, WALLS, FLOORING, PLUMBING, ELECTRICAL, LIGHTING, AND FIRE PROTECTION THAT IS REQUIRED TO REMAIN IN SERVICE
E	REFER AND COORDINATE WITH CIVIL, STRUCTURAL, MECHANICAL, PLUMBING, FIRE PROTECTION, AND ELECTRICAL DRAWINGS FOR ADDITIONAL DEMOLITION SCOPE AND PHASING
F	IN THE AREAS DESIGNATED FOR CONSTRUCTION, REMOVE HARDWARE, HANGERS, ANCHOR SYSTEMS, MISC. METAL ATTACHMENTS, ETC. AS REQUIRED. PATCH AND FINISH TO MATCH ADJACENT SURFACE
G	REFER STRUCTURAL, MECHANICAL, PLUMBING, FIRE PROTECTION, AND ELECTRICAL DRAWINGS FOR LOCATIONS OF ADDITIONAL PENETRATIONS IF REQUIRED
H	PATCH AND REPAIR EXISTING WALLS, FLOORS, AND ROOF DAMAGED FROM THE REMOVAL OF ASSOCIATED ACCESSORIES TO BE FREE OF DEFECTS AND PREPARE TO RECEIVE NEW CONSTRUCTION IN THE AREA OF WORK
J	COORDINATE DISPOSAL OF DEMOLISHED MATERIALS WITH CONTRACTING OFFICER
K	REMOVE EXISTING FLOOR FINISHES, WALL BASES, CEILING SYSTEMS, UTILITIES AND UTILITY SUPPORTS AND OTHER MISCELLANEOUS CONSTRUCTION IN AFFECTED AREAS AS REQUIRED TO PROVIDE A CLEAN SPACE TO INITIATE NEW CONSTRUCTION

GENERAL NOTES - DEMOLITION PLANS

L	FIELD VERIFY EXISTING CONDITIONS, DIMENSIONS AND VERIFY CONSTRUCTION LAYOUT PRIOR TO COMMENCEMENT OF CONSTRUCTION
M	STOP WORK IMMEDIATELY AND NOTIFY THE CONTRACTING OFFICER IF ASBESTOS CONTAINING MATERIALS ARE DISCOVERED NOT IDENTIFIED IN THE ASBESTOS SURVEY
N	COORDINATE PAINTED SURFACES ASSUMED TO CONTAIN LEAD IN ACCORDANCE WITH THE OSHA LEAD IN CONSTRUCTION STANDARD 39 CFR 1926.62
P	REMOVE AND SALVAGE OR REPLACE EXISTING DOOR THRESHOLDS AS REQUIRED FOR NEW FLOORING FINISHES
Q	COORDINATE WITH THE CONTRACTING OFFICER FOR LOCATION OF TEMPORARY BARRIER PARTITION AS REQUIRED FOR RENOVATION WORK

SHEET KEYNOTES

101	EXISTING MECHANICAL EQUIPMENT TO BE REMOVED. CLEAN, PATCH AND PREPARE EXISTING AFFECTED SURFACES FOR INSTALL. REFER MECHANICAL.
103	EXISTING CONCRETE SLAB AT MECHANICAL CHILLERS TO REMAIN UNDISTURBED. CLEAN, PATCH AND REPAIR SURFACE TO RECEIVE CONSTRUCTION.
107	EXISTING MECHANICAL CRAC UNITS TO BE REMOVED. REFER MECHANICAL FOR QUANTITY AND LOCATIONS.
108	REMOVE RAISED ACCESS FLOORING FRAMING AND TILES AS REQUIRED TO FACILITATE REMOVAL FOR MECHANICAL REFRIDGERANT PIPING, REFER MECHANICAL. SALVAGE AND REINSTALL RAISED ACCESS FLOORING ONCE CONSTRUCTION IS COMPLETE. ENSURE VISUAL INDICATORS ARE PROVIDED AT AREAS OF REMOVED RAISED ACCESS FLOORING TILES.
109	REMOVE EXISTING FINISH FLOOR TILE AND WALL TILE IN THEIR ENTIRETY AND PREPARE TO RECEIVE CONSTRUCTION. WALL MOUNTED TOILET ACCESSORIES TO REMAIN, SALVAGE AND REINSTALL AS REQUIRED. COORDINATE WITH WALL RELOCATION.

SHEET KEYNOTES

112	REMOVE ALL EXISTING POWER FILTERS IN AREA AS INDICATED FOR FUTURE CRAC UNIT INSTALLATION WITHOUT DAMAGING, REFER ELECTRICAL AND MECHANICAL. COORDINATE WITH CONTRACTING OFFICER FOR STORAGE AS REQUIRED.
114	DEMOLISH EXISTING WALL TO EXTENTS SHOWN, CLEAN AND PREPARE TO RECEIVE CONSTRUCTION.
116	REMOVE EXISTING TOILET AND ACCESSORIES IN ITS ENTIRETY. CLEAN, PATCH AND PREPARE FLOOR TO RECEIVE CONSTRUCTION.
118	REMOVE AND SALVAGE EXISTING URINAL AND ACCESSORIES IN ITS ENTIRETY. CLEAN, PATCH AND PREPARE WALL TO RECEIVE FINISHES AND URINAL REINSTALL.
121	SAWCUT EXISTING WALL TO EXTENT SHOWN, REMOVE DEBRIS, CLEAN AND PREPARE TO RECEIVE LOUVER. REFER STRUCTURAL AND MECHANICAL.
122	REMOVE EXISTING COUNTER, LAVATORY, AND MIRROR. PATCH AND REPAIR FLOOR AND WALL SURFACES TO PREPARE FOR CONSTRUCTION.
125	EXISTING CONCRETE BOLLARDS TO REMAIN UNDISTURBED
128	REMOVE EXISTING DOOR, FRAME, HARDWARE, AND ACCESSORIES IN THEIR ENTIRETY. PATCH AND REPAIR ADJACENT WALL TO BE FREE OF DEFECTS AND PREPARE TO RECEIVE CONSTRUCTION.
132	REMOVE EXISTING CONCRETE WALL TO RECEIVE NEW SCHEDULED DOOR, REFER STRUCTURAL.
145	REMOVE AND SALVAGE EXISTING LOCKER STORAGE, HARDWARE, AND ACCESSORIES IN ITS ENTIRETY FOR DOOR OPENING DEMOLITION; REFER A-401 FOR RELOCATION
259	REMOVE EXISTING CANOPY AND PATCH AND REPAIR CONCRETE WALL WHERE CANOPY EXISTED. PREPARE SURFACE TO RECEIVE CONSTRUCTION, REFER STRUCTURAL.
266	REMOVE EXISTING OVERHEAD COILING DOOR, FRAME, HARDWARE IN ITS ENTIRETY. CLEAN, PATCH, AND REPAIR ADJACENT WALL SURFACES AND PREPARE FOR OVERHEAD COILING DOOR INSTALLATION
283	REMOVE EXISTING MECHANICAL HOOD; INFILL, PATCH, AND REPAIR EXISTING WALL TO BE FREE OF DEBRIS AND PREPARE TO RECEIVE CONCRETE AND FINISHES, REFER STRUCTURAL AND MECHANCIAL.
409	EXISTING TELECOM EQUIPMENT, REFER TELECOM

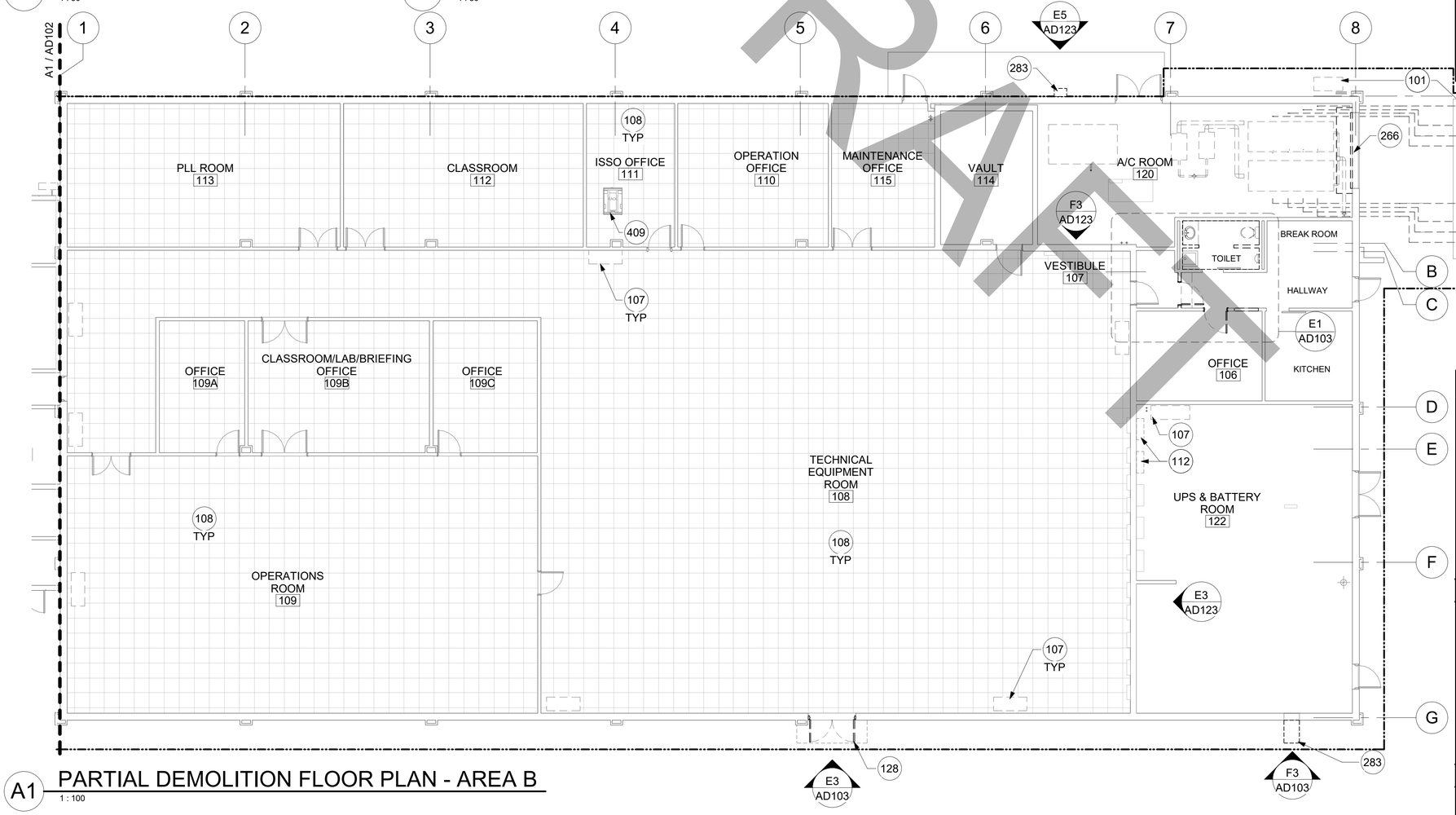

PARTIAL DEMOLITION FLOOR PLAN - AREA B

A1 1 : 100

DEMOLITION OVERALL PLANS LEGEND

- APPROXIMATE AREAS OF DEMOLITION
- EXISTING ITEMS TO BE REMOVED
- EXISTING TO REMAIN
- EXISTING CEILING TO BE REMOVED
- REMOVE EXISTING DOOR AND/OR DOOR FRAME SYSTEM WHERE INDICATED.
- NOT IN SCOPE

KEY PLAN

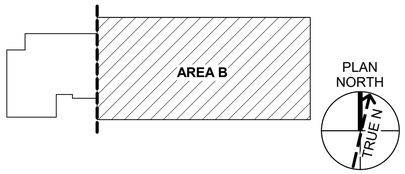

GRAPHIC SCALE(S)

0 500 1000 2000 — SCALE: 1:50

0 2000 4000 — SCALE: 1:100

草稿

US Army Corps of Engineers
Japan District ®

FOR REVIEW ONLY

THESE DOCUMENTS ARE FOR CONCEPT DESIGN AND NOT INTENDED FOR CONSTRUCTION, BIDDING OR PERMIT PURPOSES. THEY WERE PREPARED BY, OR UNDER SUPERVISION OF:

Christopher M. Surles
NAME

TX 23638 — REGISTRATION #
09/04/2025 — DATE

TEXAS REGISTERED ENGINEERING FIRM F-2966

MARK	DESCRIPTION	DATE

ISSUE DATE: 09/04/2025
SOLICITATION NO.:
CONTRACT NO.:
DRAWING CODE:

DESIGNED BY: C.SURLES
DRAWN BY: J.METZLER
CHECKED BY: K. CARLSON
SUBMITTED BY: A. GUERRA
SIZE: ISO A1
FILE NAME: AD103

US ARMY CORPS OF ENGINEERS
JAPAN ENGINEER DISTRICT
OKINAWA, JAPAN

Jacobs
JACOBS GOVERNMENT SERVICES COMPANY
777 MAIN STREET, FORT WORTH, TX 76102
USA

FY25 REPAIR HVAC WIDEBAND SATCOM OPS B100
CAMP BUCKNER COMMUNICATIONS ANNEX
OKINAWA, JAPAN
PROJECT NUMBER:D3449305

PARTIAL DEMOLITION FLOOR PLAN - AREA B

SHEET ID
AD103

AD AD103- AD

FILE PATH: C:_Revit_Local_Models\2022\D3449305-A-3D_Jake.Metzler.rvt
PLOT DATE: 8/29/2025 10:32:34 AM PLOTTED BY: PLOT SCALE: As indicated

BACKCHECK SUBMITTAL DESIGN

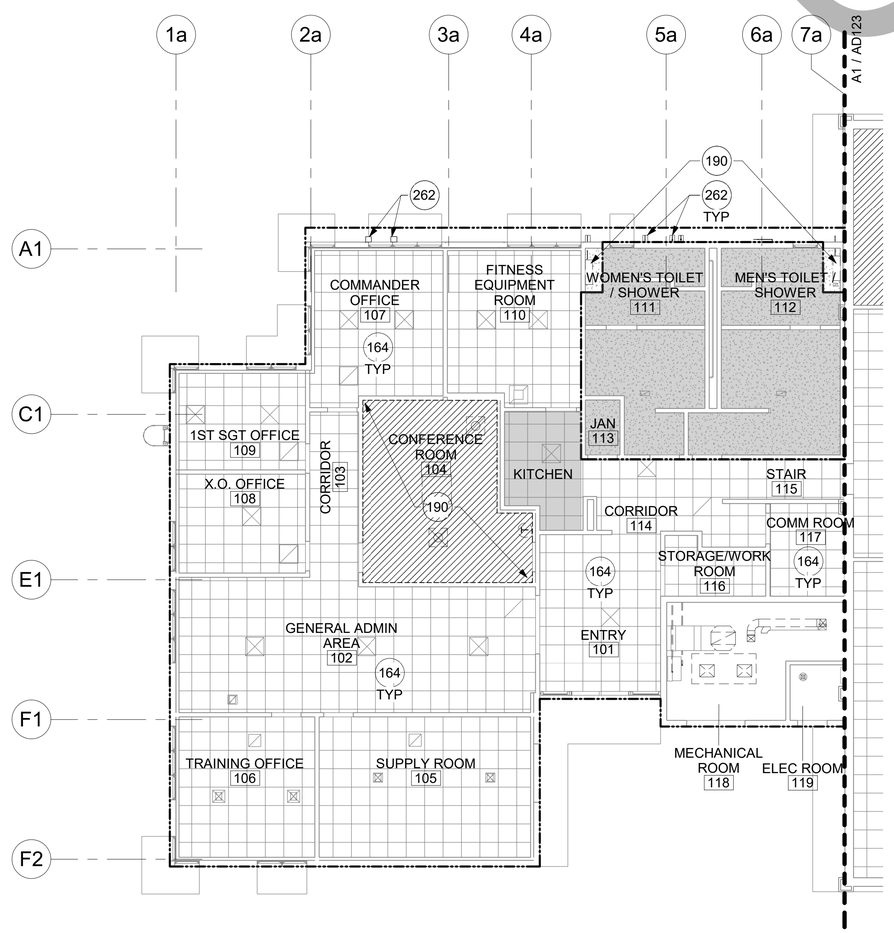

A1 PARTIAL DEMOLITION REFLECTED CEILING PLAN - AREA A

1 : 100

DRAFT

DEMOLITION OVERALL PLANS LEGEND

- APPROXIMATE AREAS OF DEMOLITION
- EXISTING ITEMS TO BE REMOVED
- EXISTING TO REMAIN
- EXISTING CEILING TO BE REMOVED
- REMOVE EXISTING DOOR AND/OR DOOR FRAME SYSTEM WHERE INDICATED.
- NOT IN SCOPE

GENERAL NOTES - DEMOLITION PLANS

A	EXISTING CONSTRUCTION SHOWN BASED UPON OWNER FURNISHED PLANS AND ONSITE OBSERVATION. FIELD VERIFY EXISTING CONDITIONS AND VERIFY CONSTRUCTION LAYOUT PRIOR TO COMMENCEMENT OF CONSTRUCTION. REPORT ANY DISCREPANCIES BETWEEN DRAWINGS AND ACTUAL FIELD CONDITIONS TO THE CONTRACTING OFFICER PRIOR TO PROCEEDING WITH WORK
B	COORDINATE THE PROJECT SCHEDULE OF WORK AND THE PROJECT SAFETY DEMARCATIONS WITH THE CONTRACTING OFFICER
C	COORDINATE WITH THE CONTRACTING OFFICER FOR DEMOLITION AND PHASING SCHEDULE PRIOR TO COMMENCEMENT OF DEMOLITION
D	PROTECT AND MAINTAIN EXISTING ROOF, WALLS, FLOORING, PLUMBING, ELECTRICAL, LIGHTING, AND FIRE PROTECTION THAT IS REQUIRED TO REMAIN IN SERVICE
E	REFER AND COORDINATE WITH CIVIL, STRUCTURAL, MECHANICAL, PLUMBING, FIRE PROTECTION, AND ELECTRICAL DRAWINGS FOR ADDITIONAL DEMOLITION SCOPE AND PHASING
F	IN THE AREAS DESIGNATED FOR CONSTRUCTION, REMOVE HARDWARE, HANGERS, ANCHOR SYSTEMS, MISC. METAL ATTACHMENTS, ETC. AS REQUIRED. PATCH AND FINISH TO MATCH ADJACENT SURFACE
G	REFER STRUCTURAL, MECHANICAL, PLUMBING, FIRE PROTECTION, AND ELECTRICAL DRAWINGS FOR LOCATIONS OF ADDITIONAL PENETRATIONS IF REQUIRED
H	PATCH AND REPAIR EXISTING WALLS, FLOORS, AND ROOF DAMAGED FROM THE REMOVAL OF ASSOCIATED ACCESSORIES TO BE FREE OF DEFECTS AND PREPARE TO RECEIVE NEW CONSTRUCTION IN THE AREA OF WORK
J	COORDINATE DISPOSAL OF DEMOLISHED MATERIALS WITH CONTRACTING OFFICER
K	REMOVE EXISTING FLOOR FINISHES, WALL BASES, CEILING SYSTEMS, UTILITIES AND UTILITY SUPPORTS AND OTHER MISCELLANEOUS CONSTRUCTION IN AFFECTED AREAS AS REQUIRED TO PROVIDE A CLEAN SPACE TO INITIATE NEW CONSTRUCTION
L	FIELD VERIFY EXISTING CONDITIONS, DIMENSIONS AND VERIFY CONSTRUCTION LAYOUT PRIOR TO COMMENCEMENT OF CONSTRUCTION
M	STOP WORK IMMEDIATELY AND NOTIFY THE CONTRACTING OFFICER IF ASBESTOS CONTAINING MATERIALS ARE DISCOVERED NOT IDENTIFIED IN THE ASBESTOS SURVEY
N	COORDINATE PAINTED SURFACES ASSUMED TO CONTAIN LEAD IN ACCORDANCE WITH THE OSHA LEAD IN CONSTRUCTION STANDARD 39 CFR 1926.62
P	REMOVE AND SALVAGE OR REPLACE EXISTING DOOR THRESHOLDS AS REQUIRED FOR NEW FLOORING FINISHES
Q	COORDINATE WITH THE CONTRACTING OFFICER FOR LOCATION OF TEMPORARY BARRIER PARTITION AS REQUIRED FOR RENOVATION WORK

SHEET KEYNOTES

164	REMOVE AND SALVAGE ACOUSTICAL CEILING TILE SYSTEM AS REQUIRED FOR MECHANICAL, ELECTRICAL AND FIRE PROTECTION SCOPE AND REPLACE IN KIND DAMAGED ACOUSTICAL CEILING TILES AS REQUIRED TO MATCH ADJACENT CEILING; REFER MECHANICAL, ELECTRICAL AND FIRE PROTECTION.
190	WALL MOUNT MINI-SPLIT, REFER MECHANICAL FOR REMOVAL. PATCH AND REPAIR EXISTING WALL SURFACE TO BE FREE OF DEFECTS, AND PREPARE TO RECEIVE CONSTRUCTION.
262	REMOVE EXISTING MECHANICAL HOODS AND EXTERIOR PIPING SLEEVES IN THEIR ENTIRETY. CAP AND REMAIN IN PLACE EXISTING REFRIDGERANT LINES IN WALL, REFER MECHANICAL. PATCH AND REPAIR EXISTING EXTERIOR WALL TO MATCH EXISTING, BE FREE OF DEFECTS, AND PREPARE TO RECEIVE CONSTRUCTION AND FINISHES.

KEY PLAN

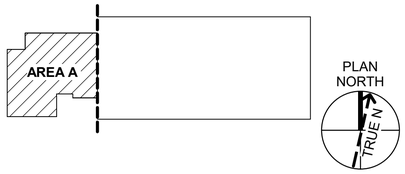

GRAPHIC SCALE(S)

0 2000 4000

SCALE: 1:100

US Army Corps of Engineers
Japan District ®

FOR REVIEW ONLY

THESE DOCUMENTS ARE FOR CONCEPT DESIGN AND NOT INTENDED FOR CONSTRUCTION, BIDDING OR PERMIT PURPOSES. THEY WERE PREPARED BY, OR UNDER SUPERVISION OF:

Christopher M. Surles
NAME

TX 23638 — REGISTRATION #
09/04/2025 — DATE

TEXAS REGISTERED ENGINEERING FIRM F-2966

MARK	DESCRIPTION	DATE

DESIGNED BY: C.SURLES
DRAWN BY: J.METZLER
CHECKED BY: K.CARLSON
SUBMITTED BY: A.GUERRA
SIZE: ISO A1
ISSUE DATE: 09/04/2025
SOLICITATION NO.:
CONTRACT NO.:
DRAWING CODE:
FILE NAME: AD122

US ARMY CORPS OF ENGINEERS
JAPAN ENGINEER DISTRICT
OKINAWA, JAPAN

Jacobs
JACOBS GOVERNMENT SERVICES COMPANY
777 AMA STREET, FORT WORTH, TX 76102
USA

FY25 REPAIR HVAC WIDEBAND SATCOM OPS B100
CAMP BUCKNER COMMUNICATIONS ANNEX
OKINAWA, JAPAN
PROJECT NUMBER:D3449305

PARTIAL DEMOLITION REFLECTED CEILING PLAN - AREA A

SHEET ID

AD122

AD AD122- AD

FILE PATH: C:_Revit_Local_Models\2022\D3449305-A-3D_Jake.Metzler.rvt
PLOT DATE: 8/29/2025 10:32:36 AM PLOTTED BY: PLOT SCALE: As indicated

BACKCHECK SUBMITTAL DESIGN

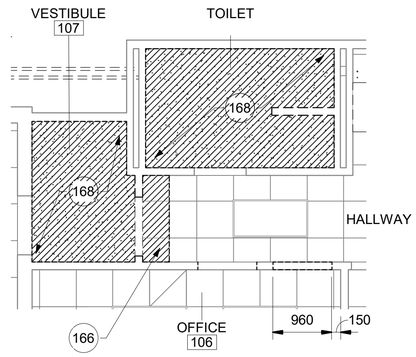

ENLARGED DEMOLITION RCP - VESTIBULE AND TOILET

E1 1 : 50

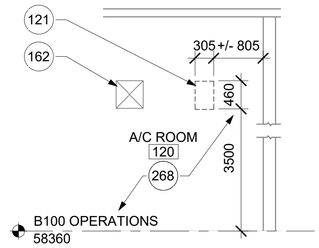

DEMOLITION ELEVATION

F3 1 : 50

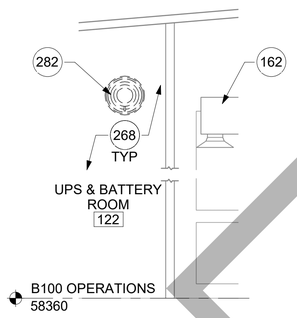

DEMOLITION EXHAUST FAN ELEVATION

E3 1 : 50

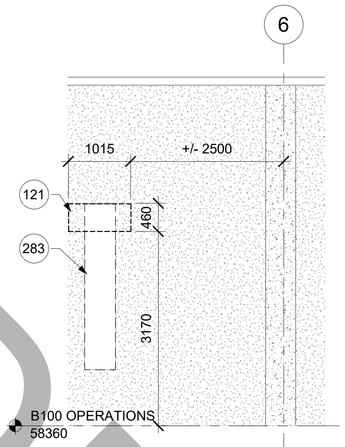

DEMOLITION LOUVER ELEVATION

E5 1 : 50

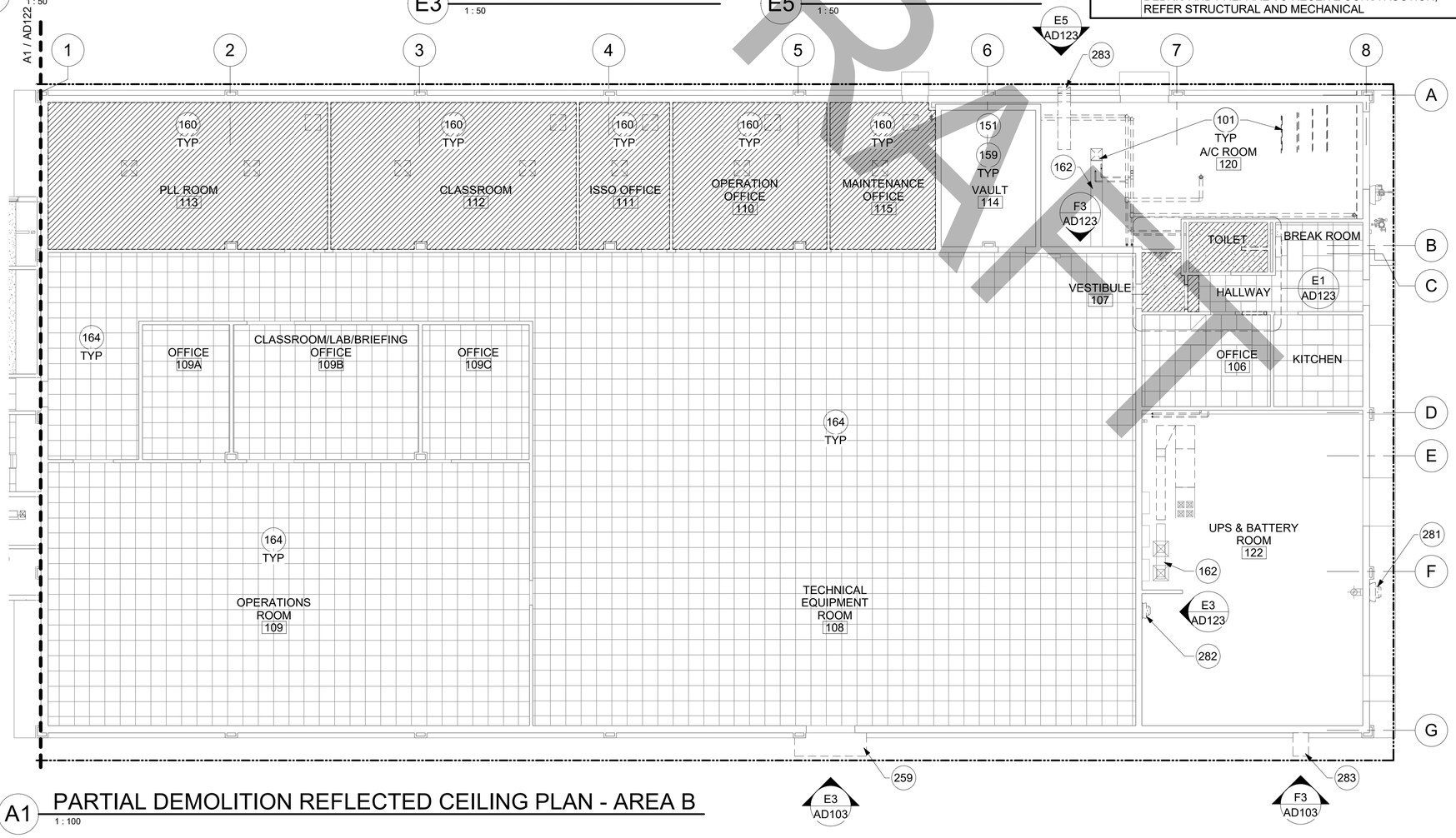

PARTIAL DEMOLITION REFLECTED CEILING PLAN - AREA B

A1 1 : 100

SHEET KEYNOTES

101	EXISTING MECHANICAL EQUIPMENT TO BE REMOVED. CLEAN, PATCH AND PREPARE EXISTING AFFECTED SURFACES FOR INSTALL. REFER MECHANICAL.
121	SAWCUT EXISTING WALL TO EXTENT SHOWN, REMOVE DEBRIS, CLEAN AND PREPARE TO RECEIVE LOUVER. REFER STRUCTURAL AND MECHANICAL.
151	EXISTING MECHANICAL EQUIPMENT ABOVE VAULT LID, REFER MECHANICAL.

SHEET KEYNOTES

159	REMOVE EXISTING ADHERED CEILING IN ITS ENTIRETY IN AREA AS INDICATED. COORDINATE REMOVAL OF MECHANICAL EQUIPMENT, LIGHTING FIXTURES, AND FIRE PROTECTION DEVICES WITH MECHANICAL, ELECTRICAL AND FIRE PROTECTION. CLEAN, PATCH AND PREPARE VAULT CONCRETE LID TO RECEIVE CONSTRUCTION AND FINISHES. EXISTING PENETRATIONS NOT REUSED TO BE INFILLED AS REQUIRED, REFER STRUCTURAL.
160	REMOVE EXISTING CEILING SYSTEM IN ITS ENTIRETY IN AREA AS INDICATED. COORDINATE REMOVAL OF MECHANICAL EQUIPMENT, ASSOCIATED AIR DEVICES, LIGHTING FIXTURES, AND FIRE PROTECTION DEVICES WITH MECHANICAL, ELECTRICAL AND FIRE PROTECTION.
162	EXISTING MECHANICAL DUCTWORK TO REMAIN, REFER MECHANICAL.
164	REMOVE AND SALVAGE ACOUSTICAL CEILING TILE SYSTEM AS REQUIRED FOR MECHANICAL, ELECTRICAL AND FIRE PROTECTION SCOPE AND REPLACE IN KIND DAMAGED ACOUSTICAL CEILING TILES AS REQUIRED TO MATCH ADJACENT CEILING; REFER MECHANICAL, ELECTRICAL AND FIRE PROTECTION.
166	REMOVE CEILING TO EXTENTS SHOWN. CLEAN, PATCH AND PREPARE WALLS FOR CONSTRUCTION.
168	REMOVE CEILING IN ITS ENTIRETY FOR CONSTRUCTION AND REPLACE WITH GYPSUM BOARD CEILING. REMOVE AND REUSE LIGHT FIXTURES AND CEILING DEVICES AS REQUIRED, REFER ELECTRICAL.
259	REMOVE EXISTING CANOPY AND PATCH AND REPAIR CONCRETE WALL WHERE CANOPY EXISTED. PREPARE SURFACE TO RECEIVE CONSTRUCTION, REFER STRUCTURAL.
268	EXISTING WALL/CEILING MOUNTED EQUIPMENT AND PIPING TO REMAIN UNDISTURBED UNLESS REQUIRED TO BE REMOVED FOR CONSTRUCTION. COORDINATE WITH CONTRACTING OFFICER FOR TEMPORARY REMOVAL AND REINSTALLATION.
281	REMOVE EXISTING MECHANICAL EXHAUST FAN; CLEAN, PATCH AND REPAIR EXISTING WALL TO BE FREE OF DEBRIS AND PREPARE TO RECEIVE CONSTRUCTION, REFER STRUCTURAL AND MECHANICAL

GENERAL NOTES - DEMOLITION PLANS

A	EXISTING CONSTRUCTION SHOWN BASED UPON OWNER FURNISHED PLANS AND ONSITE OBSERVATION. FIELD VERIFY EXISTING CONDITIONS AND VERIFY CONSTRUCTION LAYOUT PRIOR TO COMMENCEMENT OF CONSTRUCTION. REPORT ANY DISCREPANCIES BETWEEN DRAWINGS AND ACTUAL FIELD CONDITIONS TO THE CONTRACTING OFFICER PRIOR TO PROCEEDING WITH WORK
B	COORDINATE THE PROJECT SCHEDULE OF WORK AND THE PROJECT SAFETY DEMARCATIONS WITH THE CONTRACTING OFFICER
C	COORDINATE WITH THE CONTRACTING OFFICER FOR DEMOLITION AND PHASING SCHEDULE PRIOR TO COMMENCEMENT OF DEMOLITION
D	PROTECT AND MAINTAIN EXISTING ROOF, WALLS, FLOORING, PLUMBING, ELECTRICAL, LIGHTING, AND FIRE PROTECTION THAT IS REQUIRED TO REMAIN IN SERVICE
E	REFER AND COORDINATE WITH CIVIL, STRUCTURAL, MECHANICAL, PLUMBING, FIRE PROTECTION, AND ELECTRICAL DRAWINGS FOR ADDITIONAL DEMOLITION SCOPE AND PHASING
F	IN THE AREAS DESIGNATED FOR CONSTRUCTION, REMOVE HARDWARE, HANGERS, ANCHOR SYSTEMS, MISC. METAL ATTACHMENTS, ETC. AS REQUIRED. PATCH AND FINISH TO MATCH ADJACENT SURFACE
G	REFER STRUCTURAL, MECHANICAL, PLUMBING, FIRE PROTECTION, AND ELECTRICAL DRAWINGS FOR LOCATIONS OF ADDITIONAL PENETRATIONS IF REQUIRED
H	PATCH AND REPAIR EXISTING WALLS, FLOORS, AND ROOF DAMAGED FROM THE REMOVAL OF ASSOCIATED ACCESSORIES TO BE FREE OF DEFECTS AND PREPARE TO RECEIVE NEW CONSTRUCTION IN THE AREA OF WORK
J	COORDINATE DISPOSAL OF DEMOLISHED MATERIALS WITH CONTRACTING OFFICER
K	REMOVE EXISTING FLOOR FINISHES, WALL BASES, CEILING SYSTEMS, UTILITIES AND UTILITY SUPPORTS AND OTHER MISCELLANEOUS CONSTRUCTION IN AFFECTED AREAS AS REQUIRED TO PROVIDE A CLEAN SPACE TO INITIATE NEW CONSTRUCTION
L	FIELD VERIFY EXISTING CONDITIONS, DIMENSIONS AND VERIFY CONSTRUCTION LAYOUT PRIOR TO COMMENCEMENT OF CONSTRUCTION
M	STOP WORK IMMEDIATELY AND NOTIFY THE CONTRACTING OFFICER IF ASBESTOS CONTAINING MATERIALS ARE DISCOVERED NOT IDENTIFIED IN THE ASBESTOS SURVEY
N	COORDINATE PAINTED SURFACES ASSUMED TO CONTAIN LEAD IN ACCORDANCE WITH THE OSHA LEAD IN CONSTRUCTION STANDARD 39 CFR 1926.62
P	REMOVE AND SALVAGE OR REPLACE EXISTING DOOR THRESHOLDS AS REQUIRED FOR NEW FLOORING FINISHES
Q	COORDINATE WITH THE CONTRACTING OFFICER FOR LOCATION OF TEMPORARY BARRIER PARTITION AS REQUIRED FOR RENOVATION WORK

SHEET KEYNOTES

282	REMOVE EXISTING MECHANICAL EXHAUST FAN; CLEAN EXISTING WALL AND PENETRATION TO BE FREE OF DEBRIS AND PREPARE TO RECEIVE CONCRETE INFILL AND FINISHES, REFER STRUCTURAL AND MECHANICAL.
283	REMOVE EXISTING MECHANICAL HOOD; INFILL, PATCH, AND REPAIR EXISTING WALL TO BE FREE OF DEBRIS AND PREPARE TO RECEIVE CONCRETE AND FINISHES, REFER STRUCTURAL AND MECHANCIAL.

DEMOLITION OVERALL PLANS LEGEND

- APPROXIMATE AREAS OF DEMOLITION
- EXISTING ITEMS TO BE REMOVED
- EXISTING TO REMAIN
- EXISTING CEILING TO BE REMOVED
- REMOVE EXISTING DOOR AND/OR DOOR FRAME SYSTEM WHERE INDICATED.
- NOT IN SCOPE

KEY PLAN

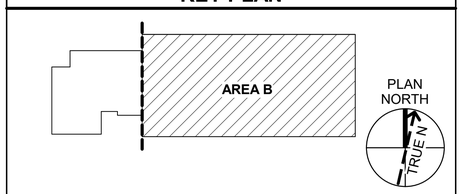

GRAPHIC SCALE(S)

0 500 1000 2000 — SCALE: 1:50

0 2000 4000 — SCALE: 1:100

US Army Corps of Engineers
Japan District ®

FOR REVIEW ONLY

THESE DOCUMENTS ARE FOR CONCEPT DESIGN AND NOT INTENDED FOR CONSTRUCTION, BIDDING OR PERMIT PURPOSES. THEY WERE PREPARED BY, OR UNDER SUPERVISION OF:

Christopher M. Surles
NAME

TX 23638 — REGISTRATION #
09/04/2025 — DATE

TEXAS REGISTERED ENGINEERING FIRM F-2966

MARK	DESCRIPTION	DATE

ISSUE DATE: 09/04/2025
SOLICITATION NO.:
CONTRACT NO.:
DRAWING CODE: AD

DESIGNED BY: C.SURLES
DRAWN BY: J.METZLER
CHECKED BY: K.CARLSON
SUBMITTED BY: A.GUERRA
SIZE: ISO A1
FILE NAME: AD123

US ARMY CORPS OF ENGINEERS
JAPAN ENGINEER DISTRICT
OKINAWA, JAPAN

Jacobs
JACOBS GOVERNMENT SERVICES COMPANY
777 MAIN STREET, FORT WORTH, TX 76102
USA

FY25 REPAIR HVAC WIDEBAND SATCOM OPS B100
CAMP BUCKNER COMMUNICATIONS ANNEX
OKINAWA, JAPAN
PROJECT NUMBER:D3449305

PARTIAL DEMOLITION REFLECTED CEILING PLAN - AREA B

SHEET ID
AD123

DRAFT

AD AD123- AD

FILE PATH: C:_Revit_Local_Models\2022\D3449305-A-3D_Jake.Metzler.rvt
PLOT DATE: 8/29/2025 10:32:39 AM PLOTTED BY: PLOT SCALE: As indicated

BACKCHECK SUBMITTAL DESIGN

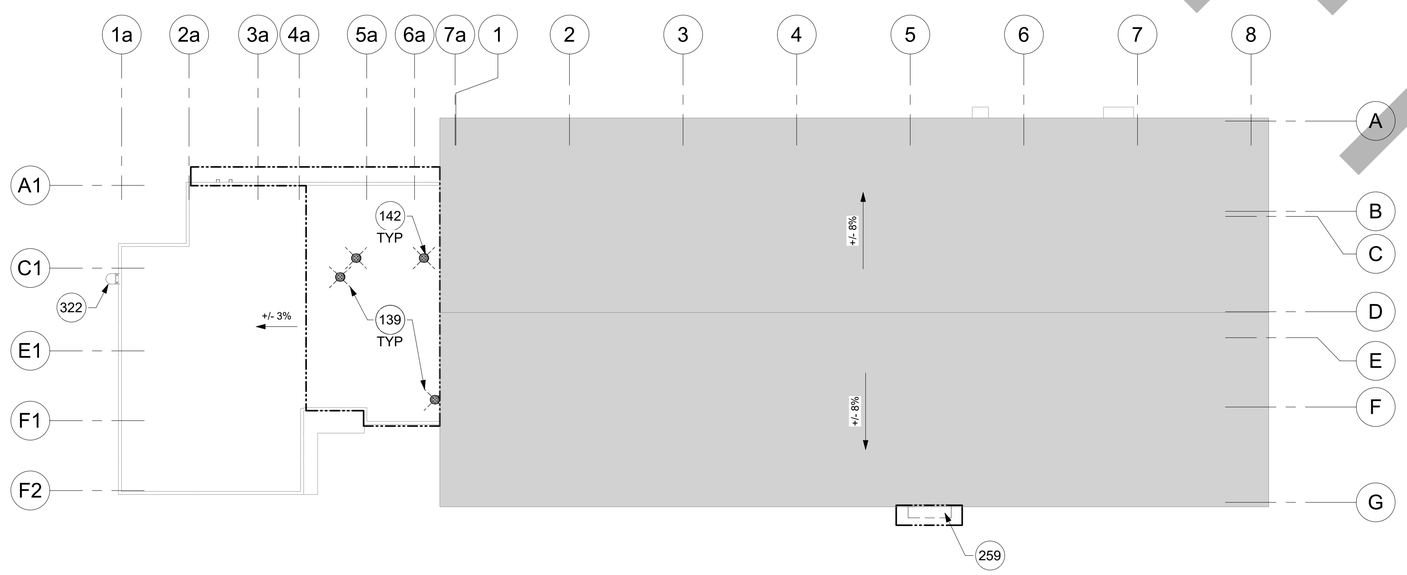

A1 DEMOLITION ROOF PLAN
1 : 200

DRAFT

GENERAL NOTES - DEMOLITION PLANS

A	EXISTING CONSTRUCTION SHOWN BASED UPON OWNER FURNISHED PLANS AND ONSITE OBSERVATION. FIELD VERIFY EXISTING CONDITIONS AND VERIFY CONSTRUCTION LAYOUT PRIOR TO COMMENCEMENT OF CONSTRUCTION. REPORT ANY DISCREPANCIES BETWEEN DRAWINGS AND ACTUAL FIELD CONDITIONS TO THE CONTRACTING OFFICER PRIOR TO PROCEEDING WITH WORK
B	COORDINATE THE PROJECT SCHEDULE OF WORK AND THE PROJECT SAFETY DEMARCATIONS WITH THE CONTRACTING OFFICER
C	COORDINATE WITH THE CONTRACTING OFFICER FOR DEMOLITION AND PHASING SCHEDULE PRIOR TO COMMENCEMENT OF DEMOLITION
D	PROTECT AND MAINTAIN EXISTING ROOF, WALLS, FLOORING, PLUMBING, ELECTRICAL, LIGHTING, AND FIRE PROTECTION THAT IS REQUIRED TO REMAIN IN SERVICE
E	REFER AND COORDINATE WITH CIVIL, STRUCTURAL, MECHANICAL, PLUMBING, FIRE PROTECTION, AND ELECTRICAL DRAWINGS FOR ADDITIONAL DEMOLITION SCOPE AND PHASING
F	IN THE AREAS DESIGNATED FOR CONSTRUCTION, REMOVE HARDWARE, HANGERS, ANCHOR SYSTEMS, MISC. METAL ATTACHMENTS, ETC. AS REQUIRED. PATCH AND FINISH TO MATCH ADJACENT SURFACE
G	REFER STRUCTURAL, MECHANICAL, PLUMBING, FIRE PROTECTION, AND ELECTRICAL DRAWINGS FOR LOCATIONS OF ADDITIONAL PENETRATIONS IF REQUIRED
H	PATCH AND REPAIR EXISTING WALLS, FLOORS, AND ROOF DAMAGED FROM THE REMOVAL OF ASSOCIATED ACCESSORIES TO BE FREE OF DEFECTS AND PREPARE TO RECEIVE NEW CONSTRUCTION IN THE AREA OF WORK
J	COORDINATE DISPOSAL OF DEMOLISHED MATERIALS WITH CONTRACTING OFFICER
K	REMOVE EXISTING FLOOR FINISHES, WALL BASES, CEILING SYSTEMS, UTILITIES AND UTILITY SUPPORTS AND OTHER MISCELLANEOUS CONSTRUCTION IN AFFECTED AREAS AS REQUIRED TO PROVIDE A CLEAN SPACE TO INITIATE NEW CONSTRUCTION
L	FIELD VERIFY EXISTING CONDITIONS, DIMENSIONS AND VERIFY CONSTRUCTION LAYOUT PRIOR TO COMMENCEMENT OF CONSTRUCTION
M	STOP WORK IMMEDIATELY AND NOTIFY THE CONTRACTING OFFICER IF ASBESTOS CONTAINING MATERIALS ARE DISCOVERED NOT IDENTIFIED IN THE ASBESTOS SURVEY
N	COORDINATE PAINTED SURFACES ASSUMED TO CONTAIN LEAD IN ACCORDANCE WITH THE OSHA LEAD IN CONSTRUCTION STANDARD 39 CFR 1926.62
P	REMOVE AND SALVAGE OR REPLACE EXISTING DOOR THRESHOLDS AS REQUIRED FOR NEW FLOORING FINISHES
Q	COORDINATE WITH THE CONTRACTING OFFICER FOR LOCATION OF TEMPORARY BARRIER PARTITION AS REQUIRED FOR RENOVATION WORK

SHEET KEYNOTES

139	REMOVE EXISTING ROOF EXHAUST TIE-DOWNS AT ROOF MOUNTED EQUIPMENT. ROOF ATTACHMENT TO REMAIN UNDISTURBED. COORDINATE WITH MECHANICAL FOR ROOF EXHAUST FAN REMOVAL AND REINSTALL.
142	REMOVE EXISTING ROOF EXHAUST FANS, REFER MECHANICAL. PATCH AND REPAIR ROOF TO BE FREE OF DEFECTS AND PREPARE TO RECEIVE CONSTRUCTION.
259	REMOVE EXISTING CANOPY AND PATCH AND REPAIR CONCRETE WALL WHERE CANOPY EXISTED. PREPARE SURFACE TO RECEIVE CONSTRUCTION, REFER STRUCTURAL.
322	EXISTING ROOF LADDER AND CAGE TO REMAIN.

DEMOLITION ROOF PLAN LEGEND

- APPROXIMATE AREAS OF DEMOLITION
- EXISTING ITEMS TO BE REMOVED
- EXISTING TO REMAIN
- NOT IN SCOPE

KEY PLAN

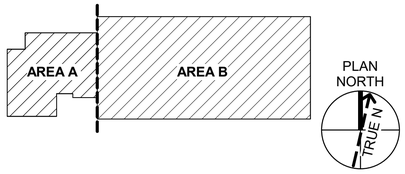

GRAPHIC SCALE(S)

0 4000 8000
SCALE: 1:200

US Army Corps of Engineers
Japan District ®

FOR REVIEW ONLY

THESE DOCUMENTS ARE FOR CONCEPT DESIGN AND NOT INTENDED FOR CONSTRUCTION, BIDDING OR PERMIT PURPOSES. THEY WERE PREPARED BY, OR UNDER SUPERVISION OF:

Christopher M. Surles
NAME
TX 23638 — REGISTRATION #
09/04/2025 — DATE
TEXAS REGISTERED ENGINEERING FIRM F-2966

MARK	DESCRIPTION	DATE

DESIGNED BY: C.SURLES	ISSUE DATE: 09/04/2025
DRAWN BY: J.METZLER	SOLICITATION NO.:
CHECKED BY: K.CARLSON	CONTRACT NO.:
SUBMITTED BY: A.GUERRA	DRAWING CODE:
SIZE: ISO A1	FILE NAME: AD131

US ARMY CORPS OF ENGINEERS
JAPAN ENGINEER DISTRICT
OKINAWA, JAPAN

Jacobs
JACOBS GOVERNMENT SERVICES COMPANY
777 AMA STREET, FORT HUACHUCA, AZ 85613
USA

AEC DRAWING

FY25 REPAIR HVAC WIDEBAND SATCOM OPS B100
CAMP BUCKNER COMMUNICATIONS ANNEX
OKINAWA, JAPAN
PROJECT NUMBER:D3449305

DEMOLITION ROOF PLAN

SHEET ID
AD131

AD AD131- AD

FILE PATH: C:_Revit_Local_Models\2022\D3449305-A-3D_Jake.Metzler.rvt
PLOT DATE: 8/29/2025 10:32:41 AM PLOTTED BY: PLOT SCALE: As indicated

BACKCHECK SUBMITTAL DESIGN

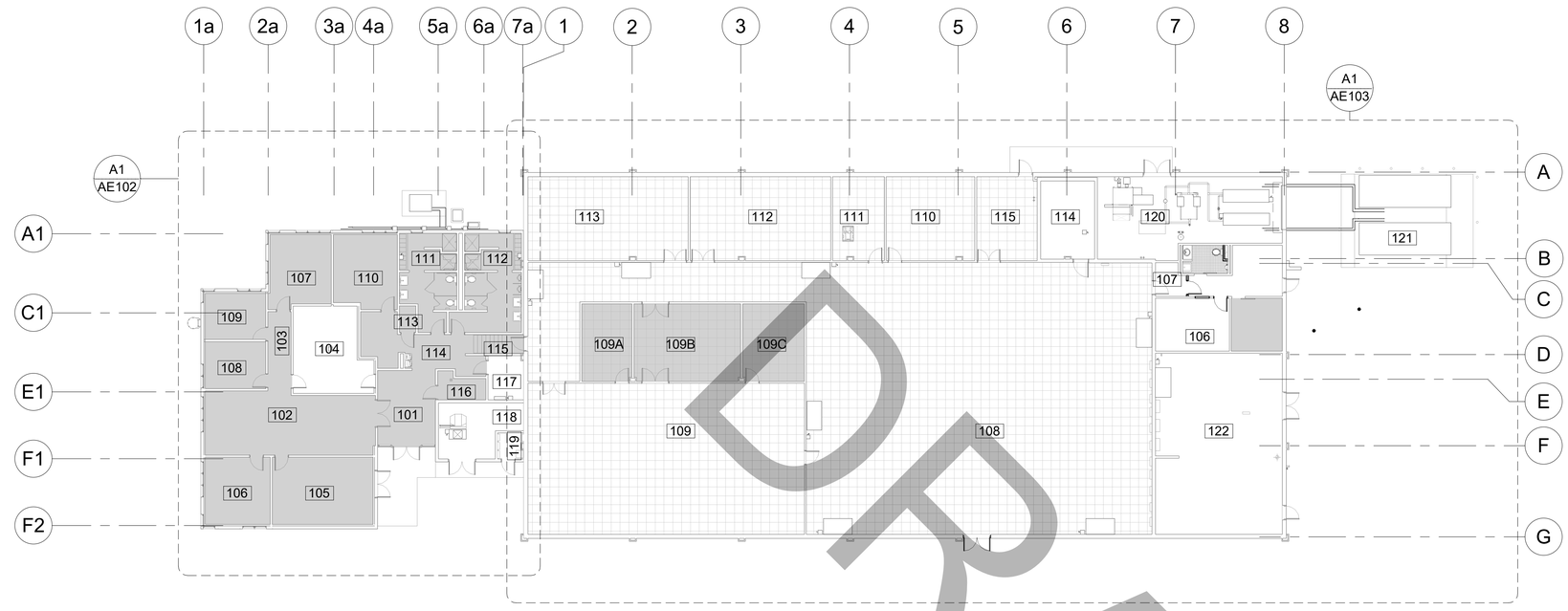

D1 OVERALL FLOOR PLAN

1 : 200

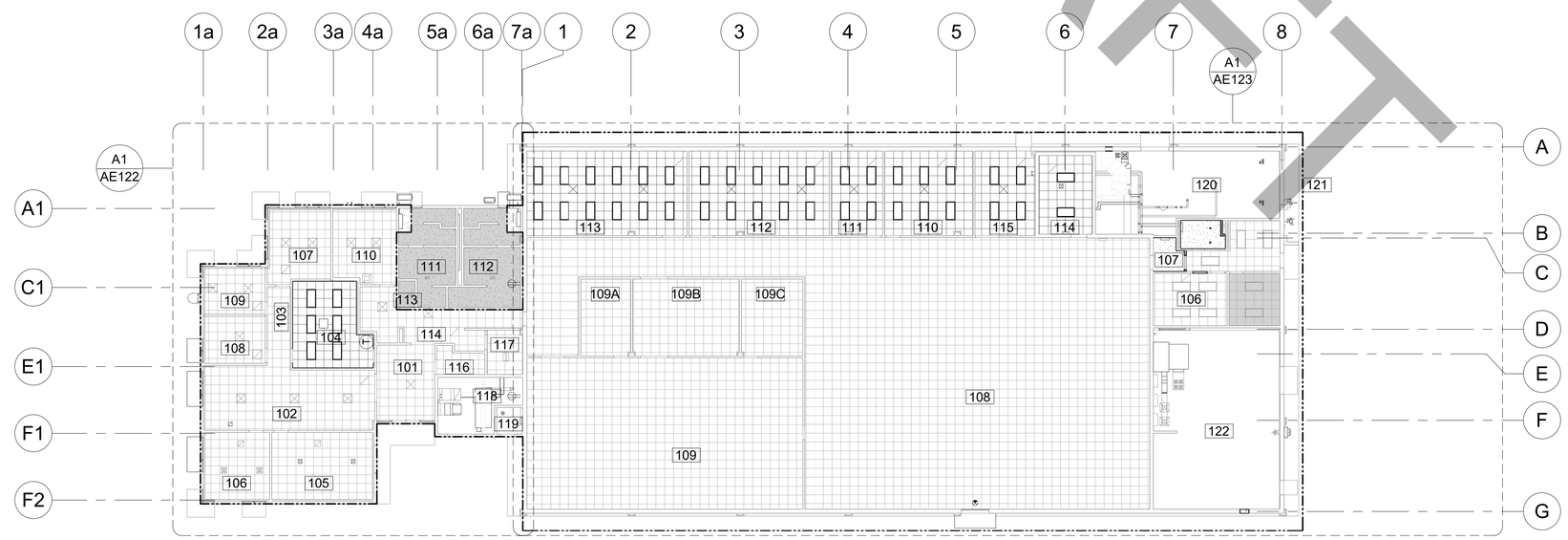

A1 OVERALL REFLECTED CEILING PLAN

1 : 200

DRAFT

GENERAL NOTES - OVERALL PLAN

A	REFER TO SHEETS AE102 THRU AE123 FOR PARTIAL PLANS
B	REFER TO SHEET A-601 FOR PARTITION TYPES, DOOR AND FRAME SCHEDULE
C	COORDINATE PHASING SCHEDULE WITH CONTRACTING OFFICER
D	COORDINATE LAYOUTS OF ALL WALL MOUNTED EQUIPMENT AND PROVIDE BACKING AND WALL SUPPORT AS REQUIRED PER MANUFACTURERS RECOMMENDATIONS
E	REPLACE EXISTING WALL BASE WHERE IMPACTED BY CONSTRUCTION ACTIVITIES INCLUDED BUT NOT LIMITED TO DEMOLITION OF FLOOR FINISHES, REPAINTING, AND NEW CONSTRUCTION. MATCH EXISTING ADJACENT WALL BASE FOR MATERIAL, FINISH, AND COLOR
F	PROVIDE FLOORING TRANSITIONS AT INTERSECTIONS OF EXISTING FLOORING AT NEW FLOORING AND DOORS
G	DIMENSIONS AND ANNOTATIONS OF EXISTING AREAS PROVIDED FOR CLARITY, VERIFY ALL DIMENSIONS AS INDICATED PRIOR TO COMMENCEMENT OF WORK
H	REINSTALL RAISED ACCESS FLOORING TILES SALVAGED AND STORED DURING DEMOLITION. REFER MECHANICAL FOR PLACEMENT OF APPROXIMATELY THIRTY ADDITIONAL PERFORATED RAISED ACCESS FLOORING TILES

GENERAL NOTES - REFLECTED CEILING PLANS

A	REFER TO AE122 AND AE123 FOR PARTIAL REFLECTED CEILING PLANS.
B	PROVIDE MOISTURE RESISTANT GYPSUM BOARD IN TOILET ROOM.
C	REPLACE ACOUSTICAL CEILING TILES REMOVED DURING DEMOLITION AT ALL MECHANICAL WORK LOCATIONS AS REQUIRED. REFER MECHANICAL FOR MORE INFORMATION
D	GYPSUM BOARD AND ACOUSTICAL CEILINGS TO BE 2400mm ABOVE FINISH FLOOR UNLESS OTHERWISE NOTED.
E	ADHERE GYPSUM BOARD CEILING TILES TO VAULT ROOM 114 EXISTING CONCRETE LID SURFACE AS REQUIRED TO MATCH EXISTING DESIGN FINISH.

PLAN LEGEND

- APPROXIMATE AREAS OF CONSTRUCTION
- NOT IN SCOPE

REFLECTED CEILING PLAN LEGEND

- GYPSUM BOARD CEILING AS SCHEDULED CONTROL JOINT
- 600x600mm ACOUSTICAL CEILING TILE AS SCHEDULED CENTERED IN SPACE AS INDICATED
- SPRINKLERS, SMOKE DETECTORS, AND SPEAKER STROBES; REFER TO FIRE PROTECTION DRAWINGS.
- LIGHT FIXTURE; REFER TO ELECTRICAL DRAWINGS.
- EXIT LIGHT FIXTURE; REFER TO ELECTRICAL DRAWINGS.
- RETURN AIR GRILLE; REFER TO MECHANICAL DRAWINGS.
- SUPPLY AIR DIFFUSERS; REFER TO MECHANICAL DRAWINGS.

KEY PLAN

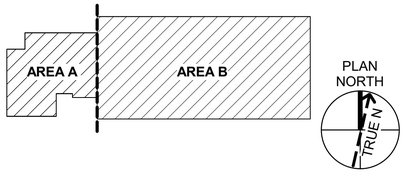

GRAPHIC SCALE(S)

0 4000 8000

SCALE: 1:200

US Army Corps of Engineers
Japan District ®

FOR REVIEW ONLY

THESE DOCUMENTS ARE FOR CONCEPT DESIGN AND NOT INTENDED FOR CONSTRUCTION, BIDDING OR PERMIT PURPOSES. THEY WERE PREPARED BY, OR UNDER SUPERVISION OF:

Christopher M. Surles
NAME

TX 23638 — REGISTRATION #
09/04/2025 — DATE

TEXAS REGISTERED ENGINEERING FIRM F-2966

MARK	DESCRIPTION	DATE

ISSUE DATE: 09/04/2025
SOLICITATION NO.:
CONTRACT NO.:
DRAWING CODE:

DESIGNED BY: C.SURLES
DRAWN BY: J. METZLER
CHECKED BY: K. CARLSON
SUBMITTED BY: A. GUERRA
SIZE: ISO A1
FILE NAME: AE101

US ARMY CORPS OF ENGINEERS
JAPAN ENGINEER DISTRICT
OKINAWA, JAPAN

Jacobs
JACOBS GOVERNMENT SERVICES COMPANY
777 MAIN STREET, FORT WORTH, TX 76102
USA

FY25 REPAIR HVAC WIDEBAND SATCOM OPS B100
CAMP BUCKNER COMMUNICATIONS ANNEX
OKINAWA, JAPAN
PROJECT NUMBER:D3449305

OVERALL PLANS

SHEET ID

AE101

AE AE101- XXX

FILE PATH: C:_Revit_Local_Models\2022\D3449305-A-3D_Jake.Metzler.rvt
PLOT DATE: 8/29/2025 10:32:46 AM PLOTTED BY: PLOT SCALE: As indicated

BACKCHECK SUBMITTAL DESIGN

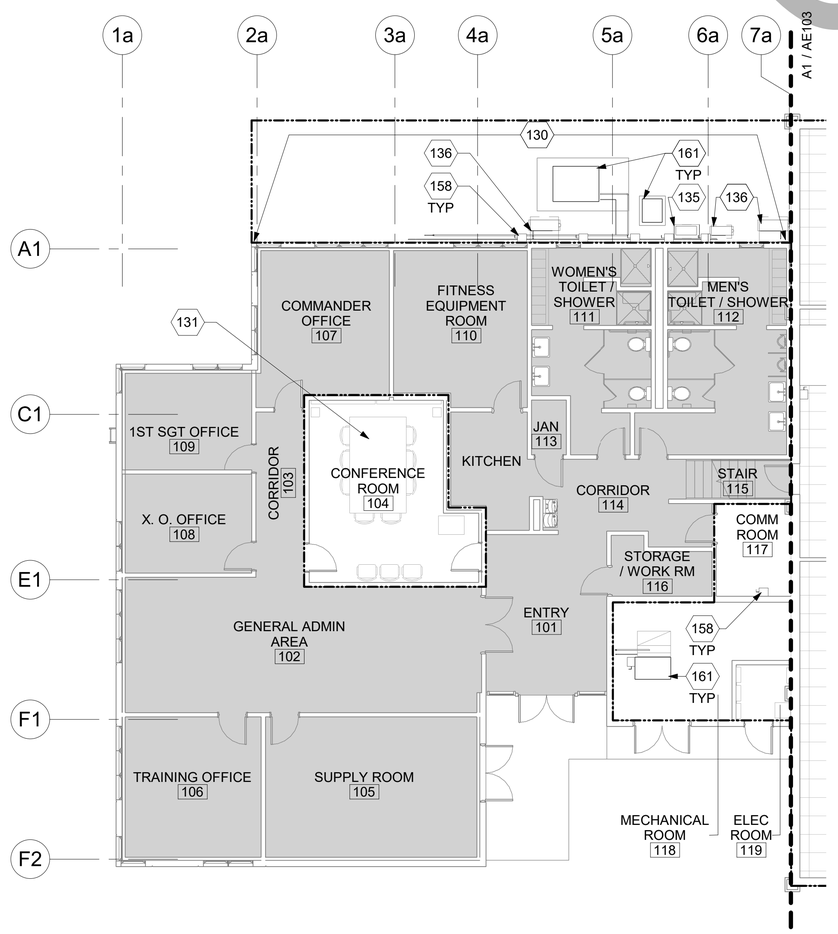

A1 PARTIAL FLOOR PLAN - AREA A

1 : 100

DRAFT

GENERAL NOTES - PARTIAL PLANS

A	REFER TO A-601 FOR PARTITION TYPES, DOOR AND FRAME TYPES.
B	REFER ELECTRICAL DRAWINGS FOR REQUIRED FLOOR CLEARANCES OF PANELS, TRANSFORMERS, GEAR, SWITCHES IN ELECTRICAL ROOMS; ELECTRICAL EQUIPMENT DESCRIPTIONS ARE PROVIDED IN ELECTRICAL DRAWINGS.
C	REFER SHEET A-001 FOR TYPICAL DOOR LOCATION PLACEMENT.
D	DIMENSIONS PROVIDED FOR CLARITY, VERIFY ALL DIMENSIONS AS INDICATED PRIOR TO COMMENCEMENT OF WORK.

SHEET KEYNOTES

130	PATCH AND REPAIR EXISTING WALL AT LOCATIONS OF REMOVED EQUIPMENT TO PREPARE FOR PAINT. CLEAN AND PREPARE WALL AT EXTENTS SHOWN IN ITS ENTIRETY AS INDICATED TO RECEIVE PAINT FINISH, EX-1.
131	REINSTALL EXISTING SALVAGED FURNITURE AS FURNISHED.
135	PROVIDE HOUSEKEEPING PAD FOR MECHANICAL UNIT, REFER STRUCTURAL AND MECHANICAL.
136	EXISTING WALL MOUNTED BRACKETS TO BE RE-USED FOR MECHANICAL UNITS, REFER MECHANICAL AND MANUFACTURER FOR MOUNTING REQUIREMENTS.
158	ELECTRICAL EQUIPMENT, REFER ELECTRICAL.
161	MECHANICAL EQUIPMENT, REFER MECHANICAL.

PLAN LEGEND

APPROXIMATE AREAS OF CONSTRUCTION

NOT IN SCOPE

KEY PLAN

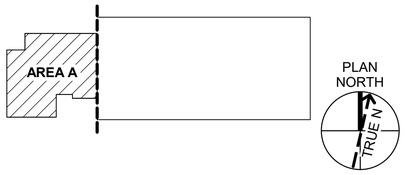

GRAPHIC SCALE(S)

0 2000 4000

SCALE: 1:100

US Army Corps of Engineers
Japan District ®

FOR REVIEW ONLY

THESE DOCUMENTS ARE FOR CONCEPT DESIGN AND NOT INTENDED FOR CONSTRUCTION, BIDDING OR PERMIT PURPOSES. THEY WERE PREPARED BY, OR UNDER SUPERVISION OF:

Christopher M. Surles
NAME

TX 23638 — REGISTRATION #
09/04/2025 — DATE

TEXAS REGISTERED ENGINEERING FIRM F-2966

MARK	DESCRIPTION	DATE

DESIGNED BY: C.SURLES
DRAWN BY: J. METZLER
CHECKED BY: K. CARLSON
SUBMITTED BY: A. GUERRA
SIZE: ISO A1
ISSUE DATE: 09/04/2025
SOLICITATION NO.:
CONTRACT NO.:
DRAWING CODE:
FILE NAME: AE102

US ARMY CORPS OF ENGINEERS
JAPAN ENGINEER DISTRICT
OKINAWA, JAPAN

Jacobs
JACOBS GOVERNMENT SERVICES COMPANY
777 MAIN STREET, FORT WORTH, TX 76102
USA

FY25 REPAIR HVAC WIDEBAND SATCOM OPS B100
CAMP BUCKNER COMMUNICATIONS ANNEX
OKINAWA, JAPAN
PROJECT NUMBER:D3449305

PARTIAL FLOOR PLAN - AREA A

SHEET ID

AE102

FILE PATH: C:_Revit_Local_Models\2022\D3449305-A-3D_Jake.Metzler.rvt
PLOT DATE: 8/29/2025 10:32:49 AM PLOTTED BY: PLOT SCALE: As indicated

BACKCHECK SUBMITTAL DESIGN

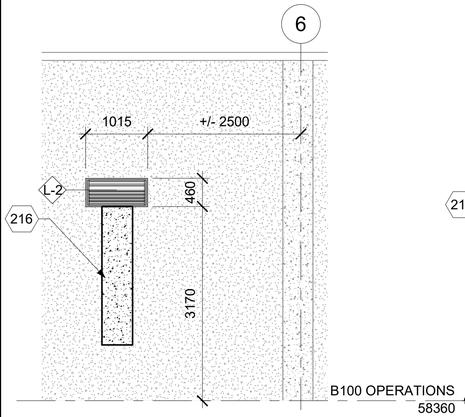

F1 LOUVER ELEVATION
1 : 50

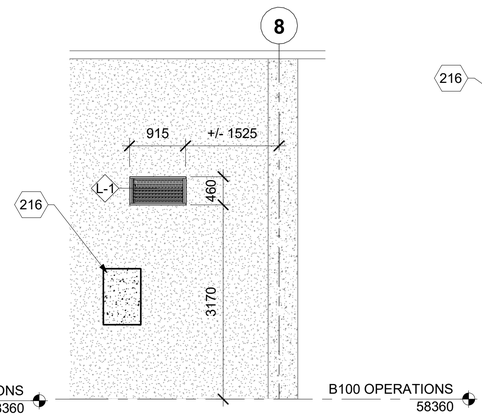

F3 LOUVER ELEVATION
1 : 50

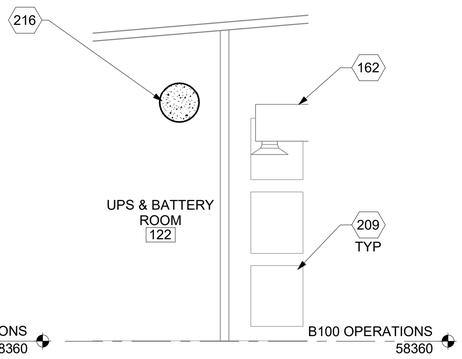

F5 INFILL ELEVATION
1 : 50

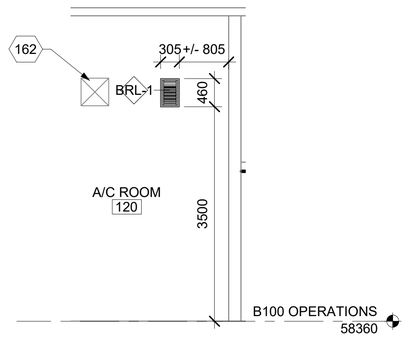

F7 LOUVER ELEVATION
1 : 50

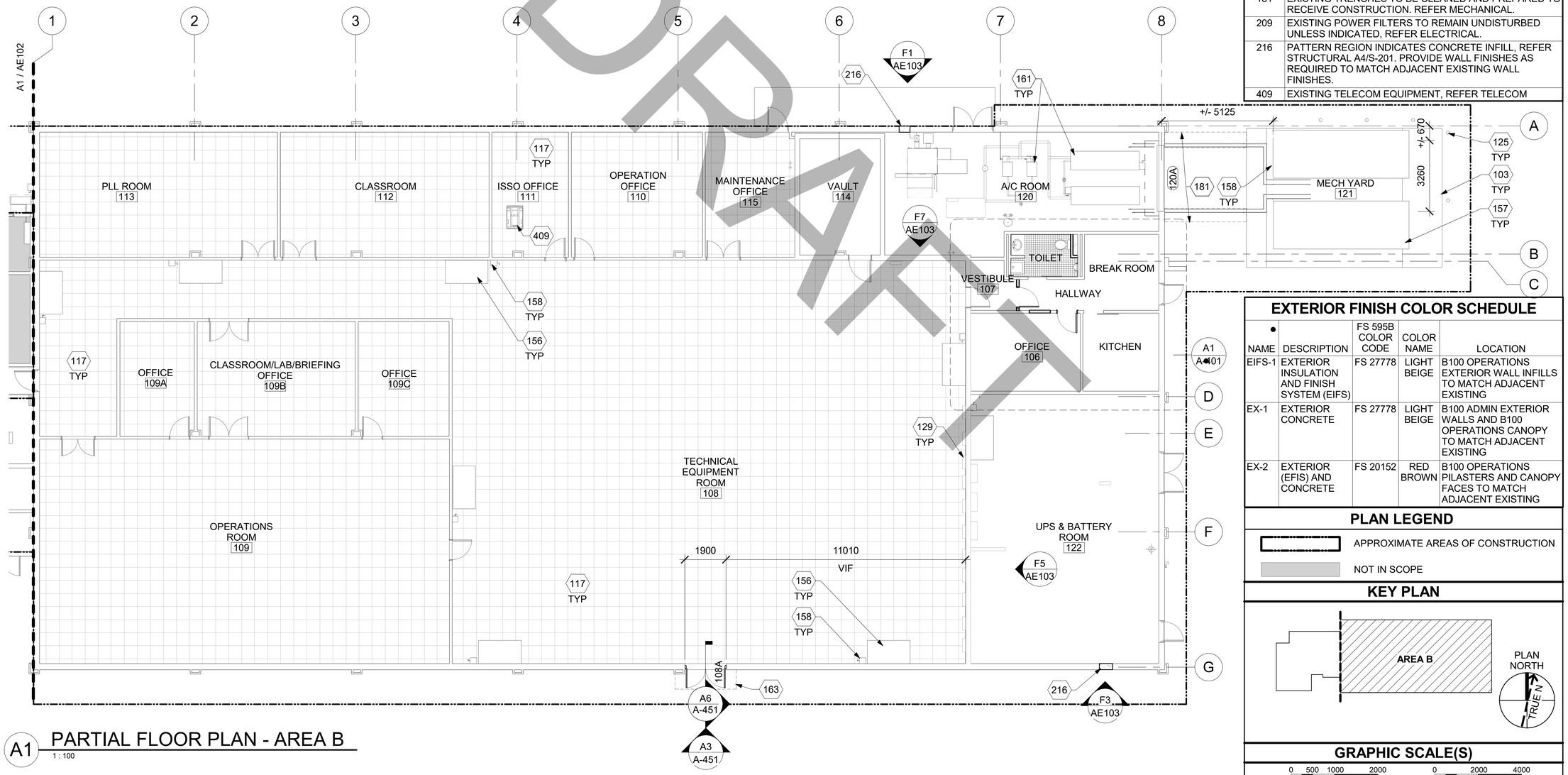

A1 PARTIAL FLOOR PLAN - AREA B
1 : 100

GENERAL NOTES - PARTIAL PLANS

A	REFER TO A-601 FOR PARTITION TYPES, DOOR AND FRAME TYPES.
B	REFER ELECTRICAL DRAWINGS FOR REQUIRED FLOOR CLEARANCES OF PANELS, TRANSFORMERS, GEAR, SWITCHES IN ELECTRICAL ROOMS; ELECTRICAL EQUIPMENT DESCRIPTIONS ARE PROVIDED IN ELECTRICAL DRAWINGS.
C	REFER SHEET A-001 FOR TYPICAL DOOR LOCATION PLACEMENT.
D	DIMENSIONS PROVIDED FOR CLARITY, VERIFY ALL DIMENSIONS AS INDICATED PRIOR TO COMMENCEMENT OF WORK.

SHEET KEYNOTES

103	EXISTING CONCRETE SLAB AT MECHANICAL CHILLERS TO REMAIN UNDISTURBED. CLEAN, PATCH AND REPAIR SURFACE TO RECEIVE CONSTRUCTION.
117	MECHANICAL CHILLED WATER PIPING BELOW RAISED ACCESS FLOORING, REFER M-103. REINSTALL RAISED ACCESS FLOORING TILES AND FRAMING AS REQUIRED.
125	EXISTING CONCRETE BOLLARDS TO REMAIN UNDISTURBED
129	EXISTING ELECTRICAL EQUIPMENT TO REMAIN UNDISTURBED, REFER ELECTRICAL.
156	MECHANICAL CRAC UNIT; REFER MECHANICAL.
157	MECHANICAL CHILLER AND PIPING, REFER MECHANICAL.
158	ELECTRICAL EQUIPMENT, REFER ELECTRICAL.
161	MECHANICAL EQUIPMENT, REFER MECHANICAL.
162	EXISTING MECHANICAL DUCTWORK TO REMAIN, REFER MECHANICAL.
163	DASH LINE REPRESENTS CANOPY EXTENTS ABOVE.
181	EXISTING TRENCHES TO BE CLEANED AND PREPARED TO RECEIVE CONSTRUCTION. REFER MECHANICAL.
209	EXISTING POWER FILTERS TO REMAIN UNDISTURBED UNLESS INDICATED, REFER ELECTRICAL.
216	PATTERN REGION INDICATES CONCRETE INFILL, REFER STRUCTURAL A4/S-201. PROVIDE WALL FINISHES AS REQUIRED TO MATCH ADJACENT EXISTING WALL FINISHES.
409	EXISTING TELECOM EQUIPMENT, REFER TELECOM

EXTERIOR FINISH COLOR SCHEDULE

NAME	DESCRIPTION	FS 595B COLOR CODE	COLOR NAME	LOCATION
EIFS-1	EXTERIOR INSULATION AND FINISH SYSTEM (EIFS)	FS 27778	LIGHT BEIGE	B100 OPERATIONS EXTERIOR WALL INFILLS TO MATCH ADJACENT EXISTING
EX-1	EXTERIOR CONCRETE	FS 27778	LIGHT BEIGE	B100 ADMIN EXTERIOR WALLS AND B100 OPERATIONS CANOPY TO MATCH ADJACENT EXISTING
EX-2	EXTERIOR (EFIS) AND CONCRETE	FS 20152	RED BROWN	B100 OPERATIONS PILASTERS AND CANOPY FACES TO MATCH ADJACENT EXISTING

PLAN LEGEND

APPROXIMATE AREAS OF CONSTRUCTION

NOT IN SCOPE

KEY PLAN

GRAPHIC SCALE(S)

0 500 1000 2000
SCALE: 1:50

0 2000 4000
SCALE: 1:100

US Army Corps of Engineers
Japan District ®

FOR REVIEW ONLY

THESE DOCUMENTS ARE FOR CONCEPT DESIGN AND NOT INTENDED FOR CONSTRUCTION, BIDDING OR PERMIT PURPOSES. THEY WERE PREPARED BY, OR UNDER SUPERVISION OF:

Christopher M. Surles
NAME
TX 23638 — REGISTRATION #
09/04/2025 — DATE
TEXAS REGISTERED ENGINEERING FIRM F-2966

MARK	DESCRIPTION	DATE

ISSUE DATE: 09/04/2025
SOLICITATION NO.:
CONTRACT NO.:
DRAWING CODE:

DESIGNED BY: C.SURLES
DRAWN BY: J. METZLER
CHECKED BY: K. CARLSON
SUBMITTED BY: A. GUERRA
SIZE: ISO A1
FILE NAME: AE103

US ARMY CORPS OF ENGINEERS
JAPAN ENGINEER DISTRICT
OKINAWA, JAPAN

Jacobs
JACOBS GOVERNMENT SERVICES COMPANY
777 MAIN STREET, FORT WORTH, TX 76102
USA

FY25 REPAIR HVAC WIDEBAND SATCOM OPS B100
CAMP BUCKNER COMMUNICATIONS ANNEX
OKINAWA, JAPAN
PROJECT NUMBER:D3449305

PARTIAL FLOOR PLAN - AREA B

SHEET ID
AE103

DRAFT

FILE PATH: C:_Revit_Local_Models\2022\D3449305-A-3D_Jake.Metzler.rvt
PLOT DATE: 8/29/2025 10:32:53 AM PLOTTED BY: PLOT SCALE: As indicated

BACKCHECK SUBMITTAL DESIGN

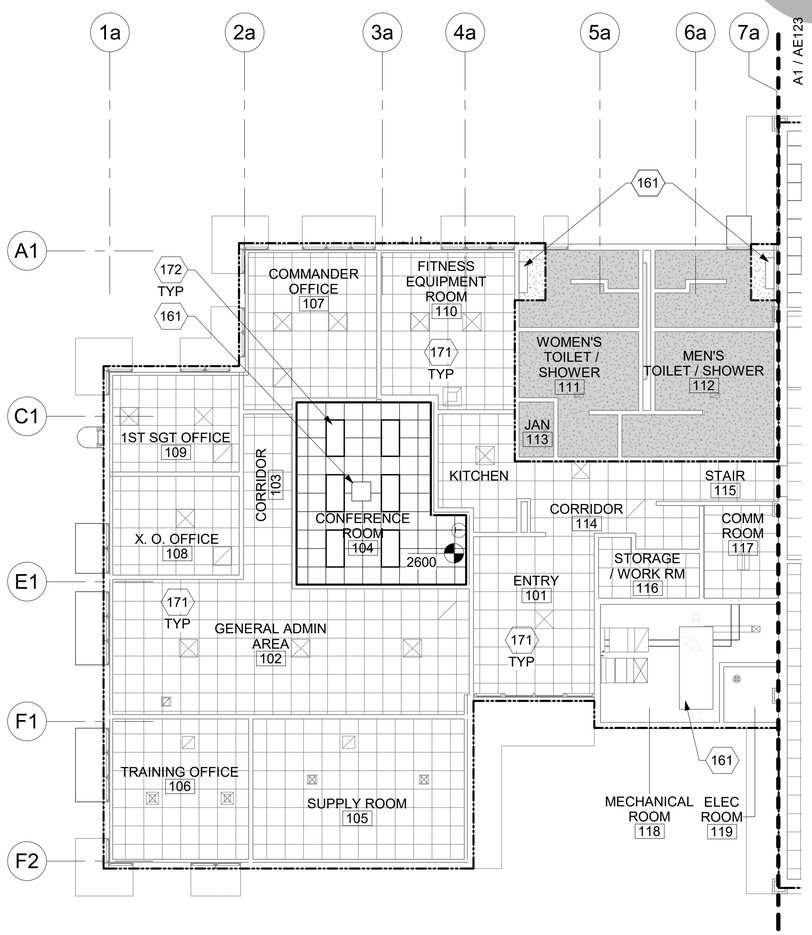

A1 PARTIAL REFLECTED CEILING PLAN - AREA A

1 : 100

DRAFT

GENERAL NOTES - REFLECTED CEILING PLANS

A	REFER TO AE122 AND AE123 FOR PARTIAL REFLECTED CEILING PLANS.
B	PROVIDE MOISTURE RESISTANT GYPSUM BOARD IN TOILET ROOM.
C	REPLACE ACOUSTICAL CEILING TILES REMOVED DURING DEMOLITION AT ALL MECHANICAL WORK LOCATIONS AS REQUIRED. REFER MECHANICAL FOR MORE INFORMATION
D	GYPSUM BOARD AND ACOUSTICAL CEILINGS TO BE 2400mm ABOVE FINISH FLOOR UNLESS OTHERWISE NOTED.
E	ADHERE GYPSUM BOARD CEILING TILES TO VAULT ROOM 114 EXISTING CONCRETE LID SURFACE AS REQUIRED TO MATCH EXISTING DESIGN FINISH.

SHEET KEYNOTES

161	MECHANICAL EQUIPMENT, REFER MECHANICAL.
171	ACOUSTICAL CEILING SYSTEM TO BE RE-INSTALLED AS REQUIRED. REPLACE IN KIND DAMAGED ACOUSTICAL CEILING TILES TO MATCH ADJACENT CEILING. COORDINATE CEILING MOUNTED EQUIPMENT WITH MECHANICAL, ELECTRICAL AND FIRE PROTECTION.
172	LIGHT FIXTURE, REFER ELECTRICAL.

PLAN LEGEND

APPROXIMATE AREAS OF CONSTRUCTION

NOT IN SCOPE

REFLECTED CEILING PLAN LEGEND

GYPSUM BOARD CEILING AS SCHEDULED CONTROL JOINT

600x600mm ACOUSTICAL CEILING TILE AS SCHEDULED CENTERED IN SPACE AS INDICATED

SPRINKLERS, SMOKE DETECTORS, AND SPEAKER STROBES; REFER TO FIRE PROTECTION DRAWINGS.

LIGHT FIXTURE; REFER TO ELECTRICAL DRAWINGS.

EXIT LIGHT FIXTURE; REFER TO ELECTRICAL DRAWINGS.

RETURN AIR GRILLE; REFER TO MECHANICAL DRAWINGS.

SUPPLY AIR DIFFUSERS; REFER TO MECHANICAL DRAWINGS.

KEY PLAN

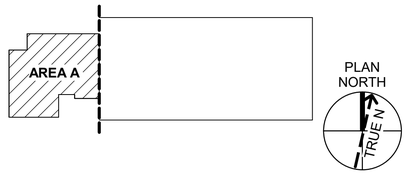

GRAPHIC SCALE(S)

0 2000 4000

SCALE: 1:100

US Army Corps of Engineers
Japan District ®

FOR REVIEW ONLY

THESE DOCUMENTS ARE FOR CONCEPT DESIGN AND NOT INTENDED FOR CONSTRUCTION, BIDDING OR PERMIT PURPOSES. THEY WERE PREPARED BY, OR UNDER SUPERVISION OF:

Christopher M. Surles
NAME

TX 23638 — REGISTRATION #
09/04/2025 — DATE

TEXAS REGISTERED ENGINEERING FIRM F-2966

MARK	DESCRIPTION	DATE

DESIGNED BY: C.SURLES
DRAWN BY: J.METZLER
CHECKED BY: K. CARLSON
SUBMITTED BY: A. GUERRA
SIZE: ISO A1
FILE NAME: AE122
ISSUE DATE: 09/04/2025
SOLICITATION NO.:
CONTRACT NO.:
DRAWING CODE:

US ARMY CORPS OF ENGINEERS
JAPAN ENGINEER DISTRICT
OKINAWA, JAPAN

Jacobs
JACOBS GOVERNMENT SERVICES COMPANY
777 MAIN STREET / FORT WORTH, TX 76102
USA

FY25 REPAIR HVAC WIDEBAND SATCOM OPS B100
CAMP BUCKNER COMMUNICATIONS ANNEX
OKINAWA, JAPAN
PROJECT NUMBER:D3449305

PARTIAL REFLECTED CEILING PLAN - AREA A

SHEET ID

AE122

AE AE122-

FILE PATH: C:_Revit_Local_Models\2022\D3449305-A-3D_Jake.Metzler.rvt
PLOT DATE: 8/29/2025 10:32:55 AM PLOTTED BY: PLOT SCALE: As indicated

BACKCHECK SUBMITTAL DESIGN

REFLECTED CEILING PLAN LEGEND

	GYPSUM BOARD CEILING AS SCHEDULED CONTROL JOINT
	600x600mm ACOUSTICAL CEILING TILE AS SCHEDULED CENTERED IN SPACE AS INDICATED
	SPRINKLERS, SMOKE DETECTORS, AND SPEAKER STROBES; REFER TO FIRE PROTECTION DRAWINGS.
	LIGHT FIXTURE; REFER TO ELECTRICAL DRAWINGS.
	EXIT LIGHT FIXTURE; REFER TO ELECTRICAL DRAWINGS.
	RETURN AIR GRILLE; REFER TO MECHANICAL DRAWINGS.
	SUPPLY AIR DIFFUSERS; REFER TO MECHANICAL DRAWINGS.

GENERAL NOTES - REFLECTED CEILING PLANS

A	REFER TO AE122 AND AE123 FOR PARTIAL REFLECTED CEILING PLANS.
B	PROVIDE MOISTURE RESISTANT GYPSUM BOARD IN TOILET ROOM.
C	REPLACE ACOUSTICAL CEILING TILES REMOVED DURING DEMOLITION AT ALL MECHANICAL WORK LOCATIONS AS REQUIRED. REFER MECHANICAL FOR MORE INFORMATION
D	GYPSUM BOARD AND ACOUSTICAL CEILINGS TO BE 2400mm ABOVE FINISH FLOOR UNLESS OTHERWISE NOTED.
E	ADHERE GYPSUM BOARD CEILING TILES TO VAULT ROOM 114 EXISTING CONCRETE LID SURFACE AS REQUIRED TO MATCH EXISTING DESIGN FINISH.

SHEET KEYNOTES

134	COORDINATE WITH MECHANICAL FOR SECURE PENETRATION AS REQUIRED.
171	ACOUSTICAL CEILING SYSTEM TO BE RE-INSTALLED AS REQUIRED. REPLACE IN KIND DAMAGED ACOUSTICAL CEILING TILES TO MATCH ADJACENT CEILING. COORDINATE CEILING MOUNTED EQUIPMENT WITH MECHANICAL, ELECTRICAL AND FIRE PROTECTION.
172	LIGHT FIXTURE, REFER ELECTRICAL.
175	OPEN TO STRUCTURE ABOVE.

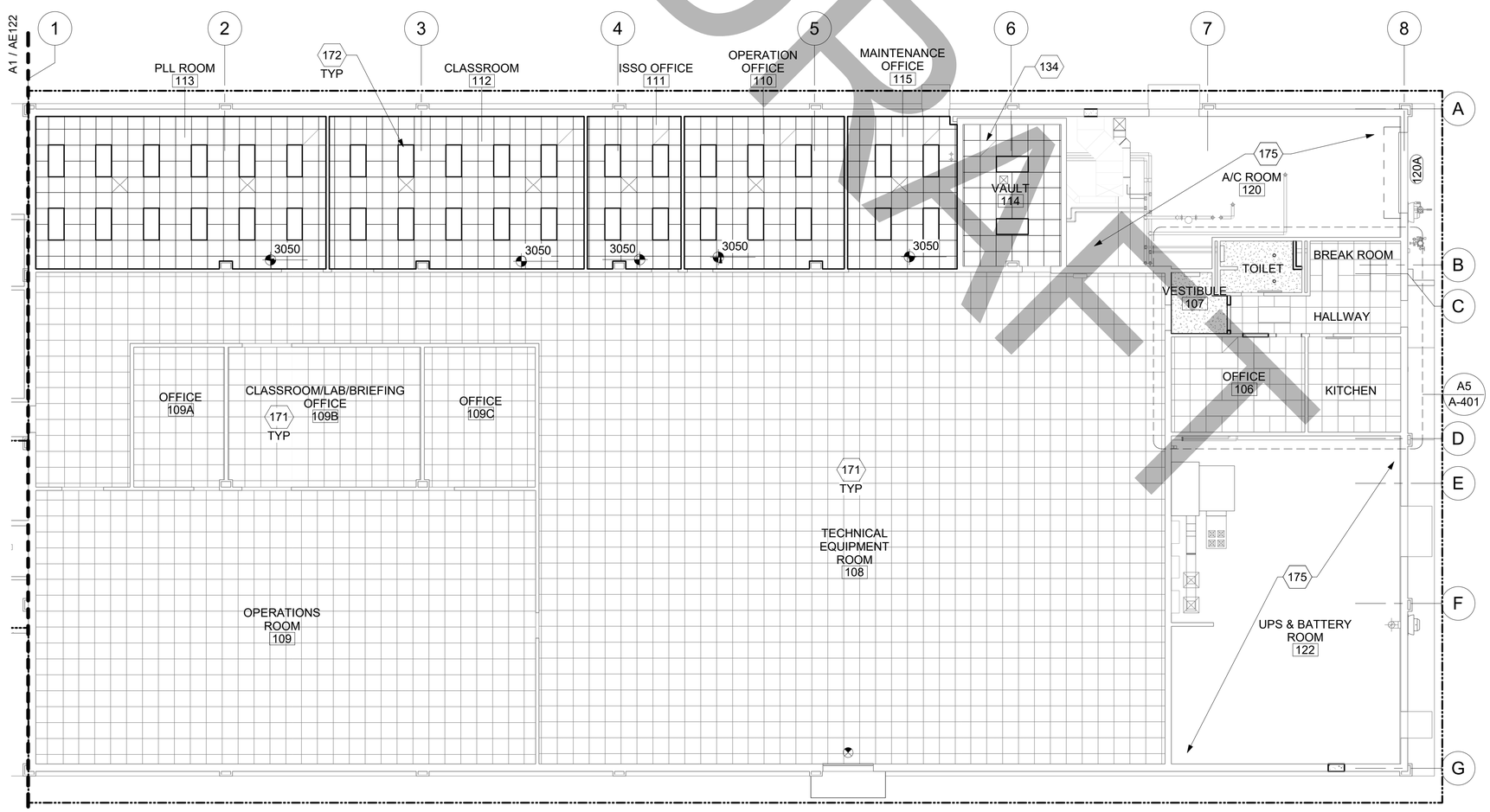

A1 PARTIAL REFLECTED CEILING PLAN - AREA B
1 : 100

PLAN LEGEND

	APPROXIMATE AREAS OF CONSTRUCTION
	NOT IN SCOPE

KEY PLAN

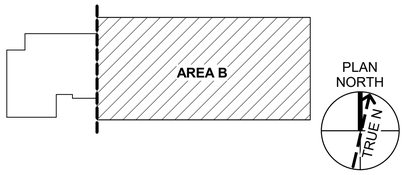

GRAPHIC SCALE(S)

0 2000 4000
SCALE: 1:100

US Army Corps of Engineers
Japan District ®

FOR REVIEW ONLY

THESE DOCUMENTS ARE FOR CONCEPT DESIGN AND NOT INTENDED FOR CONSTRUCTION, BIDDING OR PERMIT PURPOSES. THEY WERE PREPARED BY, OR UNDER SUPERVISION OF:

Christopher M. Surles
NAME
TX 23638 09/04/2025
REGISTRATION # DATE
TEXAS REGISTERED ENGINEERING FIRM F-2966

MARK	DESCRIPTION	DATE

ISSUE DATE: 09/04/2025
SOLICITATION NO.: -
CONTRACT NO.: -
DRAWING CODE: -

DESIGNED BY: C.SURLES
DRAWN BY: J. METZLER
CHECKED BY: K. CARLSON
SUBMITTED BY: A. GUERRA
SIZE: ISO A1
FILE NAME: AE123

US ARMY CORPS OF ENGINEERS
JAPAN ENGINEER DISTRICT
OKINAWA, JAPAN

Jacobs
JACOBS GOVERNMENT SERVICES COMPANY
777 MAIN STREET, FORT WORTH, TX 76102
USA

FY25 REPAIR HVAC WIDEBAND SATCOM OPS B100
CAMP BUCKNER COMMUNICATIONS ANNEX
OKINAWA, JAPAN
PROJECT NUMBER:D3449305

PARTIAL REFLECTED CEILING PLAN - AREA B

SHEET ID
AE123

DRAFT

FILE PATH: C:_Revit_Local_Models\2022\D3449305-A-3D_Jake.Metzler.rvt
PLOT DATE: 8/29/2025 10:32:58 AM PLOTTED BY: PLOT SCALE: As indicated

BACKCHECK SUBMITTAL DESIGN

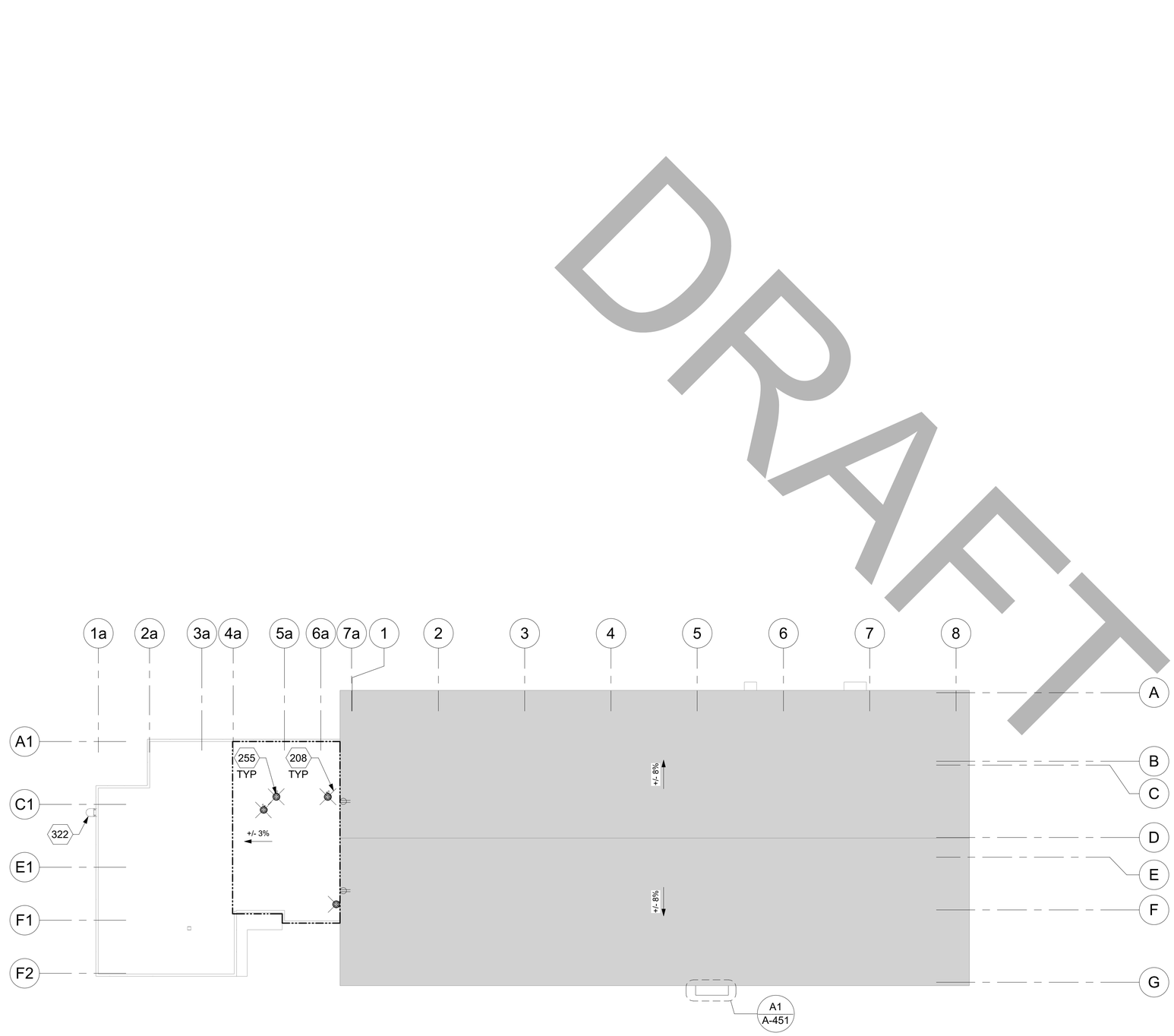

A1 OVERALL ROOF PLAN
1 : 200

DRAFT

GENERAL NOTES - ROOF PLANS

A	COORDINATE THE PROPOSED ROOF RENOVATION WORK WITH CURRENT ROOF WARRANTY
B	EXISTING CONSTRUCTION SHOWN BASED UPON OWNER FURNISHED PLANS. FIELD VERIFY EXISTING CONDITIONS AND VERIFY CONSTRUCTION LAYOUT PRIOR TO COMMENCEMENT OF CONSTRUCTION. REPORT ANY DISCREPANCIES BETWEEN DRAWINGS AND ACTUAL FIELD CONDITIONS TO THE CONTRACTING OFFICER PRIOR TO PROCEEDING WITH WORK.

SHEET KEYNOTES

208	PROVIDE STAINLESS STEEL TYPHOON ROOF EQUIPMENT TIE DOWN ASSEMBLY TO INCLUDE 5MM, 7 X 7 STAINLESS STEEL WIRE ROPE, BRACKETS, TURNBUCKLES, WIRE ROPE CLIPS, FLANGE NUTS, FLAT WASHERS AND CABLE THIMBLES, AS REQUIRED FOR A COMPLETE ASSEMBLY BASED ON THE DESIGN WIND LOADS INDICATED.
255	ROOF EXHAUST FAN; REFER MECHANICAL.
322	EXISTING ROOF LADDER AND CAGE TO REMAIN.

PLAN LEGEND

APPROXIMATE AREAS OF CONSTRUCTION

NOT IN SCOPE

KEY PLAN

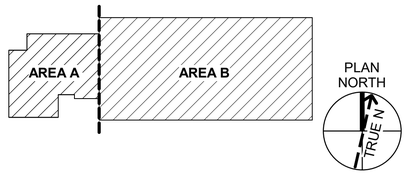

GRAPHIC SCALE(S)

0 4000 8000

SCALE: 1:200

US Army Corps of Engineers
Japan District ®

FOR REVIEW ONLY

THESE DOCUMENTS ARE FOR CONCEPT DESIGN AND NOT INTENDED FOR CONSTRUCTION, BIDDING OR PERMIT PURPOSES. THEY WERE PREPARED BY, OR UNDER SUPERVISION OF:

Christopher M. Surles
NAME

TX 23638 — REGISTRATION #
09/04/2025 — DATE

TEXAS REGISTERED ENGINEERING FIRM F-2966

MARK	DESCRIPTION	DATE

DESIGNED BY: C.SURLES	ISSUE DATE: 09/04/2025
DRAWN BY: J. METZLER	SOLICITATION NO.:
CHECKED BY: K. CARLSON	CONTRACT NO.:
SUBMITTED BY: A. GUERRA	DRAWING CODE:
SIZE: ISO A1	FILE NAME: AE131

US ARMY CORPS OF ENGINEERS
JAPAN ENGINEER DISTRICT
OKINAWA, JAPAN

Jacobs
JACOBS GOVERNMENT SERVICES COMPANY
777 MAIN STREET, FORT WORTH, TX 76102
USA

FY25 REPAIR HVAC WIDEBAND SATCOM OPS B100
CAMP BUCKNER COMMUNICATIONS ANNEX
OKINAWA, JAPAN
PROJECT NUMBER:D3449305

OVERALL ROOF PLAN

SHEET ID

AE131

FILE PATH: C:_Revit_Local_Models\2022\D3449305-A-3D_Jake.Metzler.rvt
PLOT DATE: 8/29/2025 10:33:01 AM PLOTTED BY: PLOT SCALE: As indicated

BACKCHECK SUBMITTAL DESIGN

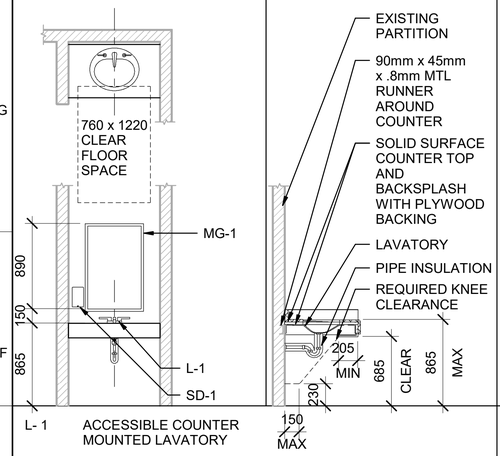

L- 1 ACCESSIBLE COUNTER MOUNTED LAVATORY

MG - 1 MIRROR WITH STAINLESS STEEL FRAME (SALVAGE AND REINSTALL)

SD - 1 SURFACE MOUNTED SOAP DISPENSER (SALVAGE AND REINSTALL)

L1 ACCESSIBLE COUNTER MOUNTED LAVATORY

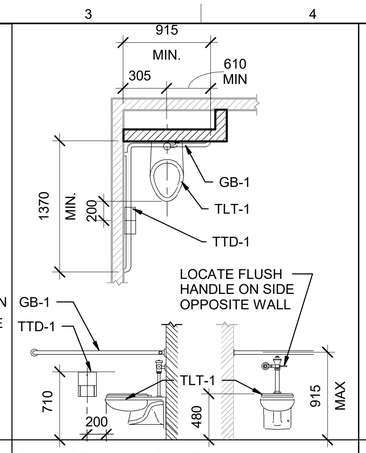

GB-1 GRAB BAR L-SHAPE

TLT-1 ACCESSIBLE TOILET

TTD-1 SURFACE MOUNTED TOILET PAPER DISPENSER (SALVAGE AND REINSTALL)

T1 ACCESSIBLE TOILET

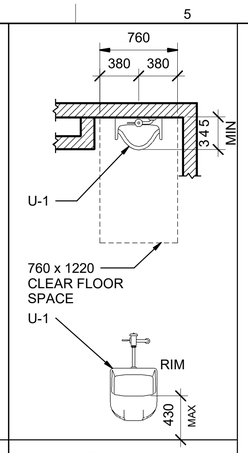

URL-1 ACCESSIBLE URINAL (SALVAGE AND REINSTALL)

U1 ACCESSIBLE URINAL

DRAFT

GENERAL NOTES - RESTROOM PLANS

A	PROVIDE CEMENT BOARD AT TILED WET WALL LOCATIONS IN RESTROOM. PROVIDE WATER RESISTANT GYPSUM BOARD AT PAINTED WALL AND CEILING LOCATIONS IN RESTROOM. REFER A-601 FOR FINISHES.
B	REFER TO PLAN FOR QUANTITIES AND ORIENTATION OF TOILET ACCESSORIES.
C	SALVAGE AND REINSTALL ALL WALL MOUNTED TOILET ACCESSORIES. REPLACE IN KIND IF DAMAGED DURING DEMOLITION PHASE.

GENERAL NOTES - REFLECTED CEILING PLANS

A	REFER TO AE122 AND AE123 FOR PARTIAL REFLECTED CEILING PLANS.
B	PROVIDE MOISTURE RESISTANT GYPSUM BOARD IN TOILET ROOM.
C	REPLACE ACOUSTICAL CEILING TILES REMOVED DURING DEMOLITION AT ALL MECHANICAL WORK LOCATIONS AS REQUIRED. REFER MECHANICAL FOR MORE INFORMATION
D	GYPSUM BOARD AND ACOUSTICAL CEILINGS TO BE 2400mm ABOVE FINISH FLOOR UNLESS OTHERWISE NOTED.
E	ADHERE GYPSUM BOARD CEILING TILES TO VAULT ROOM 114 EXISTING CONCRETE LID SURFACE AS REQUIRED TO MATCH EXISTING DESIGN FINISH.

SHEET KEYNOTES

146	RELOCATE EXISTING LOCKER STORAGE, HARDWARE, AND ACCESSORIES AS FURNISHED.
154	VINYL COMPOSITE TILE AS INDICATED FOR DOOR RELOCATION, MATCH ADJACENT EXISTING VINYL COMPOSITE TILE
156	MECHANICAL CRAC UNIT; REFER MECHANICAL.
158	ELECTRICAL EQUIPMENT, REFER ELECTRICAL.
161	MECHANICAL EQUIPMENT, REFER MECHANICAL.
172	LIGHT FIXTURE, REFER ELECTRICAL.
176	WALL INFILL AT DEMOLISHED DOOR OPENING TO MATCH ADJACENT CONSTRUCTION.
177	RELOCATED DOOR.
188	EXISTING LIGHT FIXTURE TO REMAIN UNDISTURBED, REFER ELECTRICAL.
235	GYPSUM BOARD CEILING, REFER MECHANICAL, ELECTRICAL AND FIRE PROTECTION FOR CEILING MOUNTED EQUIPMENT.
380	ABA ACCESSIBLE COUNTER MOUNTED LAVATORY.

REFLECTED CEILING PLAN LEGEND

	GYPSUM BOARD CEILING AS SCHEDULED CONTROL JOINT
	600x600mm ACOUSTICAL CEILING TILE AS SCHEDULED CENTERED IN SPACE AS INDICATED
	SPRINKLERS, SMOKE DETECTORS, AND SPEAKER STROBES; REFER TO FIRE PROTECTION DRAWINGS.
	LIGHT FIXTURE; REFER TO ELECTRICAL DRAWINGS.
	EXIT LIGHT FIXTURE; REFER TO ELECTRICAL DRAWINGS.
	RETURN AIR GRILLE; REFER TO MECHANICAL DRAWINGS.
	SUPPLY AIR DIFFUSERS; REFER TO MECHANICAL DRAWINGS.

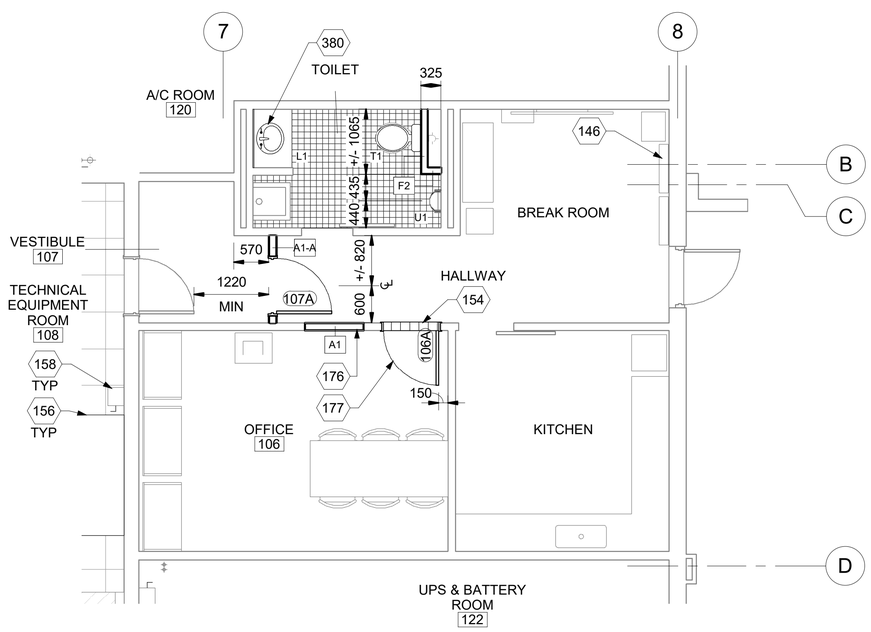

A1 ENLARGED SUPPORT SPACES FLOOR PLAN
1 : 50

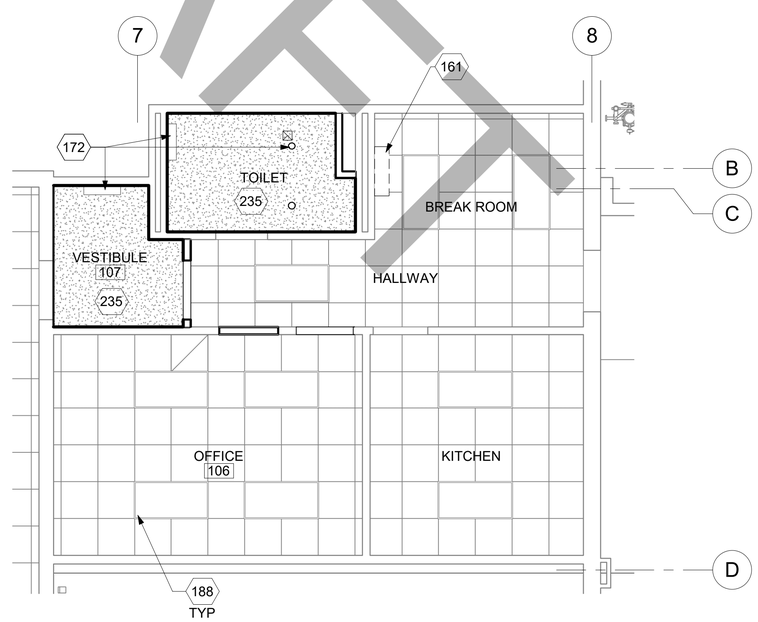

A5 ENLARGED SUPPORT SPACES REFLECTED CEILING PLAN
1 : 50

0 500 1000 2000
SCALE: 1:50

PLAN NORTH
TRUE N

US Army Corps of Engineers
Japan District ®

FOR REVIEW ONLY
THESE DOCUMENTS ARE FOR CONCEPT DESIGN AND NOT INTENDED FOR CONSTRUCTION, BIDDING OR PERMIT PURPOSES. THEY WERE PREPARED BY, OR UNDER SUPERVISION OF:
Christopher M. Surles
NAME
TX 23638 09/04/2025
REGISTRATION # DATE
TEXAS REGISTERED ENGINEERING FIRM F-2966

MARK	DESCRIPTION	DATE

ISSUE DATE: 09/04/2025
SOLICITATION NO.:
CONTRACT NO.:
DRAWING CODE:

DESIGNED BY: C.SURLES
DRAWN BY: J. METZLER
CHECKED BY: K. CARLSON
SUBMITTED BY: A. GUERRA
SIZE: ISO A1
FILE NAME: A-401

US ARMY CORPS OF ENGINEERS
JAPAN ENGINEER DISTRICT
OKINAWA, JAPAN

Jacobs
JACOBS GOVERNMENT SERVICES COMPANY
777 MAIN STREET | FORT WORTH, TX 76102
USA

FY25 REPAIR HVAC WIDEBAND SATCOM OPS B100
CAMP BUCKNER COMMUNICATIONS ANNEX
OKINAWA, JAPAN
PROJECT NUMBER:D3449305

ENLARGED PLANS - VESTIBULE, TOILET AND TOILET ACCESSORIES

SHEET ID
A-401

A A-401-

FILE PATH: C:_Revit_Local_Models\2022\D3449305-A-3D_Jake.Metzler.rvt
PLOT DATE: 8/29/2025 10:32:13 AM PLOTTED BY: PLOT SCALE: As indicated

BACKCHECK SUBMITTAL DESIGN

SHEET KEYNOTES

149	EXISTING ACOUSTICAL CEILING TO REMAIN UNDISTURBED FOR ADJACENT CONSTRUCTION.
207	EXISTING WALL TO REMAIN.
258	CAST-IN-PLACE CONCRETE CANOPY; CENTER OVER EXTERIOR DOOR, PAINT EX-2 AT SIDES AND FACE TO MATCH EXISTING ADJACENT CANOPIES.REFER STRUCTURAL
307	PATCH AND REPAIR EXTERIOR INSULATION AND FINISH SYSTEM DAMAGED DURING CONSTRUCTION OF THE CONCRETE CANOPY, TYPICAL ALL SIDES OF CANOPY. TEXTURE AND FINISH TO MATCH ADJACENT EXISTING WALLS, EX-1
312	EXTERIOR INSULATION AND FINISH SYSTEM, PAINT TO MATCH ADJACENT EXISTING WALLS, EX-2
316	CONCRETE REINFORCEMENT WITH THREADED ENDS EXTENDED THROUGH EXISTING WALL. REFER STRUCTURAL.
324	RELOCATED SALVAGED EXIT SIGN
338	DOOR AND FRAME AS SCHEDULED

DRAFT

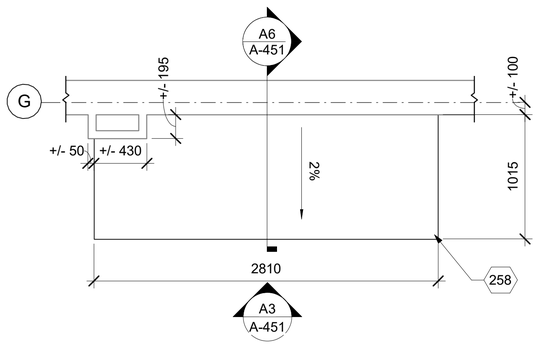

A1 CANOPY ROOF DETAIL
1 : 25

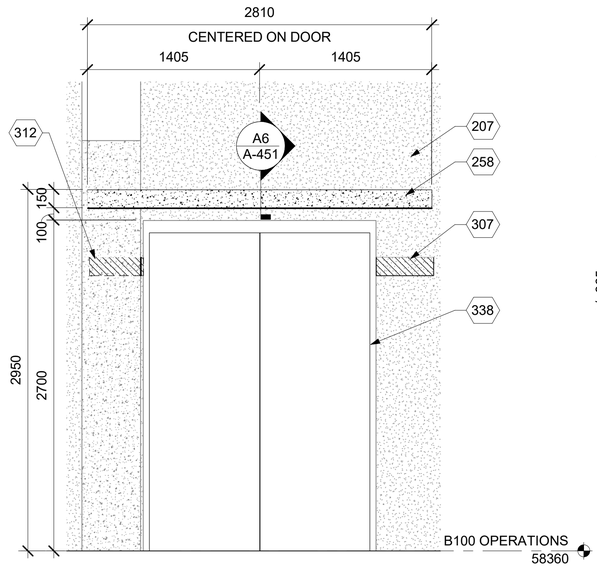

A3 CANOPY ELEVATION
1 : 25

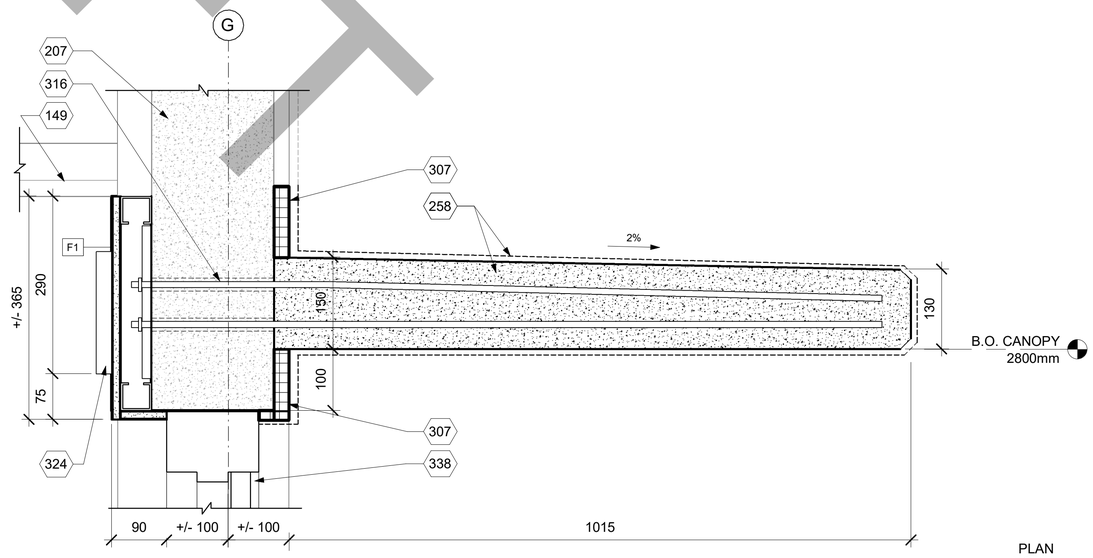

A6 CONCRETE CANOPY - SECTION
1 : 5

0 50 100 200
SCALE: 1:5

0 25 50 100
SCALE: 1:25

PLAN NORTH
TRUE N

US Army Corps of Engineers
Japan District ®

FOR REVIEW ONLY

THESE DOCUMENTS ARE FOR CONCEPT DESIGN AND NOT INTENDED FOR CONSTRUCTION, BIDDING OR PERMIT PURPOSES. THEY WERE PREPARED BY, OR UNDER SUPERVISION OF:

Christopher M. Surles
NAME

TX 23638 — REGISTRATION #
09/04/2025 — DATE

TEXAS REGISTERED ENGINEERING FIRM F-2966

MARK	DESCRIPTION	DATE

ISSUE DATE: 09/04/2025
SOLICITATION NO.:
CONTRACT NO.:
DRAWING CODE:

DESIGNED BY: C.SURLES
DRAWN BY: J. METZLER
CHECKED BY: K. CARLSON
SUBMITTED BY: A. GUERRA
SIZE: ISO A1
FILE NAME: A-451

US ARMY CORPS OF ENGINEERS
JAPAN ENGINEER DISTRICT
OKINAWA, JAPAN

Jacobs
JACOBS GOVERNMENT SERVICES COMPANY
777 MAIN STREET, FORT WORTH, TX 76102
USA

FY25 REPAIR HVAC WIDEBAND SATCOM OPS B100
CAMP BUCKNER COMMUNICATIONS ANNEX
OKINAWA, JAPAN
PROJECT NUMBER:D3449305

CANOPY DETAILS

SHEET ID
A-451

A A-451-

FILE PATH: C:_Revit_Local_Models\2022\D3449305-A-3D_Jake.Metzler.rvt
PLOT DATE: 8/29/2025 10:32:15 AM PLOTTED BY: PLOT SCALE: As indicated

BACKCHECK SUBMITTAL DESIGN

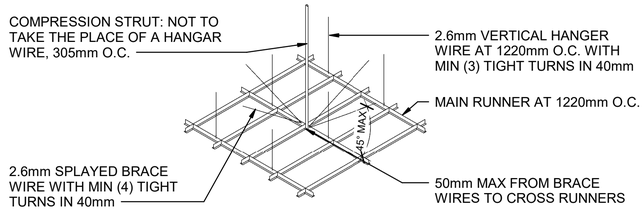

F1 CEILING PANEL GRID SYSTEM

SCALE: NOT TO SCALE

NOTE:
COMPRESSION STRUT REQUIRED AT EACH SEISMIC RESTRAINT AT 3660mm O.C. EACH WAY, OR EVERY 13.3m2 OF CEILING AREA

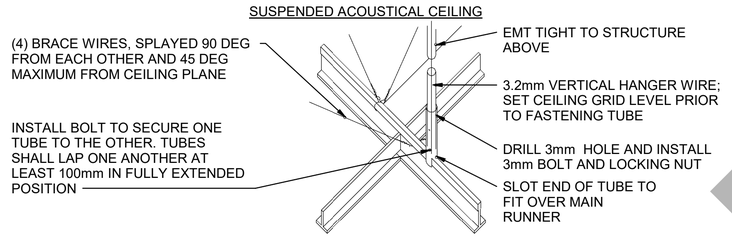

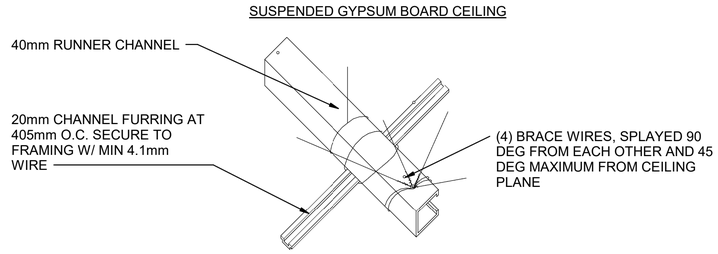

D1 SEISMIC SUSPENSION SYSTEM

SCALE: NOT TO SCALE

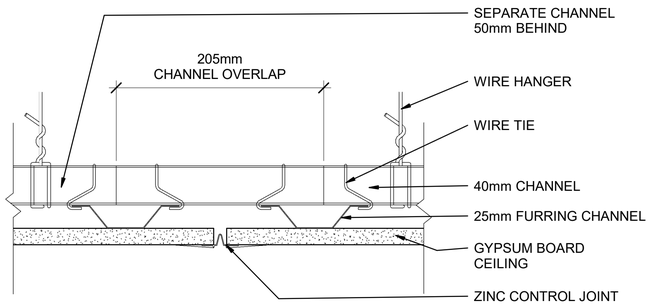

B1 TYP CJ AT GYP BD CEILING

SCALE: NOT TO SCALE

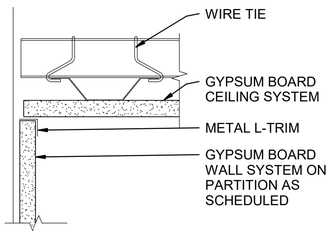

A1 TYP GYP BD CLG TO WALL

SCALE: NOT TO SCALE

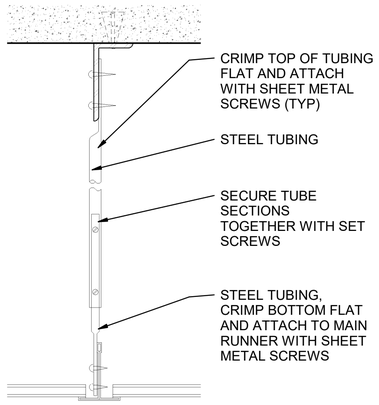

F4 VERTICAL STRUT AT DECK

SCALE: NOT TO SCALE

NOTE:
LIGHT FIXTURE OR DIFFUSERS IN EXCESS OF 22.6 kg REQUIRE (4) 3.2mm HANGER WIRES

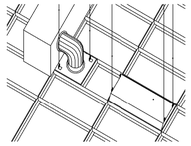

F7 FIXTURE BRACING DETAIL

SCALE: NOT TO SCALE

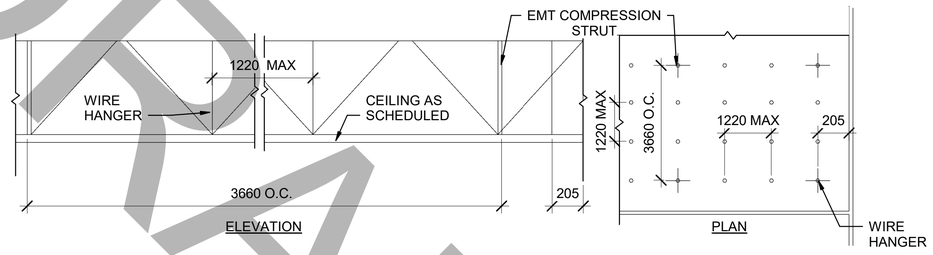

D4 SIESMIC SUSPENSION SYSTEM (PLAN/ELEVATION)

SCALE: NOT TO SCALE

GENERAL NOTES - CEILING DETAILS

A	ALL CEILING SUSPENSION SYSTEMS TO COMPLY WITH JAPANESE INDUSTRIAL STANDARDS (JIS)
B	PROVIDE LATERAL SUPPORT WITH 3.2mm WIRES SPLAYED IN 4 DIRECTIONS, 90 DEGREES APART. CONNECT AT MAIN RUNNER WITH 600mm OF CROSSRUNNER AND STRUCTURE ABOVE AT ANGLE NOT TO EXCEED 45 DEGREES FROM PLANE OF CEILING. THESE LATERAL SUPPORTS TO BE 3660mm O.C. AND WITHIN 1220mm FROM EACH WALL. NO ATTACHMENT TO ROOF DECK
C	ALLOWANCE TO BE PROVIDED FOR LATERAL MOVEMENT OF SYSTEM. MAIN AND CROSSRUNNERS MAY BE ATTACHED TO ADJACENT WALLS WITH CLEARANCE BETWEEN WALL AND RUNNER REMAINING TWO WALLS. RECESSED LIGHT FIXTURES NOT OVER 9 KILOGRAMS MAY BE POSITIVELY ATTACHED TO CEILING SYSTEM RUNNERS WITH SCREW OR BOLTS
D	PROVIDE ACOUSTIC RATED TOP AND BOTTOM TERMINATION AND SOUND ATTENUATION BATTS FOR NON-RATED PARTITIONS, REFER SHEET A-601

DRAFT

US Army Corps of Engineers
Japan District ®

FOR REVIEW ONLY
THESE DOCUMENTS ARE FOR CONCEPT DESIGN AND NOT INTENDED FOR CONSTRUCTION, BIDDING OR PERMIT PURPOSES. THEY WERE PREPARED BY, OR UNDER SUPERVISION OF:
Christopher M. Surles
NAME
TX 23638 — REGISTRATION #
09/04/2025 — DATE
TEXAS REGISTERED ENGINEERING FIRM F-2966

MARK	DESCRIPTION	DATE

ISSUE DATE: 09/04/2025
SOLICITATION NO.:
CONTRACT NO.:
DRAWING CODE:

DESIGNED BY: C.SURLES
DRAWN BY: J. METZLER
CHECKED BY: K. CARLSON
SUBMITTED BY: A. GUERRA
SIZE: ISO A1
FILE NAME: A-521

US ARMY CORPS OF ENGINEERS
JAPAN ENGINEER DISTRICT
OKINAWA, JAPAN

Jacobs
JACOBS GOVERNMENT SERVICES COMPANY
777 MAIN STREET, FORT WORTH, TX 76102
USA

FY25 REPAIR HVAC WIDEBAND SATCOM OPS B100
CAMP BUCKNER COMMUNICATIONS ANNEX
OKINAWA, JAPAN
PROJECT NUMBER:D3449305

CEILING DETAILS

SHEET ID
A-521

A A-521-

FILE PATH: C:_Revit_Local_Models\2022\D3449305-A-3D_Jake.Metzler.rvt
PLOT DATE: 8/29/2025 10:32:17 AM PLOTTED BY: PLOT SCALE: As indicated

BACKCHECK SUBMITTAL DESIGN

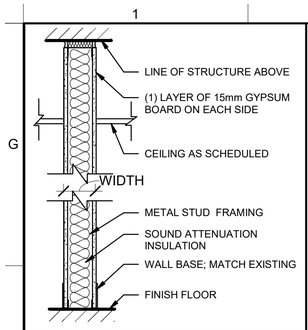

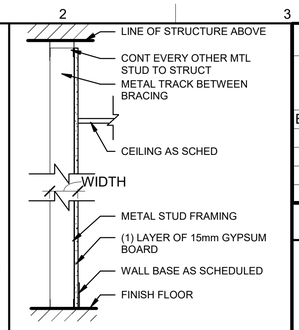

TYPE	A		
SIZE INDICATOR	IND	STUD SIZE	TOTAL WIDTH
	1	90mm	120mm
	-	-	-
	-	-	-
RATING	-	NO RATING-NO INSULATION	
	A	ACOUSTICAL - STC 45	
	-	-	

TYPE	F		
SIZE INDICATOR	IND	STUD SIZE	TOTAL WIDTH
	1	50mm	65mm
	2	90mm	105mm
	-	-	-
RATING	-	-	
	-	-	
	-	-	

DOOR SCHEDULE

NO	TYPE	DOOR SIZE WT	DOOR SIZE HT	DOOR SIZE THK	DOOR MATL	DOOR FIN	DOOR GLZ	FRAME TYPE	FRAME MATL	FRAME FIN	DETAILS HEAD	DETAILS JAMB	DETAILS SILL	ASSEMBLY STC	ASSEMBLY FIRE RATING	ASSEMBLY HDWR	REMARKS
B100 OPERATIONS																	
106A	F	900	2100	45	HM	P	-	A	HM	P	D4/A-602	B4/A-602	A4/A-602	40	-	3	1
107A	F	900	2100	45	HM	P	-	A	HM	P	D4/A-602	B4/A-602	A4/A-602	40	-	4	1
108A	PF	1800	2600	45	HM	P	-	B	HM	P	D1/A-602	B1/A-602	A1/A-602	-	-	1	1, 2, 3, 4
120A	OCD	3050	2135	75	SS	FF	-	EXISTING	STL	P	E7/A-602	C7/A-602	A7/A-602	-	-	2	2

FRAME AND LOUVER TYPES

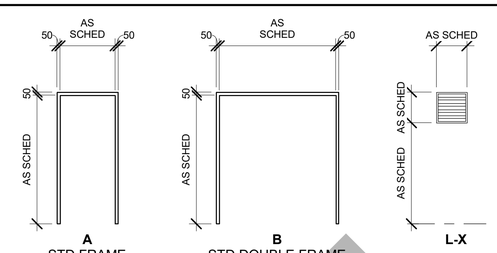

A STD FRAME

B STD DOUBLE FRAME

L-X

DOOR TYPES

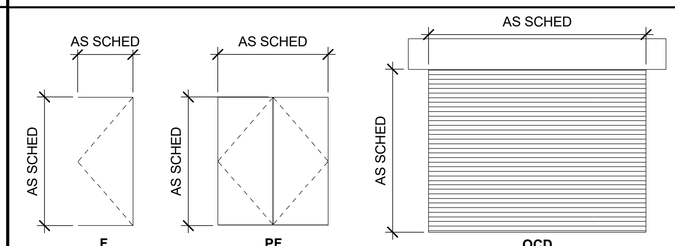

F FLUSH

PF PAIR FLUSH

OCD OVERHEAD COILING DOOR

LOUVER SCHEDULE

TYPE	MATERIAL	FINISH	WIDTH	HEIGHT	SILL HEIGHT
BRL-1	AL	P	305	460	3500
L-1	AL	P	915	460	3170
L-2	AL	P	1015	460	3170

GENERAL NOTES - LOUVERS

1	ALL EXTERIOR LOUVERS TO BE HEAVY DUTY, TYPHOON, IMPACT AND WIND DRIVEN RAIN RESISTANT, REFER MECHANICAL SPECIFICATION FOR MINUMUM FREE AREA.
2	LOUVERS TO BE ANODIZED ALUMINUM AND FINISH TO MATCH ADJACENT WALL COLOR.
3	REFER SHEET A-603 FOR TYPICAL LOUVER DETAILS.

FINISH MATERIAL SCHEDULE

NUMBER	ROOM	FLOOR MATERIAL	FLOOR FINISH	BASE MATERIAL	BASE FINISH	WALL MATERIAL	WALL FINISH	CEILING MATERIAL	CEILING FINISH
B100 OPERATIONS									
-	TOILET	QUARRY FLOOR TILE	FACTORY FINISH	-	-	CERAMIC WALL TILE	FACTORY FINISH	MOISTURE RESISTANT GYPSUM BOARD	PAINT
-	HALLWAY	VINYL COMPOSITE TILE	FACTORY FINISH	RESILIENT BASE	FACTORY FINISH	GYPSUM BOARD	PAINT	ACOUSTICAL CEILING TILE	FACTORY FINISH
106	OFFICE	VINYL COMPOSITE TILE	FACTORY FINISH	RESILIENT BASE	FACTORY FINISH	GYPSUM BOARD	PAINT	ACOUSTICAL CEILING TILE	FACTORY FINISH
107	VESTIBULE	VINYL COMPOSITE TILE	FACTORY FINISH	RESILIENT BASE	FACTORY FINISH	GYPSUM BOARD	PAINT	ACOUSTICAL CEILING TILE	FACTORY FINISH

DO NOT ATTACH GYPSUM BOARD OR STUDS TO TOP TRACK

REFER TO GENERAL NOTES FOR SEALANT AND INSULATION TYPES

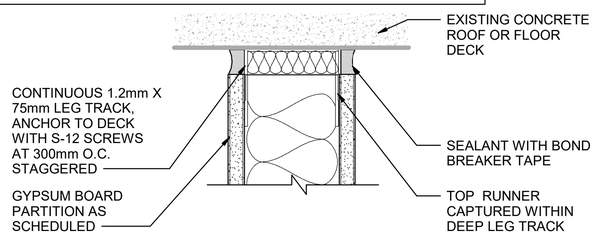

C1 TYPICAL TOP OF GYPSUM BOARD WALL CONNECTION

SCALE: NOT TO SCALE

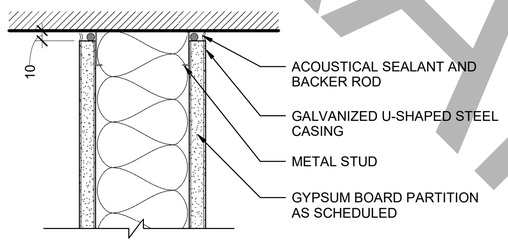

C4 TYPICAL WALL-WALL CONNECTION

SCALE: NOT TO SCALE

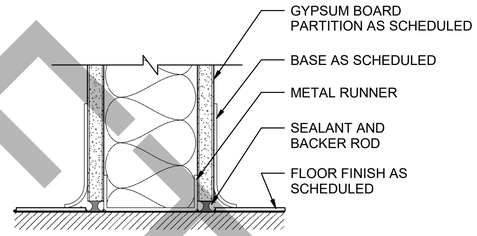

C7 TYPICAL BOTTOM OF WALL CONNECTION

SCALE: NOT TO SCALE

PARTITION TYPES

FIRST DIGIT IS THE PARTITION 'TYPE' — A3-2 — SECOND DIGIT IS THE 'SIZE INDICATOR' THIRD DIGIT IS THE PARTITION 'RATING'

GENERAL SHEET NOTES

A.	"LINE OF STRUCTURE" INDICATED FOR EACH PARTITION IS DIAGRAMMATIC ONLY AND DOES NOT INDICATE EXACT CONSTRUCTION CONDITIONS OR GEOMETRY. REFER TO FOR DETAILS ON THIS SHEET FOR TYPICAL CONNECTION DETAILS.
B.	DO NOT ATTACH METAL STUD TO THE TOP SLIP TRACK.
C.	GYPSUM BOARD: 1. FIRE RESISTANT RATED PARTITIONS TO USE "FIRE RESISTANT" RATED GYPSUM BOARD. 2. PARTITIONS IN HIGH MOISTURE AREAS TO USE MOISTURE RESISTANT GYPSUM BOARD WHICH INCLUDE TOILET ROOM(S),JANITOR CLOSET(S) AND WITHIN 1200mm OF WATER FOUNTAIN. 3. PARTITIONS BEHIND TOILETS, AND FIXTURES TO USE CEMENT BOARD WITH A MOISTURE BARRIER. 4. DO NOT ATTACH GYPSUM BOARD TO THE TOP SLIP TRACK. 5. ALL CEILINGS LOCATED IN RESTROOMS TO USE MOISTURE RESISTANT GYPSUM BOARD. 6. PROVIDE WOOD BLOCKING AT TOILET ACCESSORIES AS REQUIRED.
D.	SEALANT: 1. FIRE RESISTANT RATED PARTITIONS TO USE FIRE STOP SEALANT SYSTEM. 2. NON - RATED PARTITIONS AND SMOKE RATED PARTITIONS TO USE ACOUSTICAL SEALANT. FIRE RESISTANT RATED PARTITIONS MUST NOT USE ACOUSTICAL SEALANT.
E.	INSULATION - HEAD CONDITION AT STRUCTURE ABOVE: 1. FIRE RATED RESISTANT PARTITIONS TO USE MINERAL FIBER INSULATION. 2. NON - RATED PARTITIONS TO USE SOUND ATTENUATION BATT INSULATION WITH MINIMUM 40 kg PER CUBIC METER NOMINAL DENSITY AND RSI-VALUE OF 1.13 PER 50mm THICKNESS.
F.	FIRE AND / OR SMOKE RESISTANT SEALS TO SURROUND ALL OPENINGS IN RATED PARTITIONS.
G.	FIRE AND / OR SMOKE RESISTANT PARTITIONS MUST EXTEND TO INSIDE FACE OF EXTERIOR SHEATHING,INCLUDING EXTENSIONS THROUGH SOFFITS.
H.	EACH PARTITION INDICATED TO BE FIRE AND/OR SMOKE RESISTANT MUST BE IDENTIFIED AS SUCH WITH A LABEL ABOVE THE CEILING ON EACH SEGMENT OF WALL AT 2400mm ON CENTER
I.	STC RATING IS BASED ON A MIN METAL STUD SIZE OF 100mm.
J.	INSTALL HORIZONTAL STUD FRAMING BRACING AT 1200mm ON CENTER AT FURRING AND NON-RATED CHASE WALLS
K.	ALL STUDS ARE 405mm ON CENTER UNLESS OTHERWISE NOTED.
L.	ALL STUDS ARE MINIMUM 0.7mm THICKNESS.
M.	REFER TO FLOOR PLANS FOR LOCATION OF PARTITION TYPE TAGS.
N.	PROVIDE SOUND ATTENTUATING BATT INSULATION AT PARTITION RATING INDICATED WITH ACOUSTICAL - 'A'.

GENERAL NOTES - DOOR SCHEDULE

A	REFER AE103 AND A-401 FOR PARTITION LAYOUT AND DIMENSIONS.

DOOR SCHEDULE REMARKS

1	PROVIDE FLOORING/MATERIAL TRANSITIONS; MATCH ADJACENT EXISTING TRANSITIONS
2	DOOR TO BE INSULATED (RSI-0.42)
3	DOOR TO BE EXIT ONLY WITH NO EXTERIOR HARDWARE
4	PROVIDE THRESHOLD, WEATHER STRIPPING, AND REMOVEABLE ASTRAGAL AT DOOR

SCHEDULE ABBREVIATIONS

AL	ALUMINUM
NO	DOOR NUMBER
FF	FACTORY FINISH
FIN	FINISH
GALV	GALVANIZED
GLZ	GLAZING
HDWR	HARDWARE
HT	HEIGHT
HM	HOLLOW METAL STEEL
MATL	MATERIAL
OCD	OVERHEAD COILING DOOR
P	PAINTED
PCLG	PAIR CHAIN LINK GATE
SS	STAINLESS STEEL
STL	STEEL
THK	THICKNESS
WT	WIDTH

DRAFT

US Army Corps of Engineers
Japan District ®

FOR REVIEW ONLY

THESE DOCUMENTS ARE FOR CONCEPT DESIGN AND NOT INTENDED FOR CONSTRUCTION, BIDDING OR PERMIT PURPOSES. THEY WERE PREPARED BY, OR UNDER SUPERVISION OF:

Christopher M. Surles
NAME
TX 23638 — REGISTRATION # — 09/04/2025 — DATE
TEXAS REGISTERED ENGINEERING FIRM F-2966

MARK	DESCRIPTION	DATE

DESIGNED BY: C.SURLES
DRAWN BY: J. METZLER
CHECKED BY: K. CARLSON
SUBMITTED BY: A. GUERRA
SIZE: ISO A1
FILE NAME: A-601
ISSUE DATE: 09/04/2025
SOLICITATION NO.:
CONTRACT NO.:
DRAWING CODE:

US ARMY CORPS OF ENGINEERS
JAPAN ENGINEER DISTRICT
OKINAWA, JAPAN

Jacobs
JACOBS GOVERNMENT SERVICES COMPANY
777 MAIN STREET, FORT WORTH, TX 76102
USA

FY25 REPAIR HVAC WIDEBAND SATCOM OPS B100
CAMP BUCKNER COMMUNICATIONS ANNEX
OKINAWA, JAPAN
PROJECT NUMBER:D3449305

PARTITION TYPE, DOOR, FRAME AND FINISH SCHEDULES

SHEET ID
A-601

A A-601-

FILE PATH: C:_Revit_Local_Models\2022\D3449305-A-3D_Jake.Metzler.rvt
PLOT DATE: 8/29/2025 10:32:20 AM PLOTTED BY: PLOT SCALE: As indicated

BACKCHECK SUBMITTAL DESIGN

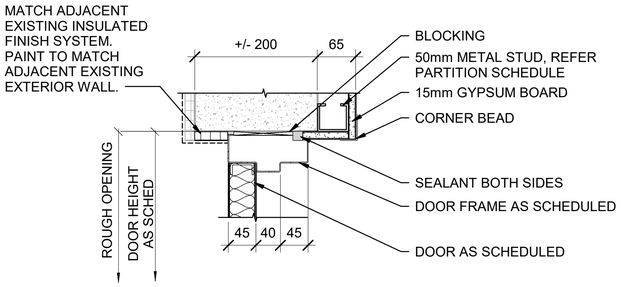

D1 HEAD DETAIL AT EXISTING CONCRETE WALL
1 : 5

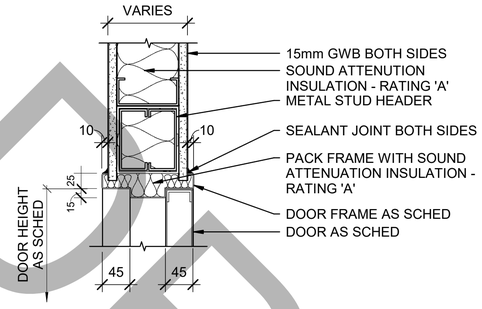

D4 HEAD DETAIL AT METAL STUD WALL
1 : 5

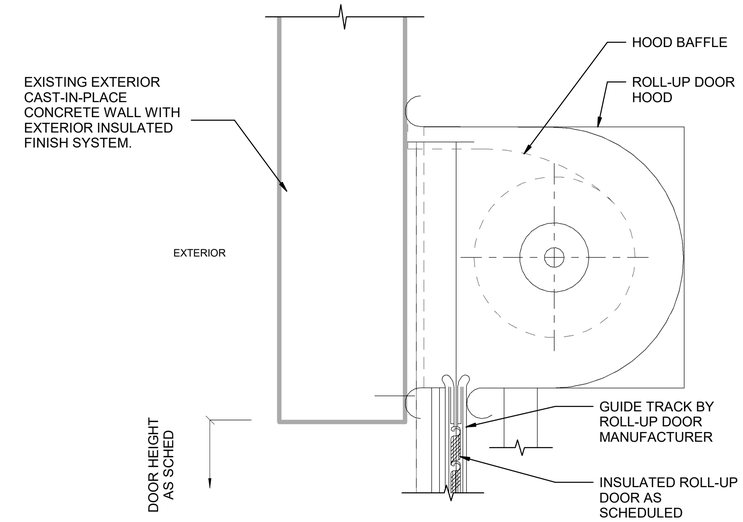

E7 OVERHEAD COILING DOOR HEAD DETAIL
1 : 5

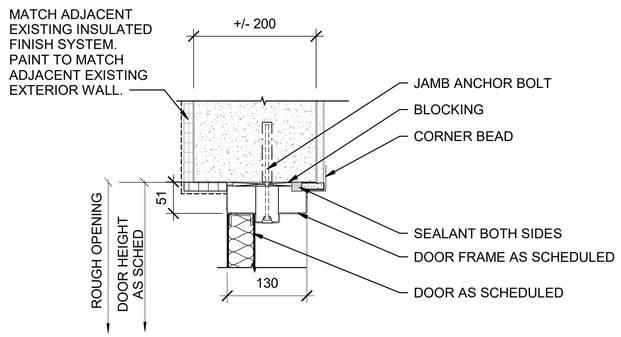

B1 JAMB DETAIL AT EXISTING CONCRETE WALL
1 : 5

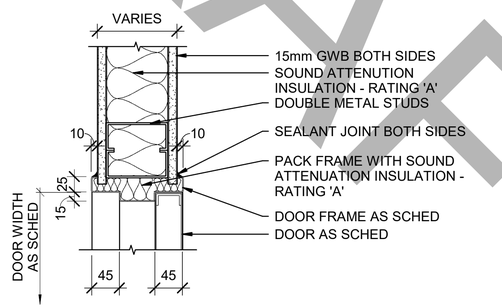

B4 JAMB DETAIL AT METAL STUD WALL
1 : 5

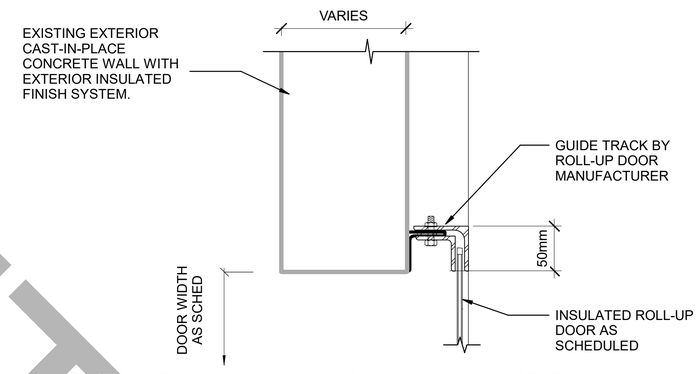

C7 OVERHEAD COILING DOOR JAMB DETAIL
1 : 5

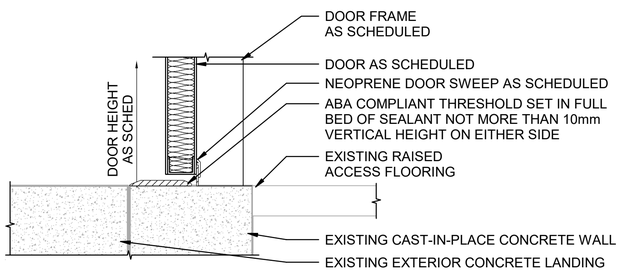

A1 SILL DETAIL AT EXISTING CONCRETE WALL
1 : 5

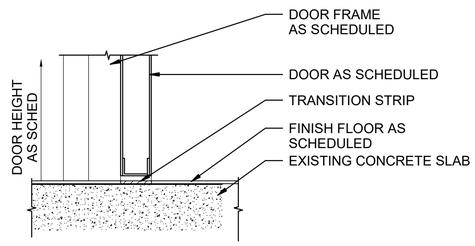

A4 SILL DETAIL AT METAL STUD WALL
1 : 5

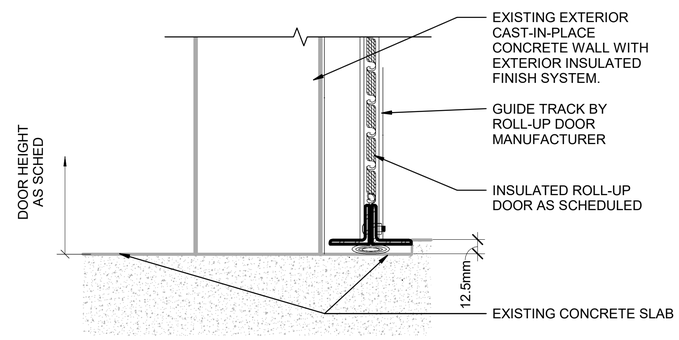

A7 OVERHEAD COILING DOOR SILL DETAIL
1 : 5

0 50 100 200
SCALE: 1:5

DRAFT

US Army Corps of Engineers
Japan District ®

FOR REVIEW ONLY
THESE DOCUMENTS ARE FOR CONCEPT DESIGN AND NOT INTENDED FOR CONSTRUCTION, BIDDING OR PERMIT PURPOSES. THEY WERE PREPARED BY, OR UNDER SUPERVISION OF:
Christopher M. Surles
NAME
TX 23638 09/04/2025
REGISTRATION # DATE
TEXAS REGISTERED ENGINEERING FIRM F-2966

MARK	DESCRIPTION	DATE

ISSUE DATE: 09/04/2025
SOLICITATION NO.:
CONTRACT NO.:
DRAWING CODE:

DESIGNED BY: C.SURLES
DRAWN BY: J. METZLER
CHECKED BY: K. CARLSON
SUBMITTED BY: A. GUERRA
SIZE: ISO A1
FILE NAME: A-602

US ARMY CORPS OF ENGINEERS
JAPAN ENGINEER DISTRICT
OKINAWA, JAPAN

Jacobs
JACOBS GOVERNMENT SERVICES COMPANY
777 MAIN STREET, FORT WORTH, TX 76102
USA

FY25 REPAIR HVAC WIDEBAND SATCOM OPS B100
CAMP BUCKNER COMMUNICATIONS ANNEX
OKINAWA, JAPAN
PROJECT NUMBER:D3449305

DOOR DETAILS

SHEET ID
A-602

A A-602-

FILE PATH: C:_Revit_Local_Models\2022\D3449305-A-3D_Jake.Metzler.rvt
PLOT DATE: 8/29/2025 10:32:22 AM PLOTTED BY: PLOT SCALE: 1 : 5

BACKCHECK SUBMITTAL DESIGN

GENERAL NOTES - LOUVER DETAILS

A	REFER TO SHEET A-601 FOR LOUVER SCHEDULE, TYPES, AND NOTES.

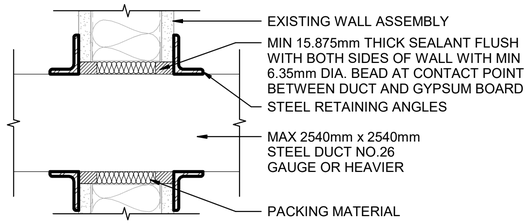

F1 PENETRATION AT DUCT
SCALE: NOT TO SCALE

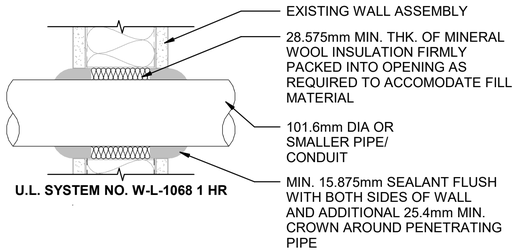

D1 PENETRATIONS AT WALL
SCALE: NOT TO SCALE

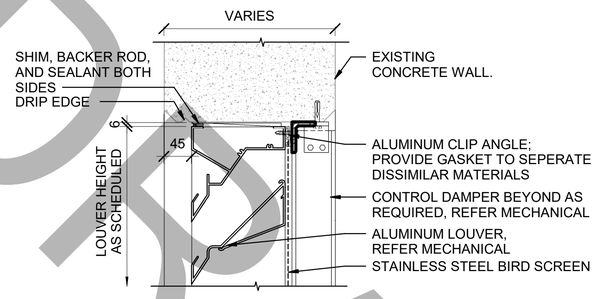

D4 HEAD DETAIL - LOUVER
1 : 5

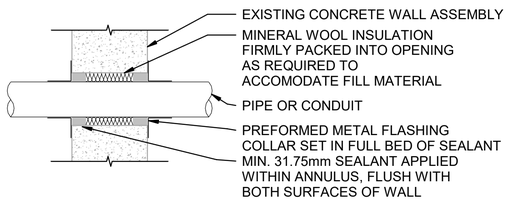

B1 PENETRATION AT WALL - INT AND EXT CONCRETE
SCALE: NOT TO SCALE

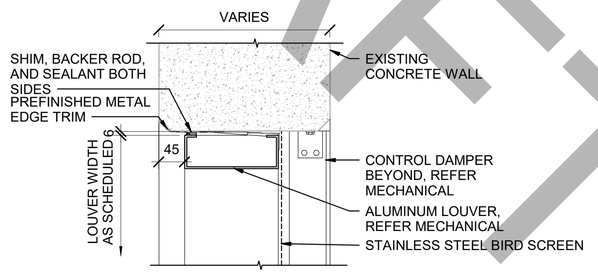

B4 JAMB DETAIL - LOUVER
1 : 5

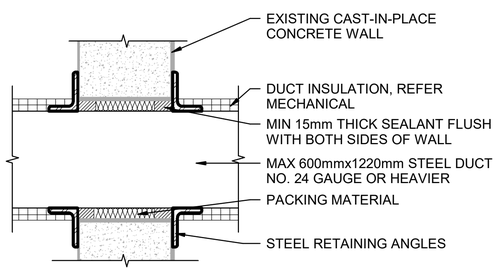

A1 PENETRATIONS AT DUCT - CONCRETE
SCALE: NOT TO SCALE

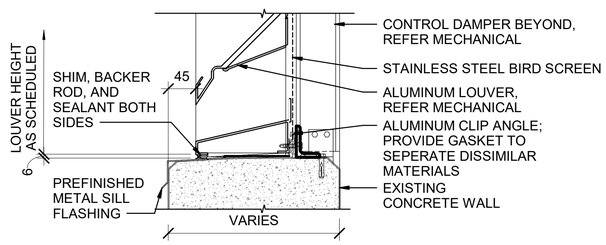

A4 SILL DETAIL - LOUVER
1 : 5

0 50 100 200
SCALE: 1:5

DRAFT

US Army Corps of Engineers
Japan District ®

FOR REVIEW ONLY
THESE DOCUMENTS ARE FOR CONCEPT DESIGN AND NOT INTENDED FOR CONSTRUCTION, BIDDING OR PERMIT PURPOSES. THEY WERE PREPARED BY, OR UNDER SUPERVISION OF:
Christopher M. Surles
NAME
TX 23638 — REGISTRATION #
09/04/2025 — DATE
TEXAS REGISTERED ENGINEERING FIRM F-2966

MARK	DESCRIPTION	DATE

DESIGNED BY: C.SURLES
DRAWN BY: J.METZLER
CHECKED BY: K. CARLSON
SUBMITTED BY: A. GUERRA
SIZE: ISO A1
ISSUE DATE: 09/04/2025
SOLICITATION NO.:
CONTRACT NO.:
DRAWING CODE:
FILE NAME: A-603

US ARMY CORPS OF ENGINEERS
JAPAN ENGINEER DISTRICT
OKINAWA, JAPAN

Jacobs
JACOBS GOVERNMENT SERVICES COMPANY
777 MAIN STREET / FORT WORTH, TX 76102 USA

FY25 REPAIR HVAC WIDEBAND SATCOM OPS B100
CAMP BUCKNER COMMUNICATIONS ANNEX
OKINAWA, JAPAN
PROJECT NUMBER:D3449305

PENETRATION AND LOUVER DETAILS

SHEET ID
A-603

A A-603-

FILE PATH: C:_Revit_Local_Models\2022\D3449305-A-3D_Jake.Metzler.rvt
PLOT DATE: 8/29/2025 10:32:24 AM PLOTTED BY: PLOT SCALE: As indicated

BACKCHECK SUBMITTAL DESIGN

ACOUSTICALLY DISTINGUISHABLE SPACE LEGEND

SPACE	AMBIENT SPL (dBA)	MAXIMUM SPL (dBA)	MINIMUM INTELLIGIBILITY (CIS)
FITNESS EQUIPMENT, STORAGE, SUPPLY ROOMS	30	40	0.75
OFFICES, CORRIDORS, RESTROOMS, ENTRY, ADMIN AREAS, KITCHEN, BREAK ROOMS	55	65	0.75
ELECTRICAL, COMM, UPS ROOMS	55	65	0.75
CONFERENCE, CLASSROOMS	60	70	0.75
MECHANICAL, TECHNICAL EQUIPMENT ROOMS	80	90	0.75

FIRE ALARM/MASS NOTIFICATION SYMBOLS

FACP	FIRE ALARM/MASS NOTIFICATION CONTROL PANEL
ANN	ANNUNCIATOR PANEL
AMP	AMPLIFIER PANEL
RPS	NOTIFICATION CIRCUIT POWER BOOSTER PANEL
LOC	LOCAL OPERATING CONSOLE
FAT	FIRE ALARM RADIO TRANSCEIVER PANEL
JPC	JOCKEY PUMP CONTROLLER
FPC	FIRE PUMP CONTROLLER
TXT	MASS NOTIFICATION EMERGENCY TEXTUAL DISPLAY
MNS	MASS NOTIFICATION SYSTEM PANEL
CARP	CLEAN AGENT RELEASE PANEL
PACP	PREACTION RELEASE PANEL
	CEILING-MOUNTED FIRE ALARM/MASS NOTIFICATION SPEAKER
	WALL-MOUNTED FIRE ALARM/MASS NOTIFICATION SPEAKER
	CEILING-MOUNTED FIRE ALARM SPEAKER/STROBE WITH CLEAR LENS AND WHITE FACEPLATE MARKED "FIRE"
	WALL-MOUNTED FIRE ALARM SPEAKER/STROBE WITH CLEAR LENS AND WHITE FACEPLATE MARKED "FIRE"
M WP	EXTERIOR MASS NOTIFICATION LOUDSPEAKER
P	MANUAL FIRE ALARM PULL STATION
	ADDRESSABLE HEAT DETECTOR
	PHOTOELECTRIC SMOKE DETECTOR
RS	ADDRESSABLE PHOTOELECTRIC RETURN/SUPPLY DUCT DETECTOR (SUPPLIED BY FIRE ALARM CONTRACTOR; INSTALLED BY MECHANICAL CONTRACTOR)
M	ADDRESSABLE INPUT MONITOR MODULE
C	ADDRESSABLE OUTPUT CONTROL MODULE
SPD	SURGE PROTECTIVE DEVICE
TS	VALVE TAMPER SWITCH
FS	WATER FLOW SWITCH - VANE TYPE
PS	WATER FLOW SWITCH - PRESSURE TYPE
H/L	HIGH/LOW AIR PRESSURE SWITCH
"WP"	DESIGNATES WEATHER PROOF DEVICE AND BACKBOX
	OMNI-DIRECTIONAL FIRE ALARM/MASS NOTIFICATION ANTENNA

DRAWING REFERENCE

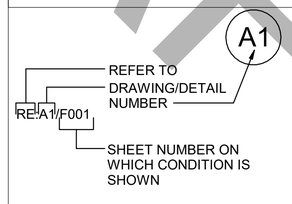

FIRE ALARM/MASS NOTIFICATION SYSTEM GENERAL NOTES

A. MODIFY EXISTING FIRE ALARM COVERAGE TO ACCOMMODATE NEW HVAC EQUIPMENT AND OTHER ADJUSTMENTS AS A RESULT OF THE THIS PROJECTS SCOPE OF WORK INCLUDING SMOKE DETECTION IN THE NEW CRAC UNITS. ADD NEW MASS NOTIFICATION TO EXISTING ADDRESSABLE FIRE ALARM SYSTEM FOR COMPLETE COVERAGE THROUGHOUT THE ENTIRE FACILITY. PERFORM ALL DESIGN AND INSTALLATION WORK IN ACCORDANCE WITH NFPA 72, UFC 3-600-01, UFC 4-021-01, AND PROJECT SPECFICATIONS.

B. REFER TO FIRE ALARM FLOOR PLAN FOR MAKE AND MODEL OF EXISTING EQUIPMENT. NEW DEVICES MUST BE COMPATIBLE WITH EXISTING SYSTEMS CURRENTLY IN PLACE.

C. RUN ALL WIRING IN MINIMUM 19 MM CONDUIT. EXCEPTION: 19 MM CONDUIT MAY BE USED FOR 120 VAC POWER FROM A CIRCUIT BREAKER PANEL TO THE FIRE ALARM/MASS NOTIFICATION SYSTEM.

D. INSTALL ALL WALL-MOUNTED NOTIFICATION DEVICES WITH THE BOTTOM OF THE STROBE LENS AT 2.03 METERS AFF, OR 150 MM BELOW THE CEILING, WHICHEVER IS LOWER.

E. PROVIDE POWER LIMITED CIRCUITS.

F. DO NOT LOCATE DETECTORS IN DIRECT AIR OR CLOSER THAN 910 MM FROM AN AIR SUPPLY OR RETURN DIFFUSER.

G. PROVIDE CONNECTIONS TO THE LIGHT AND POWER SERVICE IN ACCORDANCE WITH NFPA 72.

H. PROVIDE 18 AWG MINIMUM SIGNALING LINE CIRCUITS.

I. PROVIDE 16 AWG MINIMUM NOTIFICATION APPLIANCE CIRCUITS AND INITIATING DEVICE CIRCUITS.

J. PROVIDE CLASS B SIGNALING LINE CIRCUITS (SLC), INITIATING DEVICE CIRCUITS (IDC), AND NOTIFICATION APPLIANCE CIRCUITS (NAC).

K. PROVIDE STROBES AND SPEAKER/STROBES WITH WHITE FACEPLATES THROUGHOUT THE BUILDING. STROBES TO FEATURE CLEAR LENS AND BE MARKED WITH "ALERT". SPEAKERS ARE TO BE SHARED BY THE MASS NOTIFICATION SYSTEM AND FIRE ALARM SYSTEMS FOR AUDIBLE NOTIFICATION. PROVIDE ADDITIONAL SPEAKERS AND STROBES AS NECESSARY TO MEET THE AUDIBILITY AND INTELLIGIBILITY REQUIREMENTS OF NFPA 72 SECTION 18.4 AND UFC 4-021-01.

L. UPON ACTIVATION OF THE MASS NOTIFICATION SYSTEM, TEMPORARILY DEACTIVATE FIRE ALARM SYSTEM NOTIFICATION DEVICES DURING EMERGENCY VOICE MESSAGING. FIRE SIGNAL TRANSMISSION TO THE BASE REPORTING STATION IS TO REMAIN FUNCTIONAL. IF NOT MANUALLY ENDED, THE MASS NOTIFICATION SYSTEM MESSAGE WILL AUTOMATICALLY STOP AFTER 10 MINUTES. REACTIVATE THE FIRE ALARM AUDIBLES WHEN THE MESSAGE IS COMPLETED.

M. PROVIDE DUCT SMOKE DETECTION IN ALL SUPPLY DUCTS FOR AIR HANDLING UNITS GREATER THAN 944 L/S. PROVIDE DUCT SMOKE DETECTION ON RETURN AND SUPPLY SIDE OF AIR HANDLING UNITS OVER 7,079 L/S PER NFPA 90A AND UFC 3-600-01.

N. THE SOUND POWER OF AUDIBLE NOTIFICATION DEVICES SHALL BE 15 DBA OVER AMBIENT CONDITIONS OR 5 DBA ABOVE THE MAXIMUM SOUND LEVEL HAVING A DURATION OF AT LEAST 60 SECONDS WHICHEVER IS GREATER, MEASURED AT 1.5 METERS ABOVE THE FLOOR.

O. THESE DOCUMENTS DEPICT A PERFORMANCE LEVEL ENGINEERING DESIGN LAYOUT TO BE UTILIZED AS GUIDANCE FOR THE PLANNING OF THE FIRE ALARM AND MASS NOTIFICATION SYSTEM BY THE CONTRACTOR. PROVIDE COMPLETE DOCUMENTS FOR REVIEW AND APPROVAL FROM THE QFPE AND THE AUTHORITY HAVING JURISDICTION PRIOR TO INSTALLATION. INCLUDE SHOP DRAWINGS, CALCULATIONS, AND ANY ADDITIONAL EQUIPMENT NECESSARY, INCLUDING INITIATING DEVICES AND NOTIFICATION APPLIANCES, TO PROVIDE A COMPLETE INSTALLATION AND COMPLY WITH LOCAL CODES AND AMENDMENTS. PROVIDE COMPLETE VOLTAGE DROP AND BATTERY CALCULATIONS IN ACCORDANCE WITH NFPA 72. PROVIDE ADDITIONAL CIRCUITS AND/OR BATTERIES WHERE NECESSARY FOR COMPLIANCE WITH NFPA 72 AND THE SPECIFICATIONS.

MASS NOTIFICATION SYSTEM DESIGN CRITERIA

A. FIRE ALARM AUDIBLE NOTIFICATION MUST BE PROVIDED FOR ALL AREAS AND ROOMS THROUGHOUT THE BUILDING. PROVIDE SPEAKERS AND SPEAKER/STROBES AS NECESSARY TO MEET INTELLIGIBILITY REQUIREMENTS OF NFPA 72, UFC 4-021-01, AND THE FOLLOWING CRITERIA. THE CRITERIA MUST BE MET WITH ALL DOORS AND WINDOWS CLOSED. WHERE THE CRITERIA CANNOT BE MET DURING SYSTEM ACCEPTANCE TESTING, THE CONTRACTOR MUST PROVIDE ADDITIONAL DEVICES AS NECESSARY TO MEET THE CRITERIA AT NO ADDITIONAL COST.

B. ALL ROOMS MUST BE CONSIDERED NORMALLY OCCUPIED EXCEPT FOR STORAGE ROOMS, JANITORS CLOSET, ELECTRICAL ROOMS, COMMUNICATIONS EQUIPMENT ROOMS, AND OTHER SIMILAR UTILITY SPACES. IN NORMALLY OCCUPIED ROOMS OR AREAS, ENSURE A MINIMUM CIS VALUE OF 0.80 IS ACHIEVED. MEASUREMENTS MUST BE TAKEN AT HEAD LEVEL, APPROXIMATELY 1.5 METERS ABOVE THE FINISHED FLOOR IN THE MOST REMOTE PORTION OF THE ROOM.

C. NORMALLY UNOCCUPIED AREAS ARE PERMITTED TO HAVE A CIS SCORE LESS THAN THE MINIMUM REQUIRED, PROVIDED THAT OCCUPANTS TRAVEL NO MORE THAN 15 METERS TO FIND A LOCATION WITH AT LEAST THE MINIMUM REQUIRED VALUE.

D. WHERE OCCUPANTS ARE NORMALLY PRESENT, ENSURE A CIS SCORE GREATER THAN THE MINIMUM REQUIRED 0.80 CIS ACHIEVED. ROUNDING IS PERMITTED SUCH THAT A VALUE OF 0.75 MAY BE ROUNDED TO 0.8.

E. IN NORMALLY OCCUPIED ROOMS WITH HARD WALL AND CEILING SURFACES SUCH AS METAL OR CONCRETE, OCCUPANTS MAY TRAVEL NO MORE THAN 9.75 METERS TO FIND A LOCATION WITH AT LEAST THE MINIMUM REQUIRED CIS VALUE.

F. THE DISTANCE THE OCCUPANT MUST TRAVEL TO A LOCATION WITH THE MINIMUM REQUIRED CIS VALUE MUST BE ALONG THE CENTERLINE OF NATURAL PATH OF TRAVEL. MEASUREMENTS AROUND CORNERS OR OBSTRUCTIONS REQUIRE A MINIMUM OF 300 MM OF CLEARANCE. THE MEASURED DISTANCE MUST TERMINATE AT THE LOCATION WHERE THE MINIMUM REQUIRED CIS VALUE HAS BEEN ACHIEVED.

G. EXTERIOR MASS NOTIFICATION LOUDSPEAKERS MUST HAVE A MINIMUM CIS SCORE OF 0.80 MEASURED AT 5 METERS FROM THE SPEAKER.

H. STROBES ARE TO BE ACTIVATED IN CONJUNCTION WITH TRANSMISSION OF LIVE OR PRE-RECORDED MESSAGES. STROBES TO OPERATE FOR THE DURATION OF PRE-RECORDED MESSAGES AND NOT LESS THAN 15 SECONDS AFTER LIVE MESSAGES END.

I. THE SOUND POWER OF THE AUDIBLE NOTIFICATION MUST BE 15 DBA ABOVE THE AMBIENT CONDITIONS OR 5 DBA ABOVE THE MAXIMUM SOUND LEVEL. SOUND POWER MUST NOT EXCEED 100 DBA AT THE MOST REMOTE LOCATION OF THE ROOM AREA. REFER TO MANUFACTURER'S DATASHEET FOR SOUND DISTRIBUTION DIAGRAMS.

J. PROVIDE LOCAL OPERATING CONSOLES SO THAT OCCUPANTS NEED NOT TRAVEL GREATER THAN 200 FEET TO .

DRAFT

US Army Corps of Engineers
Japan District ®

FOR REVIEW ONLY
THESE DOCUMENTS ARE FOR CONCEPT DESIGN AND NOT INTENDED FOR CONSTRUCTION BIDDING OR PERMIT PURPOSES. THEY WERE PREPARED BY, OR UNDER SUPERVISION OF:
ALEX D SHEFFERMAN
NAME
147009 REGISTRATION # 04/28/2025 DATE
TEXAS REGISTERED ENGINEERING FIRM F-2966

MARK	DESCRIPTION	DATE

ISSUE DATE: 7/18/2025
SOLICITATION NO.:
CONTRACT NO.: W912HQ19D0007
DRAWING CODE:

DESIGNED BY: A.S.
DRAWN BY: E.F.
CHECKED BY: B.B.
SUBMITTED BY: A. GUERRA
SIZE: ISO A1
FILE NAME: FA001

US ARMY CORPS OF ENGINEERS
JAPAN ENGINEER DISTRICT
OKINAWA, JAPAN

Jacobs
JACOBS GOVERNMENT SERVICES COMPANY
777 MAIN STREET, FORT WORTH, TX 76102
USA

FY25 REPAIR HVAC WIDEBAND SATCOM OPS B100
CAMP BUCKNER COMMUNICATIONS ANNEX
OKINAWA, JAPAN
PROJECT NUMBER:D3449305

FIRE ALARM / MASS NOTIFICATION GENERAL NOTES

SHEET ID
FA001

FINAL DESIGN

F FA001-

FILE PATH: C:_Revit_Local_Models\2022\D3449305-F-3D_Estefania.Hinojosa.rvt
PLOT DATE: 7/18/2025 10:21:25 AM PLOTTED BY: PLOT SCALE: 1 : 1

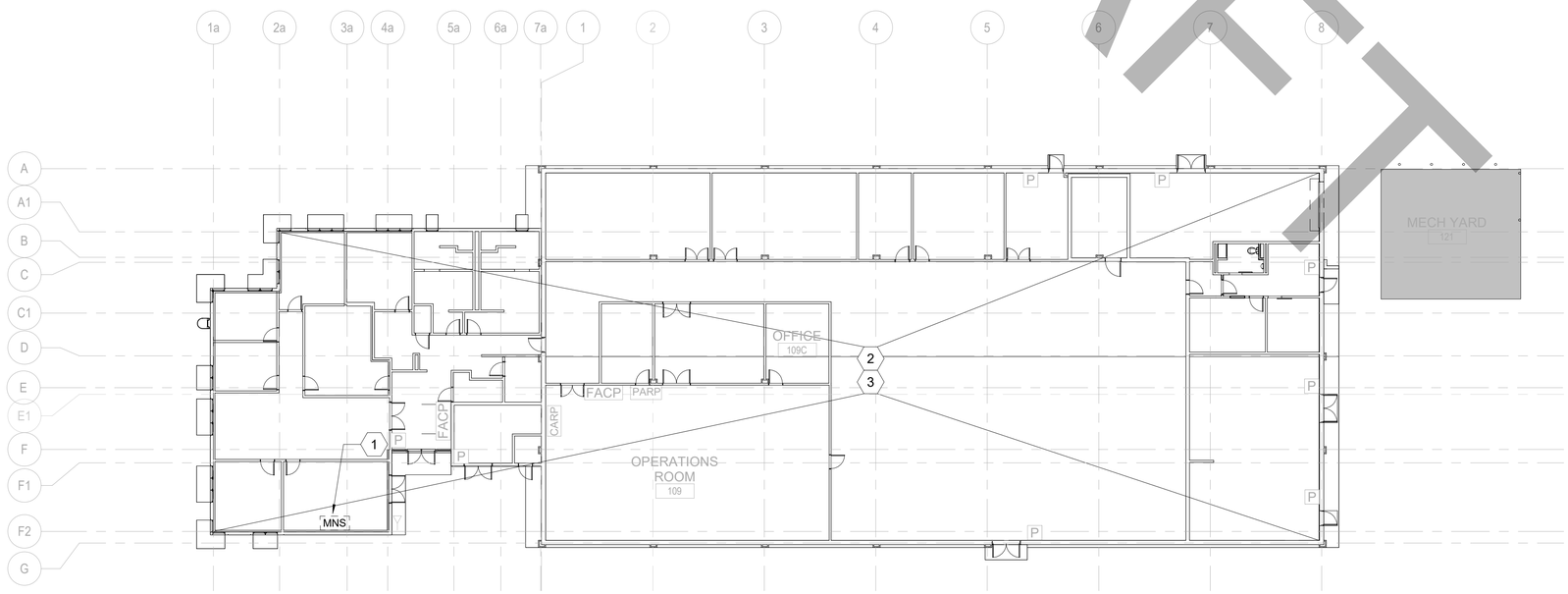

FIRE ALARM / MASS NOTIFICATION DEMOLITION PLAN

A1

1 : 200

GENERAL SHEET NOTES

A. REFER TO F-001 FOR GENERAL NOTES, SYMBOLS, AND ABBREVIATIONS.

B. REFER TO FD101 FOR FIRE ALARM/MASS NOTIFICATION DEMOLITION PLAN.

SHEET KEYNOTES

XX	
1	MNS PANEL TO BE DEMOLISHED.
2	EXISTING NOTIFICATION DEVICES TO BE DEMOLISED.
3	ALL EXISTING INITATING DEVICES TO REMAIN.

DEMOLITION LEGEND

	NOT IN RENOVATION SCOPE
DEVICE	EXISTING EQUIPMENT TO REMIAN
DEVICE	EQUIPMENT TO BE DEMOLISHED

KEY PLAN

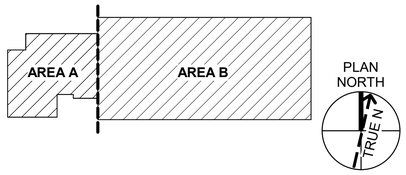

GRAPHIC SCALE(S)

0 4000 8000

SCALE: 1:200

DRAFT

US Army Corps of Engineers
Japan District ®

FOR REVIEW ONLY

THESE DOCUMENTS ARE FOR CONCEPT DESIGN AND NOT INTENDED FOR CONSTRUCTION, BIDDING OR PERMIT PURPOSES. THEY WERE PREPARED BY, OR UNDER SUPERVISION OF:

ALEX D SHEFFERMAN
NAME

147009 — REGISTRATION #
04/28/2025 — DATE

TEXAS REGISTERED ENGINEERING FIRM F-2966

MARK	DESCRIPTION	DATE

ISSUE DATE: 7/18/2025
SOLICITATION NO.:
CONTRACT NO.: W912HV19D0007
DRAWING CODE:

DESIGNED BY: A.S.
DRAWN BY: E.H.
CHECKED BY: B.B.
SUBMITTED BY: A. GUERRA
SIZE: ISO A1
FILE NAME: FD101

US ARMY CORPS OF ENGINEERS
JAPAN ENGINEER DISTRICT
OKINAWA, JAPAN

Jacobs
JACOBS GOVERNMENT SERVICES COMPANY
777 MAIN STREET, FT. WORTH, TX 76102
USA

FY25 REPAIR HVAC WIDEBAND SATCOM OPS B100
CAMP BUCKNER COMMUNICATIONS ANNEX
OKINAWA, JAPAN
PROJECT NUMBER:D3449305

FIRE ALARM / MASS NOTIFICATION DEMOLITION PLAN

SHEET ID

FD101

FINAL DESIGN

F FD101-

FILE PATH: C:_Revit_Local_Models\2022\D3449305-F-3D_Estefania.Hinojosa.rvt
PLOT DATE: 7/18/2025 10:21:28 AM PLOTTED BY: PLOT SCALE: As indicated

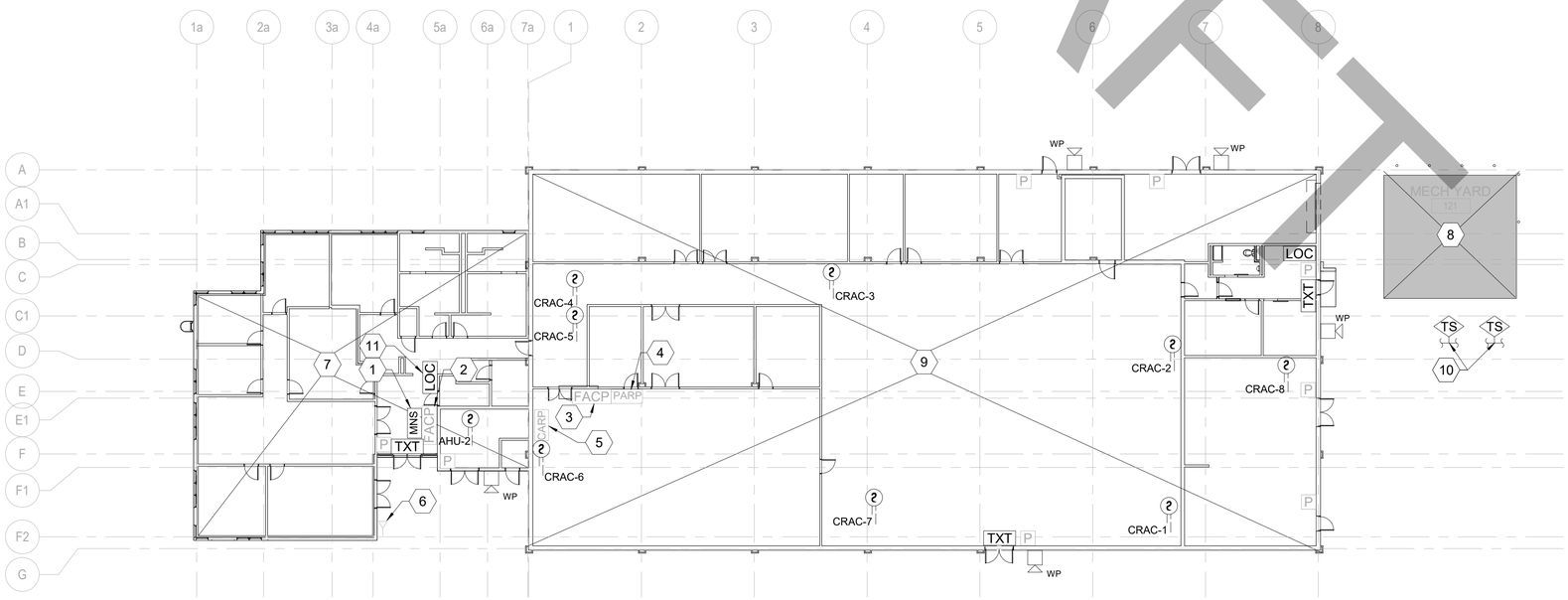

FIRE ALARM / MASS NOTIFICATION OVERALL PLAN

A1
FA101

1 : 200

GENERAL SHEET NOTES

A. REFER TO F-001 FOR GENERAL NOTES, SYMBOLS, AND ABBREVIATIONS.

B. REFER TO FD101 FOR FIRE ALARM/MASS NOTIFICATION DEMOLITION PLAN.

SHEET KEYNOTES

XX	
1	NEW MNS PANEL.
2	EXISTING FACP (MONACO M2) SERVING ADMIN AREA.
3	EXISTING FACP (FCI E3) SERVING TECHNICAL EQUIPMENT AREA.
4	EXISTING PREACTION RELEASE PANEL (VIKING VRF 400).
5	EXISTING FM200 RELEASE PANEL (AEGIS).
6	EXISTING MONACO ANTENNA.
7	ADMIN PANEL ZONE.
8	MECH YARD OPEN TO EXTERIOR, NO FIRE ALARM COVERAGE REQUIRED.
9	TECHNICAL PANEL ZONE.
10	PROVIDE TAMPER SWITCHES FOR CONTROL VALVES ON BACKFLOW PREVENTER ASSEMBLY. MONITOR TAMPER SWITCHES FROM EXISTING FIRE ALARM CONTROL PANEL.
11	LOCAL OPERATING CONSOLE WITH PUSH TO TALK MICROPHONE TO ALLOW BUILDING OCCUPANTS TO PROVIDE LIVE MESSAGING VIA THE MASS NOTIFICATION SYSTEM (TYPICAL).

FIRE ALARM LEGEND

	NOT IN RENOVATION SCOPE
DEVICE	EXISTING EQUIPMENT TO REMIAN
DEVICE	NEW EQUIPMENT

KEY PLAN

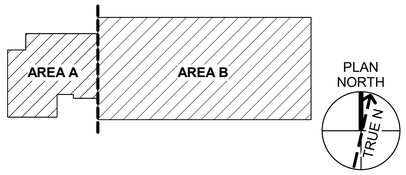

GRAPHIC SCALE(S)

0 4000 8000

SCALE: 1:200

US Army Corps of Engineers
Japan District ®

FOR REVIEW ONLY

THESE DOCUMENTS ARE FOR CONCEPT DESIGN AND NOT INTENDED FOR CONSTRUCTION, BIDDING OR PERMIT PURPOSES. THEY WERE PREPARED BY, OR UNDER SUPERVISION OF:

ALEX D SHEFFERMAN
NAME

147009 — REGISTRATION #
04/28/2025 — DATE

TEXAS REGISTERED ENGINEERING FIRM F-2966

MARK	DESCRIPTION	DATE

ISSUE DATE: 7/18/2025
SOLICITATION NO.:
CONTRACT NO.: W912HJ19D0007
DRAWING CODE:

DESIGNED BY: A.S.
DRAWN BY: E.F.
CHECKED BY: B.B.
SUBMITTED BY: A. GUERRA
SIZE: ISO A1
FILE NAME: FA101

US ARMY CORPS OF ENGINEERS
JAPAN ENGINEER DISTRICT
OKINAWA, JAPAN

Jacobs
JACOBS GOVERNMENT SERVICES COMPANY
777 MAIN STREET, FORT WORTH, TX 76102
USA

FY25 REPAIR HVAC WIDEBAND SATCOM OPS B100
CAMP BUCKNER COMMUNICATIONS ANNEX
OKINAWA, JAPAN
PROJECT NUMBER:D3449305

FIRE ALARM / MASS NOTIFICATION OVERALL PLAN

SHEET ID

FA101

F FA101-

FINAL DESIGN

FILE PATH: C:_Revit_Local_Models\2022\D3449305-F-3D_Estefania.Hinojosa.rvt
PLOT DATE: 7/18/2025 10:21:26 AM PLOTTED BY: PLOT SCALE: As indicated

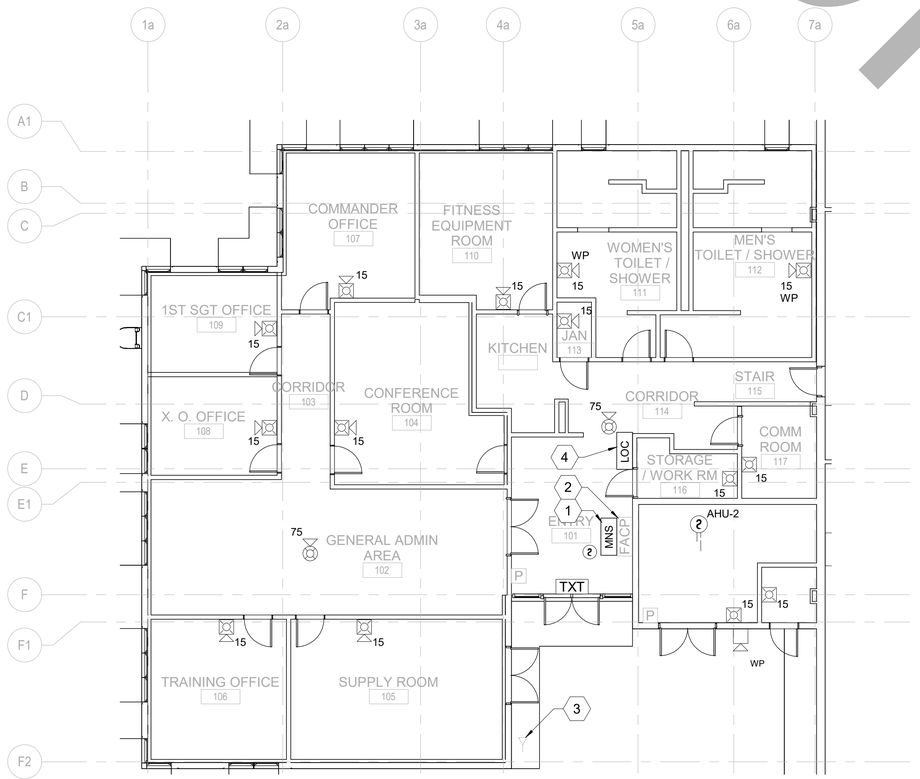

A1
FA102

FIRE ALARM / MASS NOTIFICATION - PARTIAL PLAN - AREA A

1 : 100

GENERAL SHEET NOTES

A. REFER TO F-001 FOR GENERAL NOTES, SYMBOLS, AND ABBREVIATIONS.

B. REFER TO FD101 FOR FIRE ALARM/MASS NOTIFICATION DEMOLITION PLAN.

SHEET KEYNOTES

XX	
1	NEW MNS PANEL.
2	EXISTING FACP (MONACO M2) SERVING ADMIN AREA.
3	EXISTING MONACO ANTENNA.
4	LOCAL OPERATING CONSOLE WITH PUSH TO TALK MICROPHONE TO ALLOW BUILDING OCCUPANTS TO PROVIDE LIVE MESSAGING VIA THE MASS NOTIFICATION SYSTEM.

FIRE ALARM LEGEND

	NOT IN RENOVATION SCOPE
DEVICE	EXISTING EQUIPMENT TO REMIAN
DEVICE	NEW EQUIPMENT

KEY PLAN

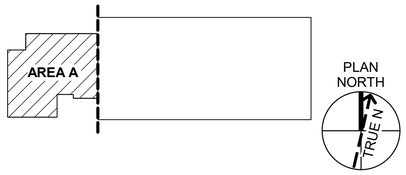

GRAPHIC SCALE(S)

0 2000 4000

SCALE: 1:100

DRAFT

US Army Corps of Engineers
Japan District ®

FOR REVIEW ONLY

THESE DOCUMENTS ARE FOR CONCEPT DESIGN AND NOT INTENDED FOR CONSTRUCTION, BIDDING OR PERMIT PURPOSES. THEY WERE PREPARED BY, OR UNDER SUPERVISION OF:

ALEX D SHEFFERMAN
NAME

147009 — REGISTRATION #
04/28/2025 — DATE

TEXAS REGISTERED ENGINEERING FIRM F-2966

MARK	DESCRIPTION	DATE

ISSUE DATE: 7/18/2025
SOLICITATION NO.:
CONTRACT NO.: W912HV19D0007
DRAWING CODE:

DESIGNED BY: S.B
DRAWN BY: R.H
CHECKED BY: B.B
SUBMITTED BY: A. GUERRA
SIZE: ISO A1
FILE NAME: FA102

US ARMY CORPS OF ENGINEERS
JAPAN ENGINEER DISTRICT
OKINAWA, JAPAN

Jacobs
JACOBS GOVERNMENT SERVICES COMPANY
777 MAIN STREET, FT. WORTH, TX 76102
USA

FY25 REPAIR HVAC WIDEBAND SATCOM OPS B100
CAMP BUCKNER COMMUNICATIONS ANNEX
OKINAWA, JAPAN
PROJECT NUMBER:D3449305

FIRE ALARM / MASS NOTIFICATION PARTIAL FLOOR PLAN - AREA A

SHEET ID
FA102

FINAL DESIGN

F FA102-

FILE PATH: C:_Revit_Local_Models\2022\D3449305-F-3D_Estefania.Hinojosa.rvt
PLOT DATE: 7/18/2025 10:21:27 AM PLOTTED BY: PLOT SCALE: As indicated

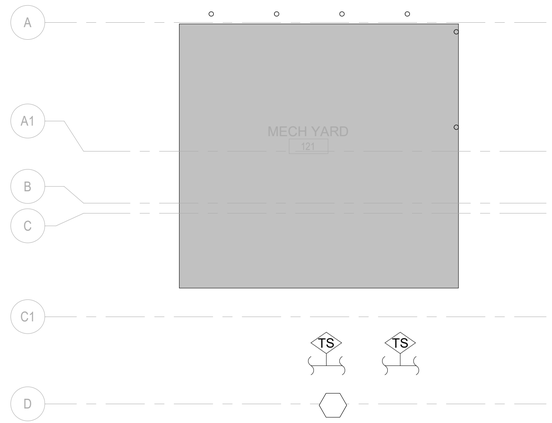

ENLARGED FIRE ALARM PLAN - MECHANICAL YARD

F1 / FA103

1 : 100

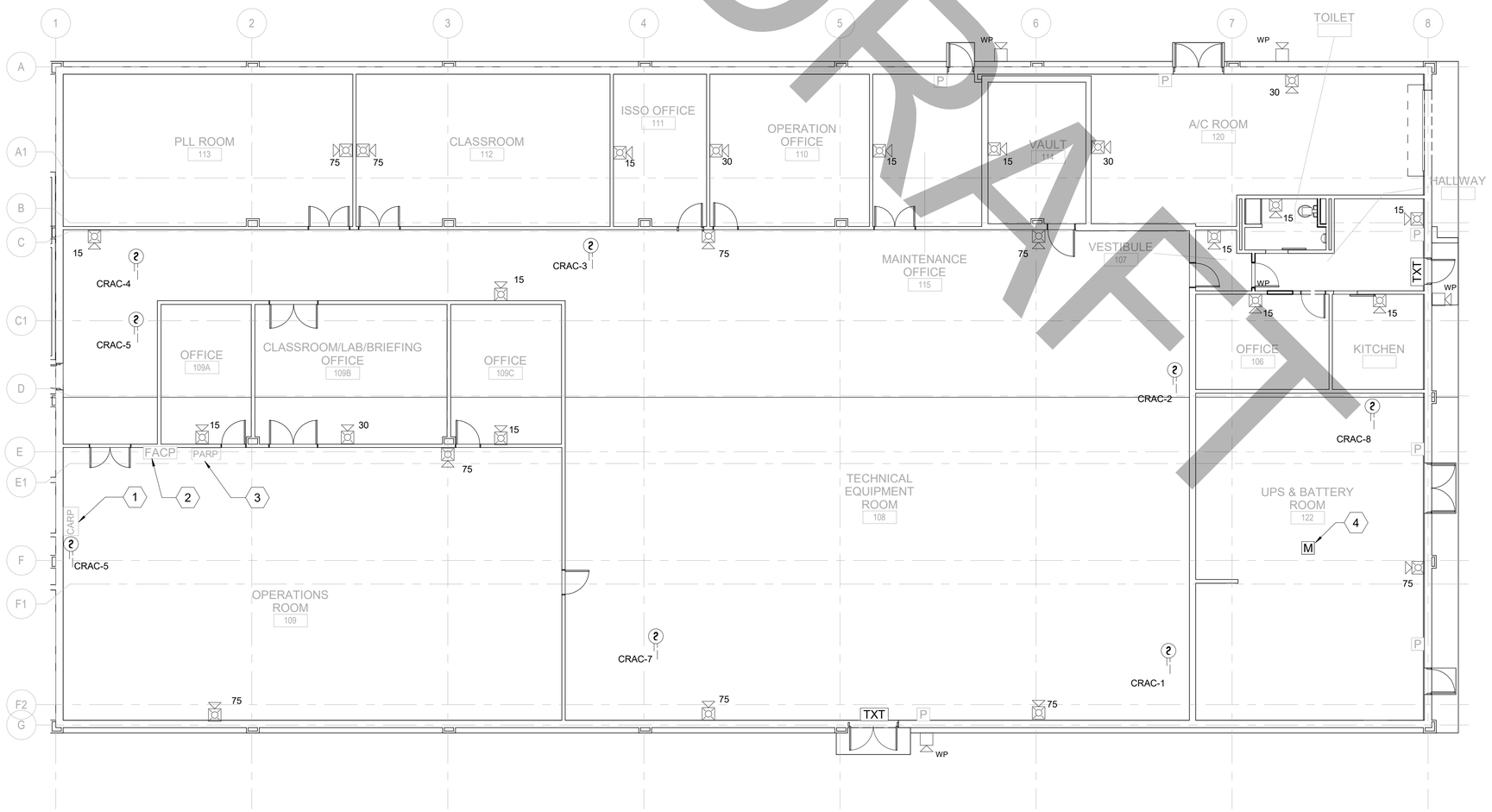

FIRE ALARM / MASS NOTIFICATION - PARTIAL PLAN - AREA B

A1 / FA103

1 : 100

GENERAL SHEET NOTES

A. REFER TO F-001 FOR GENERAL NOTES, SYMBOLS, AND ABBREVIATIONS.

B. REFER TO FD101 FOR FIRE ALARM/MASS NOTIFICATION DEMOLITION PLAN.

SHEET KEYNOTES

XX	
1	EXISTING FM200 RELEASE PANEL (AEGIS).
2	EXISTING FACP (FCI E3) SERVING TECHNICAL EQUIPMENT AREA.
3	EXISTING PREACTION RELEASE PANEL (VIKING VRF 400).
4	PROVIDE MONITOR MODULE FOR TROUBLE SIGNAL UPON HYDROGEN GAS DETECTION SYSTEM FAILURE. MODULE TO BE PROVIDED BY FIRE ALARM CONTRACTOR AND INSTALLED BY MECHANICAL CONTRACTOR.

FIRE ALARM LEGEND

	NOT IN RENOVATION SCOPE
DEVICE	EXISTING EQUIPMENT TO REMIAN
DEVICE	NEW EQUIPMENT

KEY PLAN

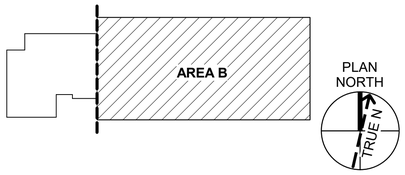

GRAPHIC SCALE(S)

0 2000 4000

SCALE: 1:100

US Army Corps of Engineers
Japan District ®

FOR REVIEW ONLY

THESE DOCUMENTS ARE FOR CONCEPT DESIGN AND NOT INTENDED FOR CONSTRUCTION, BIDDING OR PERMIT PURPOSES. THEY WERE PREPARED BY, OR UNDER SUPERVISION OF:

ALEX D SHEFFERMAN
NAME

147009 — REGISTRATION #
04/28/2025 — DATE

TEXAS REGISTERED ENGINEERING FIRM F-2966

MARK	DESCRIPTION	DATE

ISSUE DATE: 7/18/2025
SOLICITATION NO.: F-141
CONTRACT NO.: W912HV19D0007
DRAWING CODE: FD

DESIGNED BY: S.B
DRAWN BY: E.H
CHECKED BY: B.B
SUBMITTED BY: A. GUERRA
SIZE: ISO A1
FILE NAME: FA103

US ARMY CORPS OF ENGINEERS
JAPAN ENGINEER DISTRICT
OKINAWA, JAPAN

Jacobs
JACOBS GOVERNMENT SERVICES COMPANY
777 MAIN STREET, FT. WORTH, TX 76102
USA

FY25 REPAIR HVAC WIDEBAND SATCOM OPS B100
CAMP BUCKNER COMMUNICATIONS ANNEX
OKINAWA, JAPAN
PROJECT NUMBER:D3449305

FIRE ALARM / MASS NOTIFICATION PARTIAL FLOOR PLAN - AREA B

SHEET ID

FA103

FINAL DESIGN

F FA103-

FILE PATH: C:_Revit_Local_Models\2022\D3449305-F-3D_Estefania.Hinojosa.rvt
PLOT DATE: 7/18/2025 10:21:27 AM PLOTTED BY: PLOT SCALE: As indicated

SYSTEM OUTPUTS

		CONTROL UNIT ANNUNCIATION						NOTIFICATION							AUX FUNC.		FACP FUNC		
		ACTUATE COMMON ALARM SIGNAL INDICATOR AND AUDIBLE	DISPLAY ALARM DEVICE	ACTUATE COMMON TROUBLE SIGNAL INDICATOR AND AUDIBLE	DISPLAY TROUBLE CONDITION	ACTUATE SUPERVISORY SIGNAL INDICATOR AND AUDIBLE	DISPLAY SUPERVISORY CONDITION	TRANSMIT FIRE ALARM SIGNAL TO BASE REPORTING STATION	TRANSMIT TROUBLE SIGNAL TO BASE REPORTING STATION	TRANSMIT SUPERVISORY SIGNAL TO BASE REPORTING STATION	TRANSMIT MASS NOTIFICATION SYSTEM ACTIVE SIGNAL TO BASE REPORTING STATION	ACTUATE STROBES AND ASSOCIATED MESSAGE THROUGHOUT THE BUILDING*	LED TEXTUAL DISPLAY OF MESSAGE	ACTUATE FIRE ALARM SPEAKER/STROBE ON EXTERIOR OF FIRE PROTECTION EQUIPMENT ROOM	TRANSMIT SIGNAL TO SHUTDOWN ASSOCIATED HVAC UNIT	CRAC UNIT SHUT DOWN	ENERGIZE LIGHTS WITHIN THE MEANS OF EGRESS	SILENCE PANEL AND BUILDING FIRE ALARM AUDIBLE/VISUAL NOTIFICATION APPLIANCES STOP	CONTROL PANEL RETURNS TO NORMAL	
SYSTEM INPUT		A	B	C	D	E	F	G	H	I	J	K	L	M	N	O	P	Q	R	
ALARM DEVICES																				
1	SPRINKLER SYSTEM WATER FLOW SWITCH	●	●					●				●		●		●	●			1
2	MANUAL FIRE ALARM PULL STATION	●	●					●				●					●			2
3	SMOKE DETECTOR MOUNTED OVER FIRE ALARM CONTROL PANEL	●	●					●				●					●			3
4	PRE- ACTION SYSTEM PRESSURE SWITCH	●	●					●				●		●		●	●			4
5	CLEAN AGENT DISCHARGE	●	●					●				●		●		●	●			5
TROUBLE FUNCTIONS																				
6	FMCP COMMON TROUBLE			●	●				●											6
7	FIRE ALARM AC POWER FAILURE			●	●				●											7
8	FIRE ALARM SYSTEM LOW BATTERY			●	●				●											8
9	OPEN CIRCUIT			●	●				●											9
10	GROUND FAULT			●	●				●											10
11	NOTIFICATION APPLIANCE CIRCUIT SHORT			●	●				●											11
12	RELEASE PANEL TROUBLE			●	●				●											12
13	HYDROGEN GAS DETECTION SYSTEM FAILURE			●	●				●											13
SUPERVISORY DEVICES																				
14	FMCP COMMON SUPERVISORY					●	●			●										14
15	LOW AIR SUPERVISORY INPUT FOR PREACTION SYSTEM					●	●			●										15
16	EMERGENCY HVAC SHUT DOWN KEY					●	●			●					●	●				16
17	DUCT SMOKE DETECTOR					●	●			●					●	●				17
18	CONTROL VALVE TAMPER SWITCH ACTIVATED					●	●			●										18
19	RELEASE PANEL SUPERVISORY					●	●			●										19
PANEL FUNCTIONS																				
20	SYSTEM SILENCE																	●		20
21	SYSTEM RESET																		●	21
		A	B	C	D	E	F	G	H	I	J	K	L	M	N	O	P	Q	R	

*ACTIVATE MNS SPECIAL INSTRUCTIONS WITHIN 10 MINUTE TIMEOUT. STROBES TO REMAIN ACTIVE FOR AT LEAST 15 SECONDS AFTER LIVE MICROPHONE MESSAGES ARE COMPLETED.
*STROBES TO TERMINATE AFTER COMPLETION OF PRE-RECORDED MESSAGES.

A1 FA501

FIRE ALARM / MASS NOTIFICATION SEQUENCE OF OPERATIONS

N.T.S

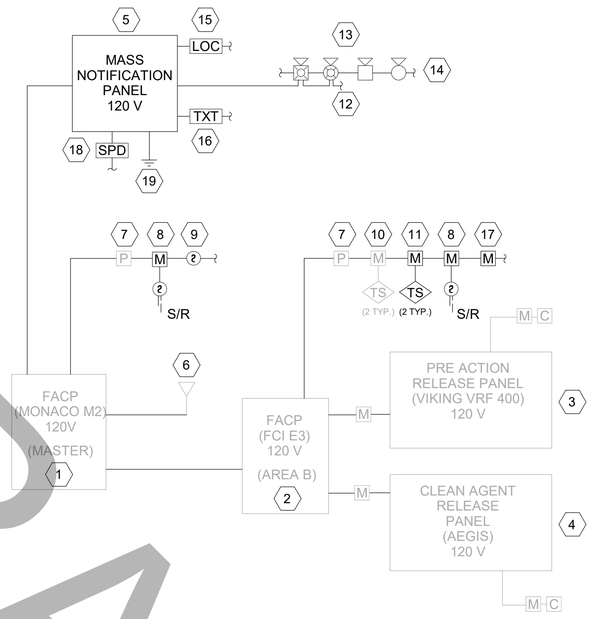

D5 FA501

FIRE ALARM/MASS NOTIFICATION RISER DIAGRAM

N.T.S

KEYNOTES (XX)

1. EXISTING MONACO M2 FIRE ALARM CONTROL PANEL SERVING THE ADMIN AREA TO REMAIN.
2. EXISTING FCI E3 FIRE ALARM CONTROL PANEL SERVING TECHNICAL EQUIPMENT AREA TO REMAIN.
3. EXISTING VIKING VRF 400 PRE-ACTION RELEASE PANEL SERVING PRE-ACTION SPRINKLER SYSTEMS IN THE TECHNICAL EQUIPMENT AREA TO REMAIN.
4. EXISTING AEGIS CLEAN AGENT RELEASE PANEL SERVING FM-200 SYSTEMS IN THE TECHNICAL EQUIPMENT AREA TO REMAIN.
5. PROVIDE NEW MASS NOTIFICATION PANEL COMPATIBLE WITH EXISTING MONACO M2 FIRE ALARM CONTROL PANEL. NEW MASS NOTIFICATION CONTROL PANEL TO SERVE NEW LOCAL OPERATING CONSOLE, SCROLLING TEXT SIGNS AND NOTIFICATION DEVICES.
6. EXISTING MONACO ANTENNA COMMUNICATING TO CENTRAL FIRE ALARM REPORTING STATION TO REMAIN.
7. EXISTING PULL STATIONS THROUGHOUT ENTIRE BUILDING TO REMAIN.
8. PROVIDE NEW DUCT SMOKE DETECTORS WITH MONITOR MODULE. COORDINATE WITH MECHANICAL DRAWINGS FOR EXACT LOCATIONS OF EQUIPMENT.
9. PROVIDE NEW PHOTOELECTRIC SMOKE DETECTOR ABOVE MASS NOTIFICATION PANEL.
10. EXISTING TAMPER SWITCHES SERVING AUTOMATIC SPRINKLER SYSTEM TO REMAIN.
11. PROVIDE NEW TAMPER SWITCHES ON BACKFLOW PREVENTER ASSEMBLY.
12. PROVIDE NEW NOTIFICATION DEVICES AS INDICATED ON THE DRAWINGS SUCH THAT VOLTAGE DROP DOES NOT EXCEED THE MAXIMUM ALLOWED BY THE MANUFACTURER PER CIRCUIT. ADDITIONAL NOTIFICATION CIRCUITS AND ADDITIONAL POWER SUPPLIES MAY BE REQUIRED DEPENDING ON EQUIPMENT PROVIDED.
13. PROVIDE ADDITIONAL AUDIBLE/VISIBLE NOTIFICATION APPLIANCES AND ASSOCIATED POWER SUPPLIES AND/OR TRANSPONDERS AS NECESSARY TO MEET THE AUDIBILITY, INTELLIGIBILITY, AND VISIBILITY REQUIREMENTS SUCH THAT THE VOLTAGE DROP DOES NOT EXCEED THE MAXIMUM ALLOWED BY THE MANUFACTURER PER CIRCUIT LIMIT PER NFPA 72.
14. CLASS B NOTIFICATION APPLIANCE CIRCUIT WITH END-OF-LINE RESISTOR.
15. PROVIDE NEW LOCAL OPERATING CONSOLE WITH PUSH TO TALK MICROPHONE TO ALLOW BUILDING OCCUPANTS TO PROVIDE LIVE MESSAGING VIA THE MASS NOTIFICATION SYSTEM.
16. PROVIDE NEW SCROLLING TEXT SIGNS TO PROVIDE MESSAGING TO OCCUPANTS VIA THE MASS NOTIFICATION SYSTEM.
17. PROVIDE MONITOR MODULE FOR TROUBLE SIGNAL UPON HYDROGEN GAS DETECTION SYSTEM FAILURE. MODULE TO BE PROVIDED BY FIRE ALARM CONTRACTOR AND INSTALLED BY MECHANICAL CONTRACTOR.
18. SURGE PROTECTION DEVICE.
19. GROUND PER NFPA 70.

DRAFT

US Army Corps of Engineers
Japan District ®

FOR REVIEW ONLY
THESE DOCUMENTS ARE FOR CONCEPT DESIGN AND NOT INTENDED FOR CONSTRUCTION, BIDDING OR PERMIT PURPOSES. THEY WERE PREPARED BY, OR UNDER SUPERVISION OF:
ALEX D SHEFFERMAN
NAME
147009 — REGISTRATION #
04/28/2025 — DATE
TEXAS REGISTERED ENGINEERING FIRM F-2966

MARK	DESCRIPTION	DATE

ISSUE DATE: 7/18/2025
SOLICITATION NO.:
CONTRACT NO.: W912HQ19D0007
DRAWING CODE:
DESIGNED BY: A.S.
DRAWN BY: E.M.
CHECKED BY: B.B.
SUBMITTED BY: A. GUERRA
SIZE: ISO A1
FILE NAME: FA501

US ARMY CORPS OF ENGINEERS
JAPAN ENGINEER DISTRICT
OKINAWA, JAPAN

Jacobs
JACOBS GOVERNMENT SERVICES COMPANY
777 MAIN STREET, FORT WORTH, TX 76102 USA

FY25 REPAIR HVAC WIDEBAND SATCOM OPS B100
CAMP BUCKNER COMMUNICATIONS ANNEX
OKINAWA, JAPAN
PROJECT NUMBER:D3449305

FIRE ALARM / MASS NOTIFICATION DETAILS

SHEET ID
FA501

FINAL DESIGN

F FA501-

FILE PATH: C:_Revit_Local_Models\2022\D3449305-F-3D_Estefania.Hinojosa.rvt
PLOT DATE: 7/18/2025 10:21:28 AM PLOTTED BY: PLOT SCALE: N.T.S

DRAWING ABBREVIATIONS

A	----------
AC	AIR CONDITIONER (EXISTING)
AD	AIR DEVICE
AFF	ABOVE FINISHED FLOOR
AFG	ABOVE FINISHED GRADE
AHU	AIR HANDLING UNIT
AL	ACOUSTICAL LINING
AS	AIR SEPARATOR
B	----------
BSB	BRANCH SELECTOR BOX
BOD	BOTTOM OF DUCT
BOP	BOTTOM OF PIPE
C	----------
C	CONDENSATE
CD	CONDENSER
CF	BYPASS CHEMICAL FEEDER
CH	CHILLER
CHR	CHILLED WATER RETURN
CHS	CHILLED WATER SUPPLY
CO	CLEAN OUT
CR	CONDENSATE RETURN (STEAM)
CRAC	COMPUTER ROOM AIR CONDITIONER
CU	CONDENSING UNIT
CWR	CONDENSER WATER RETURN
CWS	CONDENSER WATER SUPPLY
D	----------
DB	DRY BULB
DOAU	DEDICATED OUTDOOR AIR UNIT
DX	DIRECT EXPANSION
DP	DEW POINT
E	----------
EA	EXHAUST AIR
EF	EXHAUST FAN
ERP	ENERGY RECOVER PUMP
ERR	ENERGY RECOVERY WATER RETURN
ERS	ENERGY RECOVERY WATER SUPPLY
ERV	ENERGY RECOVERY VENTILATOR
ET	EXPANSION TANK
F	----------
FC	FLEXIBLE CONNECTION
FCU	FAN COIL UNIT
FD	FIRE DAMPER
FO	FAIL OPEN
FPM	FEET PER MINUTE
FPVAV	FAN POWERED VAV
G	----------
GF	GLYCOL FEEDER
GFGI	GOVERNMENT FURNISH, GOVERNMENT INSTALLED
GH	GRAVITY HOOD
GR	GLYCOL RETURN
GRV	GRAVITY ROOF VENTILATOR
GS	GLYCOL SUPPLY
H	----------
HC	HEATING COIL
HP	HEAT PUMP
HPS	HIGH PRESSURE STEAM
HVLS	HIGH VOLUME LOW SPEED
HVU	HEAT AND VENT UNIT
HWR	HOT WATER RETURN
HWS	HOT WATER SUPPLY
HX	HEAT EXCHANGER
I	----------
IHP	INVERTER HEAT PUMP
IRH	INFRARED RADIANT HEATER
L	----------
LA	LEAKAGE AIR
LPS	LOW PRESSURE STEAM
LV	LOUVER
LEL	LOWER EXPLOSIVE LIMIT
M	----------
MAU	MAKE-UP AIR UNIT
MD	MOTORIZED DAMPER
MPS	MEDIUM PRESSURE STEAM
N	----------
NTS	NOT TO SCALE
O	----------
OA	OUTDOOR AIR
P	----------
P	PUMP
PEL	PERMISSIBLE EXPOSURE LIMIT
R	----------
RA	RETURN AIR
RH	RELATIVE HUMIDITY
RM	RADIANT MANIFOLD
RTU	ROOF TOP UNIT
S	----------
SA	SUPPLY AIR
SCHP	SECONDARY CHILLED WATER PUMP
SHWP	SECONDARY HOT WATER PUMP
SM	SNOW MELT MANIFOLD
U	----------
UH	UNIT HEATER
V	----------
VAV	VARIABLE AIR VOLUME
VD	VOLUME DAMPER
VRF	VARIABLE REFRIGERANT FLOW
VOC	VOLITLE ORGANIC COMPOUND
VP	VACUUM PUMP
W	----------
WB	WET BULB
Z	----------
ZSB	ZONE SELECTOR BOX

DRAWING/DETAIL REFERENCE KEY

RE : 2 / M-201

REFER TO
DRAWING/DETAIL NUMBER
SHEET NUMBER ON WHICH DETAIL IS DRAWN

2
M-201

PIPING LABELS

CHS	CHILLED WATER SUPPLY
CHR	CHILLED WATER RETURN
CWS	CONDENSER WATER SUPPLY
CWR	CONDENSER WATER RETURN
HWS	HEATING WATER SUPPLY
HWR	HEATING WATER RETURN
CD	CONDENSATE DRAIN
D	DRAIN
STM	STEAM SUPPLY
STM	STEAM RETURN
MU	MAKE-UP WATER
RL	REFRIGERANT LIQUID
RS	REFRIGERANT SUCTION
PD	PUMP DISCHARGE

LEGEND

DUCTWORK SYMBOLS

- XX/XX — DUCT WITH ACOUSTICAL LINING
- MANUAL VOLUME DAMPER (SEE BELOW FOR OTHER TYPES)
- DAMPER TYPE: FD - FIRE DAMPER; SD - SMOKE DAMPER; FSD - COMBINATION FIRE/SMOKE DAMPER; BD - GRAVITY BACKDRAFT DAMPER; CD - CONTROL DAMPER; *NO MARK INDICATES MANUAL VOLUME DAMPER
- VERTICAL DAMPER IN DUCT (OR OPENING) AT FIRE-RATED PARTITION
- HORIZONTAL FIRE DAMPER AT FLOOR PENETRATION
- CONNECT NEW DUCT TO EXISTING
- VANED ELBOW (PROVIDE VANES IN ALL SQUARE OR RECTANGULAR ELBOWS, UNLESS NOTED OTHERWISE)
- FAN POWERED TERMINAL UNIT
- TYPICAL SUPPLY AIR TEE WITH SPLITTER DAMPER
- STANDARD ROUND BRANCH DUCT (SPIN-IN)
- STANDARD ROUND BRANCH DUCT (CONICAL)
- STANDARD RECTANGULAR BRANCH DUCT (45° TAKE-OFF)
- STANDARD CONCENTRIC DUCT TRANSITION
- STANDARD ECCENTRIC DUCT TRANSITION
- RECTANGULAR-TO-ROUND DUCT TRANSITION
- SECTION THROUGH ROUND DUCT, SUPPLY OR EXHAUST AS NOTED
- SECTION THROUGH RECTANGULAR SUPPLY DUCT
- SECTION THROUGH RECTANGULAR RETURN DUCT
- SECTION THROUGH RECTANGULAR EXHAUST DUCT
- A.D. — ACCESS DOOR IN CEILING
- A.D. — DUCT ACCESS DOOR
- CEILING SUPPLY AIR DIFFUSER, ARROWS INDICATE PATTERN. NO PATTERN SHOWN EQUALS 4-WAY
- CEILING RETURN AIR GRILLE OR RETURN REGISTER
- CEILING EXHAUST AIR GRILLE OR EXHAUST REGISTER
- SIDEWALL SUPPLY OR RETURN REGISTER OR GRILLE
- SUPPLY OR OUTSIDE AIR DUCT UP
- SUPPLY OR OUTSIDE AIR DUCT DOWN
- RETURN AIR DUCT UP
- RETURN AIR DUCT DOWN
- RELIEF OR EXHAUST AIR DUCT UP
- RELIEF OR EXHAUST AIR DUCT DOWN
- IN-LINE 90 DEGREE DROP (RISE) IN DUCT
- UP — INCLINE RISE IN DUCT
- DOWN — INCLINE DROP IN DUCT
- VAV TERMINAL UNIT
- FLEXIBLE DUCT, SIZE AS SHOWN

PIPING SYMBOLS

- PITCH DOWN IN DIRECTION OF ARROW
- DIRECTION OF FLOW
- PIPE ANCHOR
- PIPE GUIDE
- CONCENTRIC REDUCER
- ECCENTRIC REDUCER
- STRAINER WITH BLOWDOWN VALVE
- BRANCH - SIDE CONNECTION
- BRANCH - TOP CONNECTION
- BRANCH - BOTTOM CONNECTION
- RISE OR DROP IN PIPE
- RISER DOWN (ELBOW)
- RISER UP (ELBOW)
- CAPPED PIPE
- BLIND FLANGE
- UNION (SCREWED)
- PUMP
- FLANGED CONNECTION
- TEMPERATURE & PRESSURE PORT
- FLEX PIPE
- FLEX CONNECTION
- BELLOWS CONNECTION (DOUBLE SPHERE NEOPRENE TYPE)
- THERMOMETER
- PRESSURE GAGE WITH COCK
- PS — PRESSURE SWITCH
- FS — FLOW SWITCH
- MANUAL AIR VENT
- AUTOMATIC AIR VENT
- WELDED CONNECTION
- FLANGED CONNECTION
- SOLDERED CONNECTION
- THREADED OR "PRESS" CONNECTION
- BELL & SPIGOT CONNECTION
- SOLVENT CONNECTION

EQUIPMENT SYMBOLS

- NEW EQUIPMENT
- EQUIPMENT CLEARANCE

MISCELLANEOUS

- 001 — KEYNOTE
- 001 — DEMOLITION KEYNOTE
- POINT OF CONNECTION - NEW TO EXISTING
- POINT OF DEMOLITION
- TO BE DEMOLISHED

CONTROLS SYMBOLS

- T — ROOM THERMOSTAT
- H — ROOM HUMIDISTAT
- T — TEMPERATURE SENSOR/TRANSMITTER
- HY — HYDROGEN SENSOR/TRANSMITTER
- S — DUCT SMOKE DETECTOR
- R — RELAY
- ST — SLAB SENSOR
- EMERGENCY AIR DISTRIBUTION SHUTOFF
- HT — DUCT HUMIDITY SENSOR/TRANSMITTER
- PT — PRESSURE TRANSMITTER
- MOTOR STARTER (LOCAL OR MCC)
- SP — STATIC PRESSURE SENSOR/TRANSMITTER
- DT — DIFFERENTIAL PRESSURE SENSOR/TRANSMITTER
- DP — DIFFERENTIAL PRESSURE SWITCH (DIGITAL)
- T — DUCT AVERAGING TEMPERATURE ELEMENT
- F — FLOW SENSOR
- FR — FREEZESTAT
- FS — FLOW SWITCH
- M — ELECTRIC MOTOR
- RS — REFRIGERANT SENSOR
- LIQUID FLOW METER
- RECEIVER PRESSURE GAUGE (PANEL MTD.)
- CT — CURRENT SENSING RELAY
- DA — ELECTRIC DAMPER ACTUATOR
- CD — CARBON DIOXIDE (CO2) SENSOR
- CM — CARBON MONOXIDE (CO) SENSOR
- F — FIRESTAT
- HS — MANUALLY ACTIVATED SWITCH (PULL STAT., PUSH STAT., ETC)
- AQ — AQUASTAT
- LWCO — LOW WATER CUTOFF

CONTROL VALVE SYMBOLS:

- M — ELECTRIC ACTUATOR
- S — SOLENOID ACTUATOR

CONTROL DEFINITIONS:

NORMAL POSITION: INDICATES DEVICE POSITION WHEN THE SYSTEM IS DISABLED OR NOT ENERGIZED

FAIL POSITION: INDICATES DEVICE POSITION WHEN THE CONTROL SIGNAL IS LOST OR UPON A LOSS OF POWER.

NO - NORMALLY OPEN
NC - NORMALLY CLOSED
FO - FAIL OPEN
FC - FAIL CLOSED

NORMAL OPEN	NORMAL CLOSED	
		GATE VALVE
		VALVE W/ REDUCERS (GATE VALVE SHOWN)
		GLOBE VALVE
		BUTTERFLY VALVE
		NEEDLE VALVE/ INSTRUMENT VALVE
		3-WAY VALVE
		BALL VALVE
		PLUG VALVE
		ANGLE VALVE

EQUIPMENT TAG SYMBOLS

AIR DEVICE TAG

AD - X | 380
- TAG
- MAXIMUM AIRFLOW (L/S)

300/150 — INDICATES A 300mmx150mm RECTANGULAR DUCT (NET FREE AREA)

200ø — INDICATES A 200mm ROUND DUCT (NET FREE AREA)

VALVE SYMBOLS

- GATE VALVE
- GLOBE VALVE
- CHECK VALVE (NON SLAM)
- PLUG VALVE
- PRESSURE REDUCING VALVE (PRV)
- BUTTERFLY VALVE
- BALL VALVE
- NEEDLE VALVE
- VENTURI FLOW METER
- VALVE IN DROP
- VALVE IN CENTER DROP
- VALVE IN RISE
- S — SOLENOID VALVE
- GATE VALVE W/ 3/4" HOSE THREAD ADAPTER
- TWO-WAY CONTROL VALVE
- THREE-WAY CONTROL VALVE
- SAFETY VALVE OR PRESSURE RELIEF VALVE
- MANUAL BALANCING VALVE
- AUTOMATIC BALANCING VALVE
- TEMPERATURE WELL
- FLANGED VALVE (GATE VALVE SHOWN)
- P — PRESSURE INDEP. CONTROL VALVE (PICV)

HVAC DESIGN CRITERIA

PROJECT: SATCOM OPS B100 HVAC REPAIR

DESIGN CONDITIONS PER UFC 3-420-01, 3-410-01

WEATHER STATION - KADENA AFB, OKINAWA
STATION #: 479310
ELEVATION: 48 METERS; LATITUDE: 26.35°N; LONGITUDE: 127.77°W
ASHRAE CLIMATE ZONE 2A

WINTER: 10.2°C DRY BULB (99%)

SUMMER: DRY BULB CONDITIONS: 33.1°C DRY BULB (1%) 26.9°C MEAN COINCIDENT WET BULB
DEHUMIDIFICATION: 29.9°C MEAN COINCIDENT DRY BULB 29.1°C DEW POINT

INDOOR DESIGN CONDITIONS

WINTER: 20°C DB (OFFICE/ADMIN AREAS)
22.2°C DB & 50%RH (OPERATIONS ROOM, COMM, TELEPHONE, NETWORK EQUIP)
20°C DB & 50%RH (UPS)

SUMMER: 25.5°C DB/12.8°C WB(OFFICE/ADMIN AREAS)
22.2°C DB & 50%RH (OPERATIONS ROOM, COMM, TELEPHONE, NETWORK EQUIP)
20°C DB & 50%RH (UPS)

CODE COMPLIANCE
THE MECHANICAL AND PLUMBING EQUIPMENT IN THESE DRAWINGS ARE IN COMPLIANCE WITH 2024 INTERNATIONAL MECHANICAL CODE AS MODIFIED BY UFC 3-410-01.

ENERGY CODE COMPLIANCE
THE MECHANICAL AND PLUMBING EQUIPMENT IN THESE DRAWINGS ARE IN COMPLIANCE WITH ASHRAE 90.1-2019 AND UFC 1-200-02. THE HVAC LOADS WERE PERFORMED IN ACCORDANCE WITH ASHRAE FUNDAMENTALS. ENERGY CALCULATIONS WERE PERFORMED IN ACCORDANCE WITH ASHRAE 90.1-2019.

GENERAL NOTES

A. REFER TO GENERAL SHEETS FOR PHASING PLAN
B. REFER TO SPECIFICATIONS FOR MATERIALS AND METHODS FOR CONSTRUCTION.
C. COORDINATE LOCATION OF ALL PENETRATIONS WITH THE BUILDING STRUCTURE.
D. COORDINATE ALL SLAB PENETRATIONS AND SLEEVES PRIOR TO EACH CONCRETE POUR.
E. COORDINATE UNDERGROUND SITE PIPING AND TRENCH WITH SITE CIVIL INCLUDING FOUNDATIONS, SWALES, RETAINING WALLS, AND ANY OTHER POTENTIAL OBSTRUCTION.
F. PERFORM WORK IN ACCORDANCE WITH THE LATEST EDITIONS, REVISIONS, AMENDMENTS OR SUPPLEMENTS OF APPLICABLE STATUTES, ORDINANCES, CODES, OR REGULATIONS OF FEDERAL, STATE AND LOCAL AUTHORITIES HAVING JURISDICTION IN EFFECT WHEN RFP WAS ISSUED.
G. WHERE APPROVAL CODES HAVE BEEN ESTABLISHED BY OSHA, UNDERWRITERS LABORATORY, AMERICAN CODES, ANSI, ASME, ABAAG, ASHRAE, ASTM, ARI, NEC, NFPA, SMACNA, FOLLOW THESE STANDARDS WHETHER OR NOT INDICATED ON THE DRAWINGS.
H. COORDINATE WORK WITH ARCHITECTURAL FEATURES AND COORDINATE WORK SUCH THAT INTERFERENCES BETWEEN PIPING, DUCTWORK, EQUIPMENT, PLUMBING WORK, ELECTRICAL WORK, AND BUILDING STRUCTURE WILL BE AVOIDED.
I. PROVIDE THE ENTIRE SYSTEM AND ITS COMPONENT ITEMS OF EQUIPMENT IN OPERATING CONDITION WITHOUT OBJECTIONABLE VIBRATION OR NOISE IN ACCORDANCE WITH UFC-3-450-01 AND ASHRAE APPLICATIONS HANDBOOK .
J. PROVIDE ALL WIRING AND ELECTRICAL CONTROLS IN ACCORDANCE WITH NFPA 70 (NEC).
K. DO NOT SCALE THESE DRAWINGS FOR CONSTRUCTION PURPOSES.
L. REFER TO STRUCTURAL DRAWINGS FOR FRAMING REQUIRED AROUND PIPES PENETRATING WALLS AND FLOORS.
M. CONTRACTORS ARE FREE TO USE ANY PRODUCT WHICH MEETS THE GOVERNMENT'S MINIMUM REQUIREMENTS AND IS NOT IN CONFLICT WITH OTHER CONTRACT PROVISIONS. UNLESS INDICATED OTHERWISE ON THE PLANS OR SPECIFICATIONS (E.G. SOLE-SOURCE), ALL LISTED MANUFACTURERS ARE THE BASIS OF DESIGN. FOR THESE BASIS OF DESIGN PRODUCTS, OTHER MANUFACTURERS MAY BE SUBSTITUTED AS LONG AS THE STANDARD OF QUALITY AND CHARACTERISTICS OF THE SUBSTITUTED MANUFACTURER MEET OR EXCEED THE STANDARD OF QUALITY AND CHARACTERISTICS OF THE BASIS OF DESIGN.
N. ALL DUCTWORK SIZES ARE FREE AIR DIMENSIONS.
R. PROVIDE PLENUM RATED CABLE, DEVICES, PIPING, ETC. IN PLENUM SPACE.
S. PROVIDE TEMPORARY 30% EFFICIENT, 50MM THICK FILTERS OVER RETURN AIR OPENINGS OF ANY AHU'S WHICH ARE PLACED IN SERVICE PRIOR TO COMPLETION OF CONSTRUCTION. REMOVE FILTERS FOR TEST & BALANCE.
T. PROVIDE ACCESS PANELS FOR ALL DAMPER ACTUATORS AND MOTORS LOCATED INSIDE DUCT OR FAN HOUSING.
U. COORDINATE LOCATION OF THERMOSTATS AND HUMIDITY SENSORS WITH FURNITURE, FIXTURES, AND EQUIPMENT PLANS.

US Army Corps of Engineers
Japan District ®

FOR REVIEW ONLY
THESE DOCUMENTS ARE FOR CONCEPT DESIGN AND NOT INTENDED FOR CONSTRUCTION BIDDING OR PERMIT PURPOSES. THEY WERE PREPARED BY, OR UNDER SUPERVISION OF:
BRIAN C. ALLERHEILIGEN
NAME
93876 — REGISTRATION #
09/04/2025 — DATE
TEXAS REGISTERED ENGINEERING FIRM F-2966

MARK	DESCRIPTION	DATE

ISSUE DATE: 09/04/2025
SOLICITATION NO.:
CONTRACT NO.:
DRAWING CODE:
DESIGNED BY: K. WILKINS
DRAWN BY: J. LAWRENCE
CHECKED BY: B. SCHNEIDER
SUBMITTED BY: A. GUERRA
SIZE: ISO A1
FILE NAME: M-001

US ARMY CORPS OF ENGINEERS
JAPAN ENGINEER DISTRICT
OKINAWA, JAPAN

Jacobs
JACOBS GOVERNMENT SERVICES COMPANY
777 MAIN STREET, FORT WORTH, TX 76102 USA

FY25 REPAIR HVAC WIDEBAND SATCOM OPS B100
CAMP BUCKNER COMMUNICATIONS ANNEX
OKINAWA, JAPAN
PROJECT NUMBER:D3449305

MECHANICAL GENERAL NOTES

SHEET ID
M-001

DRAFT

M M-001-

FILE PATH: C:\Users\MOHAPPC\Documents\D3449305-M-3D_MOHAPPC.rvt
PLOT DATE: 8/29/2025 3:10:44 PM PLOTTED BY: PLOT SCALE: 1 : 48

BACKCHECK SUBMITTAL DESIGN

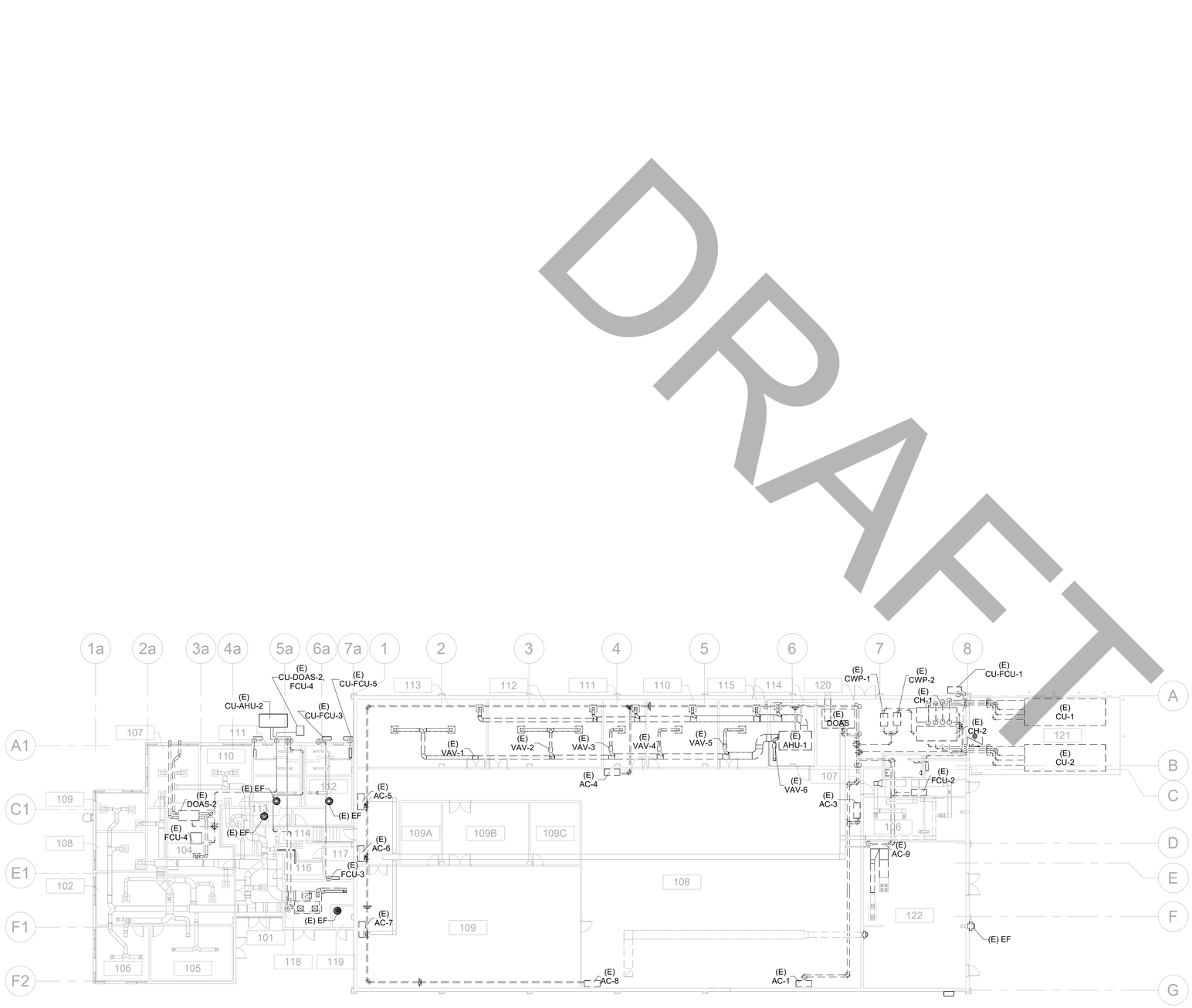

A1 OVERALL DEMOLITION HVAC PLAN
1 : 200

GENERAL SHEET NOTES

A	ORIGINAL AIR FLOWS FOR EXISTING AIR DEVICES SHOWN. SYSTEM TO BE FULLY TESTED AND BALANCED PRIOR TO DEMOLITION. SUBMIT TAB REPORT TO GOVERNMENT.
B	REFER TO SHEET GI010 AND GI011 FOR PHASING PLAN.
C	EXISTING CEILING TO REMAIN, WITH PORTIONS REMOVED AS NECESSARY FOR ABOVE-CEILING CONSTRUCTION. REFER TO SHEETS AD122 AND AD123 FOR EXTENTS OF CEILING REMOVAL.
D	PHASE 1 TO BE FULLY TESTED AND BALANCED AND OPERATIONAL PRIOR TO BEGINNING PHASE 2.
E	PHASE 2 TO BE FULLY TESTED AND BALANCED AND OPERATIONAL PRIOR TO BEGINNING PHASE 3.
F	EXISTING CHW AND CRAC SYSTEMS TO REMAIN OPERATIONAL UNTIL NEW SYSTEM IS INSTALLED
G	ROUTE ALL CONDENSATE DRAIN LINES TO NEAREST FLOOR DRAIN.
H	AVOID ROUTING HYDRONIC PIPING OVER ELECTRICAL EQUIPMENT.

KEY PLAN

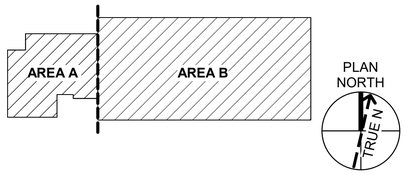

0 4000 8000
SCALE: 1:200

US Army Corps of Engineers
Japan District ®

FOR REVIEW ONLY

THESE DOCUMENTS ARE FOR CONCEPT DESIGN AND NOT INTENDED FOR CONSTRUCTION, BIDDING OR PERMIT PURPOSES. THEY WERE PREPARED BY, OR UNDER SUPERVISION OF:

BRIAN C. ALLERHEILIGEN
NAME

93876 — REGISTRATION #
09/04/2025 — DATE

TEXAS REGISTERED ENGINEERING FIRM F-2966

MARK	DESCRIPTION	DATE

DESIGNED BY: K. WILKINS
DRAWN BY: C. MATTHEWS
CHECKED BY: B. SCHNEIDER
SUBMITTED BY: A. GUERRA
SIZE: ISO A1
ISSUE DATE: 09/04/2025
SOLICITATION NO.:
CONTRACT NO.:
DRAWING CODE:
FILE NAME: MD101

US ARMY CORPS OF ENGINEERS
JAPAN ENGINEER DISTRICT
OKINAWA, JAPAN

Jacobs
JACOBS GOVERNMENT SERVICES COMPANY
777 MAIN STREET / FORT WORTH, TX 76102 USA

FY25 REPAIR HVAC WIDEBAND SATCOM OPS B100
CAMP BUCKNER COMMUNICATIONS ANNEX
OKINAWA, JAPAN
PROJECT NUMBER:D3449305

OVERALL DEMOLITION HVAC PLAN

SHEET ID
MD101

DRAFT

M MD101-

FILE PATH: C:\Users\MOHAPPC\Documents\D3449305-M-3D_MOHAPPC.rvt
PLOT DATE: 8/29/2025 3:11:06 PM PLOTTED BY: PLOT SCALE: 1 : 200

BACKCHECK SUBMITTAL DESIGN

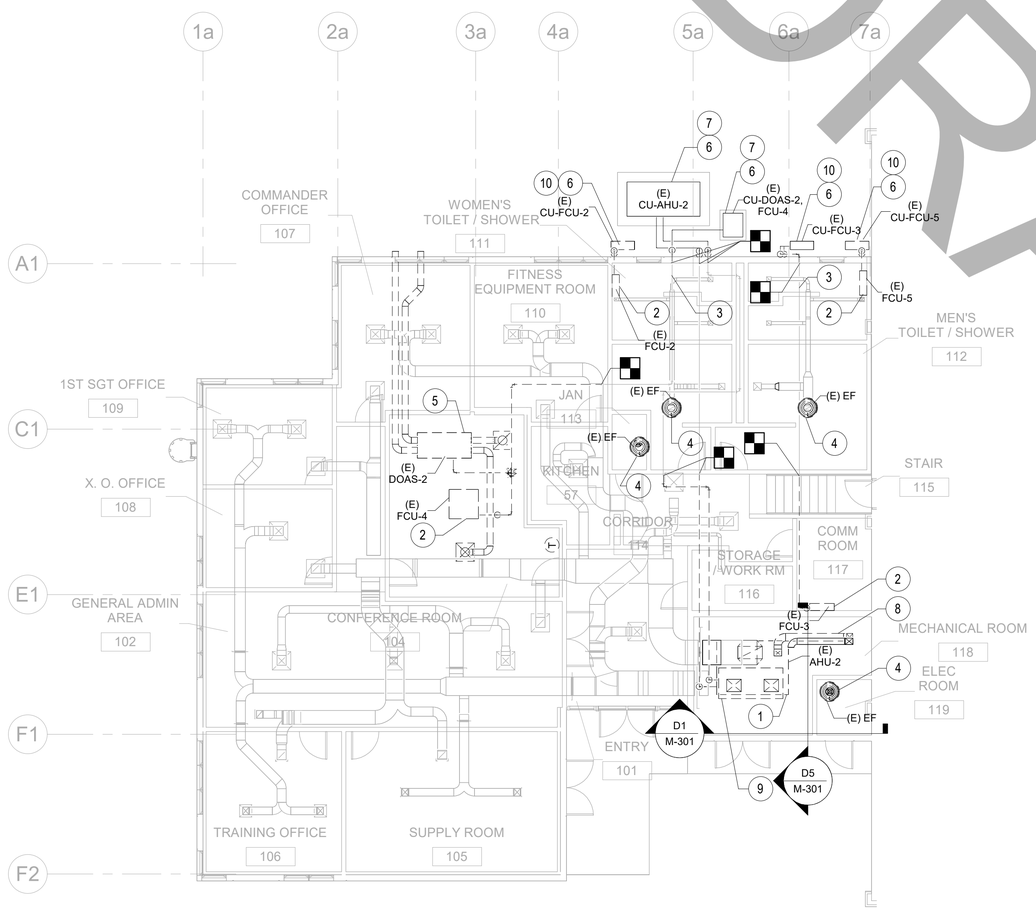

A1 PARTIAL DEMOLITION HVAC - AREA A

1 : 100

DRAFT

GENERAL SHEET NOTES

A	ORIGINAL AIR FLOWS FOR EXISTING AIR DEVICES SHOWN. SYSTEM TO BE FULLY TESTED AND BALANCED PRIOR TO DEMOLITION. SUBMIT TAB REPORT TO GOVERNMENT.
B	REFER TO SHEET GI010 AND GI011 FOR PHASING PLAN.
C	EXISTING CEILING TO REMAIN, WITH PORTIONS REMOVED AS NECESSARY FOR ABOVE-CEILING CONSTRUCTION. REFER TO SHEETS AD122 AND AD123 FOR EXTENTS OF CEILING REMOVAL.
D	PHASE 1 TO BE FULLY TESTED AND BALANCED AND OPERATIONAL PRIOR TO BEGINNING PHASE 2.
E	PHASE 2 TO BE FULLY TESTED AND BALANCED AND OPERATIONAL PRIOR TO BEGINNING PHASE 3.
F	EXISTING CHW AND CRAC SYSTEMS TO REMAIN OPERATIONAL UNTIL NEW SYSTEM IS INSTALLED
G	ROUTE ALL CONDENSATE DRAIN LINES TO NEAREST FLOOR DRAIN.
H	AVOID ROUTING HYDRONIC PIPING OVER ELECTRICAL EQUIPMENT.

(XX) SHEET KEYNOTES

1	PHASE 3: REMOVE EXISTING AIR HANDLING UNIT, ASSOCIATED REFRIGERANT PIPING AND CONDENSING UNIT. EXISTING DUCTWORK TO REMAIN.
2	PHASE 3: REMOVE EXISTING SPLIT SYSTEM, ASSOCIATED REFRIGERANT PIPING, THERMOSTAT AND CONDENSING UNIT.
3	PHASE 3: EXISTING REFRIGERANT PIPING LOCATED ABOVE RESTROOMS TO BE ABANDONED IN PLACE.
4	PHASE 3: REMOVE EXISTING ROOF MOUNTED EXHAUST FAN. EXISTING EXHAUST DUCTWORK TO REMAIN.
5	PHASE 3: REMOVE EXISTING DOAS UNIT, ASSOCIATED REFRIGERANT PIPING, DUCTWORK AND CONDENSING UNIT. RE: SHEET AD-122 FOR EXTERIOR WALL PATCHING.
6	PHASE 3: REMOVE EXISTING CONDENSING UNIT AND ASSOCIATED REFRIGERANT PIPING. RE: ARCHITECTURE FOR PATCHING AND FOR REMOVAL OF PIPING THROUGH EXTERIOR WALL, RE: SHEET AD-122 FOR WALL PATCHING.
7	EXISTING CONCRETE PAD TO REMAIN.
8	REMOVE EXISTING DUCTWORK.
9	DISCONNECT EXISTING SUPPLY PLENUM AND ASSOCIATED DUCTWORK CONNECTED TO THE EXISTING AHU BEING REMOVED.
10	EXISTING WALL MOUNT TO REMAIN AND BE RE-USED.

KEY PLAN

GRAPHIC SCALE(S)

0 2000 4000

SCALE: 1:100

US Army Corps of Engineers
Japan District ®

FOR REVIEW ONLY

THESE DOCUMENTS ARE FOR CONCEPT DESIGN AND NOT INTENDED FOR CONSTRUCTION, BIDDING OR PERMIT PURPOSES. THEY WERE PREPARED BY, OR UNDER SUPERVISION OF:

BRIAN C. ALLERHEILIGEN
NAME

93876 — REGISTRATION #
09/04/2025 — DATE

TEXAS REGISTERED ENGINEERING FIRM F-2966

MARK	DESCRIPTION	DATE

ISSUE DATE: 09/04/2025
SOLICITATION NO.:
CONTRACT NO.:
DRAWING CODE:

DESIGNED BY: K. WILKINS
DRAWN BY: C. HAYES
CHECKED BY: B. SCHNEIDER
SUBMITTED BY: A. GUERRA
SIZE: ISO A1
FILE NAME: MD102

US ARMY CORPS OF ENGINEERS
JAPAN ENGINEER DISTRICT
OKINAWA, JAPAN

Jacobs
JACOBS GOVERNMENT SERVICES COMPANY
777 MAIN STREET / FORT WORTH, TX 76102 USA

FY25 REPAIR HVAC WIDEBAND SATCOM OPS B100
CAMP BUCKNER COMMUNICATIONS ANNEX
OKINAWA, JAPAN
PROJECT NUMBER:D3449305

PARTIAL DEMOLITION HVAC - AREA A

SHEET ID

MD102

M MD102-

FILE PATH: C:\Users\MOHAPPC\Documents\D3449305-M-3D_MOHAPPC.rvt
PLOT DATE: 8/29/2025 3:11:06 PM PLOTTED BY: PLOT SCALE: 1 : 100

BACKCHECK SUBMITTAL DESIGN

SHEET KEYNOTES

1	PHASE 1: REMOVE EXISTING CHILLER CH-2, ASSOCIATED PUMP CWP-2, CONDENSING UNIT CU-2 AND ALL ASSOCIATED REFRIGERANT PIPING.
2	PHASE 1: REMOVE EXISTING DOAS UNIT. EXISTING DUCTWORK TO REMAIN.
3	PHASE 1: REMOVE EXISTING SPLIT SYSTEM, ASSOCIATED REFRIGERANT PIPING, THERMOSTAT AND CONDENSING UNIT.
4	PHASE 1: REMOVE EXISTING AIR HANDLING UNIT AND ALL ASSOCIATED DUCTWORK, VAV BOXES, AIR DEVICES AND CONTROLS.
5	PHASE 2: REMOVE EXISTING CHILLER CH-1, ASSOCIATED PUMP CWP-1, CONDENSING UNIT CU-1 AND ALL ASSOCIATED REFRIGERANT PIPING.
6	PHASE 2: REMOVE EXISTING CRAC UNIT AND ASSOCIATED CONTROLS, (TYPICAL).
7	PHASE 2: REMOVE EXISTING CHILLED WATER PIPING LOOP.
8	PHASE 1: REMOVE EXISTING IN-LINE EXHAUST FAN. EXISTING DUCTWORK TO REMAIN.
9	REMOVE EXISTING EXHAUST FAN. EXISTING EXHAUST DUCTWORK TO REMAIN.
10	EXISTING EXHAUST FAN AND ASSOCIATED DUCTWORK TO REMAIN.
11	REMOVE PORTION OF EXISTING DUCTWORK.
12	REMOVE INTAKE COVER EXTENDING BELOW 3048MM AFF AND INFILL AS NEEDED.
13	REMOVE EXISTING OUTSIDE AIR LOUVER AND INFILL. REFER TO S-201 FOR DETAILS.
14	REMOVE EXISTING EXHAUST FAN AND ASSOCIATED DUCTWORK.

GENERAL SHEET NOTES

A	ORIGINAL AIR FLOWS FOR EXISTING AIR DEVICES SHOWN. SYSTEM TO BE FULLY TESTED AND BALANCED PRIOR TO DEMOLITION. SUBMIT TAB REPORT TO GOVERNMENT.
B	REFER TO SHEET GI010 AND GI011 FOR PHASING PLAN.
C	EXISTING CEILING TO REMAIN, WITH PORTIONS REMOVED AS NECESSARY FOR ABOVE-CEILING CONSTRUCTION. REFER TO SHEETS AD122 AND AD123 FOR EXTENTS OF CEILING REMOVAL.
D	PHASE 1 TO BE FULLY TESTED AND BALANCED AND OPERATIONAL PRIOR TO BEGINNING PHASE 2.
E	PHASE 2 TO BE FULLY TESTED AND BALANCED AND OPERATIONAL PRIOR TO BEGINNING PHASE 3.
F	EXISTING CHW AND CRAC SYSTEMS TO REMAIN OPERATIONAL UNTIL NEW SYSTEM IS INSTALLED
G	ROUTE ALL CONDENSATE DRAIN LINES TO NEAREST FLOOR DRAIN.
H	AVOID ROUTING HYDRONIC PIPING OVER ELECTRICAL EQUIPMENT.

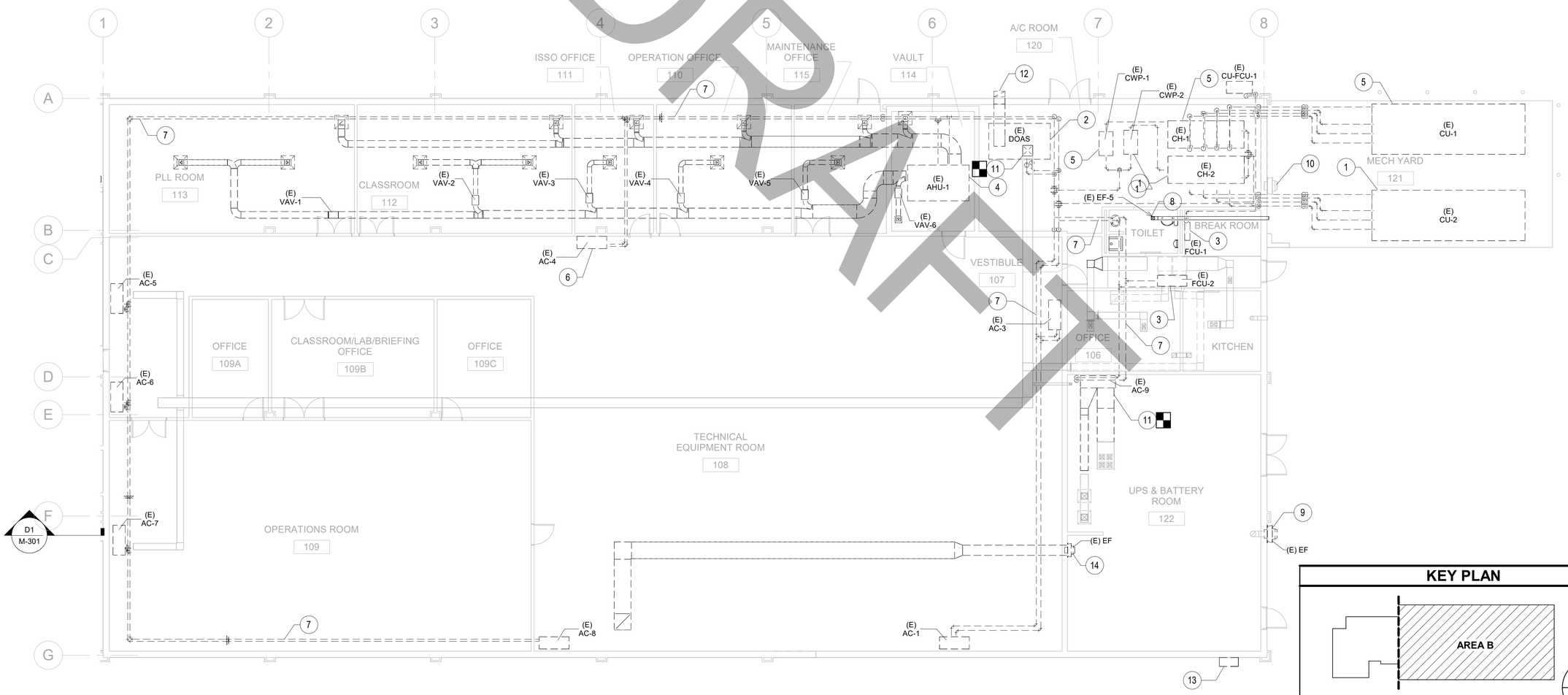

A1 PARTIAL DEMOLITION HVAC - AREA B
1 : 100

KEY PLAN

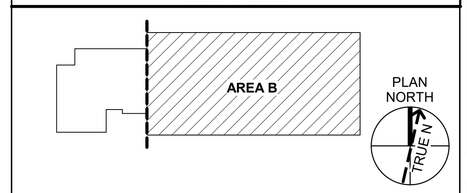

GRAPHIC SCALE(S)

0 2000 4000
SCALE: 1:100

US Army Corps of Engineers
Japan District ®

FOR REVIEW ONLY

THESE DOCUMENTS ARE FOR CONCEPT DESIGN AND NOT INTENDED FOR CONSTRUCTION, BIDDING OR PERMIT PURPOSES. THEY WERE PREPARED BY, OR UNDER SUPERVISION OF:

BRIAN C. ALLERHEILIGEN
NAME
93876 REGISTRATION # 09/04/2025 DATE
TEXAS REGISTERED ENGINEERING FIRM F-2966

MARK	DESCRIPTION	DATE

ISSUE DATE: 09/04/2025
SOLICITATION NO.:
CONTRACT NO.:
DRAWING CODE:
DESIGNED BY: K. WILKINS
DRAWN BY: J. WITTWER
CHECKED BY: B. SCHNEIDER
SUBMITTED BY: A. GUERRA
SIZE: ISO A1
FILE NAME: MD103

US ARMY CORPS OF ENGINEERS
JAPAN ENGINEER DISTRICT
OKINAWA, JAPAN

Jacobs
JACOBS GOVERNMENT SERVICES COMPANY
777 MAIN STREET, FORT WORTH, TX 76102
USA

FY25 REPAIR HVAC WIDEBAND SATCOM OPS B100
CAMP BUCKNER COMMUNICATIONS ANNEX
OKINAWA, JAPAN
PROJECT NUMBER:D3449305

PARTIAL DEMOLITION HVAC - AREA B

SHEET ID
MD103

DRAFT

FILE PATH: C:\Users\MOHAPPC\Documents\D3449305-M-3D_MOHAPPC.rvt
PLOT DATE: 8/29/2025 3:11:07 PM PLOTTED BY: PLOT SCALE: 1 : 100

BACKCHECK SUBMITTAL DESIGN

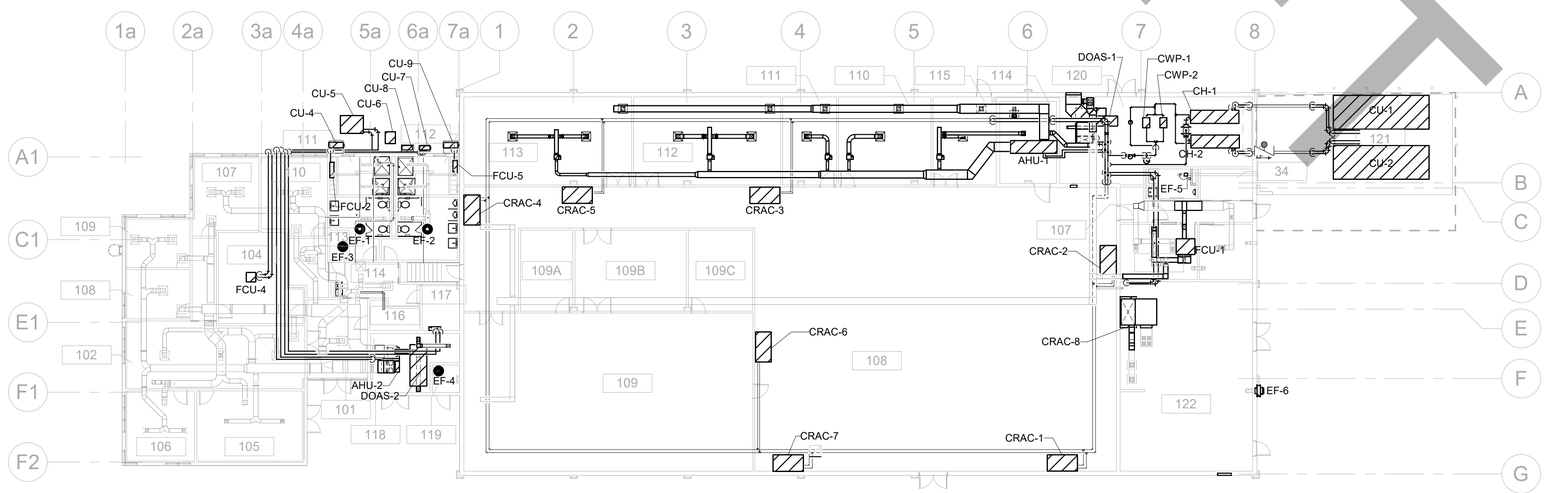

A1 OVERALL HVAC PLAN

1 : 200

DRAFT

GENERAL SHEET NOTES

A	ORIGINAL AIR FLOWS FOR EXISTING AIR DEVICES SHOWN. SYSTEM TO BE FULLY TESTED AND BALANCED PRIOR TO DEMOLITION. SUBMIT TAB REPORT TO GOVERNMENT.
B	REFER TO SHEET GI010 AND GI011 FOR PHASING PLAN.
C	EXISTING CEILING TO REMAIN, WITH PORTIONS REMOVED AS NECESSARY FOR ABOVE-CEILING CONSTRUCTION. REFER TO SHEETS AD122 AND AD123 FOR EXTENTS OF CEILING REMOVAL.
D	PHASE 1 TO BE FULLY TESTED AND BALANCED AND OPERATIONAL PRIOR TO BEGINNING PHASE 2.
E	PHASE 2 TO BE FULLY TESTED AND BALANCED AND OPERATIONAL PRIOR TO BEGINNING PHASE 3.
F	EXISTING CHW AND CRAC SYSTEMS TO REMAIN OPERATIONAL UNTIL NEW SYSTEM IS INSTALLED
G	ROUTE ALL CONDENSATE DRAIN LINES TO NEAREST FLOOR DRAIN.
H	AVOID ROUTING HYDRONIC PIPING OVER ELECTRICAL EQUIPMENT.

KEY PLAN

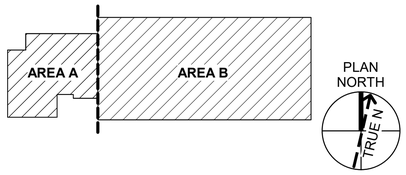

GRAPHIC SCALE(S)

0 4000 8000

SCALE: 1:200

US Army Corps of Engineers
Japan District ®

FOR REVIEW ONLY

THESE DOCUMENTS ARE FOR CONCEPT DESIGN AND NOT INTENDED FOR CONSTRUCTION, BIDDING OR PERMIT PURPOSES. THEY WERE PREPARED BY, OR UNDER SUPERVISION OF:

BRIAN C. ALLERHEILIGEN
NAME

93876 — REGISTRATION #
09/04/2025 — DATE

TEXAS REGISTERED ENGINEERING FIRM F-2966

MARK	DESCRIPTION	DATE

DESIGNED BY: K. WILKINS
DRAWN BY: C. WATTERS
CHECKED BY: B. SCHNEIDER
SUBMITTED BY: A. GUERRA
SIZE: ISO A1
ISSUE DATE: 09/04/2025
SOLICITATION NO.:
CONTRACT NO.:
DRAWING CODE:
FILE NAME: M-101

US ARMY CORPS OF ENGINEERS
JAPAN ENGINEER DISTRICT
OKINAWA, JAPAN

Jacobs
JACOBS GOVERNMENT SERVICES COMPANY
777 MAIN STREET / FORT WORTH, TX 76102 USA

FY25 REPAIR HVAC WIDEBAND SATCOM OPS B100
CAMP BUCKNER COMMUNICATIONS ANNEX
OKINAWA, JAPAN
PROJECT NUMBER:D3449305

OVERALL HVAC PLAN

SHEET ID

M-101

M M-101-

FILE PATH: C:\Users\MOHAPPC\Documents\D3449305-M-3D_MOHAPPC.rvt
PLOT DATE: 8/29/2025 3:10:46 PM PLOTTED BY: PLOT SCALE: 1 : 200

BACKCHECK SUBMITTAL DESIGN

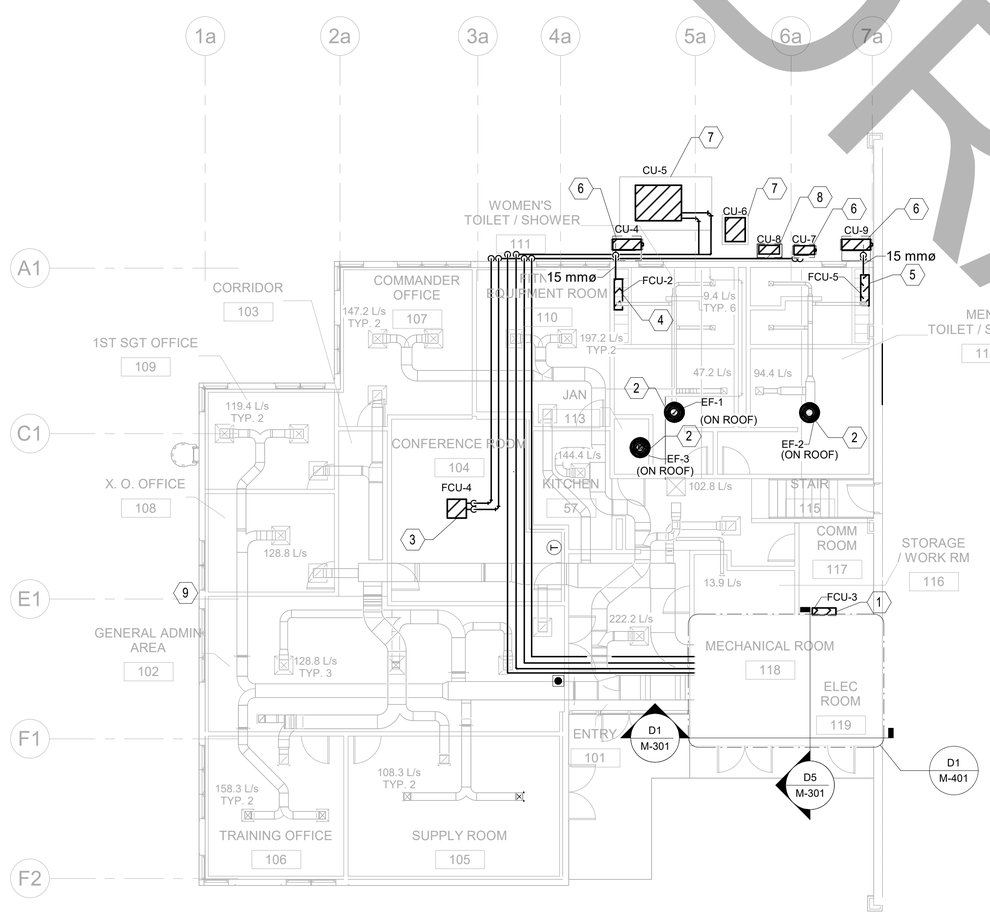

DRAFT

A1 PARTIAL HVAC FLOOR PLAN - AREA A

1 : 100

GENERAL SHEET NOTES

A	ORIGINAL AIR FLOWS FOR EXISTING AIR DEVICES SHOWN. SYSTEM TO BE FULLY TESTED AND BALANCED PRIOR TO DEMOLITION. SUBMIT TAB REPORT TO GOVERNMENT.
B	REFER TO SHEET GI010 AND GI011 FOR PHASING PLAN.
C	EXISTING CEILING TO REMAIN, WITH PORTIONS REMOVED AS NECESSARY FOR ABOVE-CEILING CONSTRUCTION. REFER TO SHEETS AD122 AND AD123 FOR EXTENTS OF CEILING REMOVAL.
D	PHASE 1 TO BE FULLY TESTED AND BALANCED AND OPERATIONAL PRIOR TO BEGINNING PHASE 2.
E	PHASE 2 TO BE FULLY TESTED AND BALANCED AND OPERATIONAL PRIOR TO BEGINNING PHASE 3.
F	EXISTING CHW AND CRAC SYSTEMS TO REMAIN OPERATIONAL UNTIL NEW SYSTEM IS INSTALLED
G	ROUTE ALL CONDENSATE DRAIN LINES TO NEAREST FLOOR DRAIN.
H	AVOID ROUTING HYDRONIC PIPING OVER ELECTRICAL EQUIPMENT.

XX SHEET KEYNOTES

1	PHASE 3: PROVIDE NEW WALL MOUNTED MINI SPLIT UNIT, FCU-3, AND ASSOCIATED CONDENSING UNIT, CU-7.
2	PHASE 3: PROVIDE NEW ROOF MOUNTED EXHAUST FAN. CONNECT TO EXISTING EXHAUST DUCTWORK. REFER TO AD131 FOR ADDITIONAL INFORMATION.
3	PHASE 3: PROVIDE CEILING MOUNTED CASSETTE STYLE MINI SPLIT SYSTEM, FCU-4, AND ASSOCIATED CONDENSING UNIT, CU-8.
4	PHASE 3: PROVIDE NEW WALL MOUNTED MINI SPLIT UNIT, FCU-2 AND ASSOCIATED CONDENSING UNIT, CU-4. CONNECT TO EXISTING CONDENSATE DRAIN.
5	PHASE 3: PROVIDE NEW WALL MOUNTED MINI SPLIT UNIT, FCU-5 AND ASSOCIATED CONDENSING UNIT, CU-9. CONNECT TO EXISTING CONDENSATE DRAIN.
6	RE-USE EXISTING WALL MOUNT FOR NEW CONDENSING UNIT.
7	RE-USE EXISTING HOUSEKEEPING PAD FOR NEW CONDENSING UNIT.
8	PROVIDE NEW HOUSEKEEPING PAD FOR NEW CONDENSING UNIT. REFER TO STRUCTURAL FOR DETAIL.
9	EXISTING RADON FAN IS OPERATIONAL AND SHOULD REMAIN.

KEY PLAN

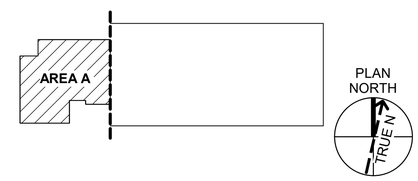

GRAPHIC SCALE(S)

0 2000 4000

SCALE: 1:100

US Army Corps of Engineers
Japan District ®

FOR REVIEW ONLY

THESE DOCUMENTS ARE FOR CONCEPT DESIGN AND NOT INTENDED FOR CONSTRUCTION, BIDDING OR PERMIT PURPOSES. THEY WERE PREPARED BY, OR UNDER SUPERVISION OF:

BRIAN C. ALLERHEILIGEN
NAME

93876 — REGISTRATION #
09/04/2025 — DATE

TEXAS REGISTERED ENGINEERING FIRM F-2966

MARK	DESCRIPTION	DATE

ISSUE DATE: 09/04/2025
SOLICITATION NO.:
CONTRACT NO.:
DRAWING CODE:

DESIGNED BY: K. WILKINS
DRAWN BY: C. HAYES
CHECKED BY: B. SCHNEIDER
SUBMITTED BY: A. GUERRA
SIZE: ISO A1
FILE NAME: M-102

US ARMY CORPS OF ENGINEERS
JAPAN ENGINEER DISTRICT
OKINAWA, JAPAN

Jacobs
JACOBS GOVERNMENT SERVICES COMPANY
777 MAIN STREET / FORT WORTH, TX 76102 USA

FY25 REPAIR HVAC WIDEBAND SATCOM OPS B100
CAMP BUCKNER COMMUNICATIONS ANNEX
OKINAWA, JAPAN
PROJECT NUMBER:D3449305

PARTIAL HVAC FLOOR PLAN - AREA A

SHEET ID

M-102

M M-102-

FILE PATH: C:\Users\MOHAPPC\Documents\D3449305-M-3D_MOHAPPC.rvt
PLOT DATE: 8/29/2025 3:10:48 PM PLOTTED BY: PLOT SCALE: 1 : 100

BACKCHECK SUBMITTAL DESIGN

SHEET KEYNOTES

1	PHASE 1: PROVIDE NEW CRAC UNIT. CONNECT NEW CHWS AND CHWR FROM NEW PIPING LOOP. CONNECT TO EXISTING CONDENSATE DRAIN. RE: E1/M-501 FOR DETAIL.
2	PHASE 1: PROVIDE NEW VAV AIR HANDLING UNIT, AHU-1. INSTALL UNIT ON MECHANICAL DECK ABOVE THE VAULT. PROVIDE STAND IF NEEDED TO RAISE UNIT 300MM ABOVE BASE TO ACCOMMODATE CONDENSATE TRAP. ROUTE NEW CONDENSATE FROM UNIT AND CONNECT INTO EXISTING CONEDNSATE MAIN. PROVIDE NEW DUCTWORK AND ROUTE AS SHOWN. CONNECT NEW CHWS AND CHWR FROM NEW PIPING LOOP.
3	PHASE 1: PROVIDE NEW DUCTED FAN COIL UNIT, FCU-1 AND ASSOCIATED PIPING. CONNECT TO EXISTING DUCTWORK AND EXISTING CONDENSATE DRAIN. CONNECT TO NEW CHILLED WATER PIPING.
4	PHASE 1: PROVIDE NEW IN-LINE RESTROOM EXHAUST FAN. CONNECT TO EXISTING DUCTWORK
5	PHASE 1: PROVIDE NEW CHILLED WATER PIPING LOOP.
6	ROUTE CHWS AND CHWR PIPING ABOVE CEILING OVER VAULT, THEN DROP DOWN TO BELOW FLOOR OF THE MAINTENANCE OFFICE AND ROUTE AS SHOWN BELOW RAISED FLOOR.
7	PHASE 2: PROVIDE NEW CHILLER, CH-1, ASSOCIATED PUMP, CWP-1, CONDENSING UNIT, CU-1 AND NEW REFRIGERANT PIPING.
8	PHASE 1: PROVIDE NEW CHILLER, CH-2, ASSOCIATED PUMP, CWP-2, CONDENSING UNIT, CU-2 AND NEW REFRIGERANT PIPING.
9	PROVIDE NEW EXHAUST FAN, EF-7. CONNECT TO EXISTING EXHAUST DUCTWORK.
10	PHASE 1: PROVIDE VAV TERMINAL UNIT AND ASSOCIATED SENSOR/CONTROLLER. RE: M-602 AND M-804.
11	PROVIDE DIELECTRIC BREAK ON SECURE SIDE OF WALL
12	MAINTENANCE ACCESS FROM BELOW.
13	BATTERY ROOM CONTAINS AN EMERGENCY EYEWASH AND SHOWER PER NFPA .

GENERAL SHEET NOTES

A	ORIGINAL AIR FLOWS FOR EXISTING AIR DEVICES SHOWN. SYSTEM TO BE FULLY TESTED AND BALANCED PRIOR TO DEMOLITION. SUBMIT TAB REPORT TO GOVERNMENT.
B	REFER TO SHEET GI010 AND GI011 FOR PHASING PLAN.
C	EXISTING CEILING TO REMAIN, WITH PORTIONS REMOVED AS NECESSARY FOR ABOVE-CEILING CONSTRUCTION. REFER TO SHEETS AD122 AND AD123 FOR EXTENTS OF CEILING REMOVAL.
D	PHASE 1 TO BE FULLY TESTED AND BALANCED AND OPERATIONAL PRIOR TO BEGINNING PHASE 2.
E	PHASE 2 TO BE FULLY TESTED AND BALANCED AND OPERATIONAL PRIOR TO BEGINNING PHASE 3.
F	EXISTING CHW AND CRAC SYSTEMS TO REMAIN OPERATIONAL UNTIL NEW SYSTEM IS INSTALLED
G	ROUTE ALL CONDENSATE DRAIN LINES TO NEAREST FLOOR DRAIN.
H	AVOID ROUTING HYDRONIC PIPING OVER ELECTRICAL EQUIPMENT.

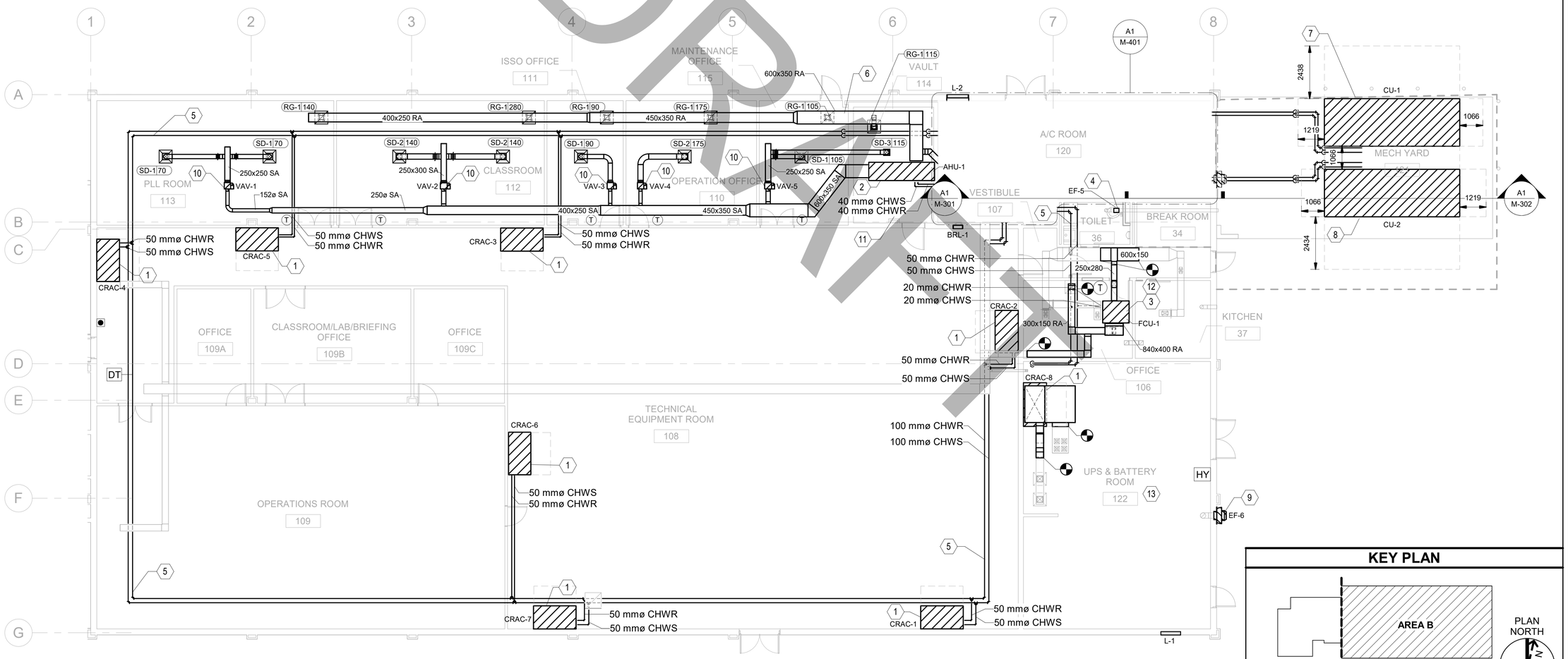

A1 PARTIAL HVAC FLOOR PLAN - AREA B
1 : 100

KEY PLAN

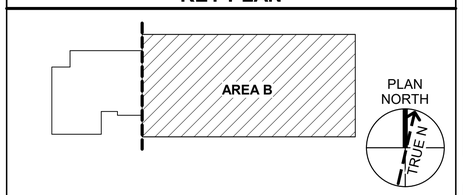

GRAPHIC SCALE(S)

0 2000 4000
SCALE: 1:100

US Army Corps of Engineers
Japan District ®

FOR REVIEW ONLY
THESE DOCUMENTS ARE FOR CONCEPT DESIGN AND NOT INTENDED FOR CONSTRUCTION, BIDDING OR PERMIT PURPOSES. THEY WERE PREPARED BY, OR UNDER SUPERVISION OF:
BRIAN C. ALLERHEILIGEN
NAME
93876 09/04/2025
REGISTRATION # DATE
TEXAS REGISTERED ENGINEERING FIRM F-2966

MARK	DESCRIPTION	DATE

ISSUE DATE: 09/04/2025
SOLICITATION NO.:
CONTRACT NO.:
DRAWING CODE:
DESIGNED BY: K. WILKINS
DRAWN BY: M. WATT
CHECKED BY: B. SCHNEIDER
SUBMITTED BY: A. GUERRA
SIZE: ISO A1
FILE NAME: M-103

US ARMY CORPS OF ENGINEERS
JAPAN ENGINEER DISTRICT
OKINAWA, JAPAN

Jacobs
JACOBS GOVERNMENT SERVICES COMPANY
777 MAIN STREET, FORT WORTH, TX 76102
USA

FY25 REPAIR HVAC WIDEBAND SATCOM OPS B100
CAMP BUCKNER COMMUNICATIONS ANNEX
OKINAWA, JAPAN
PROJECT NUMBER:D3449305
PARTIAL HVAC FLOOR PLAN - AREA B

SHEET ID
M-103

DRAFT

FILE PATH: C:\Users\MOHAPPC\Documents\D3449305-M-3D_MOHAPPC.rvt
PLOT DATE: 8/29/2025 3:10:50 PM PLOTTED BY: PLOT SCALE: 1 : 100

BACKCHECK SUBMITTAL DESIGN

M M-103-

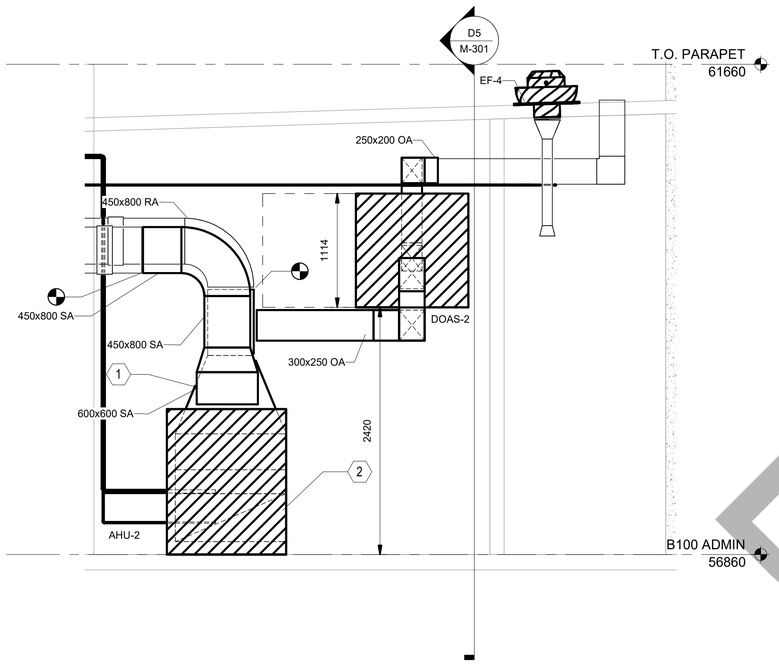

D1 MECHANICAL ROOM SECTION - AREA A
1 : 30

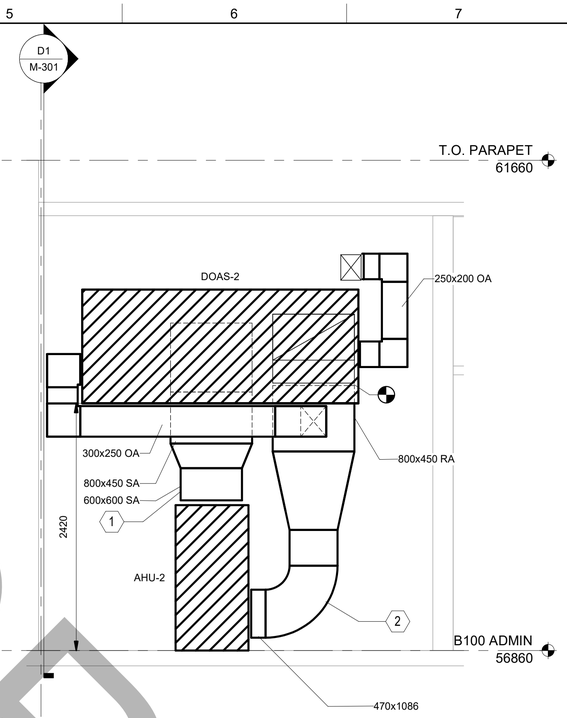

D5 MECHANICAL ROOM SECTION - AREA A - LOOKING WEST
1 : 30

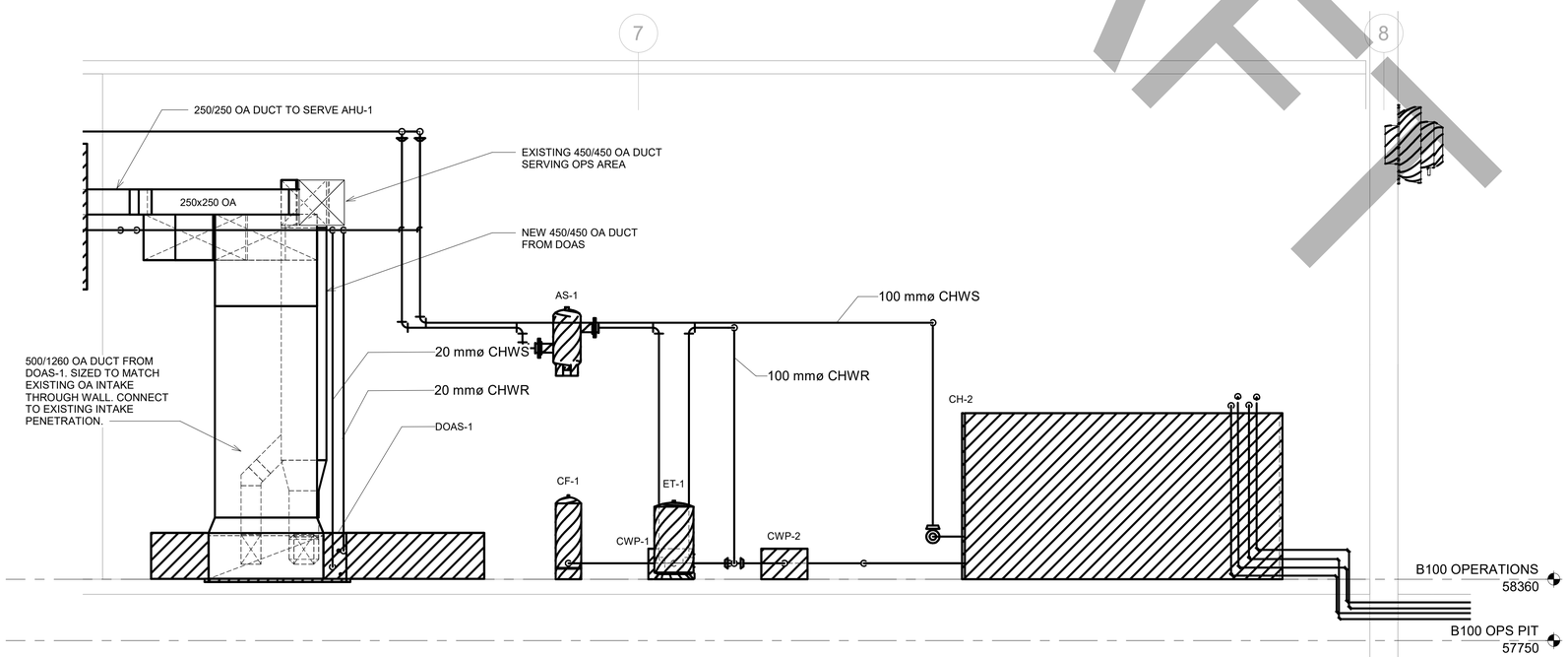

A1 MECHANICAL ROOM SECTION - AREA B
1 : 30

DRAFT

GENERAL SHEET NOTES

SHEET KEYNOTES

XX	
1	ROUTE FULL SIZE SUPPLY AIR FROM AHU. TRANSITION TO SIZE SHOWN, ROUTE AS SHOWN, AND CONNECT TO EXISTING SUPPLY DUCT.
2	ROUTE FULL SIZE RETURN AIR FROM AHU. TRANSITION TO SIZE SHOWN, ROUTE AS SHOWN, AND CONNECT TO EXISTING RETURN DUCT.

KEY PLAN

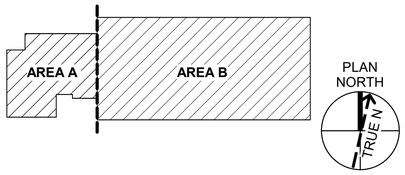

GRAPHIC SCALE(S)

US Army Corps of Engineers
Japan District ®

FOR REVIEW ONLY
THESE DOCUMENTS ARE FOR CONCEPT DESIGN AND NOT INTENDED FOR CONSTRUCTION, BIDDING OR PERMIT PURPOSES. THEY WERE PREPARED BY, OR UNDER SUPERVISION OF:
BRIAN C. ALLERHEILIGEN
NAME
93876 09/04/2025
REGISTRATION # DATE
TEXAS REGISTERED ENGINEERING FIRM F-2966

MARK	DESCRIPTION	DATE

ISSUE DATE: 09/04/2025
SOLICITATION NO.:
CONTRACT NO.:
DRAWING CODE:

DESIGNED BY: K. WILKINS
DRAWN BY: C. HAYNES
CHECKED BY: B. SCHNEIDER
SUBMITTED BY: A. GUERRA
SIZE: ISO A1
FILE NAME: M-301

US ARMY CORPS OF ENGINEERS
JAPAN ENGINEER DISTRICT
OKINAWA, JAPAN

Jacobs
JACOBS GOVERNMENT SERVICES COMPANY
777 MAIN STREET / FORT WORTH, TX 76102 USA

FY25 REPAIR HVAC WIDEBAND SATCOM OPS B100
CAMP BUCKNER COMMUNICATIONS ANNEX
OKINAWA, JAPAN
PROJECT NUMBER:D3449305
HVAC BUILDING SECTION

SHEET ID
M-301

M M-301-

FILE PATH: C:\Users\MOHAPPC\Documents\D3449305-M-3D_MOHAPPC.rvt
PLOT DATE: 8/29/2025 3:10:50 PM PLOTTED BY: PLOT SCALE: 1 : 30

BACKCHECK SUBMITTAL DESIGN

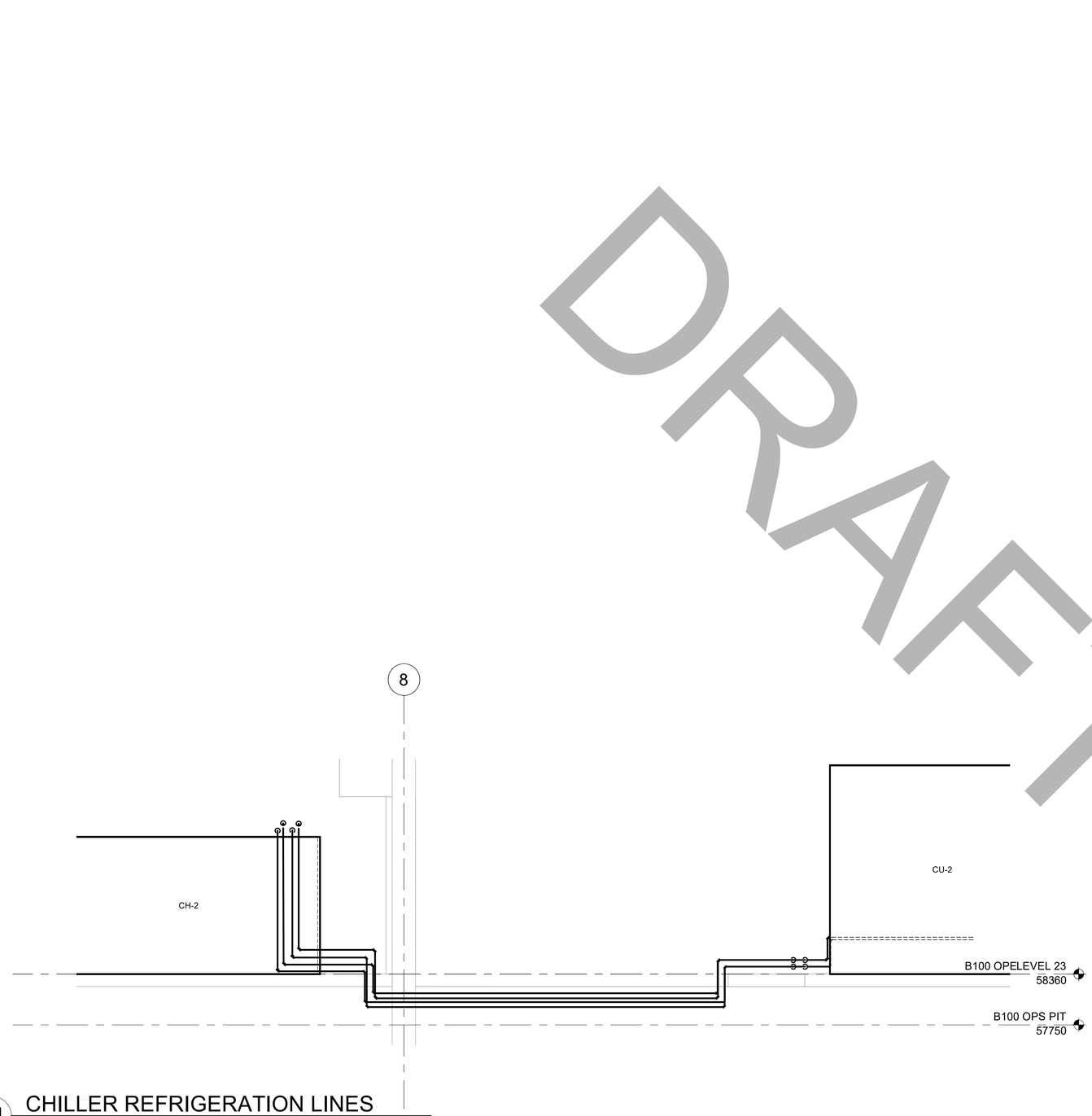

A1 CHILLER REFRIGERATION LINES
1 : 30

DRAFT

GENERAL SHEET NOTES

XX SHEET KEYNOTES

KEY PLAN

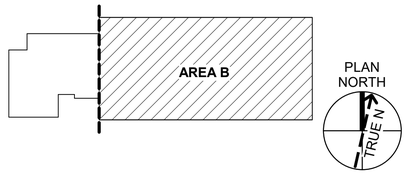

GRAPHIC SCALE(S)

0 500 1000 2000

SCALE: 1:50

US Army Corps of Engineers
Japan District ®

FOR REVIEW ONLY

THESE DOCUMENTS ARE FOR CONCEPT DESIGN AND NOT INTENDED FOR CONSTRUCTION, BIDDING OR PERMIT PURPOSES. THEY WERE PREPARED BY, OR UNDER SUPERVISION OF:

BRIAN C. ALLERHEILIGEN
NAME

93876 — REGISTRATION #
09/04/2025 — DATE

TEXAS REGISTERED ENGINEERING FIRM F-2966

MARK	DESCRIPTION	DATE

DESIGNED BY: K. WILKINS
DRAWN BY: C. HAYNES
CHECKED BY: B. SCHNEIDER
SUBMITTED BY: A. GUERRA
SIZE: ISO A1
ISSUE DATE: 09/04/2025
SOLICITATION NO.: -
CONTRACT NO.: -
DRAWING CODE:
FILE NAME: M-302

US ARMY CORPS OF ENGINEERS
JAPAN ENGINEER DISTRICT
OKINAWA, JAPAN

Jacobs
JACOBS GOVERNMENT SERVICES COMPANY
777 MAIN STREET / FORT WORTH, TX 76102
USA

FY25 REPAIR HVAC WIDEBAND SATCOM OPS B100
CAMP BUCKNER COMMUNICATIONS ANNEX
OKINAWA, JAPAN
PROJECT NUMBER:D3449305

HVAC BUILDING SECTION

SHEET ID
M-302

M M-302-

FILE PATH: C:\Users\MOHAPPC\Documents\D3449305-M-3D_MOHAPPC.rvt
PLOT DATE: 8/29/2025 3:10:50 PM PLOTTED BY: PLOT SCALE: 1 : 30

BACKCHECK SUBMITTAL DESIGN

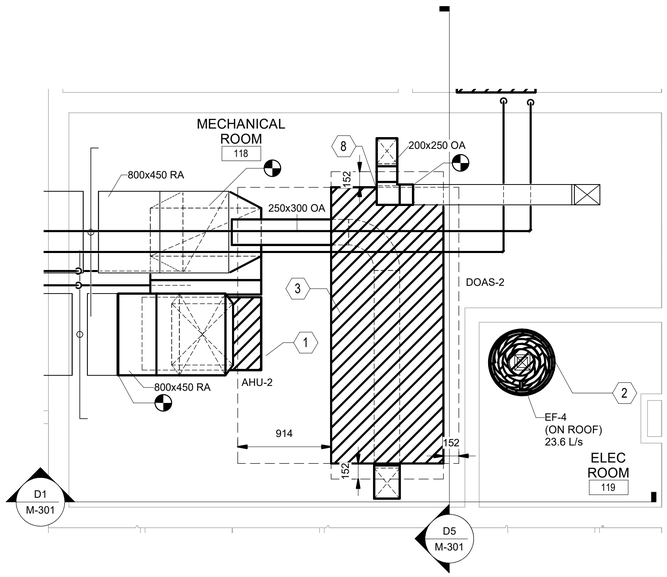

D1 ENLARGED HVAC FLOOR PLAN - AREA A

1 : 30

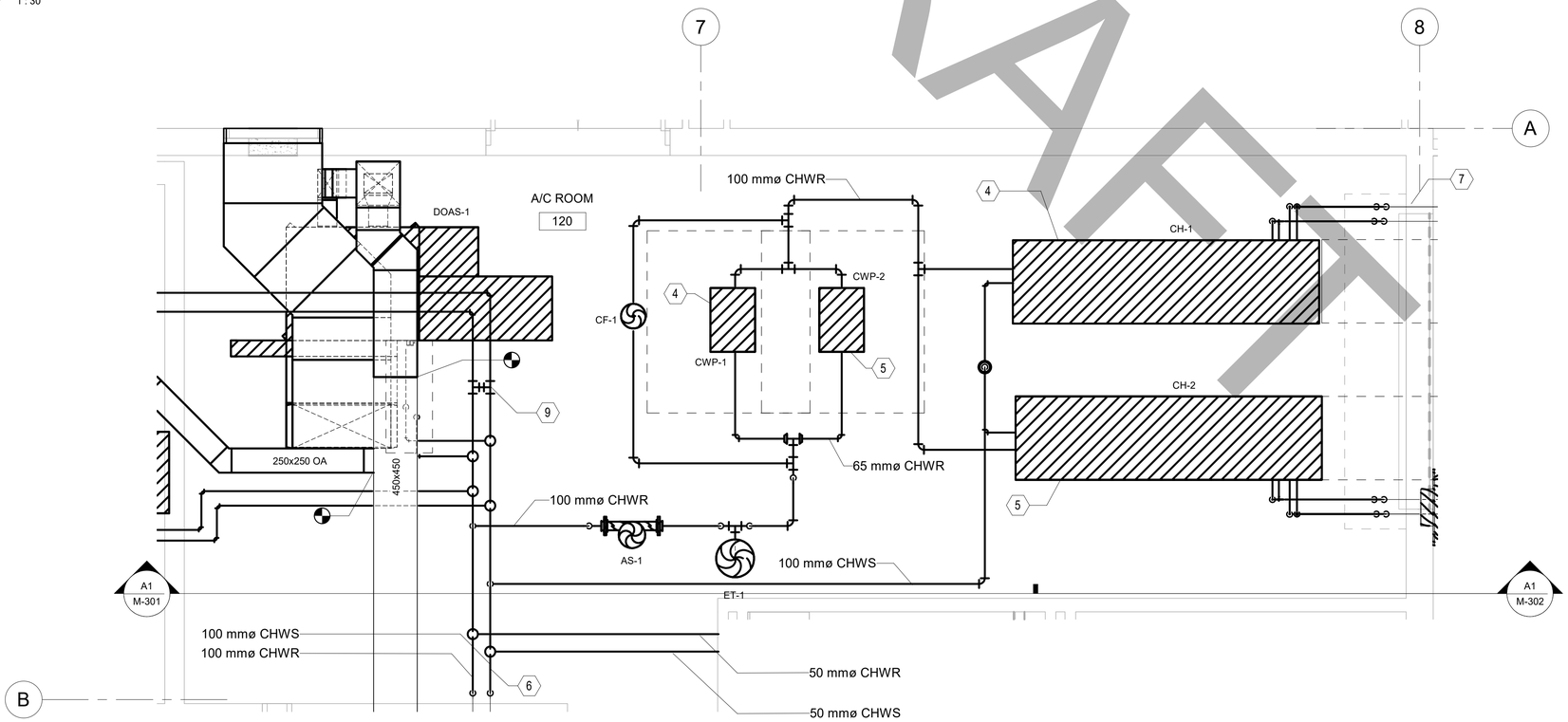

A1 ENLARGED HVAC FLOOR PLAN - AREA B

1 : 30

DRAFT

GENERAL SHEET NOTES

SHEET KEYNOTES

XX	
1	PHASE 3: PROVIDE NEW DX AIR HANDLING UNIT, AHU-2, AND ASSOCIATED CONDENSING UNIT, CU-5. CONNECT TO EXISTING DUCTWORK.
2	PHASE 3: PROVIDE NEW ROOF MOUNTED EXHAUST FAN. CONNECT TO EXISTING EXHAUST DUCTWORK. REFER TO AD131 FOR ADDITIONAL INFORMATION.
3	PHASE 3: PROVIDE NEW DOAS UNIT, DOAS-2, AND ASSOCIATED CONDENSING UNIT, CU-6. SUSPEND UNIT FROM STRUCTURE ABOVE. DUCT DIRECTLY INTO THE RETURN DUCT OF AHU-2.
4	PHASE 2: PROVIDE NEW CHILLER, CH-1, ASSOCIATED PUMP, CWP-1, CONDENSING UNIT, CU-1 AND NEW REFRIGERANT PIPING.
5	PHASE 1: PROVIDE NEW CHILLER, CH-2, ASSOCIATED PUMP, CWP-2, CONDENSING UNIT, CU-2 AND NEW REFRIGERANT PIPING.
6	PHASE 1: PROVIDE NEW CHILLED WATER PIPING LOOP.
7	REFRIGERANT LINES ROUTED IN EXISTING TRENCH OUT TO CONDENSING UNITS.
8	BLANK OFF UNUSED PORTION OF UNIT OPENING AND CONNECT TO 200MM X 250MM INLET.
9	CHW BYPASS.

KEY PLAN

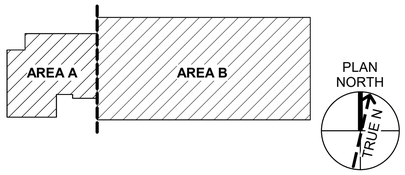

GRAPHIC SCALE(S)

US Army Corps of Engineers
Japan District ®

FOR REVIEW ONLY

THESE DOCUMENTS ARE FOR CONCEPT DESIGN AND NOT INTENDED FOR CONSTRUCTION, BIDDING OR PERMIT PURPOSES. THEY WERE PREPARED BY, OR UNDER SUPERVISION OF:

BRIAN C. ALLERHEILIGEN
NAME

93876 — REGISTRATION #
09/04/2025 — DATE

TEXAS REGISTERED ENGINEERING FIRM F-2966

MARK	DESCRIPTION	DATE

ISSUE DATE: 09/04/2025
SOLICITATION NO.:
CONTRACT NO.:
DRAWING CODE:

DESIGNED BY: K. WILKINS
DRAWN BY: C. MATTHEWS
CHECKED BY: B. SCHNEIDER
SUBMITTED BY: A. GUERRA
SIZE: ISO A1
FILE NAME: M-401

US ARMY CORPS OF ENGINEERS
JAPAN ENGINEER DISTRICT
OKINAWA, JAPAN

Jacobs
JACOBS GOVERNMENT SERVICES COMPANY
777 MAIN STREET / FORT WORTH, TX 76102
USA

FY25 REPAIR HVAC WIDEBAND SATCOM OPS B100
CAMP BUCKNER COMMUNICATIONS ANNEX
OKINAWA, JAPAN
PROJECT NUMBER:D3449305

HVAC ENLARGED PLANS

SHEET ID
M-401

M M-401-

FILE PATH: C:\Users\MOHAPPC\Documents\D3449305-M-3D_MOHAPPC.rvt
PLOT DATE: 8/29/2025 3:10:52 PM PLOTTED BY: PLOT SCALE: 1 : 30

BACKCHECK SUBMITTAL DESIGN

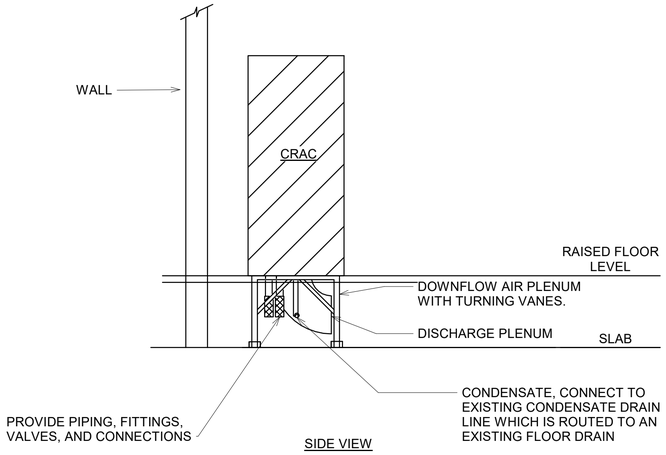

E1 TYPICAL CRAC DETAIL (DOWNFLOW)
NTS

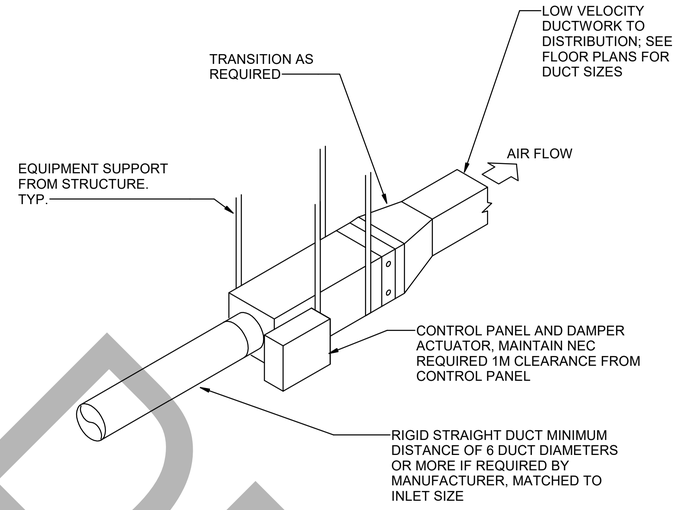

NOTES:
1. DO NOT SUPPORT UNIT WITH DUCTWORK (SUPPORT SEPARATELY).

D4 TYPICAL SINGLE DUCT TERMINAL UNIT
NTS

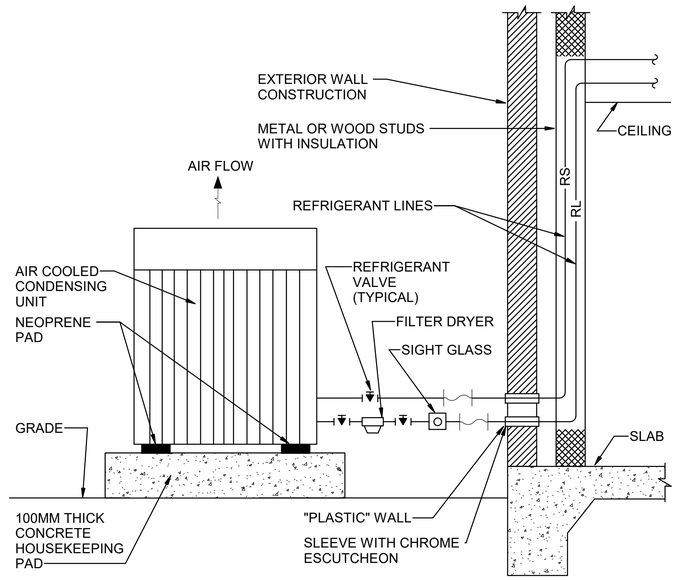

NOTE: REFRIGERANT LINE ACCESSORIES SHOWN ARE MINIMUM REQUIRED. PROVIDE ADDITIONAL ACCESSORIES AS REQUIRED BY MANUFACTURER.

D8 AIR COOLED CONDENSING UNIT
NTS

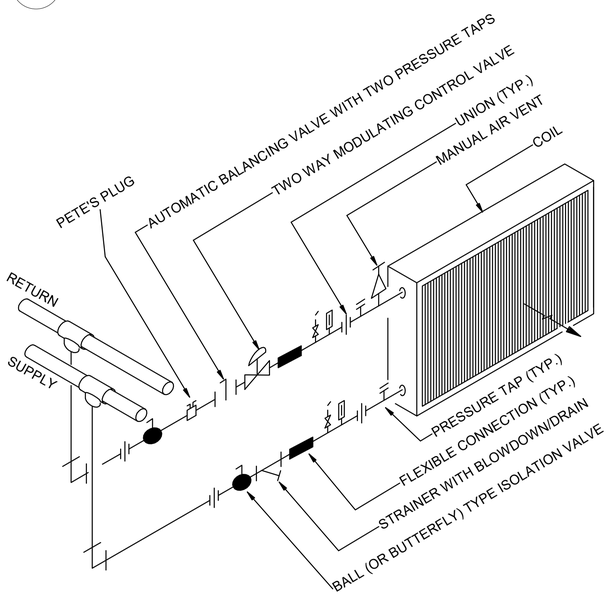

B1 WATER COIL PIPING (TWO-WAY VALVE SINGLE COIL)
NTS

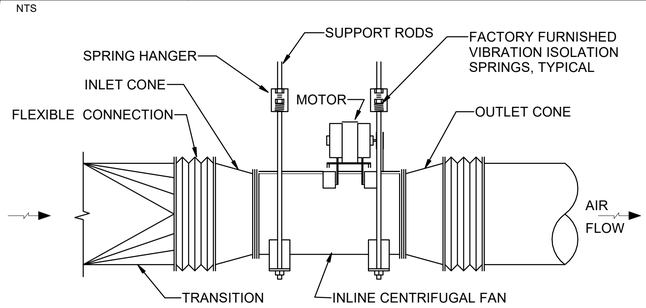

NOTE : PROVIDE INLET BELL FOR FANS WITHOUT INLET DUCT.

A1 INLINE CENTRIFUGAL FAN DETAIL
NTS

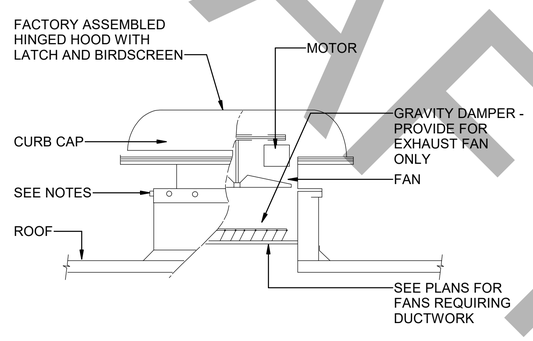

NOTES:
1. WHEN PLATE IS PROVIDED AROUND TOP OF CURB:
   A. SECURE HOOD TO PLATE WITH 6.35 MM X 38.1 MM LG CADMIUM PLATED LAG BOLTS NOT OVER 304.8 MM OC.
   B. EXTEND DUCT TO FULL HEIGHT OF CURB AND FASTEN HEM EDGE OF DUCT TO PLATE WITH SCREWS NOT OVER 152.4 MM OC.
2. WHEN PREFABRICATED METAL CURB IS USED, SECURE HOOD AND DUCTWORK WITH SHEETMETAL SCREWS AS REQUIRED FOR TIGHT JOINTS AND RIGID INSTALLATION.
3. PROVIDE PREFINISHED ALUMINUM BASE FLASHING AT EXISTING ROOF EQUIPMENT CURB FOR WATERTIGHT EXHAUST FAN INSTALLATION.

B4 ROOF EXHAUST FAN
NTS

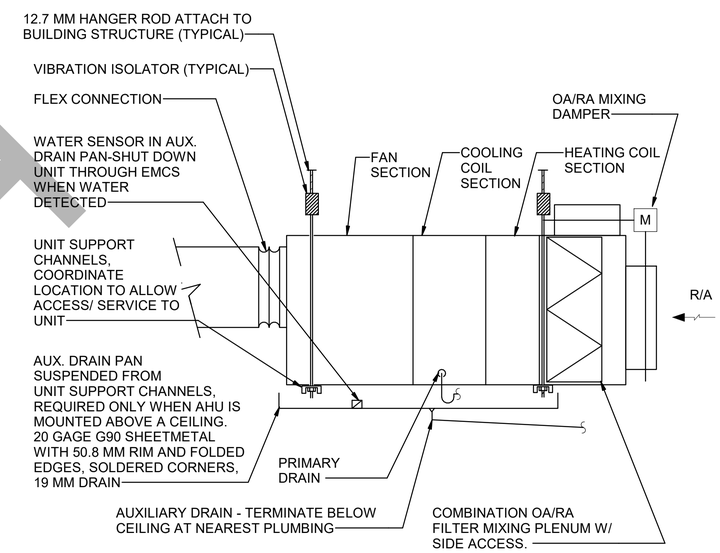

A8 FCU MOUNTING DETAIL
NTS

DRAFT

US Army Corps of Engineers
Japan District ®

FOR REVIEW ONLY
THESE DOCUMENTS ARE FOR CONCEPT DESIGN AND NOT INTENDED FOR CONSTRUCTION, BIDDING OR PERMIT PURPOSES. THEY WERE PREPARED BY, OR UNDER SUPERVISION OF:
BRIAN C. ALLERHEILIGEN
NAME
93876 09/04/2025
REGISTRATION # DATE
TEXAS REGISTERED ENGINEERING FIRM F-2966

MARK	DESCRIPTION	DATE

ISSUE DATE: 09/04/2025
SOLICITATION NO.:
CONTRACT NO.:
DRAWING CODE:
DESIGNED BY: K. WILKINS
DRAWN BY: C. WATERS
CHECKED BY: B. SCHNEIDER
SUBMITTED BY: A. GUERRA
SIZE: ISO A1
FILE NAME: M-501

US ARMY CORPS OF ENGINEERS
JAPAN ENGINEER DISTRICT
OKINAWA, JAPAN

Jacobs
JACOBS GOVERNMENT SERVICES COMPANY
777 MAIN STREET, FORT WORTH, TX 76102 USA

FY25 REPAIR HVAC WIDEBAND SATCOM OPS B100
CAMP BUCKNER COMMUNICATIONS ANNEX
OKINAWA, JAPAN
PROJECT NUMBER:D3449305
HVAC DETAILS

SHEET ID
M-501

M M-501-

FILE PATH: C:\Users\MOHAPPC\Documents\D3449305-M-3D_MOHAPPC.rvt
PLOT DATE: 8/29/2025 3:10:52 PM PLOTTED BY: PLOT SCALE: NTS

BACKCHECK SUBMITTAL DESIGN

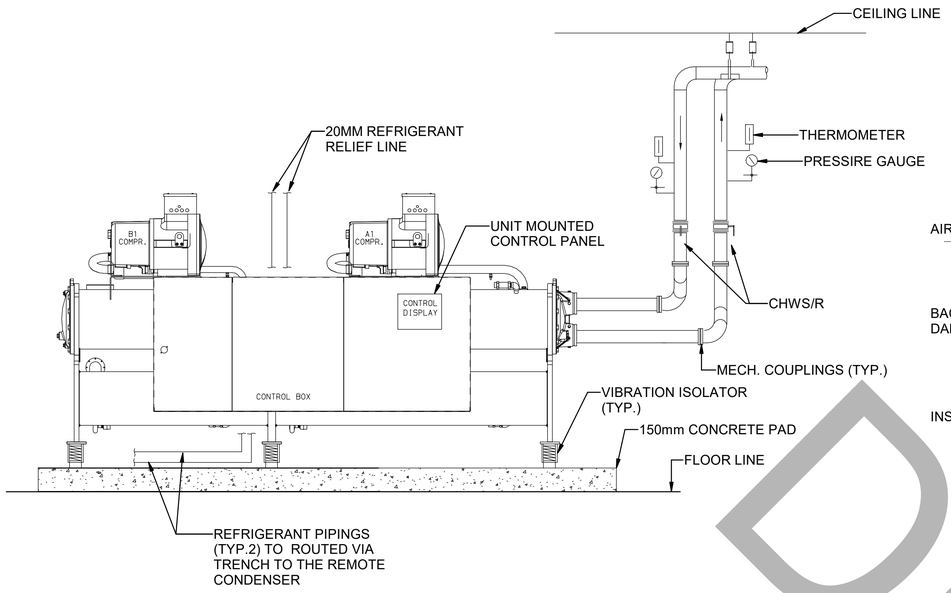

C1 CHILLER DETAIL
NTS

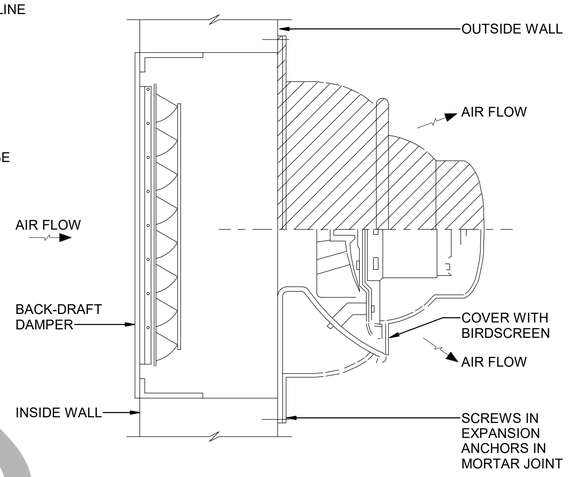

E5 WALL EXHAUST FAN
NTS

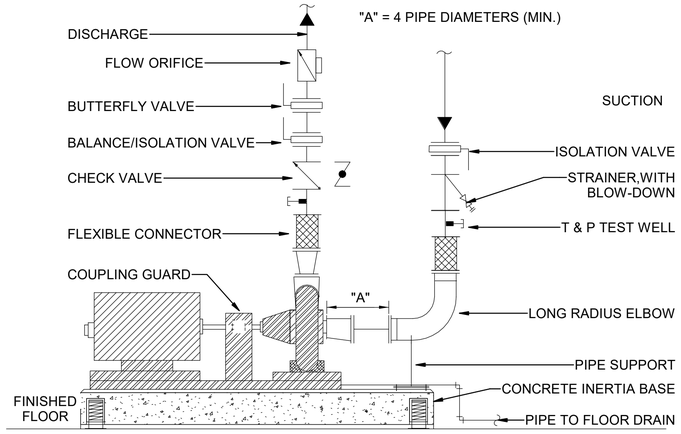

E8 END SUCTION PUMP
NTS

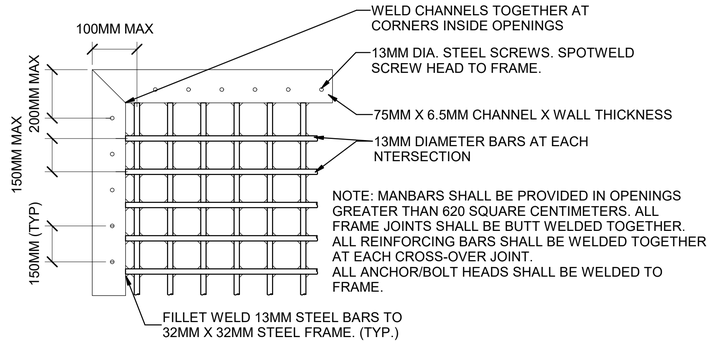

D7 CONTROLLED BOUNDARY MANBARS
1:10

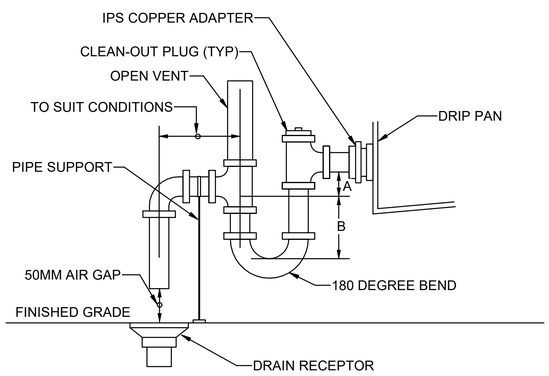

PIPE SUPPORT: SPLIT PIPE CLAMP, 10MM THREADED ROD

UNIT TYPE	A	B
DRAW THRU	50MM PLUS X	X
BLOW THRU	50MM MINIMUM	2X

WHERE X = STATIC PRESSURE (AHU TOTAL STATIC PRESSURE) IN DRAIN PAN

A1 AHU CONDENSATE DRAIN DETAIL
NTS

NOTES:

1. MAXIMUM OFFSET IN FLEXIBLE DUCT (NOT ALLOWED IN RETURN SYSTEMS) MUST NOT BE GREATER THAN 45 DEGREES, INCLUDING CONNECTIONS TO DIFFUSERS, REGISTERS OR GRILLES.

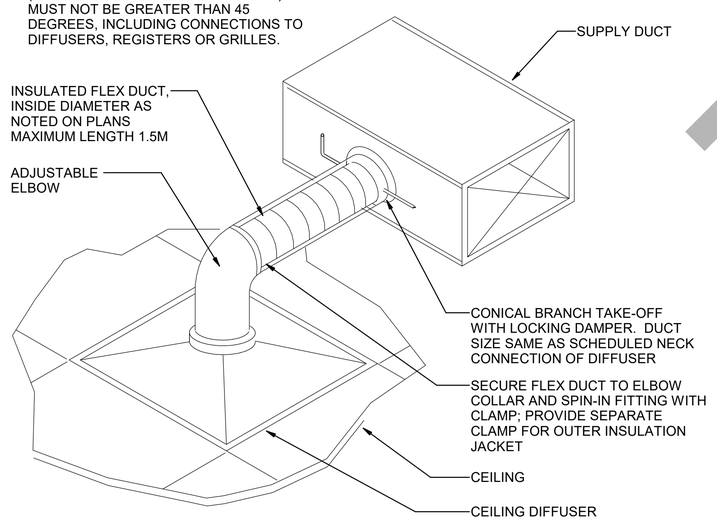

A4 SUPPLY CEILING DIFFUSER DETAIL
NTS

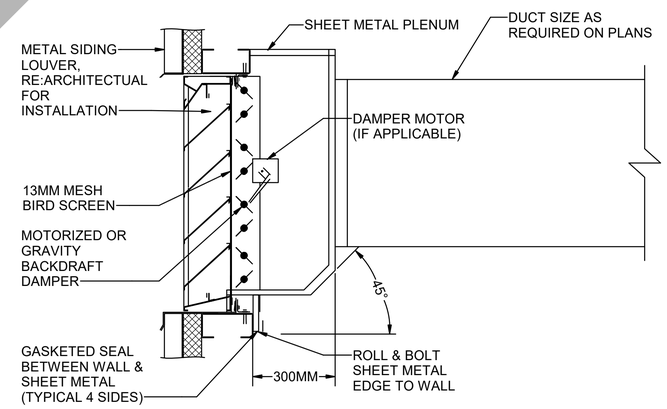

A7 INTAKE/DISCHARGE LOUVER DETAIL
NTS

DRAFT

US Army Corps of Engineers
Japan District ®

FOR REVIEW ONLY
THESE DOCUMENTS ARE FOR CONCEPT DESIGN AND NOT INTENDED FOR CONSTRUCTION, BIDDING OR PERMIT PURPOSES. THEY WERE PREPARED BY, OR UNDER SUPERVISION OF:
BRIAN C. ALLERHEILIGEN
NAME
93876 REGISTRATION # 09/04/2025 DATE
TEXAS REGISTERED ENGINEERING FIRM F-2966

MARK	DESCRIPTION	DATE

ISSUE DATE: 09/04/2025
SOLICITATION NO.:
CONTRACT NO.:
DRAWING CODE:
DESIGNED BY: K. WILKINS
DRAWN BY: C. WILKINS
CHECKED BY: B. SCHNEIDER
SUBMITTED BY: A. GUERRA
SIZE: ISO A1
FILE NAME: M-502

US ARMY CORPS OF ENGINEERS
JAPAN ENGINEER DISTRICT
OKINAWA, JAPAN

Jacobs
JACOBS GOVERNMENT SERVICES COMPANY
777 MAIN STREET, SUITE 1000 FORT WORTH, TX 76102 USA

FY25 REPAIR HVAC WIDEBAND SATCOM OPS B100
CAMP BUCKNER COMMUNICATIONS ANNEX
OKINAWA, JAPAN
PROJECT NUMBER:D3449305

HVAC DETAILS

SHEET ID
M-502

M M-502-

FILE PATH: C:\Users\MOHAPPC\Documents\D3449305-M-3D_MOHAPPC.rvt
PLOT DATE: 8/29/2025 3:10:53 PM PLOTTED BY: PLOT SCALE: As indicated

BACKCHECK SUBMITTAL DESIGN

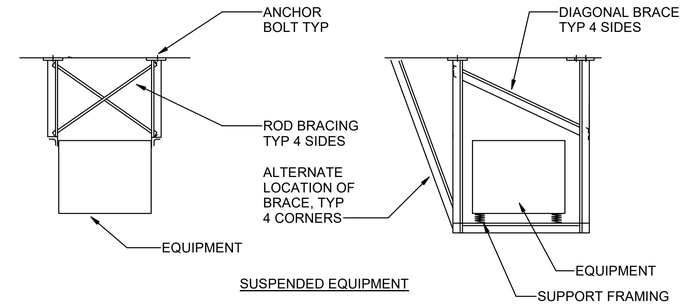

SUSPENDED EQUIPMENT

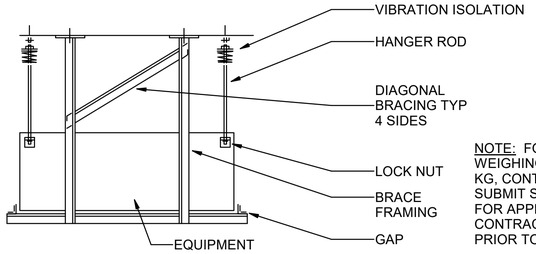

NOTE: FOR EQUIPMENT WEIGHING MORE THAN 14 KG, CONTRACTOR MUST SUBMIT SUPPORT DETAILS FOR APPROVAL BY CONTRACTING OFFICER PRIOR TO INSTALLATION.

SUSPENDED EQUIPMENT WITH VIBRATION MOUNT

D1 TYPICAL BRACING AND SUPPORTS FOR SUSPENDED EQUIPMENT

NTS

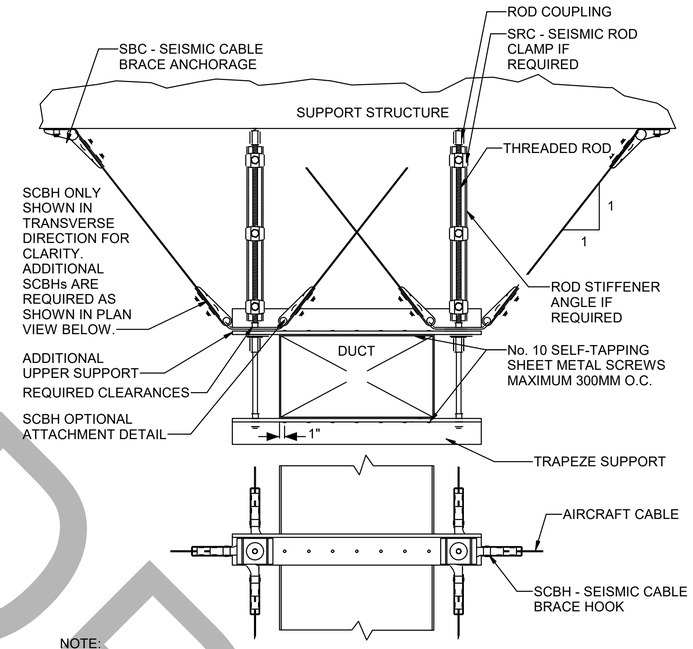

NOTE:
A ROD STIFFENER ANGLE MAY BE REQUIRED AS SHOWN. BRACE ANGLE RATIO MAY BE INCREASED TO 2(VERT.) : 1(HORIZ.).

D5 SEISMIC DETAILS FOR RECTANGULAR DUCTWORK

NTS

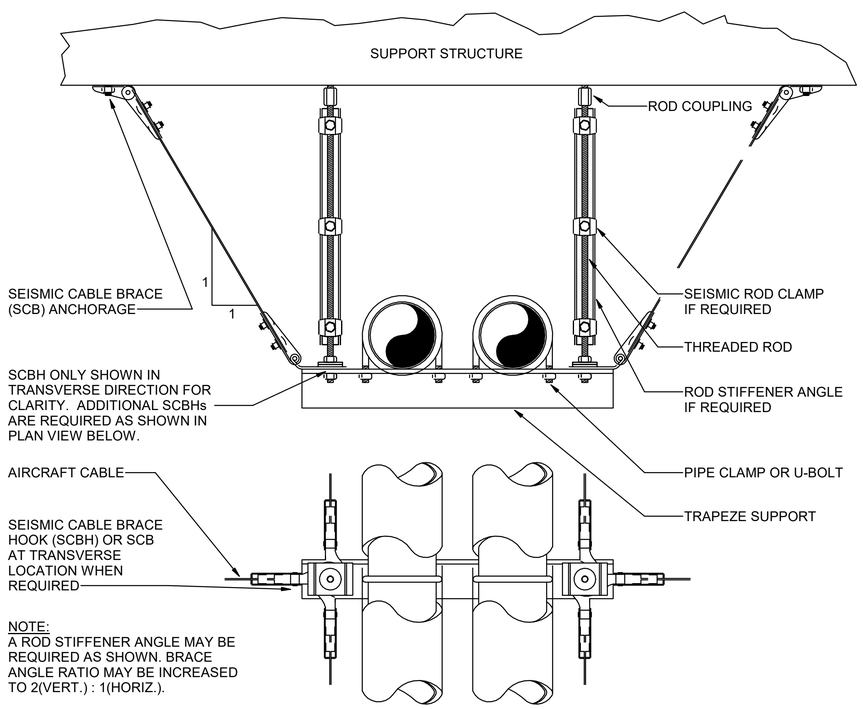

NOTE:
A ROD STIFFENER ANGLE MAY BE REQUIRED AS SHOWN. BRACE ANGLE RATIO MAY BE INCREASED TO 2(VERT.) : 1(HORIZ.).

A1 SEISMIC DETAILS FOR TRAPEZE SUPPORTED PIPE

NTS

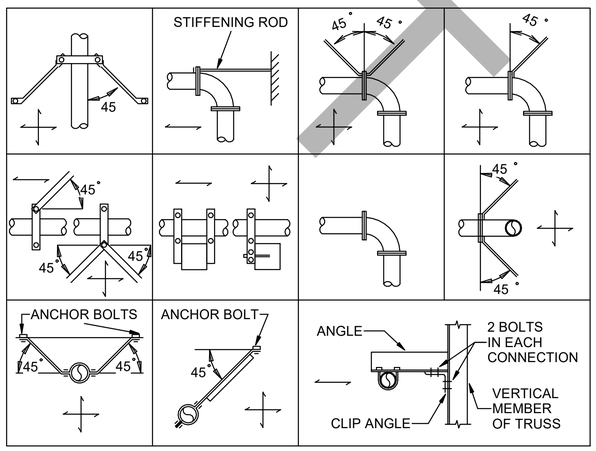

A5 SEISMIC DETAILS FOR SWAY BRACING

NTS

DRAFT

US Army Corps of Engineers
Japan District ®

FOR REVIEW ONLY
THESE DOCUMENTS ARE FOR CONCEPT DESIGN AND NOT INTENDED FOR CONSTRUCTION BIDDING OR PERMIT PURPOSES. THEY WERE PREPARED BY, OR UNDER SUPERVISION OF:
BRIAN C. ALLERHEILIGEN
NAME
93876 09/04/2025
REGISTRATION # DATE
TEXAS REGISTERED ENGINEERING FIRM F-2966

MARK	DESCRIPTION	DATE

ISSUE DATE: 09/04/2025
SOLICITATION NO.:
CONTRACT NO.:
DRAWING CODE:
DESIGNED BY: K. WILKINS
DRAWN BY: C. HAYNES
CHECKED BY: B. SCHNEIDER
SUBMITTED BY: A. GUERRA
SIZE: ISO A1
FILE NAME: M-503

US ARMY CORPS OF ENGINEERS
JAPAN ENGINEER DISTRICT
OKINAWA, JAPAN

Jacobs
JACOBS GOVERNMENT SERVICES COMPANY
777 MAIN STREET, FT. WORTH, TX 76102
USA

FY25 REPAIR HVAC WIDEBAND SATCOM OPS B100
CAMP BUCKNER COMMUNICATIONS ANNEX
OKINAWA, JAPAN
PROJECT NUMBER:D3449305

HVAC DETAILS

SHEET ID
M-503

M M-503-

FILE PATH: C:\Users\MOHAPPC\Documents\D3449305-M-3D_MOHAPPC.rvt
PLOT DATE: 8/29/2025 3:10:53 PM PLOTTED BY: PLOT SCALE: NTS

BACKCHECK SUBMITTAL DESIGN

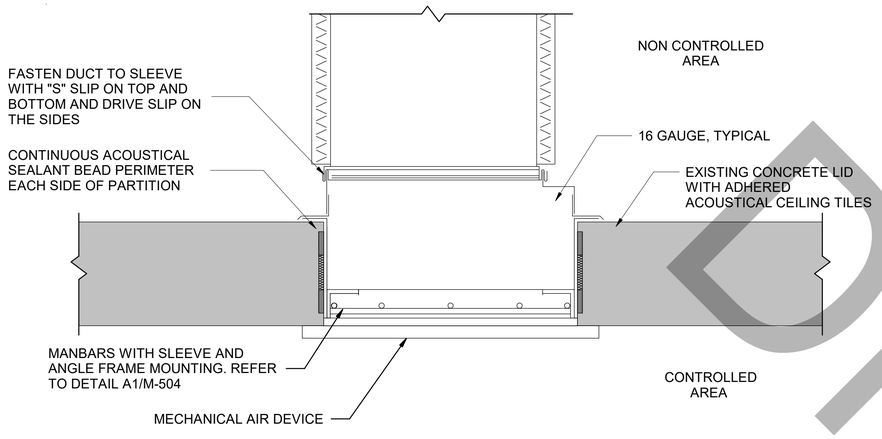

D1 ICD 705 SECURE PENETRATION DETAIL
1 : 10

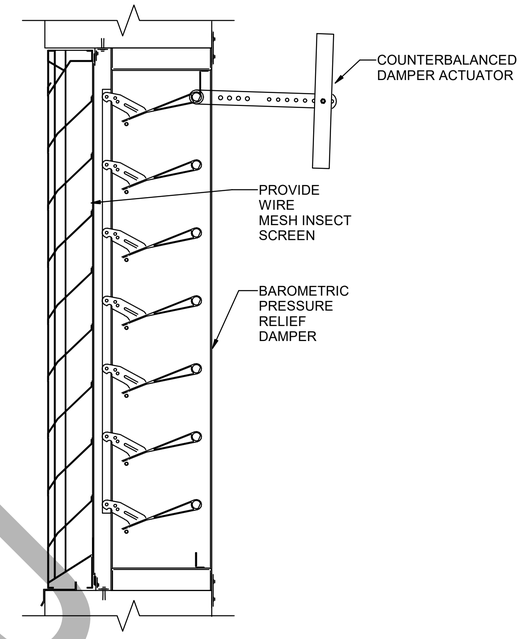

D6 TYPICAL LOUVER FOR BAROMETRIC PRESSURE RELIEF DETAIL
NTS

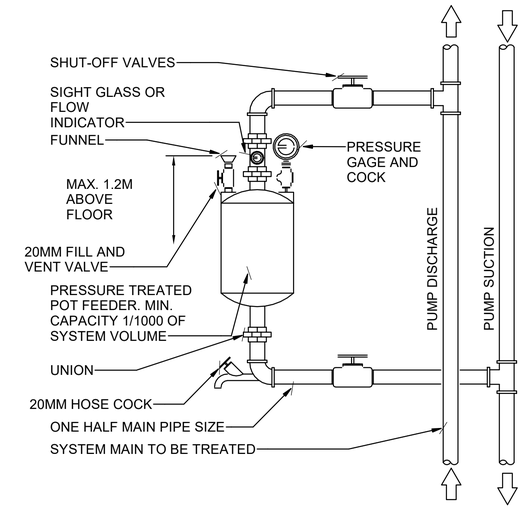

D8 CHEMICAL POT DETAIL
NTS

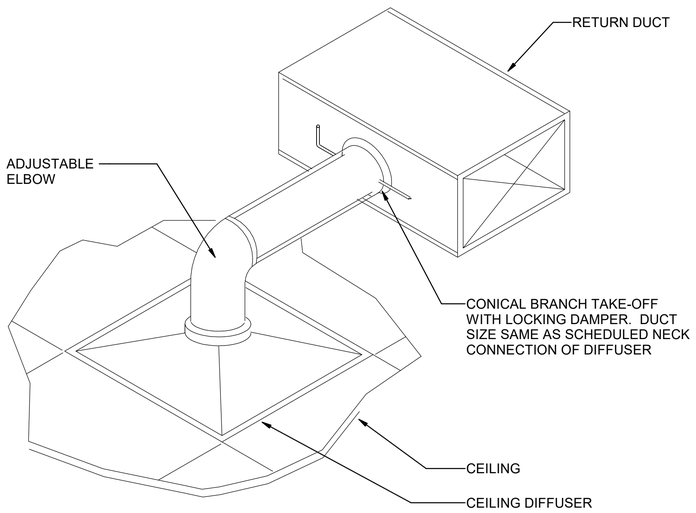

A1 RETURN CEILING DIFFUSER DETAIL
NTS

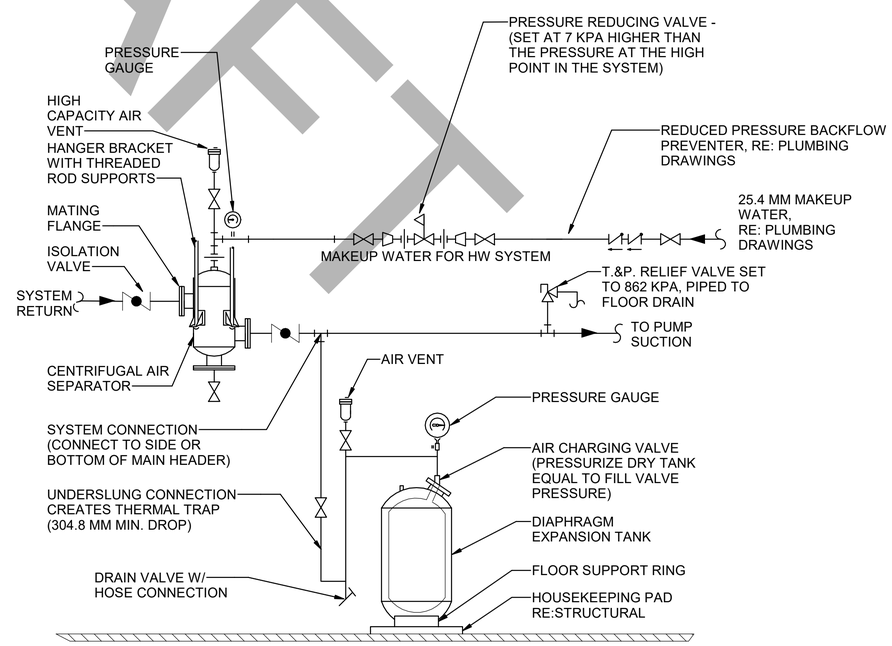

A6 AIR SEPARATOR AND EXPANSION TANK PIPING DETAIL
NTS

DRAFT

US Army Corps of Engineers
Japan District ®

FOR REVIEW ONLY
THESE DOCUMENTS ARE FOR CONCEPT DESIGN AND NOT INTENDED FOR CONSTRUCTION, BIDDING OR PERMIT PURPOSES. THEY WERE PREPARED BY, OR UNDER SUPERVISION OF:
BRIAN C. ALLERHEILIGEN (NAME)
93876 (REGISTRATION #) 09/04/2025 (DATE)
TEXAS REGISTERED ENGINEERING FIRM F-2966

MARK	DESCRIPTION	DATE

ISSUE DATE: 09/04/2025
SOLICITATION NO.:
CONTRACT NO.:
DRAWING CODE:
DESIGNED BY: K. WILKINS
DRAWN BY: C. WATERS
CHECKED BY: B. SCHNEIDER
SUBMITTED BY: A. GUERRA
SIZE: ISO A1
FILE NAME: M-504

US ARMY CORPS OF ENGINEERS
JAPAN ENGINEER DISTRICT
OKINAWA, JAPAN
Jacobs
JACOBS GOVERNMENT SERVICES COMPANY
777 MAIN STREET, FORT WORTH, TX 76102 USA

FY25 REPAIR HVAC WIDEBAND SATCOM OPS B100
CAMP BUCKNER COMMUNICATIONS ANNEX
OKINAWA, JAPAN
PROJECT NUMBER:D3449305
HVAC DETAILS

SHEET ID
M-504

M M-504-

FILE PATH: C:\Users\MOHAPPC\Documents\D3449305-M-3D_MOHAPPC.rvt
PLOT DATE: 8/29/2025 3:10:54 PM PLOTTED BY: PLOT SCALE: As indicated

BACKCHECK SUBMITTAL DESIGN

AIR HANDLING UNIT SCHEDULE

UNIT MARK	LOCATION	TYPE	ESP (Pa)	SUPPLY FAN					HEATING COIL			COOLING COIL									ELECTRICAL DATA				MCA	MOCP	NOTES
				TOTAL SP (Pa)	QUANTITY	FAN HP	AIR FLOW (L/s)	OUTSIDE AIR (L/S)	TOTAL CAP (kW)	EA DB (°C)	LA DB (°C)	TOTAL CAP (kW)	SENSIBLE CAPACITY (kW)	EA DB (°C)	EA WB (°C)	LA DB (°C)	LA WB (°C)	EWT (°C)	LWT (°C)	FLOW (L/s)	MOTOR HP	VOLTAGE	PHASE	FREQUENCY			
AHU-1	114 VAULT	CHILLED WATER VAV AIR HANDLING UNIT	373.26	746.52	1	1.5	590	165	5	20	26.9	12.3	9.62	26.7	18.8	12.4	12.36	5.5	12.2	0.4	5	480	3	60	8	15	2, 3
AHU-2	118 MECHANICAL ROOM	DX SPLIT SYSTEM AIR HANDLING UNIT	248.8	870.94	1	3	2360	247.8	33 (HEAT PUMP)	20	32	35.6	27.6	25.8	18.8	15.7	14.44	-	-	-	2.4	460	3	60	10	15	1, 2, 3

NOTES:

1. REFER TO M-602 FOR CONDENSING UNIT SCHEDULE.
2. PROVIDE SINGLE POINT POWER CONNECTION.
3. PROVIDE FACTORY MOUNTED VARIABLE FREQUENCY DRIVE WITH INTEGRAL DISCONNECT ON AHU-1.
4. PROVIDE MERV-13 FILTERS.
5. PROVIDE SMOKE DETECTORS AS INDICATED BY CONTROL DIAGRAMS.

DEDICATED OUTDOOR AIR HANDLING UNIT SCHEDULE

UNIT MARK	LOCATION	TYPE	SUPPLY FAN				ELECTRIC HEAT			COOLING COIL								REHEAT CAPACITY (KW)	ELECTRICAL DATA		MCA	MOCP	ELECTRICAL DATA	NOTES
			AIR FLOW (L/s)	EXTERNAL SP (Pa)	QUANTITY	HP PER FAN	TOTAL CAP (kW)	EA DB (°C)	LA DB (°C)	TOTAL CAP (kW)	EA DB (°C)	EA WB (°C)	LA DB (°C)	LA WB (°C)	EWT (°C)	LWT (°C)	FLOW (L/s)		VOLTAGE	PHASE			FREQUENCY	
DOAS-1	120 A/C ROOM	CHILLED WATER DEDICATED OUTDOOR AIR UNIT	372.8	249	2	0.5	8.0	10.2	20.5	27.5	30	29.2	14.4	12.1	5.5	12.2	1.6	0.734	480	3	8	10	60	
DOAS-2	118 MECHANICAL ROOM	DX SPLIT DEDICATED OUTDOOR AIR UNIT	247.8	199	1	1	2	10.2	24.9	18.3	30	29.2	14.4	12.1	-	-	-	3	460	3	6.5	11	60	1

NOTES:

1. DX COOLING UNIT. REFER TO M-602 FOR CONDENSING UNIT SCHEDULE.
2. PROVIDE 10,000 HOUR SALT SPRAY COATING ON COILS, CABINET CASINGS, AND INTERNAL COMPONENTS.

CHILLER SCHEDULE

MARK	LOCATION	TYPE	REFRIGERANT	OPERATING CAPACITY (kW)	FLOW RATE (L/s)	EWT (°C)	LWT (°C)	DIMENSIONS (mm)			V/PH/HZ	MCA	MOCP	CONTROL CIRCUIT POWER	NOTES
								LENGTH	WIDTH	HEIGHT					
CH-1	120 A/C ROOM	AIR COOLED PARALLEL WITH MANIFOLDED PUMPS	R-513A	470	16.8	12.22	5.5	3403	838.2	1651	460/3/60	291.3	400	120/1/60	1
CH-2	120 A/C ROOM	AIR COOLED PARALLEL WITH MANIFOLDED PUMPS	R-513A	470	16.8	12.22	5.5	3403	838.2	1651	460/3/60	291.3	400	120/1/60	1

NOTES:

1. REFER TO M-602 FOR CONDENSING UNIT SCHEDULE.

COMPUTER ROOM AIR CONDITIONING UNIT SCHEDULE

MARK	LOCATION	UNIT TYPE	AIRFLOW (L/s)	SUPPLY FAN SECTION					COOLING COIL										ELECTRIC HEATING COIL			FILTER TYPE	ELECTRICAL				MAX UNIT SIZE (mm)			WEIGHT (kg)	NOTES
				FAN TYPE	FAN QTY.	POWER (hp) PER FAN	ESP (Pa)	MOTOR FLA PER FAN	NET TOTAL CAPACITY (kW)	NET TOTAL SENSIBLE CAPACITY (kW)	EWT (°C)	LWT (°C)	FLOW (L/S)	EAT (°C) DB/WB	COIL PRESSURE DROP (Pa)	LAT (°C) DB	FACE VELOCITY (m/s)	ROWS	CAPACITY (kW)	EAT (°C)	LAT (°C)		VOLT/PHASE	HERTZ	MCA	SCCR	LENGTH	WIDTH	HEIGHT		
CRAC-1	108 TECHNICAL EQUIPMENT ROOM	FLOOR MOUNTED DOWNFLOW, TOP RETURN	4720.0	BACKWARD INCLINE DIRECT DRIVE EC	2	4.7	124.5	4.7	69.4	50.3	5.5	12.2	2.6	21.1/16.1	15543.1	12.3	1.62	4	22.5	12.3	16.2	MERV 8, 4"	460/3	60	41.1	65	1966	1023	1935	680	2,3
CRAC-2	108 TECHNICAL EQUIPMENT ROOM	FLOOR MOUNTED DOWNFLOW, TOP RETURN	4720.0	BACKWARD INCLINE DIRECT DRIVE EC	2	4.7	124.5	4.7	69.4	50.3	5.5	12.2	2.6	21.1/16.1	15543.1	12.3	1.62	4	22.5	12.3	14.9	MERV 8, 4"	460/3	60	41.1	65	1966	1023	1935	680	2,3
CRAC-3	108 TECHNICAL EQUIPMENT ROOM	FLOOR MOUNTED DOWNFLOW, TOP RETURN	4720.0	BACKWARD INCLINE DIRECT DRIVE EC	2	4.7	124.5	4.7	69.4	50.3	5.5	12.2	2.6	21.1/16.1	15543.1	12.3	1.62	4	22.5	12.3	14.9	MERV 8, 4"	460/3	60	41.1	65	1966	1023	1935	680	2,3
CRAC-4	108 TECHNICAL EQUIPMENT ROOM	FLOOR MOUNTED DOWNFLOW, TOP RETURN	4720.0	BACKWARD INCLINE DIRECT DRIVE EC	2	4.7	124.5	4.7	69.4	50.3	5.5	12.2	2.6	21.1/16.1	15543.1	12.3	1.62	4	22.5	12.3	16.2	MERV 8, 4"	460/3	60	41.1	65	1966	1023	1935	680	2,3
CRAC-5	108 TECHNICAL EQUIPMENT ROOM	FLOOR MOUNTED DOWNFLOW, TOP RETURN	4720.0	BACKWARD INCLINE DIRECT DRIVE EC	2	4.7	124.5	4.7	69.4	50.3	5.5	12.2	2.6	21.1/16.1	15543.1	12.3	1.62	4	22.5	12.3	16.2	MERV 8, 4"	460/3	60	41.1	65	1966	1023	1935	680	1,2,3
CRAC-6	108 TECHNICAL EQUIPMENT ROOM	FLOOR MOUNTED DOWNFLOW, TOP RETURN	4720.0	BACKWARD INCLINE DIRECT DRIVE EC	2	4.7	124.5	4.7	69.4	50.3	5.5	12.2	2.6	21.1/16.1	15543.1	12.3	1.62	4	22.5	12.3	16.2	MERV 8, 4"	460/3	60	41.1	65	1966	1023	1935	680	1,2,3
CRAC-7	108 TECHNICAL EQUIPMENT ROOM	FLOOR MOUNTED DOWNFLOW, TOP RETURN	4720.0	BACKWARD INCLINE DIRECT DRIVE EC	2	4.7	124.5	4.7	69.4	50.3	5.5	12.2	2.6	21.1/16.1	15543.1	12.3	1.62	4	22.5	12.3	16.2	MERV 8, 4"	460/3	60	41.1	65	1966	1023	1935	680	2,3
CRAC-8	122 UPS & BATTERY	FLOOR MOUNTED UPFLOW, FRONT RETURN	4720.0	BACKWARD INCLINE DIRECT DRIVE EC	2	4.7	124.5	4.7	69.4	50.3	5.5	12.2	2.6	21.1/16.1	15543.1	12.3	1.62	4	22.5	12.3	16.2	MERV 8, 4"	460/3	60	41.1	65	1966	1023	2237	680	

NOTES:

1. PROVIDE WITH CONDENSATE PUMP.
2. CRAC-1 THROUGH CRAC-7 ARE N+2 CONFIGURATION.
3. ADD RADIUS ELBOW WITH TURNING VANES BELOW THE RAISED FLOOR.

PUMP SCHEDULE

MARK	LOCATION	TYPE	SERVICE	FLOW (L/s)	TDH (KPA)	PUMP RPM	MOTOR HP	MOTOR BHP	V/PH/HZ	NOTES
CWP-1	120 A/C ROOM	CLOSE COUPLED END SUCTION	CH-1	16.8	305	3600	15	9.08	460/3/60	
CWP-2	120 A/C ROOM	CLOSE COUPLED END SUCTION	CH-2	16.8	305	3600	15	9.08	460/3/60	

DUCTWORK CONSTRUCTION AND LEAKAGE TESTING TABLE

SYSTEM	DUCT PRESSURE CLASS (Pa)			SUPPLY/OUTSIDE AIR				RETURN/EXHAUST AIR		DUCT TEST PRESSURE (Pa)	NOTES
				ROUND		RECTANGULAR					
	SUPPLY DUCT	RETURN DUCT	EXHAUST DUCT	DUCT SEAL CLASS	DUCT LEAK CLASS	DUCT SEAL CLASS	DUCT LEAK CLASS	DUCT SEAL CLASS	DUCT LEAK CLASS		
DOAS-1	450	--	--	A	4	A	8	--	--	450	1
DOAS-2	150	--	--	A	8	A	16	--	--	150	1
AHU-1	450	-300	--	A	4	A	8	A	8	450	1
AHU-2	300	-150	--	A	8	A	16	--	--	300	1
EXHAUST FANS	--	--	-150	--	--	--	--	A	8	150	1

NOTES:

1. TEST IN ACCORDANCE WITH UFGS 23 05 93, TESTING, ADJUSTING, AND BALANCING FOR HVAC AND THE PROCEDURES IN SMACNA HVAC AIR DUCT LEAKAGE TEST MANUAL.

DRAFT

US Army Corps of Engineers
Japan District ®

FOR REVIEW ONLY

THESE DOCUMENTS ARE FOR CONCEPT DESIGN AND NOT INTENDED FOR CONSTRUCTION, BIDDING OR PERMIT PURPOSES. THEY WERE PREPARED BY, OR UNDER SUPERVISION OF:

BRIAN C. ALLERHEILIGEN
NAME
93876 09/04/2025
REGISTRATION # DATE
TEXAS REGISTERED ENGINEERING FIRM F-2966

MARK	DESCRIPTION	DATE

ISSUE DATE: 09/04/2025
SOLICITATION NO.:
CONTRACT NO.:
DRAWING CODE:

DESIGNED BY: K. WILKINS
DRAWN BY: C. WILKINS
CHECKED BY: B. SCHNEIDER
SUBMITTED BY: A. GUERRA
SIZE: ISO A1
FILE NAME: M-601

US ARMY CORPS OF ENGINEERS
JAPAN ENGINEER DISTRICT
OKINAWA, JAPAN

Jacobs
JACOBS GOVERNMENT SERVICES COMPANY
777 MAIN STREET, FT. WORTH, TX 76102
USA

FY25 REPAIR HVAC WIDEBAND SATCOM OPS B100
CAMP BUCKNER COMMUNICATIONS ANNEX
OKINAWA, JAPAN
PROJECT NUMBER:D3449305

HVAC SCHEDULES

SHEET ID
M-601

M M-601-

FILE PATH: C:\Users\MOHAPPC\Documents\D3449305-M-3D_MOHAPPC.rvt
PLOT DATE: 8/29/2025 3:10:55 PM PLOTTED BY: PLOT SCALE:

BACKCHECK SUBMITTAL DESIGN

EXHAUST FAN SCHEDULE

MARK	LOCATION	AREA SERVED	TYPE	FAN ESP (Pa)	FAN DRIVE TYPE	FAN RPM	OPERATING WEIGHT (KG)	FAN CAP (L/s)	MOTOR MOTOR HP	MOTOR V/PH/HZ	MCA	MOCP	NOTES
EF-1	ADMIN BLDG. ROOF	111 WOMEN'S TOILET	CENTRIFUGAL ROOF MOUNTED UPBLAST	31.1	DIRECT	1050	23.5	76	1/100	115/1/60	0.08	15	1,2
EF-2	ADMIN BLDG. ROOF	112 MEN'S TOILET	CENTRIFUGAL ROOF MOUNTED UPBLAST	31.1	DIRECT	734	25.8	123	1/6	115/1/60	3.5	15	1,2
EF-3	ADMIN BLDG. ROOF	113 JANITOR	CENTRIFUGAL ROOF MOUNTED UPBLAST	24.8	DIRECT	887	22.2	24	1/15	115/1/60	1.6	15	1,2
EF-4	ADMIN BLDG. ROOF	119 ELEC ROOM	CENTRIFUGAL ROOF MOUNTED UPBLAST	24.8	DIRECT	887	22.2	24	1/15	115/1/60	1.6	15	1,2
EF-5	OPS BLDG. TOILET	TOILET	IN-LINE	62.2	DIRECT	1300	12.7	24	1/50	115/1/60	0.15	15	2
EF-6	OPS BLDG. EAST EXT. WALL	122 UPS & BATTERY ROOM	CENTRIFUGAL WALL MOUNTED	124	DIRECT	1139	34.9	680	1/2	115/1/60	8.2	15	1

NOTES:

1. PROVIDE 10,000 HOUR SALT SPRAY COATING FOR ROOF MOUNTED FANS.
2. PROVIDE FAN WITH ECM MOTOR.

AIR DEVICE SCHEDULE

MARK	SERVICE	DESCRIPTION	FACE SIZE (mm)	NECK SIZE (mm)	MAX. PRESSURE DROP (Pa)	MAXIMUM THROW (M)	MAXIMUM FLOW (L/S)	MAXIMUM NOISE CRITERIA
RG-1	AHU-1 RETURN	PERFORATED CEILING	600 x 600	300 x 300	36.0 Pa	--	250	17
SD-1	AHU-1 SUPPLY	3 CONE LAY IN	600 x 600	200	18.0 Pa	2.3	122	19
SD-2	AHU-1 SUPPLY	3 CONE LAY IN	600 x 600	250	18.0 Pa	2.8	198	22
SD-3	AHU-1 SUPPLY	3 CONE SURFACE MOUNT	300 x 300	200	20.0 Pa	2.3	122	19

VAV SCHEDULE

MARK	TYPE	AREA SERVED	AIRFLOW (L/S)	INLET SIZE (MM)	SERVICE	REHEAT CAP (KW)	MIN FLOW (L/S)	V/PH
VAV-1	SINGLE DUCT	113 PLL	140	152	AHU-1	0.676	46.7	208/1
VAV-2	SINGLE DUCT	112 CLASSROOM	280	203	AHU-1	1.35	93.3	208/1
VAV-3	SINGLE DUCT	111 ISSO OFFICE	90	152	AHU-1	0.435	30	208/1
VAV-4	SINGLE DUCT	110 OPERATION OFFICE	175	152	AHU-1	0.645	58.3	208/1
VAV-5	SINGLE DUCT	115 MAINT. OFFICE, 114 VAULT	220	203	AHU-1	1.06	73.3	208/1

DX FAN COIL UNIT SCHEDULE

MARK	LOCATION, MOUNTING	AIRFLOW (L/s)	COOLING CAPACITY TOTAL CAPACITY (kW)	COOLING CAPACITY SENSIBLE CAPACITY (kW)	COOLING CAPACITY EAT DB/WB (°C)	HEATING CAPACITY (kW)	ELECTRICAL VOLT/PHASE	WEIGHT (kg)	NOTES
FCU-2	111 WOMEN'S TOILET/SHOWER, WALL MOUNTED	285	6.5	4.8	22.0/15.71	6.9	208/1	13.8	2
FCU-3	117 COMM ROOM, WALL MOUNTED	150	3.5	2.8	26.6/19.4	--	208/1	9.5	1,2,3,4
FCU-4	104 CONFERENCE ROOM, CEILING CASSETTE	166	3.16	2.47	26.6/19.4	3.9	208/1	16.3	1,2
FCU-5	112 MEN'S TOILET/SHOWER, WALL MOUNTED	285	6.5	4.8	22.0/15.71	6.9	208/1	13.8	2

NOTES:

1. PROVIDE WITH CONDENSATE PUMP.
2. UNIT POWERED BY CORRESPONDING OUTDOOR UNIT.
3. PROVIDE COOLING ONLY UNIT.
4. PROVIDE WITH INTERNAL THERMOSTAT.

HYDRONIC FAN COIL UNIT SCHEDULE

MARK	LOCATION	AIRFLOW (L/S)	E.S.P. (PA)	CHILLED WATER COOLING COIL TOTAL CAPACITY (KW)	SENSIBLE CAPACITY (KW)	EAT DB/WB (°C)	LAT DB/WB (°C)	EWT (°C)	LWT (°C)	FLOW (L/S)	WPD (KPA)	FAN MOTOR (KW)	UNIT MCA	VOLT / PHASE	UNIT WEIGHT (KG)
FCU-1	OPS BLDG. ENTRY	297	191.6	9.24	6.37	25.5/19.0	13.9/13.0	5.56	12.22	0.328	11.7	0.60	25.7	230/1	266

CONDENSING UNIT SCHEDULE

MARK	LOCATION	SERVICE	TOTAL CAPACITY (kW)	ELECTRICAL VOLT/PHASE	ELECTRICAL MCA	ELECTRICAL MOCP	MAX UNIT SIZE (mm) L	MAX UNIT SIZE (mm) W	MAX UNIT SIZE (mm) H	WEIGHT (kg)	AMBIENT OUTDOOR AIR (°C)	NOTES
CU-1	121 MECHANICAL YARD	CH-1	637.25	460/3/60	98.05	100	6248	2235	2515	2424	35.2	2,4
CU-2	121 MECHANICAL YARD	CH-2	637.25	460/3/60	98.05	100	6248	2235	2515	2424	35.2	2,4
CU-4	NORTH EXTERIOR ADMIN BLDG.	FCU-2	6.5	208/1/60	14.23	20	930	350	698	45.8	35.2	1,2,3
CU-5	NORTH EXTERIOR ADMIN BLDG.	AHU-2	35.2	460/3/60	19	25	1433	1166	1280	235.4	35.2	2,3
CU-6	NORTH EXTERIOR ADMIN BLDG.	DOAS-2	8.8	460/3/60	6.5	10	1425	1156	737	174	35.2	2,3
CU-7	NORTH EXTERIOR ADMIN BLDG.	FCU-3	10.6	208/1/60	9.15	15	673	285	550	27.2	35.2	1,2,3
CU-8	NORTH EXTERIOR ADMIN BLDG.	FCU-4	10.6	208/1/60	7.7	15	673	285	550	28.5	35.2	1,2,3
CU-9	NORTH EXTERIOR ADMIN BLDG.	FCU-5	6.5	208/1/60	14.23	20	930	350	698	45.8	35.2	1,2,3

NOTES:

1. UNIT POWERS ASSOCIATED INDOOR UNIT.
2. PROVIDE 10,000 HOUR SALT SPRAY CORROSSION RESISTANT COATINGS.
3. PROVIDE ALL MANUFACTURER'S RECOMMENDED PIPING SPECIALTIES. PIPE SIZING, ROUTING AND DESIGN PER MANUFACTURER'S REQUIREMENTS.
4. CONNECT TO EXISING PIPING IN MECHANICAL ROOM.

EXPANSION TANK SCHEDULE

MARK	SERVICE	VOLUME (L)	MIN. ACCEPTENCE VOLUME (L)	MIN. OPERATING TEMP (ºC)	MAX. OPERATING TEMP (°C)	MIN. FILL PRESSURE (kPA)	RELIEF PRESSURE (PA)	MAX. DIMENSIONS - DIA x H (MM)	MAX. OPERATING WEIGHT (KG)	TYPE
ET-1	CHILLED WATER	53	53	4.44	115.6	172.4	689.5	390 x 629	11	DIAPHRAGM

CHEMICAL FEEDER SCHEDULE

MARK	LOCATION	SERVICE	VOLUME (L)	MOUNTING	MAX WEIGHT (KG)
CF-1	120 A/C ROOM	CHILLED WATER	19	IN PIPE	18

AIR SEPARATOR SCHEDULE

MARK	LOCATION	SERVICE	FLOW (L/S)	PIPE CONN. (MM)	MAX DIMENSIONS DIA x H (MM)	PRESSURE DROP (MM)	MAX WEIGHT (KG)
AS-1	120 A/C ROOM	CHILLED WATER	15.57	100	520.7 x 798.5	67	216

LOUVER SCHEDULE

MARK	LOCATION	UNIT SIZE (MM)	MAXIMUM FLOW (L/S)	MAX. PRESSURE DROP (PA)	MAX FREE AREA VELOCITY (M/S)
L-1	122 UPS & BATTERY ROOM	915 W x 460 H x 150 D	538	25	3.5
L-2	120 A/C ROOM	01015 W x 460 H x 150 D	637	27	3.7
BRL-1	108 TECHNICAL EQUIPMENT ROOM	305 W x 460 H	344	19	-

DRAFT

US Army Corps of Engineers
Japan District ®

FOR REVIEW ONLY
THESE DOCUMENTS ARE FOR CONCEPT DESIGN AND NOT INTENDED FOR CONSTRUCTION, BIDDING OR PERMIT PURPOSES. THEY WERE PREPARED BY, OR UNDER SUPERVISION OF:
BRIAN C. ALLERHEILIGEN
NAME
93876 REGISTRATION # 09/04/2025 DATE
TEXAS REGISTERED ENGINEERING FIRM F-2966

MARK	DESCRIPTION	DATE

ISSUE DATE: 09/04/2025
SOLICITATION NO.:
CONTRACT NO.:
DRAWING CODE:
DESIGNED BY: K. WILKINS
DRAWN BY: C. HAYES
CHECKED BY: B. SCHNEIDER
SUBMITTED BY: A. GUERRA
SIZE: ISO A1
FILE NAME: M-602

US ARMY CORPS OF ENGINEERS
JAPAN ENGINEER DISTRICT
OKINAWA, JAPAN

Jacobs
JACOBS GOVERNMENT SERVICES COMPANY
777 MAIN STREET / FORT WORTH, TX 76102 USA

FY25 REPAIR HVAC WIDEBAND SATCOM OPS B100
CAMP BUCKNER COMMUNICATIONS ANNEX
OKINAWA, JAPAN
PROJECT NUMBER:D3449305

HVAC SCHEDULES

SHEET ID
M-602

FILE PATH: C:\Users\MOHAPPC\Documents\D3449305-M-3D_MOHAPPC.rvt
PLOT DATE: 8/29/2025 3:10:56 PM PLOTTED BY: PLOT SCALE:

BACKCHECK SUBMITTAL DESIGN

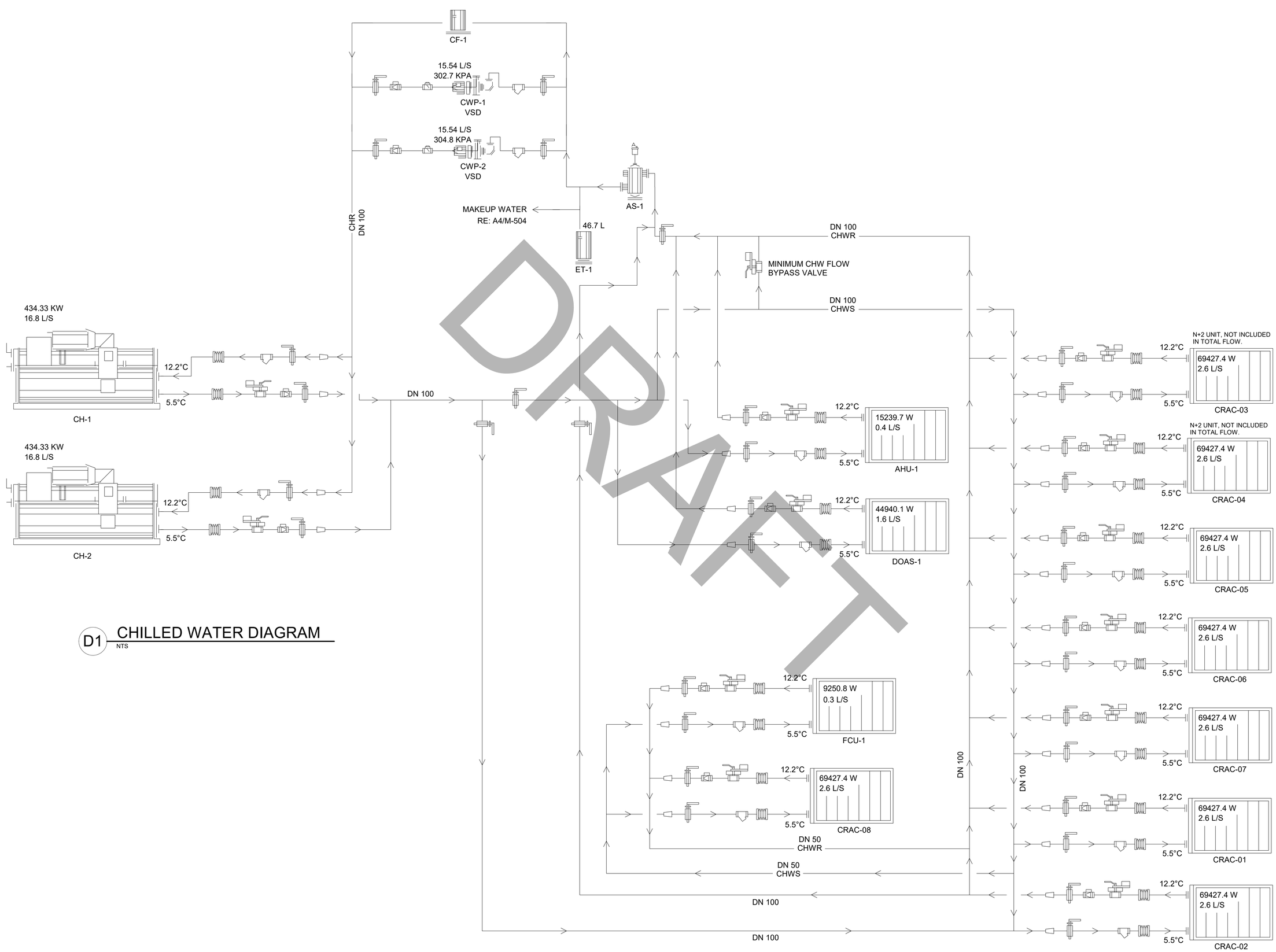

D1 CHILLED WATER DIAGRAM
NTS

DRAFT

US Army Corps of Engineers
Japan District ®

FOR REVIEW ONLY

THESE DOCUMENTS ARE FOR CONCEPT DESIGN AND NOT INTENDED FOR CONSTRUCTION, BIDDING OR PERMIT PURPOSES. THEY WERE PREPARED BY, OR UNDER SUPERVISION OF:

BRIAN C. ALLERHEILIGEN
NAME
93876 REGISTRATION # 09/04/2025 DATE
TEXAS REGISTERED ENGINEERING FIRM F-2966

MARK	DESCRIPTION	DATE

ISSUE DATE: 09/04/2025
SOLICITATION NO.:
CONTRACT NO.:
DRAWING CODE:

DESIGNED BY: K. WILKINS
DRAWN BY: C. HUFFMAN
CHECKED BY: B. SCHNEIDER
SUBMITTED BY: A. GUERRA
SIZE: ISO A1
FILE NAME: M-701

US ARMY CORPS OF ENGINEERS
JAPAN ENGINEER DISTRICT
OKINAWA, JAPAN

Jacobs
JACOBS GOVERNMENT SERVICES COMPANY
777 MAIN STREET, FORT WORTH, TX 76102
USA
JGS-D0000000

FY25 REPAIR HVAC WIDEBAND SATCOM OPS B100
CAMP BUCKNER COMMUNICATIONS ANNEX
OKINAWA, JAPAN
PROJECT NUMBER:D3449305

CHILLED WATER DIAGRAM

SHEET ID
M-701

M M-701-

FILE PATH: C:\Users\MOHAPPC\Documents\D3449305-M-3D_MOHAPPC.rvt
PLOT DATE: 8/29/2025 3:10:57 PM PLOTTED BY: PLOT SCALE: NTS

BACKCHECK SUBMITTAL DESIGN

CONTROLS LEGEND

(ALL SYMBOLS SHOWN ARE NOT NECESSARILY USED ON THE DRAWINGS)

CONTROLS SYMBOLS

- CENTRIFUGAL FAN
- PLENUM FAN
- PUMP
- HYDRONIC COIL
- GAS COIL
- DX COIL
- ELECTRIC COIL
- EVAPORATIVE COOLING COIL
- DIFFERENTIAL PRESSURE SWITCH
- DIFFERENTIAL PRESSURE TRANSMITTER
- LOUVER
- DAMPER
- DAMPER OPPOSED BLADE
- FILTER
- WALL THERMOSTAT
- TEMPERATURE SENSOR
- PIPE WELL TEMPERATURE SENSOR
- AIRFLOW SENSOR
- AIRFLOW MEASURING STATION
- SMOKE DETECTOR
- FREEZE STAT
- HUMIDIFIER
- DX — DX WITH CONDENSER REHEAT (RS, RL, HG, HP)

- ROOM THERMOSTAT
- ROOM HUMIDISTAT
- TEMPERATURE SENSOR
- HYDROGEN SENSOR
- DUCT SMOKE DETECTOR
- FLOW SENSOR
- FREEZESTAT
- FLOW SWITCH
- RELAY
- ELECTRIC MOTOR
- LEVEL TRANSMITTER
- VIBRATION SWITCH
- DUCT HUMIDITY SENSOR/TRANSMITTER
- PRESSURE TRANSMITTER
- MOTOR STARTER (LOCAL OR MCC)
- STATIC PRESSURE SENSOR/TRANSMITTER
- DIFFERENTIAL PRESSURE SENSOR/TRANSMITTER
- DIFFERENTIAL PRESSURE SWITCH (DIGITAL)
- AQUASTAT
- DUCT AVERAGING TEMPERATURE ELEMENT
- LIQUID FLOW METER
- VENTURI FLOW METER
- RECEIVER PRESSURE GAUGE (PANEL MTD.)
- CURRENT SENSING RELAY
- ELECTRIC DAMPER ACTUATOR
- CARBON DIOXIDE (CO2) SENSOR
- CARBON MONOXIDE (CO) SENSOR
- FIRESTAT
- REFRIGERANT DETECTOR/SENSOR
- MANUALLY ACTIVATED SWITCH (PULL STAT., PUSH STAT., ETC)
- ANALOG ELEMENT
- DIGITAL ELEMENT
- VARIABLE FREQUENCY DRIVE
- SILICON CONTROLLED RECTIFIER HEAT CONTROL

NORMAL OPEN	NORMAL CLOSED	
		GATE VALVE
		VALVE W/ REDUCERS (GATE VALVE SHOWN)
		GLOBE VALVE
		BUTTERFLY VALVE
		NEEDLE VALVE/INSTRUMENT VALVE
		3-WAY VALVE
		BALL VALVE
		PLUG VALVE
		ANGLE VALVE

CONTROL VALVE SYMBOLS:

- ELECTRIC ACTUATOR
- PNEUMATIC ACTUATOR
- SOLENOID ACTUATOR

αα-## — BI/BO — FEEDBACK CONTROL POINT TYPE IDENTIFIER

ABBREVIATIONS

AHU	AIR HANDLING UNIT
AI	ANALOG INPUT
AE	ANALOG ELEMENT
AO	ANALOG OUTPUT
BI	BINARY INPUT
BO	BINARY OUTPUT
CO2	CARBON DIOXIDE
CHR	CHILLED WATER RETURN
CHS	CHILLED WATER SUPPLY
DDC	DIRECT DIGITAL CONTROL
DA	DAMPER
DE	DIGITAL ELEMENT
EMS	ENERGY MANAGEMENT SYSTEM
ERU	ENERGY RECOVERY UNIT
FACP	FIRE ALARM CONTROL PANEL
FFCP	FIREFIGHTER CONTROL PANEL
GPM	GALLONS PER MINUTE
HX	HEAT EXCHANGER
HWR	HOT WATER RETURN
HWS	HOT WATER SUPPLY
ICI	INDUSTRIAL COMMUNICATION
MCI	MICRO CONTROLLER INTERFACE
MS	MOTOR STARTER
MVD	MANUAL VOLUME DAMPER
NC	NORMALLY CLOSED
NO	NORMALLY OPEN
PCU	PROCESS CONTROL UNIT
R	RELAY
RF	RETURN AIR FAN
RH	RELATIVE HUMIDITY
SF	SUPPLY AIR FAN
SEF	SMOKE EXHAUST FAN
UC	UNIT CONTROLLER

CONTROL DEFINITIONS:

NORMAL POSITION: INDICATES DEVICE POSITION WHEN THE SYSTEM IS DISABLED OR NOT ENERGIZED

FAIL POSITION: INDICATES DEVICE POSITION WHEN THE CONTROL SIGNAL IS LOST OR UPON A LOSS OF POWER.

CONTROLS GENERAL NOTES:

1. GENERAL NOTES MUST BE APPLIED FOR ALL HVAC CONTROLS SHEETS.
2. AFFIX PERMANENT TAGS/LABELS TO ALL DEVICES AS SPECIFIED.
3. CONTRACTOR MUST LABEL ALL DDC I/O SIGNAL LINES: 4-20 mA, VDC, OR SNVT.
4. SHOW A UNIQUE IDENTIFIER FOR EACH DEVICE. WHERE MULTIPLE IDENTICAL DEVICES ARE SHOWN (FOR EXAMPLE: DDC CONTROLLER, OA SENSOR, OR EP TRANSDUCER) EACH MUST BE SEQUENTIALLY NUMBERED. WHERE SEPERATE DDC CONTROLLER BUBBLES ARE USED THE SAME IDENTIFIER AND NUMBER, DEVICE AND SIGNAL IDENTIFIERS MUST BE CONSISTENT BETWEEN DRAWINGS.
5. UNIQUELY NUMBER ALL ANSI 709.1 DEVICES. THIS NUMBERING MUST BE CONSISTENT BETWEEN ALL DRAWINGS.

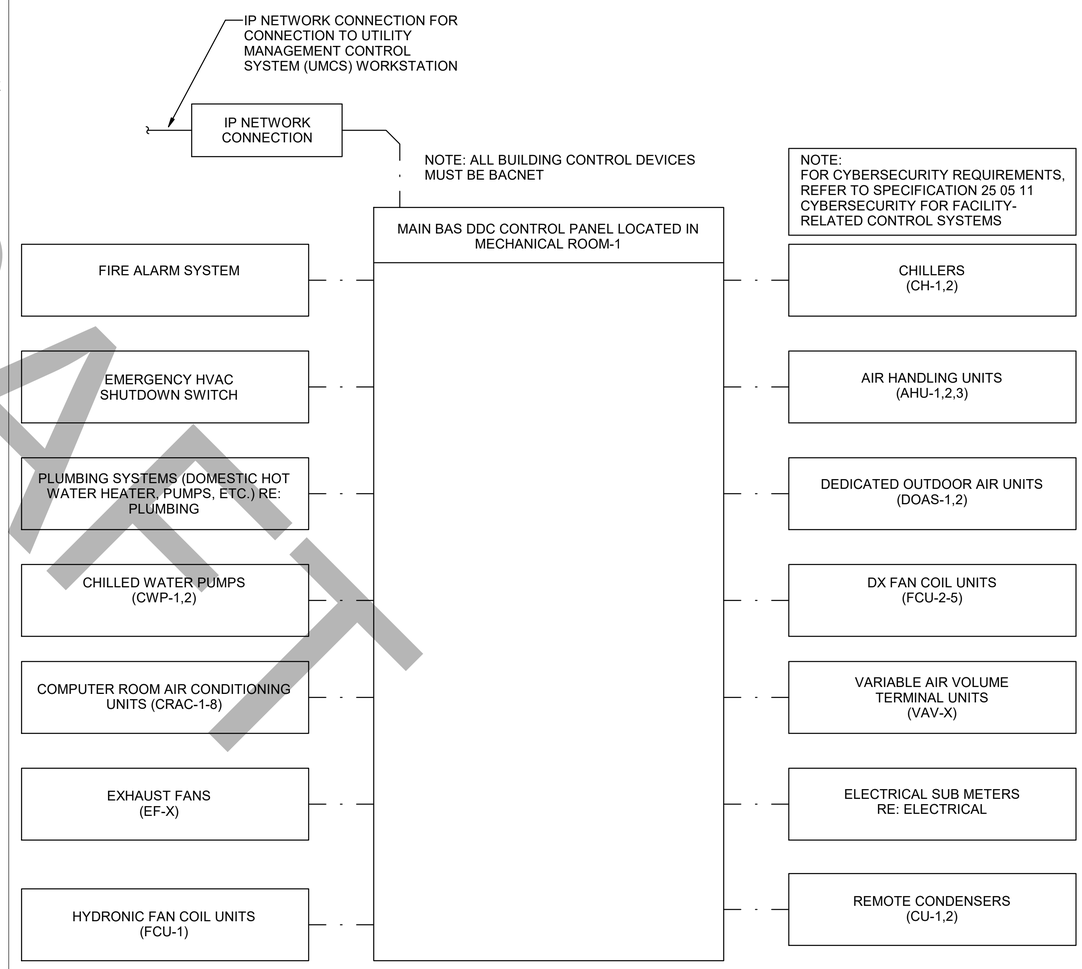

A6 FUNCTIONAL BLOCK DIAGRAM
NTS

DRAFT

US Army Corps of Engineers
Japan District ®

FOR REVIEW ONLY

THESE DOCUMENTS ARE FOR CONCEPT DESIGN AND NOT INTENDED FOR CONSTRUCTION, BIDDING OR PERMIT PURPOSES. THEY WERE PREPARED BY, OR UNDER SUPERVISION OF:

BRIAN C. ALLERHEILIGEN — NAME
93876 — REGISTRATION #
09/04/2025 — DATE
TEXAS REGISTERED ENGINEERING FIRM F-2966

MARK	DESCRIPTION	DATE

DESIGNED BY: K. WILKINS
DRAWN BY: G. HAYES
CHECKED BY: B. SCHNEIDER
SUBMITTED BY: A. GUERRA
SIZE: ISO A1
FILE NAME: M-801
ISSUE DATE: 09/04/2025
SOLICITATION NO.:
CONTRACT NO.:
DRAWING CODE:

US ARMY CORPS OF ENGINEERS
JAPAN ENGINEER DISTRICT
OKINAWA, JAPAN

Jacobs
JACOBS GOVERNMENT SERVICES COMPANY
777 MAIN STREET / FORT WORTH, TX 76102 USA

FY25 REPAIR HVAC WIDEBAND SATCOM OPS B100
CAMP BUCKNER COMMUNICATIONS ANNEX
OKINAWA, JAPAN
PROJECT NUMBER:D3449305

HVAC CONTROLS

SHEET ID
M-801

M M-801-

FILE PATH: C:\Users\MOHAPPC\Documents\D3449305-M-3D_MOHAPPC.rvt
PLOT DATE: 8/29/2025 3:10:57 PM PLOTTED BY: PLOT SCALE: NTS

BACKCHECK SUBMITTAL DESIGN

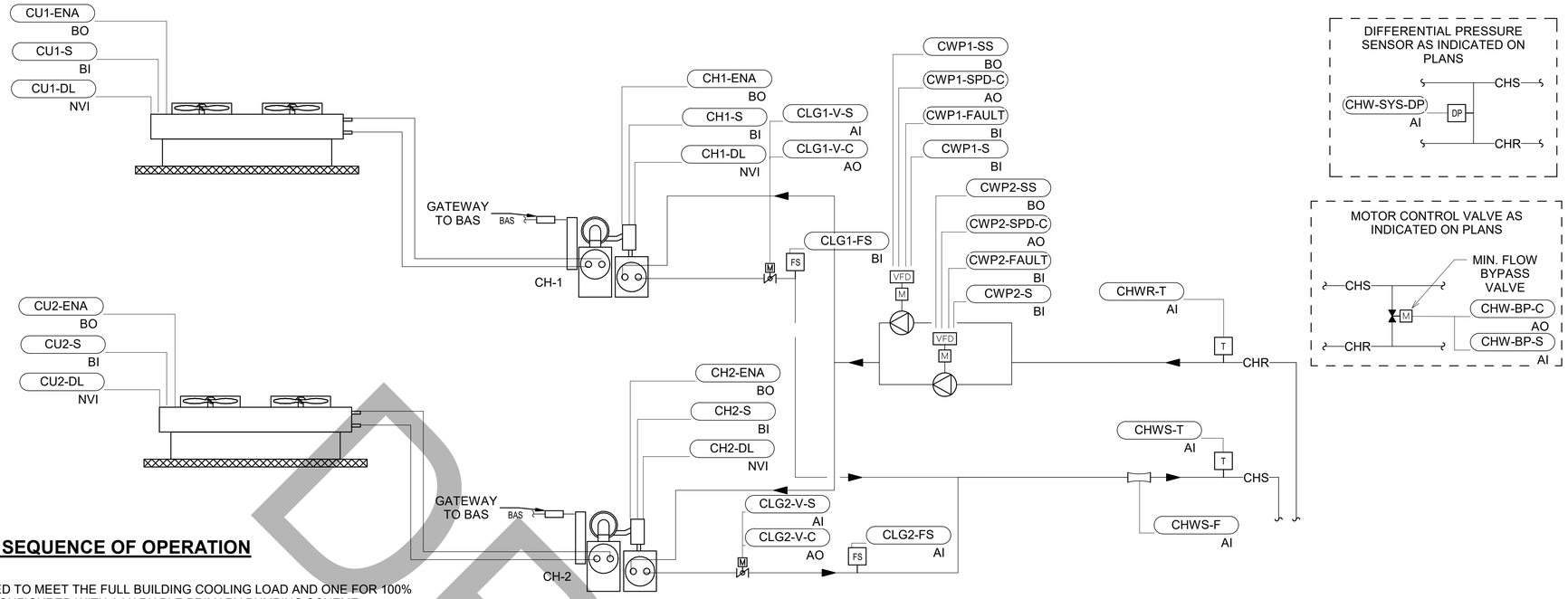

CHILLED WATER SYSTEM - VARIABLE PRIMARY SEQUENCE OF OPERATION

CHILLED WATER SYSTEM:
THE CHILLED WATER SYSTEM CONSISTS OF TWO CHILLERS, EACH SIZED TO MEET THE FULL BUILDING COOLING LOAD AND ONE FOR 100% REDUNDANCY. THE CHILLED WATER SYSTEM'S PUMPING SCHEME IS CONFIGURED WITH A VARIABLE PRIMARY PUMPING SCHEME.

CHILLED WATER SYSTEM RUN CONDITIONS:
THE CHILLED WATER SYSTEM MUST BE ENABLED TO RUN WHEN ANY OF THE COOLING COIL CONTROL VALVES IS GREATER THAN 20% (ADJUSTABLE) OPEN FOR GREATER THAN 2 MINUTES (ADJUSTABLE) OR BY INITIATION OF CHILLER START SEQUENCE AT EITHER THE NETWORK CONTROLLER OR THE LOCAL CHILLER CONTROL PANEL. THE BUILDING CHILLED WATER SYSTEM MUST BE DISABLED BY SYSTEM SCHEDULING, OR BY NO AIR HANDLER RUNNING, OR MANUALLY COMMANDED OFF BY THE OPERATOR. TO PREVENT SHORT CYCLING, THE BUILDING CHILLED WATER SYSTEM MUST RUN FOR AND BE OFF FOR A MINIMUM OF 30 MINUTES (ADJUSTABLE) UNLESS SHUT DOWN ON SAFETIES.

CHILLER OPERATION:
WHEN THE CHILLED WATER SYSTEM IS ENABLED TO OPERATE, THE PUMPS WILL START AND FLOW WILL BE VERIFIED. THEN CHILLERS MUST BE COMMANDED TO START AND MUST ACTIVATE USING THEIR OWN INTERNAL STARTUP CONTROL SEQUENCE. WHEN THE CHILLED WATER SYSTEM IS DISABLED, THE CHILLERS MUST BE COMMANDED TO STOP AND MUST DEACTIVATE USING THEIR OWN INTERNAL SHUTDOWN CONTROL SEQUENCE.

ROTATE THE LEAD/STANDBY DESIGNATION AUTOMATICALLY BASED ON THE FOLLOWING:
1. MANUALLY THROUGH A SOFTWARE SWITCH.
2. CHILLER RUNTIME.
3. SCHEDULING, SUCH AS ROTATING THE SEQUENCE ONCE PER DAY, WEEK, MONTH, SEASON, ETC

WHEN THE CHILLED WATER SYSTEM IS ENABLED TO OPERATE, THE LEAD CHILLER MUST BE COMMANDED TO START AND MUST ACTIVATE USING ITS OWN INTERNAL STARTUP CONTROL SEQUENCE. AS PART OF THE STARTUP SEQUENCE, FLOW THROUGH THE UNIT MUST BE CONFIRMED ABOVE THE UNIT'S MINIMUM FLOW ACCORDING TO THE UNIT'S FLOW SWITCH (CLG#-FS). (MINIMUM FLOW RATE IS PROVIDED BY THE UNIT MANUFACTURER).

THE CHILLER MUST RUN SUBJECT TO ITS OWN INTERNAL SAFETIES AND CONTROLS. THE CHILLER MUST LOAD AND UNLOAD AND STAGE COMPRESSORS AS REQUIRED TO MAINTAIN A LEAVING WATER TEMPERATURE OF 5.5°C (ADJUSTABLE).

PRIOR TO STARTUP, FLOW THROUGH CHILLER MUST BE VERIFIED (DETECTED AT THE FLOW SWITCH AT THE CHILLER, CLG#-FS) TO BE ABOVE THE MINIMUM CHILLER FLOW REQUIREMENT.

IN THE CASE OF A SINGLE CHILLER FAILURE, BAS TO COMMAND REDUNDANT CHILLER ON. IN CASE OF FAILURE OF SECOND CHILLER, BAS TO COMMAND THE AHU VALVES TO CLOSE.
CHILLER SAFETIES:
THE FOLLOWING SAFETIES MUST BE MONITORED THROUGH THE BAS:
1. CHILLER ALARM.
2. LOW CHILLER EVAPORATOR FLOW.

ALARMS MUST BE PROVIDED TO THE BAS OPERATOR INTERFACE AS FOLLOWS:
1. CHILLER FAILURE: COMMANDED ON, BUT THE STATUS IS OFF.
2. CHILLER RUNNING IN HAND: COMMANDED OFF, BUT THE STATUS IS ON.
3. CHILLER ALARM.
4. NO FLOW SIGNAL (CLG#-FS).
5. LOW EVAPORATOR TEMPERATURE
6. HIGH EVAPORATOR TEMPERATURE
7. HIGH CONDENSER PRESSURE

CHILLED WATER SYSTEM - PRIMARY PUMP CONTROL:
THE CHILLED WATER PUMPS MUST BE CONTROLLED VIA A VARIABLE-VOLUME PRIMARY PUMPING SCHEME. THE PUMPS MUST RUN IN A LEAD/STANDBY CONFIGURATION.

WHEN THE CHILLED WATER SYSTEM IS ENABLED TO OPERATE, THE DESIGNATED CHILLED WATER PUMP MUST IMMEDIATELY BE STARTED. WHEN THE CHILLED WATER SYSTEM IS DISABLED, THE PUMP MUST BE STOPPED AFTER A SUITABLE TIME DELAY (INITIAL SETTING: 5 MINUTES, ADJUSTABLE, OR BASED ON A SIGNAL FROM THE CHILLER CONTROL PANEL).

WHEN A PUMP IS COMMANDED TO START IT MUST BE ENERGIZED AT MINIMUM VFD SPEED THEN RAMP AS REQUIRED BY THE DIFFERENTIAL PRESSURE CONTROL SYSTEM. WHEN A PUMP IS COMMANDED TO STOP IT MUST FIRST CONTINUE TO RUN FOR A SUITABLE TIME DELAY PERIOD (INITIAL SETTING: 5 MINUTES, ADJUSTABLE), THEN MUST RAMP TO MINIMUM VFD SPEED THEN BE DEENERGIZED.

CHILLED WATER SYSTEM - VARIABLE PRIMARY SEQUENCE OF OPERATION CONTINUED

THE BAS MUST HAVE THE CAPABILITY TO DESIGNATE ANY PUMP AS LEAD OR STANDBY AS DESIRED AND TO ROTATE THE SEQUENCE AUTOMATICALLY BASED ON THE FOLLOWINGS:
1. MANUALLY THROUGH A SOFTWARE SWITCH.
2. PUMP RUNTIME.
3. SCHEDULING, SUCH AS ROTATING THE SEQUENCE ONCE PER DAY, WEEK, MONTH, SEASON, ETC.

THE CONTROLLER MUST MONITOR THE BUILDING DIFFERENTIAL PRESSURES AT REMOTE SENSORS (CHW-SYS-DP) AND VARY THE PUMP'S VFD SPEED TO MAINTAIN THE DIFFERENTIAL PRESSURE SETPOINT OF EACH SENSOR TO A MINIMUM OF 34.5 KPA (ADJUSTABLE, FOR EACH SENSOR) (THE FINAL SET POINT TO BE DETERMINED DURING TEST AND BALANCE). ON A DROP IN DIFFERENTIAL PRESSURE, THE PUMP SPEED MUST BE APPROPRIATELY INCREASED. ON A RISE IN SYSTEM DIFFERENTIAL PRESSURE, THE PUMP SPEED MUST BE APPROPRIATELY DECREASED. THE PUMP VFD MUST BE DECREASED TO THE MINIMUM AS INDICATED BY THE PUMP AND VFD MANUFACTURER.

IF THE PUMP FAILS FOR ANY REASON IT MUST BE STOPPED. PUMP FAILURE MUST BE DETERMINED BY AT LEAST ANY ONE OF THE FOLLOWING:
1. PUMP COMMANDED ON BUT STATUS IS OFF
2. LOSS OF SYSTEM FLOW (DETECTED AT FLOW SENSOR, CLG#-FS).

ALARMS MUST BE PROVIDED AS FOLLOWS:
1. CHILLED WATER PUMP FAILURE: COMMANDED ON, BUT THE STATUS IS OFF.
2. CHILLED WATER PUMP RUNNING IN HAND: COMMANDED OFF, BUT THE STATUS IS ON.
3. CHILLED WATER PUMP RUNTIME EXCEEDED: STATUS RUNTIME EXCEEDS A USER DEFINABLE LIMIT.

CHILLER WATER SYSTEM DIFFERENTIAL PRESSURE RESET:
THE DIFFERENTIAL PRESSURE SETPOINTS MUST BE RESET INCREMENTALLY DOWN TO MAINTAIN A MAXIMUM OF 2 (ADJUSTABLE) CONTROL VALVES AT A MAXIMUM OF 90% (ADJUSTABLE) OPEN. AS MORE CONTROL VALVES OPEN THE DIFFERENTIAL PRESSURE SETPOINTS MUST RESET UP INCREMENTALLY TO THE SETPOINT PRESSURES ESTABLISHED DURING BALANCING.

MINIMUM FLOW BYPASS:
THE MINIMUM FLOW BYPASS CONTROL VALVE (CHW-BP-C) SHALL MODULATE OPEN UPON A DROP IN THE FLOW THROUGH THE FLOW SENSOR (CLG#-FS) REACHES 1 LPS ABOVE THE CHILLER'S MINIMUM FLOW TO MAINTAIN THE CHILLER MINIMIM FLOW. THE MINIMUM FLOW BYPASS CONTROL VALVE (CHW-BP-C) SHALL REMAIN CLOSED WHEN THE FLOW IS ABOVE THE CHILLER MINIMUM FLOW.

ALARMS MUST BE PROVIDED AS FOLLOWS
1. FLOW THROUGH CHILLER IS 25% (ADJ) LESS THAN SETPOINT

BUILDING CHILLED WATER TEMPERATURE CONTROL:
THE BUILDING CHILLED WATER TEMPERATURE SETPOINT MUST BE MAINTAINED BY THE CHILLER'S OWN INTERNAL CONTROLS.

THE FOLLOWING TEMPERATURES MUST BE MONITORED:
1. CHILLED WATER SUPPLY (CHWS-T).
2. CHILLED WATER RETURN (CHWR-T).

ALARMS MUST BE PROVIDED AS FOLLOWS:
1. BUILDING HIGH CHILLED WATER SUPPLY TEMP: IF GREATER THAN 6.6°C (ADJUSTABLE).
2. BUILDING LOW CHILLED WATER SUPPLY TEMP: IF LESS THAN 4.4°C (ADJUSTABLE).

SHUTDOWN:
WHEN THE SYSTEM IS COMMANDED TO SHUT DOWN, THE EQUIPMENT MUST BE ALIGNED AS FOLLOWS:
CHILLER - DISABLED, CHILLED WATER PUMPS - OFF, MINIMUM FLOW BYPASS - OPEN.

A1 CHILLED WATER SYSTEM - VARIABLE PRIMARY CONTROL DIAGRAM & SEQUENCE
NTS

DRAFT

US Army Corps of Engineers
Japan District ®

FOR REVIEW ONLY
THESE DOCUMENTS ARE FOR CONCEPT DESIGN AND NOT INTENDED FOR CONSTRUCTION, BIDDING OR PERMIT PURPOSES. THEY WERE PREPARED BY, OR UNDER SUPERVISION OF:
BRIAN C. ALLERHEILIGEN
NAME
93876 09/04/2025
REGISTRATION # DATE
TEXAS REGISTERED ENGINEERING FIRM F-2966

MARK	DESCRIPTION	DATE

ISSUE DATE: 09/04/2025
SOLICITATION NO.: -
CONTRACT NO.: -
DRAWING CODE: -

DESIGNED BY: K. WILKINS
DRAWN BY: C. WATKINS
CHECKED BY: B. SCHNEIDER
SUBMITTED BY: A. GUERRA
SIZE: ISO A1
FILE NAME: M-802

US ARMY CORPS OF ENGINEERS
JAPAN ENGINEER DISTRICT
OKINAWA, JAPAN

Jacobs
JACOBS GOVERNMENT SERVICES COMPANY
777 MAIN STREET, FORT WORTH, TX 76102
USA

FY25 REPAIR HVAC WIDEBAND SATCOM OPS B100
CAMP BUCKNER COMMUNICATIONS ANNEX
OKINAWA, JAPAN
PROJECT NUMBER:D3449305
HVAC CONTROLS

SHEET ID
M-802

M M-802-

FILE PATH: C:\Users\MOHAPPC\Documents\D3449305-M-3D_MOHAPPC.rvt
PLOT DATE: 8/29/2025 3:10:58 PM PLOTTED BY: PLOT SCALE: NTS

BACKCHECK SUBMITTAL DESIGN

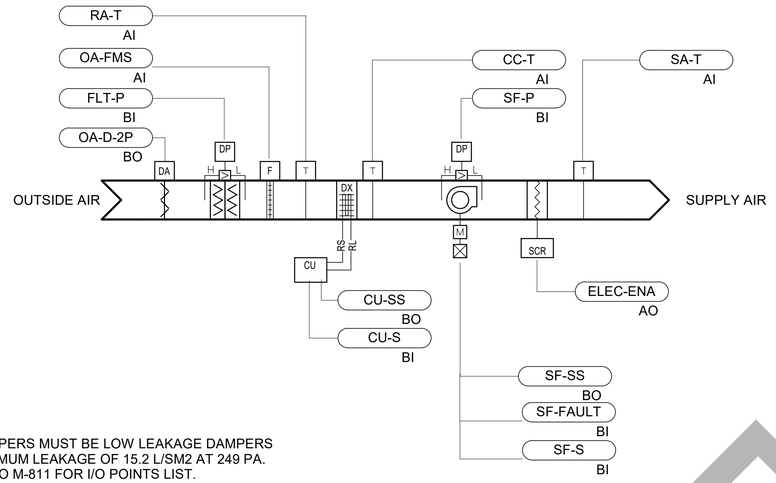

NOTES:
1. ALL DAMPERS MUST BE LOW LEAKAGE DAMPERS WITH MAXIMUM LEAKAGE OF 15.2 L/SM2 AT 249 PA.
2. REFER TO M-811 FOR I/O POINTS LIST.

DEDICATED OUTDOOR AIR SYSTEM - DX SEQUENCE OF OPERATION

DEDICATED OUTSIDE AIR SYSTEM (DOAS-2):
THE DEDICATED OUTSIDE AIR UNIT SHALL BE A CONSTANT VOLUME SYSTEM TO PROVIDE BUILDING VENTILATION FOR THE ADMINISTRATION AREAS. IT SHALL BE A CONSTANT VOLUME TYPE WITH A SUPPLY FAN PKG, DX COIL, ELECTRIC REHEAT. IT SHALL DEHUMIDIFY THE OUTDOOR AIR DOWN TO 12.8° C DRY BULB THEN REHEAT IT UP TO 15.6°C DRY BULB. VENTILATION AIR SHALL BE DELIVERED TO AHU-2.

RUN CONDITIONS:
THE DOAS SHALL RUN AS DEFINED BY THE BUILDING AUTOMATION SYSTEM (BAS) OPERATOR FOR OCCUPIED OR UNOCCUPIED HOURS CONSISTENT WITH THE BUILDING'S OPERATING SCHEDULE. THE SUPPLY FAN SHALL RUN ANYTIME THE UNIT IS COMMANDED TO RUN, UNLESS SHUTDOWN ON SAFETIES. TO PREVENT SHORT CYCLING, THE FANS SHALL HAVE A USER DEFINABLE MINIMUM RUNTIME OF 30 MINUTES (ADJUSTABLE). THE BAS SHALL ALLOW DOAS TO BE PROGRAMMED FOR START AND STOP BASED ON A USER DEFINABLE SCHEDULE UNIQUE TO EACH DAY OF THE WEEK (SUNDAY THROUGH SATURDAY). UPON RECEIVING A START COMMAND, THE MOTORIZED CONTROL DAMPERS AT THE INTAKE AIR OPENING SHALL OPEN AND THE STATUS SHALL BE CONFIRMED. IF DAMPER STATUS IS NOT CONFIRMED OPEN AFTER 1 MINUTE (ADJUSTABLE) AN ALARM SHALL BE GENERATED AT THE BAS.

DX COIL:
THE DX COIL SHALL OPERATE UNDER MANUFACTURERED SUPPLIED SAFTIES AND CONTROLS TO MAINTAIN THE FOLLOWING CONDITIONS. IN COOLING/DEHUMIDIFICAITON MODE DX COOLING COIL SHALL DEHUMIDFY SUPPLY AIR DOWN TO 12.8°C DB (ADJUSTABLE) THEN USING ELECTRIC REHEAT, REHEAT THE SUPPLY AIR UP TO 15.6°C (ADJUSTABLE). IF ENTERING AIR TEMPERATURE DROPS BELOW 11.8°C (ADJUSTABLE) FOR MORE THAN 15 MINUTES (ADJUSTABLE) THE DX COOLING SECTION SHALL DENERGIZE.

ELECTRIC HEATING OPERATION:
WHEN OUTSIDE AIR TEMPERATURE IS BELOW 11.7°C (ADJUSTABLE) FOR MORE THAN 15 MINUTES (ADJUSTABLE) ELECTRIC HEATING SECTION SHALL MODULATE UNDER MANUFACTURER SUPPLIED CONTROL TO MAINTAIN SUPPLY AIR TEMPERATURE OF 15.6ºC +/- 1.1°C (ADJUSTABLE; T-03). AN ALARM SHALL BE PROVIDED FOR SUPPLY AIR TEMPERATURE 2.8°C (ADJUSTABLE) GREATER THAN THE COIL DISCHARGE SETPOINT.

OUTSIDE AIR MONITORING
THE BAS SHALL MONITOR THE OUTSIDE AIRFLOW THROUGH THE OUTSIDE AIRFLOW STATION.

FILTER DIFFERENTIAL PRESSURE MONITOR:
THE BAS SHALL MONITOR THE DIFFERENTIAL PRESSURE ACROSS THE FILTER BANK. ALARMS SHALL BE PROVIDED FOR THE FOLLOWING: FILTER CHANGE REQUIRED: FILTER DIFFERENTIAL PRESSURE EXCEEDS A USER DEFINABLE LIMIT (ADJUSTABLE).

UNIT SHUTDOWN:
THE UNIT SHALL SHUT DOWN AND GENERATE AN ALARM AT THE BAS IF ONE OF THE FOLLOWING CONDITIONS OCCURS:
1. SUPPLY FAN: SUPPLY FAN FAILURE ALARM PER THE FOLLOWING:
   a. SUPPLY FAN FAILURE: COMMANDED ON, BUT STATUS IS OFF.
   b. SUPPLY FAN IN HAND: COMMANDED OFF, BUT STATUS IS ON.
3. AN EMERGENCY SHUTDOWN SIGNAL FROM A CENTRAL SWITCH (PER UFC 4-010-01) WHEN A CHEMICAL OR BIOLOGICAL THREAT IS IMMINENT.
4. COMMANDED OFF BY BAS.

UNIT SHUTDOWN SHALL ALIGN THE UNIT COMPONENTS TO THE FOLLOWING: SUPPLY AND CORRESPONDING ADMIN BUILDING EXHAUST FANS OFF AND OUTSIDE AIR DAMPER CLOSED. UPON SHUTDOWN ON ONE OF THE ABOVE FAULT CONDITIONS, THE BAS SHALL GENERATE AN ALARM AT THE USER INTERFACE.

B1 DOAS-2 - DX CONTROL DIAGRAM & SEQUENCE
NTS

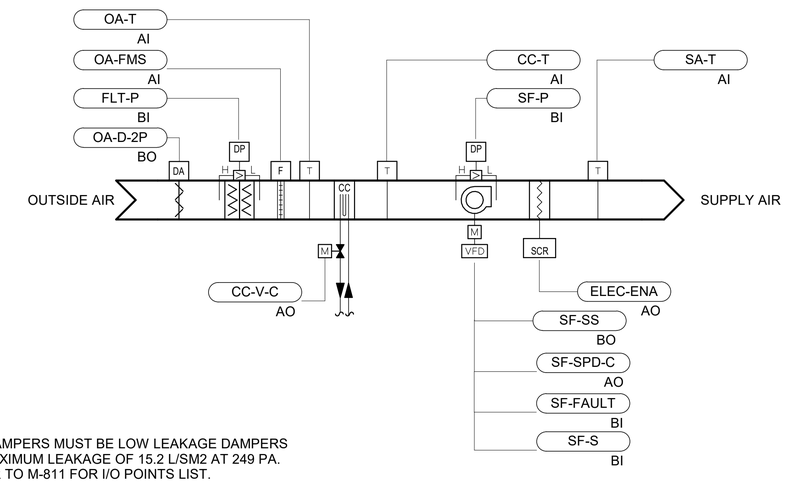

NOTES:
1. ALL DAMPERS MUST BE LOW LEAKAGE DAMPERS WITH MAXIMUM LEAKAGE OF 15.2 L/SM2 AT 249 PA.
2. REFER TO M-811 FOR I/O POINTS LIST.

DEDICATED OUTDOOR AIR SYSTEM - CHILLED WATER SEQUENCE OF OPERATION

DEDICATED OUTSIDE AIR SYSTEM (DOAS-1):
THE DEDICATED OUTSIDE AIR UNIT SHALL BE A CONSTANT VOLUME SYSTEM TO PROVIDE BUILDING VENTILATION FOR THE OPERATIONS AREAS. IT SHALL BE A CONSTANT VOLUME TYPE WITH A SUPPLY FAN PKG, CHILLED WATER COIL, AND ELECTRIC REHEAT. IT SHALL DEHUMIDIFY THE OUTDOOR AIR DOWN TO 12.8°C WET BULB THEN REHEAT IT UP TO 15.6°C DRY BULB. VENTILATION AIR SHALL BE DELIVERED TO EACH AIR HANDLER IN THE OPERATIONS AREA..

RUN CONDITIONS:
THE DOAS SHALL RUN AS DEFINED BY THE BUILDING AUTOMATION SYSTEM (BAS) OPERATOR FOR OCCUPIED OR UNOCCUPIED HOURS CONSISTENT WITH THE BUILDING'S OPERATING SCHEDULE. THE SUPPLY FAN SHALL RUN ANYTIME THE UNIT IS COMMANDED TO RUN, UNLESS SHUTDOWN ON SAFETIES. TO PREVENT SHORT CYCLING, THE FANS SHALL HAVE A USER DEFINABLE MINIMUM RUNTIME OF 30 MINUTES (ADJUSTABLE). THE BAS SHALL ALLOW DOAS TO BE PROGRAMMED FOR START AND STOP BASED ON A USER DEFINABLE SCHEDULE UNIQUE TO EACH DAY OF THE WEEK (SUNDAY THROUGH SATURDAY). UPON RECEIVING A START COMMAND, THE MOTORIZED CONTROL DAMPERS AT THE INTAKE AIR OPENING SHALL OPEN AND THE STATUS SHALL BE CONFIRMED. IF DAMPER STATUS IS NOT CONFIRMED OPEN AFTER 1 MINUTE (ADJUSTABLE) AN ALARM SHALL BE GENERATED AT THE BAS.

CHILLED WATER COIL:
THE CHILLED WATER COIL MUST OPERATE UNDER MANUFACTURER SUPPLIED SAFETIES AND CONTROLS TO MAINTAIN THE FOLLOWING CONDITIONS. THE CHILLED WATER COOLING COIL MUST DEHUMIDFY SUPPLY AIR DOWN TO 12.8°C DRY BULB (ADJUSTABLE) BY MODULATING THE CHILLED WATER CONTROL VALVE. USING ELECTRIC REHEAT, THE REHEAT COIL SHALL MODULATE TOREHEAT THE AIR TO 15.6°C DRY BULB (ADJUSTABLE). IF ENTERING AIR TEMPERATURE DROPS BELOW 11.7°C (ADJUSTABLE) FOR MORE THAN 15 MINUTES (ADJUSTABLE) THE CHILLED WATER CONTROL VALVE COOLING CHALL CLOSE. AN ALARM MUST BE PROVIDED FOR HIGH SUPPLY AIR IF THE SUPPLY AIR TEMPERATURE IS 2.8ºC (ADJUSTABLE) GREATER THAN THE COIL DISCHARGE SETPOINT.

ELECTRIC OPERATION:
WHEN OUTSIDE AIR TEMPERATURE IS BELOW 13.3°C (ADJUSTABLE) FOR MORE THAN 15 MINUTES (ADJUSTABLE) ELECTRIC HEATING SECTION SHALL MODULATE UNDER MANUFACTURER SUPPLIED CONTROL TO MAINTAIN SUPPLY AIR TEMPERATURE OF 15.6ºC +/- 1.1°C (ADJUSTABLE; T-03). AN ALARM SHALL BE PROVIDED FOR SUPPLY AIR TEMPERATURE 2.8°C (ADJUSTABLE) GREATER THAN THE COIL DISCHARGE SETPOINT.

OUTSIDE AIR MONITORING
THE BAS SHALL MONITOR THE OUTSIDE AIRFLOW THROUGH THE OUTSIDE AIRFLOW STATION.

FILTER DIFFERENTIAL PRESSURE MONITOR:
THE BAS SHALL MONITOR THE DIFFERENTIAL PRESSURE ACROSS THE FILTER BANK. ALARMS SHALL BE PROVIDED FOR THE FOLLOWING: FILTER CHANGE REQUIRED: FILTER DIFFERENTIAL PRESSURE EXCEEDS A USER DEFINABLE LIMIT (ADJUSTABLE).

UNIT SHUTDOWN:
THE UNIT SHALL SHUT DOWN AND GENERATE AN ALARM AT THE BAS IF ONE OF THE FOLLOWING CONDITIONS OCCURS:
1. SUPPLY AIR SMOKE DETECTION: SA DUCT DETECTORS SHALL BE HARD WIRED TO SHUT DOWN THE UNIT SUPPLY FAN UPON DETECTION OF SMOKE. THE SA SMOKE DETECTOR SHALL ALSO ADDRESS THE FIRE ALARM CONTROL PANEL, RE: FIRE PROTECTION.
2. SUPPLY FAN: SUPPLY FAN FAILURE ALARM PER THE FOLLOWING:
   a. SUPPLY FAN FAILURE: COMMANDED ON, BUT STATUS IS OFF.
   b. SUPPLY FAN IN HAND: COMMANDED OFF, BUT STATUS IS ON.
3. AN EMERGENCY SHUTDOWN SIGNAL FROM A CENTRAL SWITCH (PER UFC 4-010-01) WHEN A CHEMICAL OR BIOLOGICAL THREAT IS IMMINENT.
4. COMMANDED OFF BY BAS.

UNIT SHUTDOWN SHALL ALIGN THE UNIT COMPONENTS TO THE FOLLOWING: SUPPLY AND CORRESPONDING OPERATIONS BUILDING EXHAUST FANS OFF AND OUTSIDE AIR DAMPER CLOSED. UPON SHUTDOWN ON ONE OF THE ABOVE FAULT CONDITIONS, THE BAS SHALL GENERATE AN ALARM AT THE USER INTERFACE.

B6 DOAS-1 - CHW CONTROL DIAGRAM & SEQUENCE
NTS

DRAFT

US Army Corps of Engineers
Japan District ®

FOR REVIEW ONLY
THESE DOCUMENTS ARE FOR CONCEPT DESIGN AND NOT INTENDED FOR CONSTRUCTION BIDDING OR PERMIT PURPOSES. THEY WERE PREPARED BY, OR UNDER SUPERVISION OF:
BRIAN C. ALLERHEILIGEN
NAME
93876 09/04/2025
REGISTRATION # DATE
TEXAS REGISTERED ENGINEERING FIRM F-2966

MARK	DESCRIPTION	DATE

ISSUE DATE: 09/04/2025
SOLICITATION NO.:
CONTRACT NO.:
DRAWING CODE:

DESIGNED BY: K. WILKINS
DRAWN BY: D. MATHIS
CHECKED BY: B. SCHNEIDER
SUBMITTED BY: A. GUERRA
SIZE: ISO A1
FILE NAME: M-803

US ARMY CORPS OF ENGINEERS
JAPAN ENGINEER DISTRICT
OKINAWA, JAPAN

Jacobs
JACOBS GOVERNMENT SERVICES COMPANY
777 MAIN STREET, FORT WORTH, TX 76102
USA

FY25 REPAIR HVAC WIDEBAND SATCOM OPS B100
CAMP BUCKNER COMMUNICATIONS ANNEX
OKINAWA, JAPAN
PROJECT NUMBER:D3449305
HVAC CONTROLS

SHEET ID
M-803

M M-803-

FILE PATH: C:\Users\MOHAPPC\Documents\D3449305-M-3D_MOHAPPC.rvt
PLOT DATE: 8/29/2025 3:10:59 PM PLOTTED BY: PLOT SCALE: NTS

BACKCHECK SUBMITTAL DESIGN

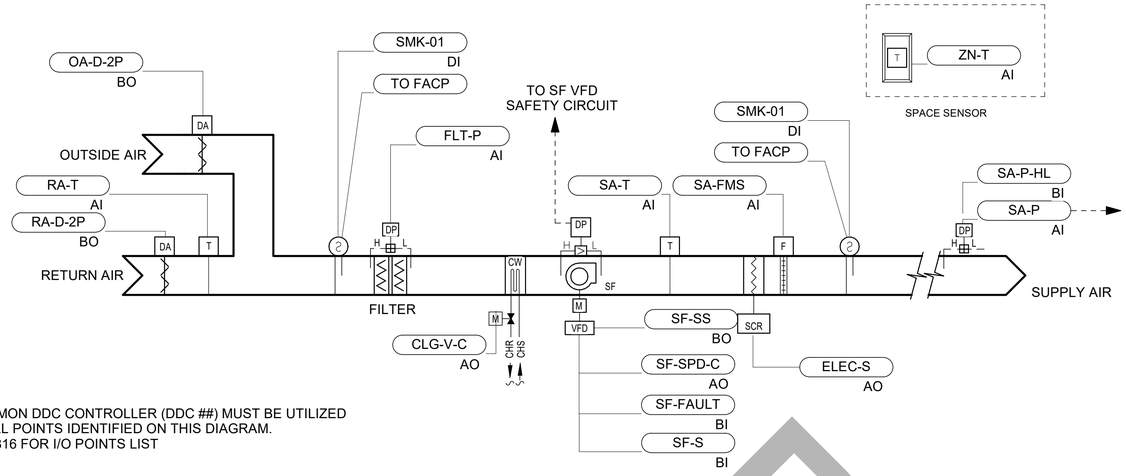

NOTES:
1. A COMMON DDC CONTROLLER (DDC ##) MUST BE UTILIZED FOR ALL POINTS IDENTIFIED ON THIS DIAGRAM.
2. RE: M-816 FOR I/O POINTS LIST

AIR HANDLING UNIT CONTROL SEQUENCE

RUN CONDITIONS - SCHEDULED:
EACH UNIT FAN MUST RUN AS DEFINED BY THE BAS OPERATOR FOR OCCUPIED OR UNOCCUPIED HOURS CONSISTENT WITH THE BUILDING'S OPERATING SCHEDULE. THE SUPPLY FAN MUST RUN ANYTIME THE UNIT IS COMMANDED TO RUN, UNLESS SHUTDOWN ON SAFETIES. TO PREVENT SHORT CYCLING, THE SUPPLY FAN MUST HAVE A USER DEFINABLE MINIMUM RUNTIME OF 30 MINUTES (ADJUSTABLE). THE BAS MUST ALLOW THE UNIT TO BE PROGRAMMED FOR START AND STOP BASED ON A USER DEFINABLE SCHEDULE UNIQUE TO EACH DAY OF THE WEEK (SUNDAY THROUGH SATURDAY).

THE BAS MUST ALSO MONITOR THE SYSTEM COMPONENTS AND AUTOMATICALLY START IF EITHER OF THE FOLLOWING OCCURS:
1. MORE THAN ONE (ADJUSTABLE) ZONES (VAV TERMINAL UNITS) ON THE AIR HANDLING UNIT SYSTEM CALL FOR COOLING;
2. MORE THAN ONE (ADJUSTABLE) ZONES (VAV TERMINAL UNITS) ON THE AIR HANDLING UNIT SYSTEM CALL FOR HEATING

UNIT START:
THE UNIT MUST EMPLOY AN OPTIMAL START STRATEGY AND MUST START PRIOR TO SCHEDULED OCCUPANCY BASED ON THE TIME NECESSARY FOR THE ZONES TO REACH THEIR OCCUPIED SETPOINTS. THE START TIME MUST AUTOMATICALLY ADJUST BASED ON CHANGES IN OUTSIDE AIR TEMPERATURE AND ZONE TEMPERATURES. UPON RECEIVING A START COMMAND, THE DAMPER AT THE INTAKE AND RETURN SHALL OPEN AND THE STATUS SHALL BE CONFIRMED. IF DAMPER STATUS IS NOT CONFIRMED OPEN AFTER ONE MINUTE (ADJUSTABLE) AN ALARM SHALL BE GENERATED AT THE BMS. WHEN THE BAS CALLS FOR THE UNIT TO START, THE FOLLOWING SEQUENCES MUST BE ACTIVATED:
1. SUPPLY FAN COMMANDED ON.
2. ZONE LEVEL TERMINAL UNIT HOT WATER CONTROL VALVES MODULATED AS REQUIRED TO MAINTAIN TEMPERATURE SETPOINTS.
3. CHILLED WATER CONTROL VALVE (CLG-V-C) MODULATED AS REQUIRED TO MAINTAIN TEMPERATURE SETPOINTS.

SUPPLY AIR TEMPERATURE SETPOINT CONTROL:
THE BAS MUST MONITOR THE UNIT DISCHARGE AIR TEMPERATURE (SA-T) AND MAINTAIN A FIXED SUPPLY AIR TEMPERATURE SETPOINT OF 12.8°C (ADJUSTABLE).

SUPPLY AIR DUCT STATIC PRESSURE CONTROL:
THE BAS MUST MEASURE SUPPLY DUCT STATIC PRESSURE AT A DUCT MOUNTED STATIC PRESSURE SENSOR (SA-P) AND MODULATE THE SUPPLY FAN VFD SPEED TO MINIMIZE THE DUCT STATIC PRESSURE SETPOINT NECESSARY TO MAINTAIN ONE VAV TERMINAL UNIT INLET CONTROL DAMPER AT THE FULL OPEN (MAXIMUM COOLING DEMAND) WITH A TIME-OUT FEATURE (CRITICAL ZONE RESET STRATEGY). THE BAS MUST ALSO HAVE THE CAPABILITY OF MANUAL STATIC PRESSURE SETPOINT ADJUSTMENT AS A USER OVERRIDE FUNCTION. STATIC PRESSURE CONTROL ALARMS MUST BE PROVIDED AS FOLLOWS:
1. HIGH SUPPLY AIR STATIC PRESSURE: IF THE SUPPLY AIR STATIC PRESSURE IS 25% (ADJUSTABLE) GREATER THAN THE SETPOINT.
2. LOW SUPPLY AIR STATIC PRESSURE: IF THE SUPPLY AIR STATIC PRESSURE IS 25% (ADJUSTABLE) LESS THAN THE SETPOINT.
3. SUPPLY FAN VFD SIGNAL FAULT.

SPACE TEMPERATURE CONTROL:
EACH UNIT MUST OPERATE AS DEFINED BY THE BUILDING AUTOMATION SYSTEM (BAS) OPERATOR FOR OCCUPIED OR UNOCCUPIED HOURS CONSISTENT WITH THE BUILDING'S OPERATING SCHEDULE.

1. OCCUPIED MODE (AS DETERMINED BY BAS SCHEDULE OR OCCUPANCY/VACANCY SENSORS):
   A. THE UNITS MUST MAINTAIN ZONE COOLING AND HEATING SETPOINTS AS DEFINED ON M-001.
2. UNOCCUPIED MODE (NIGHT SETBACK): THE UNIT MUST MAINTAIN:
   A. 2.8°C (ADJUSTABLE) ABOVE THE ZONE'S COOLING SETPOINT.
   B. 2.8°C (ADJUSTABLE) BELOW THE ZONE'S HEATING SETPOINT.

COOLING:
THE COOLING CONTROL MODE MUST BE ENABLED WHENEVER:
1. THE SUPPLY FAN STATUS IS ON;
2. AND ONE OR MORE ZONES CALLS FOR COOLING AIRFLOW.
THE BAS MUST MONITOR THE SUPPLY AIR TEMPERATURE (SA-T) AND MODULATE THE COOLING COIL VALVE (CLG-V-C) OPEN TO MAINTAIN THE DEFINED COOLING SETPOINT. AN ALARM MUST BE PROVIDED FOR HIGH SUPPLY AIR TEMPERATURE IF THE SUPPLY AIR TEMPERATURE IS 2.8°C (ADJUSTABLE) GREATER THAN THE DISCHARGE SETPOINT.

HEATING:
THE HEATING CONTROL MODE MUST BE ENABLED WHENEVER:
1. THE SUPPLY FAN STATUS IS ON;
2. AS ZONES CALL FOR HEATING AIRFLOW.
THE ELECTRIC HEATING COIL SHALL MODULATE TO INCREASE THE SUPPLY AIR TEMPERATURE TO 29.4°C (ADJUSTABLE).

FILTER DIFFERENTIAL PRESSURE MONITOR:
THE BAS MUST MONITOR THE DIFFERENTIAL PRESSURE ACROSS THE FILTER BANK. ALARM MUST BE PROVIDED WHEN FILTER DIFFERENTIAL PRESSURE EXCEEDS SETPOINT DETERMINED BY THE FILTER MANUFACTURER (ADJUSTABLE).

UNIT SHUTDOWN:
THE UNIT MUST SHUT DOWN IF ONE OF THE FOLLOWING CONDITIONS OCCURS:
1. SUPPLY FAN: SUPPLY FAN FAILURE ALARM PER THE FOLLOWING:
   a. SUPPLY FAN FAILURE: COMMANDED ON, BUT STATUS IS OFF.
   b. SUPPLY FAN IN HAND: COMMANDED OFF, BUT STATUS IS ON.
   c. VFD FAULT.
2. AN EMERGENCY SHUTDOWN SIGNAL FROM A CENTRAL SWITCH (PER UFC 4-010-01) WHEN A CHEMICAL OR BIOLOGICAL THREAT IS IMMINENT.
3. COMMANDED OFF BY BAS.
4. SUPPLY AND RETURN AIR SMOKE DETECTION: SA AND RA DUCT DETECTORS WILL BE HARD WIRED TO SHUT DOWN THE SUPPLY FAN, AHU AND ASSOCIATED DOAS-1 AND DOAS-1 SUPPLY FAN UPON DETECTION OF SMOKE IN THE SUPPLY AIR DISCHARGE OR THE RETURN AIR INTAKE. THE SMOKE DETECTORS WILL ALSO ADDRESS THE FIRE ALARM CONTROL PANEL.

UNIT SHUTDOWN MUST ALIGN THE UNIT COMPONENTS TO THE FOLLOWING (REFER TO CONTROL DIAGRAM FOR ABBREVIATIONS): SUPPLY FAN (SF) OFF, AND CHILLED WATER VALVE (CLG-V-C) IS CLOSED. UPON SHUTDOWN ON ONE OF THE ABOVE FAULT CONDITIONS, THE BAS MUST GENERATE AN ALARM AT THE USER INTERFACE.

A1 AIR HANDLING UNIT (AHU-1) CONTROL DIAGRAM & SEQUENCE
NTS

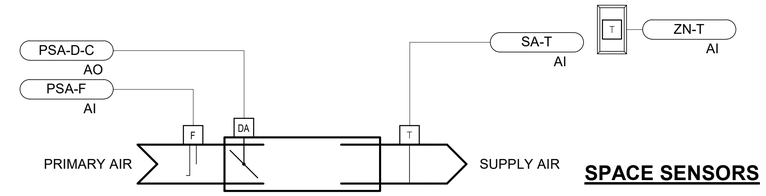

SPACE SENSORS

VAV

NOTE:
REFER TO M-812 FOR I/O POINTS LIST.

VAV TERMINAL UNIT CONTROL SEQUENCE

RUN CONDITIONS - SCHEDULED:
EACH UNIT SHALL RUN ACCORDING TO USER DEFINABLE TIME SCHEDULED (ADJUSTABLE) IN THE FOLLOWING MODES:

OCCUPIED MODE: THE UNITS SHALL MAINTAIN ZONE COOLING AND HEATING SETPOINTS AS DEFINED ON M-001.

UNOCCUPIED MODE (NIGHT SETBACK): THE UNIT SHALL MAINTAIN:
1. 29.4°C ADJUSTABLE COOLING SETPOINT.
2. 12.8°C ADJUSTABLE HEATING SETPOINT.

ALARMS SHALL BE PROVIDED AS FOLLOWS:
1. HIGH ZONE TEMPERATURE: IF THE ZONE TEMPERATURE IS GREATER THAN THE COOLING SETPOINT BY 2.8°C (ADJUSTABLE).
2. LOW ZONE TEMPERATURE: IF THE ZONE TEMPERATURE IS LESS THAN THE HEATING SETPOINT BY 2.8°C (ADJUSTABLE).

ZONE OPTIMAL START:
THE VAV TERMINAL UNIT SHALL USE AN OPTIMAL START ALGORITHM FOR MORNING START-UP. THIS ALGORITHM SHALL MINIMIZE THE UNOCCUPIED WARM-UP OR COOL-DOWN PERIOD WHILE STILL ACHIEVING COMFORT CONDITIONS BY THE START OF SCHEDULED OCCUPIED PERIOD.

VAV TERMINAL UNIT - FLOW CONTROL:
THE VAV TERMINAL UNITS SHALL MODULATE AIRFLOW FOR COMFORT COOLING AND HEATING THROUGH THE FOLLOWING MODES:

OCCUPIED (AS DETERMINED BY THE OCCUPANCY SCHEDULE):
1. WHEN ZONE TEMPERATURE IS GREATER THAN ITS COOLING SETPOINT, THE ZONE DAMPER SHALL MODULATE BETWEEN THE MINIMUM OCCUPIED AIRFLOW (ADJUSTABLE) AND MAXIMUM AIRFLOW (ADJUSTABLE) UNTIL THE ZONE IS SATISFIED.
2. WHEN THE ZONE TEMPERATURE IS BETWEEN THE COOLING SETPOINT AND THE HEATING SETPOINT, THE MINIMUM REQUIRED SETPOINT VENTILATION (ADJUSTABLE) AIR FLOW RATE SHALL BE DELIVERED.
3. WHEN ZONE TEMPERATURE IS LESS THAN ITS HEATING SETPOINT, THE CONTROLLER SHALL ENABLE HEATING TO MAINTAIN THE ZONE TEMPERATURE AT ITS HEATING SETPOINT. ADDITIONALLY, IF WARM AIR IS AVAILABLE FROM THE AHU (18.3°C, ADJUSTABLE) AND THE AHU COOLING COIL VALVE IS CLOSED, THE ZONE DAMPER SHALL MODULATE BETWEEN THE MINIMUM OCCUPIED AIRFLOW (ADJUSTABLE) AND THE MAXIMUM HEATING AIRFLOW (ADJUSTABLE) UNTIL THE ZONE IS SATISFIED.
4. WHEN THE OCCUPANCY SENSOR ON THE LIGHTING CONTROL PANEL INDICATES THE ZONE IS UNOCCUPIED, THE MINIMUM BOX POSITION SHALL BE 0 L/S (ADJUSTABLE).

UNOCCUPIED (AS DETERMINED BY THE OCCUPANCY SCHEDULE):
1. WHEN THE ZONE IS UNOCCUPIED, THE ZONE DAMPER SHALL CONTROL TO ITS MINIMUM OCCUPIED AIRFLOW (ADJUSTABLE).
2. WHEN THE ZONE TEMPERATURE IS ABOVE THE COOLING SETPOINT, THE ZONE DAMPER SHALL MODULATE BETWEEN THE MINIMUM UNOCCUPIED AIRFLOW (ADJUSTABLE) AND THE MAXIMUM AIRFLOW (ADJUSTABLE) UNTIL THE ZONE IS SATISFIED.
3. WHEN ZONE TEMPERATURE IS LESS THAN ITS UNOCCUPIED HEATING SETPOINT, THE CONTROLLER SHALL ENABLE HEATING TO MAINTAIN THE ZONE TEMPERATURE AT SETPOINT. THE UNIT SHALL DELIVER 23.9°C MAXIMUM AIR TEMPERATURE.

DISCHARGE AIR TEMPERATURE:
THE BAS SHALL MONITOR THE DISCHARGE AIR TEMPERATURE FROM THE VAV CONTROLLER. ALARMS SHALL BE PROVIDED AS FOLLOWS:
1. HIGH DISCHARGE AIR TEMPERATURE: IF THE DISCHARGE AIR TEMPERATURE IS GREATER THAN 37.8°C (ADJUSTABLE).
2. LOW DISCHARGE AIR TEMPERATURE: IF THE DISCHARGE AIR TEMPERATURE IS LESS THAN 10°C (ADJUSTABLE).

A6 TERMINAL UNIT - VAV CONTROL DIAGRAM & SEQUENCE
NTS

DRAFT

US Army Corps of Engineers
Japan District ®

FOR REVIEW ONLY
THESE DOCUMENTS ARE FOR CONCEPT DESIGN AND NOT INTENDED FOR CONSTRUCTION, BIDDING OR PERMIT PURPOSES. THEY WERE PREPARED BY, OR UNDER SUPERVISION OF:
BRIAN C. ALLERHEILIGEN
NAME
93876 09/04/2025
REGISTRATION # DATE
TEXAS REGISTERED ENGINEERING FIRM F-2966

MARK	DESCRIPTION	DATE

ISSUE DATE: 09/04/2025
SOLICITATION NO.:
CONTRACT NO.:
DRAWING CODE:

DESIGNED BY: K. WILKINS
DRAWN BY: C. WAYNES
CHECKED BY: B. SCHNEIDER
SUBMITTED BY: A. GUERRA
SIZE: ISO A1
FILE NAME: M-804

US ARMY CORPS OF ENGINEERS
JAPAN ENGINEER DISTRICT
OKINAWA, JAPAN

Jacobs
JACOBS GOVERNMENT SERVICES COMPANY
777 MAIN STREET, FORT WORTH, TX 76102
USA

FY25 REPAIR HVAC WIDEBAND SATCOM OPS B100
CAMP BUCKNER COMMUNICATIONS ANNEX
OKINAWA, JAPAN
PROJECT NUMBER:D3449305
HVAC CONTROLS

SHEET ID
M-804

M M-804-

FILE PATH: C:\Users\MOHAPPC\Documents\D3449305-M-3D_MOHAPPC.rvt
PLOT DATE: 8/29/2025 3:10:59 PM PLOTTED BY: PLOT SCALE: NTS

BACKCHECK SUBMITTAL DESIGN

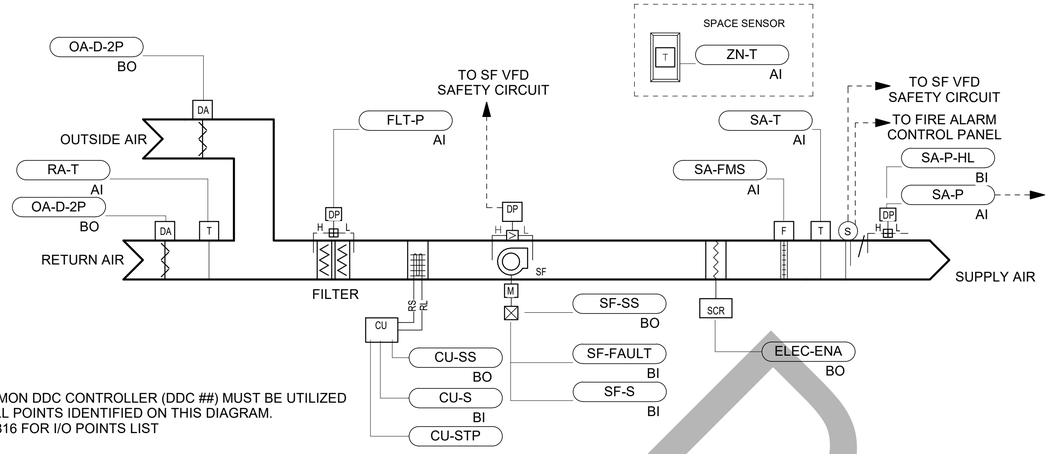

NOTES:
1. A COMMON DDC CONTROLLER (DDC ##) MUST BE UTILIZED FOR ALL POINTS IDENTIFIED ON THIS DIAGRAM.
2. RE: M-816 FOR I/O POINTS LIST

AIR HANDLING UNIT CONTROL SEQUENCE

RUN CONDITIONS - SCHEDULED:
UNIT FAN MUST RUN AS DEFINED BY THE BAS OPERATOR FOR OCCUPIED OR UNOCCUPIED HOURS CONSISTENT WITH THE BUILDING'S OPERATING SCHEDULE. THE SUPPLY FAN MUST RUN ANYTIME THE UNIT IS COMMANDED TO RUN, UNLESS SHUTDOWN ON SAFETIES. TO PREVENT SHORT CYCLING, THE SUPPLY FAN MUST HAVE A USER DEFINABLE MINIMUM RUNTIME OF 30 MINUTES (ADJUSTABLE). THE BAS MUST ALLOW THE UNIT TO BE PROGRAMMED FOR START AND STOP BASED ON A USER DEFINABLE SCHEDULE UNIQUE TO EACH DAY OF THE WEEK (SUNDAY THROUGH SATURDAY).

1. THE BAS MUST ALSO MONITOR THE SYSTEM COMPONENTS AND AUTOMATICALLY START IF THE SPACE TEMPERATURE SETPOINT IS NOT MET.

UNIT START:
THE UNIT MUST EMPLOY AN OPTIMAL START STRATEGY AND MUST START PRIOR TO SCHEDULED OCCUPANCY BASED ON THE TIME NECESSARY FOR THE AREA TO REACH ITS OCCUPIED SETPOINTS. UPON RECEIVING A START COMMAND, THE DAMPER AT THE INTAKE AND RETURN SHALL OPEN AND THE STATUS SHALL BE CONFIRMED. IF DAMPER STATUS IS NOT CONFIRMED OPEN AFTER ONE MINUTE (ADJUSTABLE) AN ALARM SHALL BE GENERATED AT THE BMS. WHEN THE BAS CALLS FOR THE UNIT TO START, THE FOLLOWING SEQUENCES MUST BE ACTIVATED:
1. SUPPLY FAN COMMANDED ON.
2. CONDENSING UNIT COMMANDED ON.

SUPPLY AIR TEMPERATURE SETPOINT CONTROL:
THE BAS MUST MONITOR THE UNIT DISCHARGE AIR TEMPERATURE (SA-T) AND MAINTAIN A FIXED SUPPLY AIR TEMPERATURE SETPOINT OF 12.8°C (ADJUSTABLE).

AREA TEMPERATURE CONTROL:
EACH UNIT MUST OPERATE AS DEFINED BY THE BUILDING AUTOMATION SYSTEM (BAS) OPERATOR FOR OCCUPIED OR UNOCCUPIED HOURS CONSISTENT WITH THE BUILDING'S OPERATING SCHEDULE.

1. OCCUPIED MODE (AS DETERMINED BY BAS SCHEDULE OR OCCUPANCY/VACANCY SENSORS):
   A. THE UNITS MUST MAINTAIN AREA COOLING AND HEATING SETPOINTS AS DEFINED ON M-001.
2. UNOCCUPIED MODE (NIGHT SETBACK): THE UNIT MUST MAINTAIN:
   A. 2.8°C (ADJUSTABLE) ABOVE THE ZONE'S COOLING SETPOINT.
   B. 2.8°C (ADJUSTABLE) BELOW THE ZONE'S HEATING SETPOINT.

COOLING:
THE COOLING CONTROL MODE MUST BE ENABLED WHENEVER:
1. WHEN THE AREA TEMPERATURE IS GREATER THAN ITS COOLING SETPOINT:
2. THE SUPPLY FAN STATUS IS ON;

AN ALARM MUST BE PROVIDED FOR HIGH SUPPLY AIR TEMPERATURE IF THE SUPPLY AIR TEMPERATURE IS 2.8°C (ADJUSTABLE) GREATER THAN THE DISCHARGE SETPOINT.

HEATING:
THE HEATING CONTROL MODE MUST BE ENABLED WHENEVER:
1. WHEN THE AREA TEMPERATURE IS LESS THAN ITS HEATING SETPOINT
2. THE SUPPLY FAN STATUS IS ON;

THE ELECTRIC HEATING COIL SHALL MODULATE TO INCREASE THE SUPPLY AIR TEMPERATURE TO 29.4°C (ADJUSTABLE).

FILTER DIFFERENTIAL PRESSURE MONITOR:
THE BAS MUST MONITOR THE DIFFERENTIAL PRESSURE ACROSS THE FILTER BANK. ALARM MUST BE PROVIDED WHEN FILTER DIFFERENTIAL PRESSURE EXCEEDS SETPOINT DETERMINED BY THE FILTER MANUFACTURER (ADJUSTABLE).

UNIT SHUTDOWN:
THE UNIT MUST SHUT DOWN IF ONE OF THE FOLLOWING CONDITIONS OCCURS:
1. SUPPLY AIR SMOKE DETECTION: SA DUCT DETECTORS SHALL BE HARD WIRED TO SHUT DOWN THE UNIT SUPPLY FAN UPON DETECTION OF SMOKE. THE SA SMOKE DETECTOR SHALL ALSO ADDRESS THE FIRE ALARM CONTROL PANEL, RE: FIRE PROTECTION.
2. SUPPLY FAN: SUPPLY FAN FAILURE ALARM PER THE FOLLOWING:
   a. SUPPLY FAN FAILURE: COMMANDED ON, BUT STATUS IS OFF.
   b. SUPPLY FAN IN HAND: COMMANDED OFF, BUT STATUS IS ON.
2. AN EMERGENCY SHUTDOWN SIGNAL FROM A CENTRAL SWITCH (PER UFC 4-010-01) WHEN A CHEMICAL OR BIOLOGICAL THREAT IS IMMINENT.
3. COMMANDED OFF BY BAS.

UNIT SHUTDOWN MUST ALIGN THE UNIT COMPONENTS TO THE FOLLOWING (REFER TO CONTROL DIAGRAM FOR ABBREVIATIONS): SUPPLY FAN (SF) OFF, INTERLOCKED EXHAUST FANS (EF-1, EF-2, EF-3), AND CONDENSING UNIT OFF. UPON SHUTDOWN ON ONE OF THE ABOVE FAULT CONDITIONS, THE BAS MUST GENERATE AN ALARM AT THE USER INTERFACE.

B1 AIR HANDLING UNIT (AHU-2) CONTROL DIAGRAM & SEQUENCE
NTS

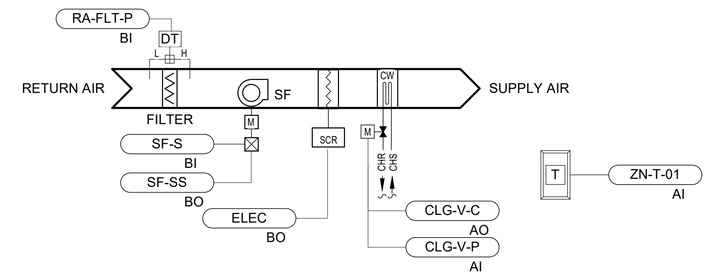

NOTES:
1. A COMMON DDC CONTROLLER (DDC ##) SHALL BE UTILIZED FOR ALL POINTS IDENTIFIED ON THIS DIAGRAM.

FCU-1 UNIT CONTROL SEQUENCE

RUN CONDITIONS - SCHEDULED:
EACH FAN COIL UNIT WILL RUN CONTINUOUSLY OR AS DEFINED BY THE BAS OPERATOR. THE SUPPLY FAN WILL RUN ANY TIME THE UNIT IS COMMANDED TO RUN. EACH FAN COIL UNIT SHALL RUN CONTINUOUSLY AND MAINTAIN THE SPACE TEMPERATURE SET POINTS INDICATED ON M-001.

ALARMS SHALL BE PROVIDED AS FOLLOWS:
1. HIGH ZONE TEMPERATURE: IF THE ZONE TEMPERATURE IS GREATER THAN THE COOLING SETPOINT BY 2.8ºC (ADJUSTABLE).
2. LOW ZONE TEMPERATURE: IF THE ZONE TEMPERATURE IS LESS THAN THE HEATING SETPOINT BY 2.8°C (ADJUSTABLE).
3. IF THE DIFFERENTIAL PRESSURE ACROSS THE FILTER BANK EXCEEDS SETPOINT (ADJUSTABLE). INITIAL PRESSURE SWITCH SETTING SHALL BE IN ACCORDANCE WITH FILTER MANUFACTURER RECOMMENDATION.

COOLING COIL CONTROL:
THE COOLING CONTROL MODE SHALL BE ENABLED WHENEVER:
1. THE SUPPLY FAN STATUS IS ON
2. THE HEATING COIL CONTROL VALVE IS CLOSED.

THE BAS WILL MONITOR THE ROOM TEMPERATURE AND ON INCREASE IN ROOM TEMPERATURE, OPEN THE COOLING COIL CHILLED WATER VALVE TO MAINTAIN THE DEFINED SETPOINT.

SCR ELECTRIC HEATING COIL CONTROL:
THE HEATING CONTROL MODE SHALL BE ENABLED WHENEVER:
1. THE SUPPLY FAN IS ON.
2. THE CHILLED WATER COOLING COIL CONTROL VALVE IS CLOSED.

THE BAS SHALL MONITOR THE ROOM TEMPERATURE (T-01) AND, ON DROP IN ROOM TEMPERATURE, THE ELECTRIC HEATING COIL SHALL MODULATE TO INCREASE THE SUPPLY AIR TEMPERATURE TO 29.4ºC.

UNIT SHUTDOWN:
THE UNIT WILL SHUT DOWN AND GENERATE AN ALARM AT THE BAS IF ONE OF THE FOLLOWING CONDITIONS OCCURS:
1. COMMANDED OFF BY BAS.
2. WATER IS SENSED BY AUXILIARY DRAIN PAN SENSOR.
3. COMMANDED OFF BY THE FIRE ALARM CONTROL PANEL.

UPON UNIT SHUTDOWN THE FOLLOWING SHALL OCCUR:
1. SUPPLY FAN OFF.
2. HEATING COIL DEENERGIZED.
3. CHILLED WATER COIL VALVE CLOSED.

B7 FCU-1 CONTROL DIAGRAM
NTS

DRAFT

US Army Corps of Engineers
Japan District ®

FOR REVIEW ONLY
THESE DOCUMENTS ARE FOR CONCEPT DESIGN AND NOT INTENDED FOR CONSTRUCTION, BIDDING OR PERMIT PURPOSES. THEY WERE PREPARED BY, OR UNDER SUPERVISION OF:
BRIAN C. ALLERHEILIGEN
NAME
93876 REGISTRATION # 09/04/2025 DATE
TEXAS REGISTERED ENGINEERING FIRM F-2966

MARK	DESCRIPTION	DATE

ISSUE DATE: 09/04/2025
SOLICITATION NO.:
CONTRACT NO.:
DRAWING CODE:

DESIGNED BY: K. WILKINS
DRAWN BY: C. WEEKES
CHECKED BY: B. SCHNEIDER
SUBMITTED BY: A. GUERRA
FILE NAME: M-805
SIZE: ISO A1

US ARMY CORPS OF ENGINEERS
JAPAN ENGINEER DISTRICT
OKINAWA, JAPAN

Jacobs
JACOBS GOVERNMENT SERVICES COMPANY
777 MAIN STREET, SUITE 1300 FORT WORTH, TX 76102 USA

FY25 REPAIR HVAC WIDEBAND SATCOM OPS B100
CAMP BUCKNER COMMUNICATIONS ANNEX
OKINAWA, JAPAN
PROJECT NUMBER:D3449305

HVAC CONTROLS

SHEET ID
M-805

M M-805-

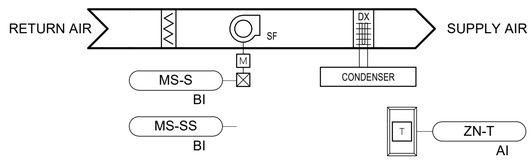

MINI-SPLIT SYSTEM SEQUENCE OF OPERATION

GENERAL:
DUCTLESS SPLIT SYSTEMS EACH CONSIST OF A CONDENSING UNIT AND A SINGLE ASSOCIATED WALL MOUNTED OR CEILING CASSETTE FAN COIL UNIT.

RUN CONDITIONS:
THE SPLIT SYSTEM SHALL RUN ACCORDING TO ITS OWN INTERNAL CONTROLS TO MEET EACH SPACE TEMPERATURE SET POINT IN EACH ZONE. THE BAS SHALL MONITOR THE SPACE TEMPERATURE AND FAN STATUS.

SYSTEM FAULT:
ALARMS SHALL BE PROVIDED AS FOLLOWS:
1. HIGH TEMPERATURE: IF THE SPACE TEMPERATURE IN THE ROOM IS 2.8ºC ABOVE THE COOLING SETPOINT.
2. LOW TEMPERATURE: IF THE SPACE TEMPERATURE IN THE ROOM IS 2.8ºC BELOW THE HEATING SETPOINT.

D1 MINI-SPLIT SYSTEM/CEILING CASSETTE CONTROL DIAGRAM & SEQUENCE
NTS

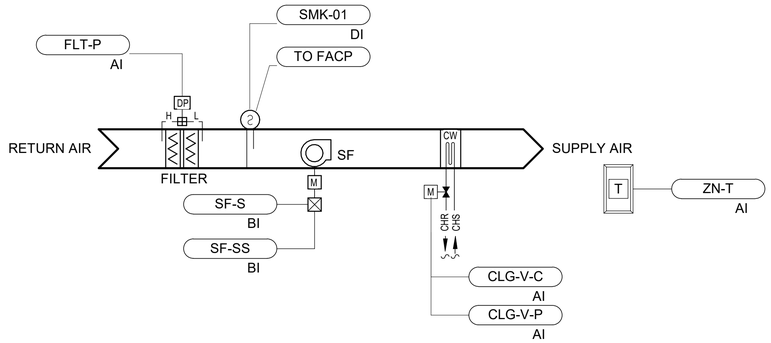

COMPUTER ROOM AIR CONDITIONER (CRAC) UNIT CONTROL SEQUENCE

RUN CONDITIONS:
THE CRAC UNITS WILL BE SIZED AND CONFIGURED TO PORVIDE N+2 REDUNDANCY. ON COMMAND FROM THE BAS, THE CRAC UNITS WILL BE ENABLED TO OPERATED LEAD-LAG-STANDBY CONTINUOUSLY TO MAINTAIN SPACE TEMPERATURE SETPOINT. THE CRAC UNITS WILL RUN BASED ON THEIR INTERNAL CONTROLS AND SAFETIES, AND COMMUNICATE AS A UNIT, ROTATING THE LEAD, LAG, AND STANDBY UNIT DESIGNATIONSON ON A REGULAR BASIS TO MAINTAIN SIMILAR RUNTIMES AMONG EACH INDIVIDUAL UNIT AS FOLLOWS:

1. CRAC RUNTIME
2. SCHEDULING, SUCH AS ROTATING ONCE PER DAY OR WEEK (ADJUSTABLE).

ALARMS SHALL BE PROVIDED AS FOLLOWS:
1. HIGH ZONE TEMPERATURE: IF THE ZONE TEMPERATURE IS GREATER THAN THE COOLING SETPOINT BY 2.8ºC (ADJUSTABLE).
2. LOW ZONE TEMPERATURE: IF THE ZONE TEMPERATURE IS LESS THAN THE HEATING SETPOINT BY 2.8°C (ADJUSTABLE).
3. IF THE DIFFERENTIAL PRESSURE ACROSS THE FILTER BANK EXCEEDS SETPOINT (ADJUSTABLE). INITIAL PRESSURE SWITCH SETTING SHALL BE IN ACCORDANCE WITH FILTER MANUFACTURER RECOMMENDATION.
4. IF SMOKE IS DETECTED IN THE UNIT VIA THE SMOKE DETECTOR, CRAC UNIT SHALL SHUT DOWN AND SEND AN ALARM TO THE FIRE ALARM CONTROL PANEL.

COOLING COIL CONTROL:
THE COOLING CONTROL MODE SHALL BE ENABLED WHENEVER:
1. THE SUPPLY FAN STATUS IS ON

THE UNITS SELF CONTAINED CONTROLS WILL MONITOR ROOM TEMPERATURE AND ON INCREASE IN ROOM TEMPERATURE, OPEN THE COOLING COIL CHILLED WATER VALVE TO MAINTAIN THE DEFINED SETPOINT.

D6 COMPUTER ROOM AIR CONDTIONER CONTROL DIAGRAM (CRAC)
NTS

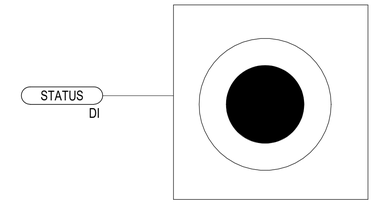

EMERGENCY SHUTOFF BUTTON

EMERGENCY SHUTOFF BUTTON SEQUENCE OF OPERATIONS

A. GENERAL
THE HVAC SYSTEM SHALL BE INSTALLED WITH AN EMERGENCY SHUTDOWN SYSTEM. THIS SYSTEM SHALL BE PART OF THE TEMPERATURE CONTROLS SYSTEM. SYSTEM SHALL BE ACTIVATED BY PRESSING ONE OF THE 'HVAC SYSTEM EMERGENCY SHUTDOWN BUTTON' CLEARLY LABELED AND LOCATED WHERE SHOWN ON THE DRAWINGS. BUTTONS SHALL BE DIFFERENT COLOR THAN FIRE ALARM. EMERGENCY HVAC SHUTDOWN BUTTONS SHALL BE DOUBLE ACTION SWITCH. LABEL SWITCH WITH PLASTIC LAMINATE PLACARD STATING THE FOLLOWING: "EMERGENCY HVAC SHUTDOWN SWITCH" SEE PLANS FOR LOCATIONS OF SWITCH.

B. DDC MONITORING
THE DDC SYSTEM SHALL MONITOR THE STATUS OF THE EMERGENCY SHUTDOWN SWITCH.

C. EQUIPMENT SHUTDOWN
WITHIN 30 SECONDS FANS SHALL BE SHUTDOWN WHEN ANY BUTTON IS PRESSED. ALL HVAC SYSTEMS SERVING OCCUPIED AREAS OF THE BUILDING SHALL GO INTO OFF MODE; FANS SHALL DE-ENERGIZE THROUGH THE MOTOR STARTER OR VFD SAFETY CIRCUITS AND THE DDC SYSTEM SHALL PLACE UNITS INTO OFF MODE. OUTSIDE AIR, INTAKE AIR, EXHAUST AIR, AND RELIEF AIR DAMPERS SHALL FULLY CLOSE. VAV BOX DAMPERS SHALL FULLY CLOSE.

D. EMERGENCY SHUT OFF SHALL BE COMMUNICATED TO THE FOLLOWING DEVICES:
DOAS-1, DOAS-2, AHU-1, AHU-2, ALL FCUS, ALL VAVS.

E. REFER TO HVAC PLAN DRAWING FOR LOCATION OF EMERGENCY SHUTOFF BUTTONS.

CONTROL PANEL SHALL CONTAIN 'EMERGENCY SHUTDOWN' AND 'SYSTEM RESET' BUTTONS AND BE PROVIDED WITH ALL RELAYS AND CONTACTS REQUIRED FOR COMPLETE SYSTEM OPERATION. 'SYSTEM RESET' BUTTON SHALL RESTART ALL SYSTEMS.

D8 EMERGENCY POWER OFF BUTTON CONTROL SEQUENCE & DIAGRAM
NOT TO SCALE

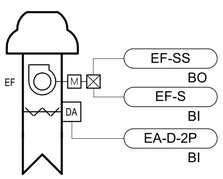

EXHAUST FAN

NOTES:
1. ALL DAMPERS MUST BE LOW LEAKAGE DAMPERS WITH MAXIMUM LEAKAGE OF 15.2 L/SM2 AT 249 PA.
2. REFER TO M-815 FOR I/O POINTS LIST.

ROOF/SIDEWALL EXHAUST FAN SEQUENCE OF OPERATION

RUN CONDITIONS - CONTINUOUS:
EXHAUST FANS MUST RUN CONTINUOUSLY, ACCORDING TO THE USER INTERFACE, OR AS COMMANDED BY THE BASE BAS OPERATOR INTERFACE.

WHEN COMMANDED ON THE EXHAUST AIR DAMPER MUST OPEN, IF THE DAMPER STATUS IS NOT CONFIRMED AFTER 1 MINUTE (ADJUSTABLE) AN ALARM MUST BE SENT TO THE BAS AND THE EXHAUST FAN MUST BE DISABLED.

EF RUN CONDITIONS - CONTINUOUS:
EXHAUST FAN MUST RUN CONTINUOUSLY.

FAN:
THE FAN MUST HAVE A USER DEFINABLE MINIMUM RUNTIME OF 30 MINUTES (ADJUSTABLE).

FAN STATUS:
THE BAS MUST MONITOR THE FAN STATUS, AND PROVIDE AN ALARM TO THE USER INTERFACE PANEL FOR THE FOLLOWING:
1. FAN FAILURE: COMMANDED ON, BUT FAN STATUS IS OFF.
2. FAN IN HAND: COMMANDED OFF, BUT FAN STATUS IS ON.
3. FAN RUNTIME EXCEEDED: FAN STATUS RUNTIME EXCEEDS A USER DEFINABLE LIMIT (ADJUSTABLE).

UNIT SHUTDOWN:
THE UNIT MUST SHUT DOWN IF ONE OF THE FOLLOWING CONDITIONS OCCURS. UNIT SHUTDOWN MUST ALIGN THE UNIT COMPONENTS TO THE FOLLOWING: EXHAUST FAN OFF, DAMPER CLOSED. UPON SHUTDOWN ON ONE OF THE FOLLOWING FAULT CONDITIONS, THE BAS MUST GENERATE AN ALARM AT THE USER INTERFACE.
1. ATFP EMERGENCY SHUTDOWN: AN EMERGENCY SHUTDOWN SIGNAL FROM A CENTRAL PUSH BUTTON SWITCH WHEN A CHEMICAL OR BIOLOGICAL THREAT IS IMMINENT.
2. FAN: FAN FAILURE ALARM PER THE FOLLOWING:
   a. EXHAUST FAN FAILURE: COMMANDED ON, BUT STATUS IS OFF.
   b. EXHAUST FAN IN HAND: COMMANDED OFF, BUT STATUS IS ON.
3. CORRESPONDING DOAS OR AHU FAN IS SHUT OFF

A1 CONTINUOUS ROOF EF DIAGRAM & SEQUENCE
NTS

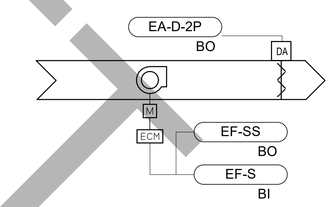

NOTES:
1. ALL DAMPERS SHALL HAVE A MAXIMUM LEAKAGE OF 15.2 L/SM2 AT 249 PA.
2. A COMMON DDC CONTROLLER (DDC ##) SHALL BE UTILIZED FOR ALL POINTS IDENTIFIED ON THIS DIAGRAM.

EXHAUST FANS:
EXHAUST FANS (EF-5) SERVES RESTROOM EXHAUST.

RUN CONDITIONS
EF-1 SHALL RUN CONTINUOUSLY AT THE SCHEDULED AIRFLOW SETPOINT DURING OCCUPIED HOURS.
THE FAN WILL HAVE A USER DEFINABLE MINIMUM RUN TIME OF 15 MINUTES (ADJUSTABLE).

FAN STATUS:
THE BAS WILL MONITOR THE FAN STATUS, AND PROVIDE AN ALARM TO THE USER INTERFACE PANEL FOR THE FOLLOWING:
1. FAN FAILURE: COMMANDED ON, BUT FAN STATUS IS OFF.
2. FAN IN HAND: COMMANDED OFF, BUT FAN STATUS IS ON.
3. FAN RUNTIME EXCEEDED: FAN STATUS RUNTIME EXCEEDS A USER DEFINABLE LIMIT (ADJUSTABLE).

UNIT SHUTDOWN:
THE UNIT WILL SHUT DOWN IF ONE OF THE FOLLOWING CONDITIONS OCCURS. UNIT SHUTDOWN WILL ALIGN THE UNIT COMPONENTS TO THE FOLLOWING: EXHAUST FAN OFF, DAMPERS CLOSED. UPON SHUTDOWN ON ONE OF THE FOLLOWING FAULT CONDITIONS, THE BAS WILL GENERATE AN ALARM AT THE USER INTERFACE.

1. AT/FP EMERGENCY SHUTDOWN:
   A. AN EMERGENCY SHUTDOWN SIGNAL FROM A AT/FP EMERGENCY SHUTDOWN SWITCH WHEN A CHEMICAL OR BIOLOGICAL THREAT IS IMMINENT. WHEN AT/FP SWITCH IS RESET, FAN SHALL RESUME NORMAL OPERATION.
2. CORRESPONDING DOAS OR AHU FAN IS SHUT OFF

A6 INLINE/CEILING EXHAUST FAN CONTROL DIAGRAM AND SEQUENCE
N.T.S.

DRAFT

US Army Corps of Engineers
Japan District ®

FOR REVIEW ONLY
THESE DOCUMENTS ARE FOR CONCEPT DESIGN AND NOT INTENDED FOR CONSTRUCTION, BIDDING OR PERMIT PURPOSES. THEY WERE PREPARED BY, OR UNDER SUPERVISION OF:
BRIAN C. ALLERHEILIGEN
NAME
93876 09/04/2025
REGISTRATION # DATE
TEXAS REGISTERED ENGINEERING FIRM F-2966

MARK	DESCRIPTION	DATE

ISSUE DATE: 09/04/2025
SOLICITATION NO.:
CONTRACT NO.:
DRAWING CODE:
DESIGNED BY: K. WILKINS
DRAWN BY: C. WITTWER
CHECKED BY: B. SCHNEIDER
SUBMITTED BY: A. GUERRA
FILE NAME: M-806
SIZE: ISO A1

US ARMY CORPS OF ENGINEERS
JAPAN ENGINEER DISTRICT
OKINAWA, JAPAN

Jacobs
JACOBS GOVERNMENT SERVICES COMPANY
777 MAIN STREET, FORT WORTH, TX 76102
USA

FY25 REPAIR HVAC WIDEBAND SATCOM OPS B100
CAMP BUCKNER COMMUNICATIONS ANNEX
OKINAWA, JAPAN
PROJECT NUMBER:D3449305
HVAC CONTROLS

SHEET ID
M-806

M M-806-

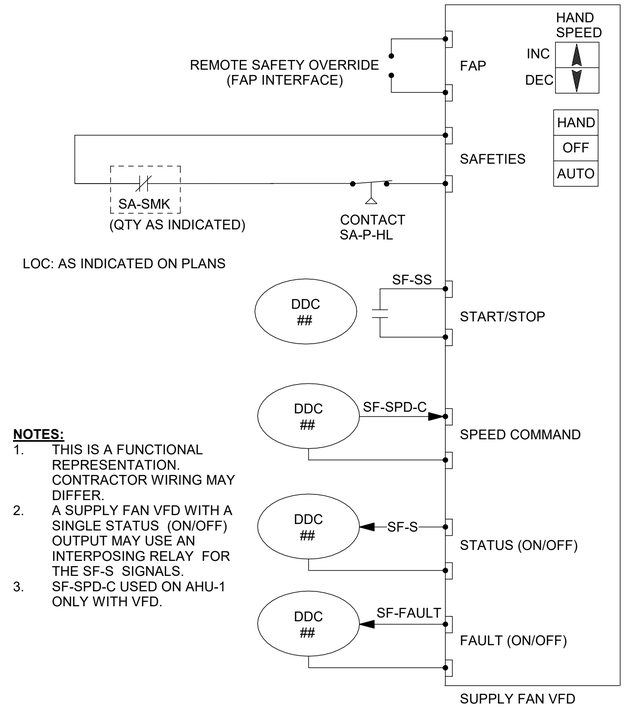

NOTES:
1. THIS IS A FUNCTIONAL REPRESENTATION. CONTRACTOR WIRING MAY DIFFER.
2. A SUPPLY FAN VFD WITH A SINGLE STATUS (ON/OFF) OUTPUT MAY USE AN INTERPOSING RELAY FOR THE SF-S SIGNALS.
3. SF-SPD-C USED ON AHU-1 ONLY WITH VFD.

D1 AHU-1,2 LADDER DIAGRAM
NTS

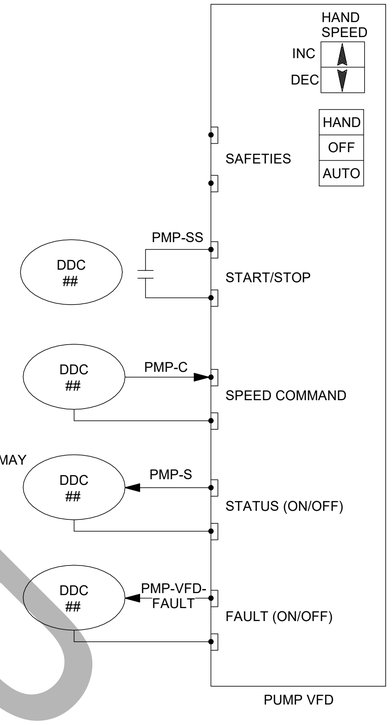

NOTES:
1. THIS IS A FUNCTIONAL REPRESENTATION. CONTRACTOR WIRING MAY DIFFER.

D4 CHW PUMP LADDER DIAGRAM
NTS

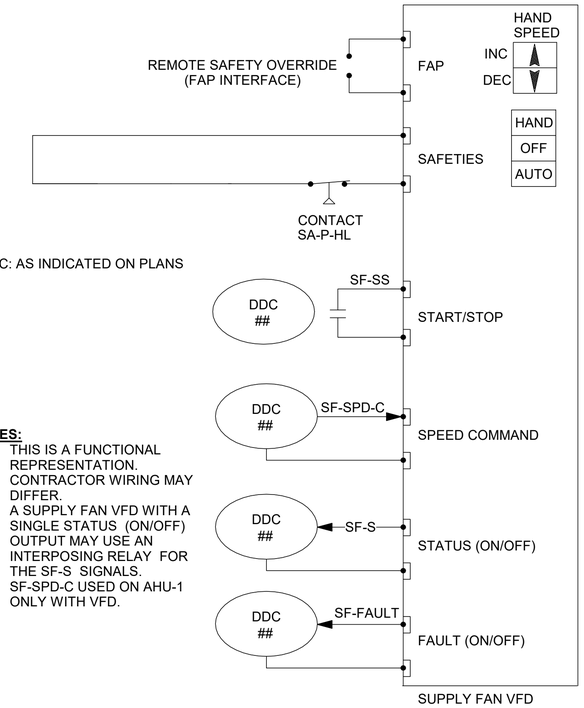

NOTES:
1. THIS IS A FUNCTIONAL REPRESENTATION. CONTRACTOR WIRING MAY DIFFER.
2. A SUPPLY FAN VFD WITH A SINGLE STATUS (ON/OFF) OUTPUT MAY USE AN INTERPOSING RELAY FOR THE SF-S SIGNALS.
3. SF-SPD-C USED ON AHU-1 ONLY WITH VFD.

D8 DOAS-1,2 LADDER DIAGRAM
NTS

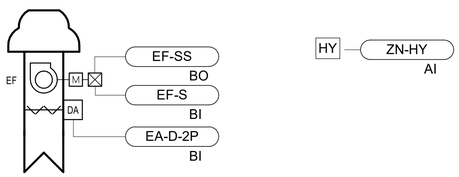

EXHAUST FAN

NOTES:
1. ALL DAMPERS MUST BE LOW LEAKAGE DAMPERS WITH MAXIMUM LEAKAGE OF 15.2 L/SM2 AT 249 PA.
2. REFER TO M-815 FOR I/O POINTS LIST.

BATTERY ROOM EXHAUST FAN SEQUENCE OF OPERATION

RUN CONDITIONS:
WHEN HYDROGEN IS SENSED IN EXCESS OF 0.5% CONCENTRATION, FAN SHALL BE ENEBLED. UPON RECEIVING A START COMMAND, THE MOTORIZED CONTROL DAMPERS AT THE INTAKE AIR OPENING SHALL OPEN AND THE STATUS SHALL BE CONFIRMED. IF DAMPER STATUS IS NOT CONFIRMED OPEN AFTER 1 MINUTE (ADJUSTABLE) AN ALARM SHALL BE GENERATED AT THE BAS.

WHEN COMMANDED ON THE EXHAUST AIR DAMPER MUST OPEN, IF THE DAMPER STATUS IS NOT CONFIRMED AFTER 1 MINUTE (ADJUSTABLE) AN ALARM MUST BE SENT TO THE BAS AND THE EXHAUST FAN MUST BE DISABLED.

FAN:
THE FAN MUST HAVE A USER DEFINABLE MINIMUM RUNTIME OF 30 MINUTES (ADJUSTABLE).

FAN STATUS:
THE BAS MUST MONITOR THE FAN STATUS, AND PROVIDE AN ALARM TO THE USER INTERFACE PANEL FOR THE FOLLOWING:
1. FAN FAILURE: COMMANDED ON, BUT FAN STATUS IS OFF.
2. FAN IN HAND: COMMANDED OFF, BUT FAN STATUS IS ON.
3. FAN RUNTIME EXCEEDED: FAN STATUS RUNTIME EXCEEDS A USER DEFINABLE LIMIT (ADJUSTABLE).

UNIT SHUTDOWN:
THE UNIT MUST SHUT DOWN IF ONE OF THE FOLLOWING CONDITIONS OCCURS. UNIT SHUTDOWN MUST ALIGN THE UNIT COMPONENTS TO THE FOLLOWING: EXHAUST FAN OFF, DAMPER CLOSED. UPON SHUTDOWN ON ONE OF THE FOLLOWING FAULT CONDITIONS, THE BAS MUST GENERATE AN ALARM AT THE USER INTERFACE.
1. FAN: FAN FAILURE ALARM PER THE FOLLOWING:
   a. EXHAUST FAN FAILURE: COMMANDED ON, BUT STATUS IS OFF.
   b. EXHAUST FAN IN HAND: COMMANDED OFF, BUT STATUS IS ON.

A1 BATTERY ROOM EF DIAGRAM & SEQUENCE
NTS

DRAFT

US Army Corps of Engineers
Japan District ®

FOR REVIEW ONLY
THESE DOCUMENTS ARE FOR CONCEPT DESIGN AND NOT INTENDED FOR CONSTRUCTION, BIDDING OR PERMIT PURPOSES. THEY WERE PREPARED BY, OR UNDER SUPERVISION OF:
BRIAN C. ALLERHEILIGEN
NAME
93876 09/04/2025
REGISTRATION # DATE
TEXAS REGISTERED ENGINEERING FIRM F-2966

MARK	DESCRIPTION	DATE

ISSUE DATE: 09/04/2025
SOLICITATION NO.:
CONTRACT NO.:
DRAWING CODE:

DESIGNED BY: K. WILKINS
DRAWN BY: C. HAYNES
CHECKED BY: B. SCHNEIDER
SUBMITTED BY: A. GUERRA
SIZE: ISO A1
FILE NAME: M-807

US ARMY CORPS OF ENGINEERS
JAPAN ENGINEER DISTRICT
OKINAWA, JAPAN

Jacobs
JACOBS GOVERNMENT SERVICES COMPANY
777 MAIN STREET / FORT WORTH, TX 76102
USA

FY25 REPAIR HVAC WIDEBAND SATCOM OPS B100
CAMP BUCKNER COMMUNICATIONS ANNEX
OKINAWA, JAPAN
PROJECT NUMBER:D3449305

HVAC CONTROLS

SHEET ID
M-807

M M-807-

FILE PATH: C:\Users\MOHAPPC\Documents\D3449305-M-3D_MOHAPPC.rvt
PLOT DATE: 8/29/2025 3:11:01 PM PLOTTED BY: PLOT SCALE: NTS

BACKCHECK SUBMITTAL DESIGN

T-STAT SCHEDULE

SYSTEM SERVICE	SPACES SERVED	STAT LOCATION	ZN-T	ZN-T-SP ADJ	UNOCCUPIED OVERRIDE	UNOCCUPIED OVERRIDE TIME	OCC SENSOR	NOTES
VAV BOXES	REFER TO VAV SCHEDULE	REFER TO PLANS	X	+/- 2 DEG	~	~	X	1
AHU	REFER TO AHU SCHEDULE	REFER TO PLANS	X	+/- 2 DEG	~	~	~	-
FCU	REFER TOFCU SCHEDULE	REFER TO PLANS	X	~	~	~	~	-
CRAC	REFER TO CRAC SCHEDULE	REFER TO PLANS	X	~	~	~	~	-

NOTES:

1. OCCUPANT SENSOR MAY BE PROVIDED BY LIGHTING CONTROL PANEL OR THROUGH AVAILABLE TWISTED PAIR.
2. REFER TO PLANS FOR QUANITY AND TO SYSTEM SEQUENCE OF OPERATION.

OCCUPANCY SCHEDULE

SYSTEM	UNOCCUPIED	SYSTEM DEFAULT OCCUPIED SCHEDULE	SUPERVISORY MONITORING & CONTROL OCCUPIED SCHEDULE	BUILDING WARM-UP/COOLDOWN	# OCC SENSORS TO PUT IN OCC MODE
AHU-1	UNLESS OTHERWISE NOTED	M-F 0700-1900	M-F 0800-1800	NOTE: 1	1
AHU-2	UNLESS OTHERWISE NOTED	M-F 0700-1900	M-F 0800-1800	NOTE: 1	N/A
DOAS-1	UNLESS OTHERWISE NOTED	M-F 0700-1900	M-F 0800-1800	NOTE: 1	1
DOAS-2	UNLESS OTHERWISE NOTED	M-F 0700-1900	M-F 0800-1800	NOTE: 1	N/A
CRAC	UNLESS OTHERWISE NOTED	24/7	24/7	N/A	N/A
FCU	UNLESS OTHERWISE NOTED	24/7	24/7	N/A	N/A
AHU-3	UNLESS OTHERWISE NOTED	M-F 0700-1900	M-F 0800-1800	NOTE: 1	N/A

NOTES:

1. DEFAULT SCHEDULE IS 1 HOUR PRIOR TO OCCUPIED MODE, HOWEVER DDC SHALL MONITOR SPACE TEMPERATURES AND OUTSIDE CONDITIONS FOR OPTIMAL STARTUP ROUTINE.
2. REFER TO PLANS FOR QUANITY AND TO SYSTEM SEQUENCE OF OPERATION.

PRESSURE INDEPENDENT CONTROL VALVE SCHEDULE

DESCRIPTOR	SYSTEM	LOCATION	DESIGN FLOW RATE	DESIGN PRESSURE DROP	VALVE SIZE	FUNCTION	TYPE	NOTES
CHW MIN FLOW	CHILLED WATER	MECHANICAL ROOM		10	50	MINIMUM FLOW BYPASS	2-WAY, LINEAR CHARACTERISTICS	1
CRACS	CHILLED WATER	REFER TO PLANS	16.8 LPS	10	50	TEMPERATURE CONTROL	2-WAY, EQUAL PERCENTAGE	2
DOAS-1 CC	CHILLED WATER	MECHANICAL ROOM	1.6 LPS	10	20	TEMPERATURE CONTROL	2-WAY, EQUAL PERCENTAGE	
AHU-1 CC	CHILLED WATER	MECHANICAL ROOM	0.44 LPS	10	25	TEMPERATURE CONTROL	2-WAY, EQUAL PERCENTAGE	
AHU-3 CC	CHILLED WATER	MECHANICAL ROOM	0.33 LPS	10	20	TEMPERATURE CONTROL	2-WAY, EQUAL PERCENTAGE	

NOTES:

1. VERIFY MINIMUM FLOW RATES AND VALVE SELECTION WITH APPROVED CHILLER AND BOILER MINIMUM FLOW REQUIREMENTS.
2. VERIFY TO SCHEDULES FOR VAV & FCU DESIGN FLOW RATES.

DRAFT

US Army Corps of Engineers
Japan District ®

FOR REVIEW ONLY

THESE DOCUMENTS ARE FOR CONCEPT DESIGN AND NOT INTENDED FOR CONSTRUCTION, BIDDING OR PERMIT PURPOSES. THEY WERE PREPARED BY, OR UNDER SUPERVISION OF:

BRIAN C. ALLERHEILIGEN
NAME
93876 09/04/2025
REGISTRATION # DATE
TEXAS REGISTERED ENGINEERING FIRM F-2966

MARK	DESCRIPTION	DATE

ISSUE DATE: 09/04/2025
SOLICITATION NO.:
CONTRACT NO.:
DRAWING CODE:

DESIGNED BY: K. WILKINS
DRAWN BY: CH WITNESS
CHECKED BY: B. SCHNEIDER
SUBMITTED BY: A. GUERRA
SIZE: ISO A1
FILE NAME: M-808

US ARMY CORPS OF ENGINEERS
JAPAN ENGINEER DISTRICT
OKINAWA, JAPAN

Jacobs
JACOBS GOVERNMENT SERVICES COMPANY
777 MAIN STREET / FORT WORTH, TX 76102
USA

FY25 REPAIR HVAC WIDEBAND SATCOM OPS B100
CAMP BUCKNER COMMUNICATIONS ANNEX
OKINAWA, JAPAN
PROJECT NUMBER:D3449305

HVAC CONTROLS

SHEET ID
M-808

POINT SCHEDULE INSTRUCTIONS FOR UFGS-23 09 23.02 CONTRACTOR

GENERAL:

1. THE CONTRACT DRAWING POINTS SCHEDULES ASSUME THAT THE ENTIRE SEQUENCE OF OPERATION IS PERFORMED IN A SINGLE PIECE OF DDC HARDWARE. IN CASES WHERE MULTIPLE PIECES OF DDC HARDWARE ARE USED (INCLUDING CEA-709.1 NETWORKED SENSORS AND ACTUATORS), SEPARATE THE POINTS SCHEDULE INTO SEPARATE TABLES EACH WITH ITS OWN HEADER INFORMATION (SEE BELOW) SO THAT EACH PIECE OF DDC HARDWARE HAS A TABLE DEDICATED TO IT. ALL TABLES FOR A SINGLE SEQUENCE OF OPERATION SHALL BE ON A SINGLE DRAWING WHICH MAY SPAN MULTIPLE SHEETS. SHOW COMMUNICATION BETWEEN MULTIPLE PIECES OF DDC HARDWARE PERFORMING A COMMON SEQUENCE THROUGH THE USE OF NVI AND NVO ENTRIES IN THE I/O COLUMN (SEE I/O COLUMN INSTRUCTIONS BELOW), ADDING ROWS TO THE TABLE(S) AS NEEDED.

2. ENTRIES SHOWN BRACKETED AS: < ___ > ARE REQUIRED ENTRIES UNDER UFGS-23 09 23.02. SOME ENTRIES WITHOUT BRACKETS MAY BE REQUIRED IN SOME INSTANCES AS DESCRIBED IN THESE INSTRUCTIONS.

   SPACES WHERE NO ENTRY IS ORDINARILY REQUIRED CONTAINS A TILDE: " ~ " (EQUIVALENT TO AN "N/A" OR NULL VALUE)

   WHEN AN ENTRY APPEARS INSIDE OF BRACKETS, IT IS A RECOMMENDED ENTRY THAT MUST BE VERIFIED OR CHANGED BY THE APPROPRIATE PARTY (AS INDICATED BY THE BRACKET TYPE). WHEN EDITING THE POINT SCHEDULES, DELETE THE BRACKETS AFTER VERIFYING/PROVIDING THE ENTRY. DO NOT LEAVE CELLS BLANK, INSTEAD SHOW THE TILDE ("~") TO INDICATE A NULL VALUE OR THAT NO FURTHER ENTRY IS REQUIRED.

HEADER INFORMATION INSTRUCTIONS:

1. DDC HARDWARE IDENTIFIER: SHOW THE IDENTIFIER FOR EACH PIECE OF DDC HARDWARE. MAINTAIN CONSISTENCY AND UNIQUENESS OF DDC HARDWARE IDENTIFIERS BETWEEN ALL DRAWINGS.

2. DDC HARDWARE LOCATION: SHOW THE PHYSICAL LOCATION OF THE DEVICE. LOCATION SHALL INCLUDE THE BUILDING AND ROOM NUMBER AND MAY ALSO INCLUDE FURTHER INFORMATION SUCH AS ENCLOSURE/PANEL IDENTIFICATION.

3. NODE ADDRESS: SHOW THE DOMAIN, SUBNET AND NODE ADDRESSES FOR ALL DEVICES ON THE NETWORK.

4. NODE ID: SHOW THE MANUFACTURER SUPPLIED NODE ID (ALSO CALLED THE NEURONID) FOR EACH DEVICE.

"GENERAL" COLUMNS:

1. NAME COLUMN: SHOW POINT NAMES AS NEEDED AND AS INDICATED BY BRACKETS (<___>). THE NAME SHALL BE CONSISTENT WITH POINT NAMES SHOWN ON ALL OTHER DRAWINGS AND SHALL USE THE ESTABLISHED POINT ABBREVIATIONS.

2. SETTING COLUMN: CONFIGURE DEVICES TO USE THE SETPOINTS AND SETTINGS SHOWN. WHEN A SETPOINT OR SETTING IS NOT SHOWN, USE VALUES IN ACCORDANCE WITH THE SPECIFICATION AND SHOW THE SETPOINT OR SETTING USED. INCLUDE THE APPROPRIATE ENGINEERING UNITS FOR ENTRIES IN THIS COLUMN.

3. RANGE COLUMN: CONFIGURE DEVICES TO USE THE RANGES SHOWN. WHEN A RANGE IS NOT SHOWN, USE VALUES IN ACCORDANCE WITH THE SPECIFICATION AND SHOW THE RANGE USED. FOR SENSORS SHOW THE ACTUAL SENSOR RANGE (THIS RANGE MUST AT LEAST ENCOMPASS THE RANGE SPECIFIED IN SECTION 23 09 23.02). FOR DAMPER ACTUATORS SHOW THE ACTUAL RANGE OVER WHICH THE VALVE OR DAMPER IS ACTUATED. INCLUDE THE APPROPRIATE ENGINEERING UNITS FOR ENTRIES IN THIS COLUMN.

4. NCI/CP NAME COLUMN: ENTRIES IN THIS COLUMN ARE ONLY REQUIRED FOR GENERAL PURPOSE PROGRAMMABLE CONTROLLERS (GPPC) OR APPROVED APPLICATION SPECIFIC CONTROLLERS (ASC) LACKING LONWORKS NETWORK SERVICES (LNS) PLUG-INS. SHOW ALL NETWORK CONFIGURATION INPUTS (NCI) OR CONFIGURATION PROPERTIES (CP) THAT RELATE TO THE POINT. FOR CPS OF A USER-DEFINED NETWORK CONFIGURATION PARAMETER TYPE (UCPT), PROVIDE EITHER THE STANDARD NETWORK VARIABLE TYPE (SNVT) THAT RELATES TO THE CP, OR (FOR UCPTS NOT BASED ON A SNVT) PROVIDE DETAILED DESCRIPTIONS OF THE FIELDS AND UNITS OF EACH CP. EXPAND ROWS AND USE ADDITIONAL SHEETS AS REQUIRED TO PROVIDE CONFIGURATION PROPERTY DESCRIPTIONS.

5. I/O TYPE COLUMN: SHOW THE I/O TYPE FOR EACH POINT AS ONE (OR MORE) OF THE FOLLOWING:
   - AI FOR ANALOG INPUTS
   - AO FOR ANALOG OUTPUTS
   - BI FOR BINARY INPUTS
   - BO FOR BINARY OUTPUTS
   - NVO FOR NETWORK VARIABLE OUTPUTS (BOUND TO ANOTHER PIECE OF DDC HARDWARE)
   - NVI FOR NETWORK VARIABLE INPUTS (BOUND FROM ANOTHER PIECE OF DDC HARDWARE)
   - DCC

   IF MORE THAN ONE PIECE OF DDC HARDWARE IS USED TO IMPLEMENT A SEQUENCE AND THE VALUE OF A PHYSICAL INPUT TO ONE IS NEEDED BY THE OTHER, SHOW THE POINT AS BOTH A HARDWARE INPUT (AI OR BI) AND A NETWORK VARIABLE OUTPUT (NVO) ON THE FIRST AND AS A NETWORK VARIABLE INPUT (NVI) TO THE OTHER DDC HARDWARE. SIMILARLY FOR OUTPUTS SHOW A NETWORK VARIABLE OUTPUT (NVO) ON ONE CONTROLLER, AND A NETWORK VARIABLE INPUT (NVI) AND HARDWARE OUTPUT (AO OR BO) ON THE OTHER.

   AN ENTRY OF NVO IS ONLY REQUIRED FOR OUTPUTS THAT ARE USED BY ANOTHER PIECE OF DDC HARDWARE; POINTS THAT HAVE SNVT OUTPUTS ONLY FOR DISPLAY OR TRENDING AT AN LDP OR BY THE M&C SOFTWARE ARE ASSUMED TO BE NVOS AND DO NOT NEED AN NVO ENTRY IN THE I/O COLUMN.

   FOR EVERY ENTRY OF NVO OR NVI SHOW THE SNVT NAME AND TYPE IN THE SNVT NAME AND SNVT TYPE COLUMNS UNDER LDP AND M & C DISPLAY. SEE "SNVT TYPE COLUMN" INSTRUCTIONS BELOW.

6. HOA REQ'D COLUMN: FOR EACH OUTPUT WITH AN "Y" IN THIS COLUMN PROVIDE A HARDWARE MANUAL OVERRIDE FOR THAT OUTPUT:
   A. THE MANUAL OVERRIDE SWITCH FOR BINARY OUTPUTS SHALL PROVIDE FOR OVERRIDING THE OUTPUT OPEN OR CLOSED
   B. THE MANUAL OVERRIDE SWITCH FOR ANALOG OUTPUTS SHALL EITHER:
      - PROVIDE FOR OVERRIDING THE OUTPUT TO 0% OR 100%
      - PROVIDE FOR OVERRIDING THROUGH THE RANGE OF 0% TO 100%.
   C. THE MANUAL OVERRIDE SHALL BE INTEGRATED WITH THE CONTROLLER HARDWARE OR AN EXTERNAL OVERRIDE CO-LOCATED WITH (IN THE SAME ENCLOSURE AS) THE CONTROLLER.

LDP AND M & C DISPLAY & OVERRIDE COLUMNS:

1. LDP VIEW & OVRD COLUMN: PROVIDE AN LDP AND CONFIGURE THE BUILDING CONTROL NETWORK AND THE LDP TO DISPLAY POINTS MARKED WITH A "V". SHOW THE SNVT NAME AND SNVT TYPE FOR EACH POINT SHOWN. (SEE INSTRUCTIONS FOR THE "SNVT TYPE" COLUMN). FOR EACH POINT WITH AN "O" IN THIS COLUMN, PROVIDE A SNVT INPUT FOR THE POINT BY WHICH THE VALUE OF THE POINT CAN BE OVERRIDDEN AND PROVIDE AN LDP (IF NOT ALREADY PROVIDED) AND CONFIGURE THE BUILDING CONTROL NETWORK AND THE LDP TO ALLOW AN OPERATOR TO OVERRIDE (WRITE TO) THE POINT FROM THE LDP. SHOW THE OVERRIDE INPUT SNVT NAME AND TYPE FOR EACH POINT REQUIRING AN OVERRIDE. IF THE OVERRIDE IS RELEASED BY A MEANS OTHER THAN WRITING THE "NULL VALUE" FOR THE SNVT TYPE (AS DEFINED IN THE LONMARK MASTER SNVT LIST), PROVIDE A DESCRIPTION OF HOW THE OVERRIDE IS USED AND RELEASED.

2. M & C VIEW & OVRD COLUMN: A "V" IN THIS COLUMN INDICATES THAT A SNVT FOR THIS POINT MUST BE AVAILABLE FROM THE DDC HARDWARE PERFORMING THE SEQUENCE FOR THIS SYSTEM. PROVIDE A SNVT OUTPUT FOR THESE POINTS AND SHOW THE SNVT NAME AND SNVT TYPE. (SEE INSTRUCTIONS FOR THE "SNVT TYPE" COLUMN). FOR EACH POINT WITH AN "X" IN THIS COLUMN, PROVIDE A SNVT INPUT FOR THE POINT BY WHICH THE VALUE OF THE POINT CAN BE OVERRIDDEN AND SHOW THE SNVT NAME AND TYPE FOR EACH.

3. M & C TREND REQ'D COLUMN: FOR ALL POINTS WITH AN X IN THIS COLUMN A SNVT FOR THIS POINT SHALL BE AVAILABLE. PROVIDE A SNVT OUTPUT FOR THESE POINTS AND SHOW THE SNVT NAME AND SNVT TYPE. (SEE INSTRUCTIONS FOR THE "SNVT TYPE" COLUMN).

4. SNVT TYPE COLUMNS: WHEN A SNVT TYPE IS SHOWN ON THE POINT SCHEDULE CONTRACT DRAWING, USE THE SHOWN SNVT TYPE FOR THE PROVIDED SNVT. IF NECESSARY, A SNVT TYPE TRANSLATOR MAY BE USED TO CONVERT TO THIS SNVT TYPE. IF THE USE OF A TYPE TRANSLATOR RESULTS IN THE SHARING OF A SNVT BETWEEN DDC HARDWARE, DOCUMENT IT ON THE POINTS SCHEDULE AS DESCRIBED IN THE "GENERAL" PORTION OF THESE INSTRUCTIONS. WHERE NO SNVT TYPE IS SHOWN, SHOW THE SNVT TYPE USED.

ALARMS COLUMNS:

1. ALARM CONDITION COLUMN: FOR EACH POINT WITH AN ENTRY IN THIS COLUMN PROVIDE A SNVT OUTPUT FOR THE POINT AND SHOW THE SNVT NAME AND SNVT TYPE IN THE SNVT NAME AND SNVT TYPE COLUMNS UNDER LDP AND M & C DISPLAY. SEE "SNVT TYPE COLUMN" INSTRUCTIONS ABOVE.

OTHER:

1. SYSTEM RESET BUTTON (RST-BUT): IF THE "I/O TYPE" COLUMN CONTAINS "BI", THE SYSTEM SHALL BE CAPABLE OF BEING RESET VIA A LOCAL HARDWARE PUSH-BUTTON.

   IF THERE IS AN "O" IN THE LDP OVRD REQ'D OR M & C OVRD REQ'D COLUMN, THE SYSTEM SHALL ALSO BE CAPABLE OF BEING RESET VIA SNVT INPUT (SEE INSTRUCTIONS FOR M & C OVRD REQ'D AND LDP OVRD REQ'D COLUMNS).

2. SYSTEM OCCUPANCY (SYS-OCC): SHOW OCC, UNOCC, WUCD (WARM-UP/COOL-DOWN) IN THE RANGE COLUMN BASED ON THE SYSTEM-SPECIFIC SEQUENCE OF OPERATIONS AND OCCUPANCY SCHEDULE.

3. MINIMUM OUTSIDE AIR (MINOA) FLOW: FOR SYSTEMS CONTROLLING TO A MINOA SETPOINT, USE THE MINOA-F-SP SHOWN WHEN CONFIGURING THE DDC HARDWARE PERFORMING THE SEQUENCE OF OPERATION. FOR OTHER SYSTEMS SET THE MINIMUM OUTSIDE AIR FLOW TO THE MINIMUM OUTSIDE AIR FLOW SETTING SHOWN AS SPECIFIED.

4. PID LOOP SETTINGS: SHOW ALL PID LOOP SETTINGS IN THE SETTINGS COLUMN, INCLUDING ENGINEERING UNITS FOR EACH SETTING. ADJUST ROW HEIGHT AS NEEDED TO SHOW ALL PID SETTINGS.

5. FILTERS: WHEN FILTER PRESSURES ARE SHOWN, INSTALL FILTER PRESSURE SWITCHES. SHOW LOADED FILTER (HIGH-LIMIT) SETPOINT FOR EACH FILTER.

6. OTHER POINTS: INSTALL SENSORS FOR MONITORING PURPOSES ONLY.

POINT SCHEDULE INSTRUCTIONS FOR UFGS-25 10 10 CONTRACTOR

1. SPACES WHERE NO ENTRY IS ORDINARILY REQUIRED CONTAINS A TILDE: " ~ " (EQUIVALENT TO AN "N/A" OR NULL VALUE).

2. NAME COLUMN: USE THE POINT NAMES SHOWN ON THE POINTS SCHEDULE FOR ALL GRAPHIC DISPLAYS.

3. M & C DISP&OVRD: FOR EACH "V" IN THIS COLUMN CONFIGURE THE GRAPHICAL DISPLAY FOR THIS SYSTEM TO DISPLAY THE VALUE OF THE POINT. UNLESS OTHERWISE SPECIFIED OR APPROVED, USE THE POINT NAME, AS SHOWN IN THE "NAME" COLUMN, TO LABEL THE GRAPHICAL DISPLAY. FOR ALL POINTS WITH AN "O" IN THIS COLUMN USE THE SNVT NAME AND TYPE SHOWN TO PROVIDE OVERRIDE CAPABILITY. CONFIGURE THE M & C SYSTEM DISPLAYS TO ALLOW AN OPERATOR TO OVERRIDE (AND RELEASE THE OVERRIDE) THESE POINTS AS SPECIFIED.

4. M & C TREND REQ'D COLUMN: FOR ALL POINTS WITH AN "Y" IN THIS COLUMN, SET UP A TREND AT THE M & C SOFTWARE AS SPECIFIED.

5. ALARM CONDITION COLUMN: FOR EACH POINT WITH AN ENTRY IN THIS COLUMN USE THE ALARM LIMITS SHOWN TO CONFIGURE ALARM GENERATION FOR THE POINT AT THE M&C SOFTWARE.

6. ALARM PRIORITY COLUMN: WHEN CONFIGURING THE ALARM HANDLING AT THE M&C SOFTWARE, USE THE ALARM PRIORITY SHOWN TO DETERMINE IF THE ALARM IS CRITICAL (CRIT) OR INFORMATIONAL (INFO).

7. M&C ROUTING NAME COLUMN: CONFIGURE ALARM HANDLING AT THE M&C SERVER ACCORDING TO THE ALARM ROUTING SHOWN ON THE POINTS SCHEDULE, THE ALARM ROUTING SCHEDULES AND AS SPECIFIED.

8. SYSTEM RESET BUTTON (RST-BUT): IF THERE IS AN "O" IN M & C VIEW & OVRD OVRD COLUMN, CONFIGURE M & C SOFTWARE GRAPHIC DISPLAYS TO PROVIDE SYSTEM RESET CAPABILITY.

DRAFT

US Army Corps of Engineers
Japan District ®

FOR REVIEW ONLY
THESE DOCUMENTS ARE FOR CONCEPT DESIGN AND NOT INTENDED FOR CONSTRUCTION, BIDDING OR PERMIT PURPOSES. THEY WERE PREPARED BY, OR UNDER SUPERVISION OF:
BRIAN C. ALLERHEILIGEN
NAME
93876 — REGISTRATION #
09/04/2025 — DATE
TEXAS REGISTERED ENGINEERING FIRM F-2966

MARK	DESCRIPTION	DATE

DESIGNED BY: K. WILKINS
DRAWN BY: C. HUFFMAN
CHECKED BY: B. SCHNEIDER
SUBMITTED BY: A. GUERRA
SIZE: ISO A1
ISSUE DATE: 09/04/2025
SOLICITATION NO.:
CONTRACT NO.:
DRAWING CODE:
FILE NAME: M-809

US ARMY CORPS OF ENGINEERS
JAPAN ENGINEER DISTRICT
OKINAWA, JAPAN

Jacobs
JACOBS GOVERNMENT SERVICES COMPANY
777 MAIN STREET / FORT WORTH, TX 76102 USA

FY25 REPAIR HVAC WIDEBAND SATCOM OPS B100
CAMP BUCKNER COMMUNICATIONS ANNEX
OKINAWA, JAPAN
PROJECT NUMBER:D3449305

POINT LIST INSTRUCTIONS

SHEET ID
M-809

FILE PATH: C:\Users\MOHAPPC\Documents\D3449305-M-3D_MOHAPPC.rvt
PLOT DATE: 8/29/2025 3:11:02 PM PLOTTED BY: PLOT SCALE: 1 : 1

CHILLED WATER SYSTEM
NODE: <DDC##>
NODE LOCATION: <____>
NODE ADDRESS DOMAIN = <____>, SUBNET = <____>, NODE = <____>
NODE ID: <____>

FUNCTION	POINT ID	DESCRIPTION	DDC HARDWARE ID	SETTING (WITH UNITS)	RANGE (WITH UNITS)	IO TYPE	HOA REQ'D	CONFIG. TYPE	M&C VIEW AND OVRD	LDP VIEW AND OVRD	TREND REQ'D	ALARMING			PRIMARY POINT INFORMATION		NETWORK DATA EXCHANGE		OVERRIDES	ALARM INFORMATION		CONFIGURATION INFORMATION
												ALARM CONDITION (SEE NOTES)	ALARM PRIORITY	M&C ROUTING	OBJECT TYPE AND INSTANCE NUMBER (AND PROPERTY ID)	NIAGARA ID	DATA FROM	DATA TO	OBJECT TYPE & INSTANCE NUMBER OR COMMANDABLE	ALARM TYPE (PROVIDE DDC ID FOR REMOTE IN)	NOTIFCATION CLASS OBJECT INSTANCE NUMBER	
PROOFS & SAFETIES	CLG1-FS	MINIMUM CHW FLOW SWITCH	<___>	RE: A1/M-802	ALM/NORMAL	BI	~	~	V	V	Y	ALM	CRIT	[___]								
	CLG2-FS	MINIMUM CHW FLOW SWITCH	<___>	RE: A1/M-802	ALM/NORMAL	BI	~	~	V	V	Y	ALM	CRIT	[___]								
	CWP1-FAULT	CHW PUMP 1 FAULT	<___>	~	ALM/NORMAL	BI	~	~	V	V	~	ALM	INFO	[___]								
	CWP1-S	CHW PUMP 1 STATUS	<___>	~	ON/OFF	BI	~	~	V	V	~	RE: A1/M-802	INFO	[___]								
	CWP2-FAULT	CHW PUMP 2 FAULT	<___>	~	ALM/NORMAL	BI	~	~	V	V	~	ALM	INFO	[___]								
	CWP2-S	CHW PUMP 2 STATUS	<___>	~	ON/OFF	BI	~	~	V	V	~	RE: A1/M-802	INFO	[___]								
	CH1-S	CHILLER 1 STATUS	<___>	~	ON/OFF	BI	~	~	V	V	Y	~	~	~								
	CH2-S	CHILLER 2 STATUS	<___>	~	ON/OFF	BI	~	~	V	V	Y	~	~	~								
	CU1-S	CONDENSER 1 STATUS	<___>	~	ON/OFF	BI	~	~	V	V	Y	~	~	~								
	CU2-S	CONDENSER 2 STATUS	<___>	~	ON/OFF	BI	~	~	V	V	Y	~	~	~								
	CHW-BP-S	MIN FLOW BYPASS VALVE STATUS	<___>	~	0-100%	AI	~	~	V	V	~	MISMATCH COMMAND VS POSITION	CRIT	[___]								
	CLG1-V-S	CH-1 CHW ISOLATION VALVE STATUS	<___>	~	0-100%	AI	~	~	V	V	~	MISMATCH COMMAND VS POSITION	CRIT	[___]								
	CLG2-V-S	CH-2 CHW ISOLATION VALVE STATUS	<___>	~	0-100%	AI	~	~	V	V	~	MISMATCH COMMAND VS POSITION	CRIT	[___]								
START/STOP	CH1-ENA	CHILLER 1 ENABLE	<___>	~	ON/OFF	BO	Y	~	VO	V	Y	~	~	~								
	CH2-ENA	CHILLER 2 ENABLE	<___>	~	ON/OFF	BO	Y	~	VO	V	Y	~	~	~								
	CU1-ENA	CONDENSER 1 ENABLE	<___>	~	ON/OFF	BO	Y	~	VO	V	Y	~	~	~								
	CU2-ENA	CONDENSER 2 ENABLE	<___>	~	ON/OFF	BO	Y	~	VO	V	Y	~	~	~								
	CWP1-SS	PUMP 1 START/STOP	<___>	~	ON/OFF	BO	Y	~	VO	V	Y	~	~	~								
	CWP2-SS	PUMP 2 START/STOP	<___>	~	ON/OFF	BO	~	~	VO	V	Y	~	~	~								
CHW TEMP CONTROL	CHWR-T	CHW RETURN TEMPERATURE	<____>	~	RE: A1/M-802	AI	~	~	V	V	Y	RE: A1/M-802	INFO	<____>								
	CHWS-T	CHW SUPPLYTEMPERATURE	<____>	~	RE: A1/M-802	AI	~	~	V	V	Y	RE: A1/M-802	INFO	<____>								
PUMP CONTROL	CWP1-SPD-C	PUMP 1 SPEED	<___>	~	0-100%	AO	~	~	V	V	Y	~	~	~								
	CWP2-SPD-C	PUMP 2 SPEED	<___>	~	0-100%	AO	~	~	V	V	Y	~	~	~								
	CHW-SYS-DP	SYS. DIFF PRESSURE SENSOR	<___>	~	RE:A1/M-802	AO	~	~	V	V	Y	~	~	~								
	CHWS-F	CHILLED WATER FLOW	<___>	~	RE:A1/M-802	AO	~	~	V	V	Y	~	~	~								
	CLG1-V-C	CH-1 CHW ISOLATION VALVE COMMAND	<___>	~	OPEN/CLOSE	BO	~	~	VO	V	Y	~	~	~								
	CLG2-V-C	CH-2 CHW ISOLATION VALVE COMMAND	<___>	~	OPEN/CLOSE	BO	~	~	VO	V	Y	~	~	~								
OTHER POINTS	CH1-DL	CHILLER 1 DATA LINK	<___>	~	~	NVI	~	~	V	~	~	~	~	~								
	CH2-DL	CHILLER 2 DATA LINK	<___>	~	~	NVI	~	~	V	~	~	~	~	~								
	CU1-DL	CONDENSER 1 DATA LINK	<___>	~	~	NVI	~	~	V	~	~	~	~	~								
	CU2-DL	CONDENSER 2 DATA LINK	<___>	~	~	NVI	~	~	V	~	~	~	~	~								

NOTES:
1. THE CONTRACTOR MUST COMPLETE THE POINTS SCHEDULE AS INDICATED IN THE SPECIFICATION AND IN ACCORDANCE WITH THE POINTS SCHEDULE INSTRUCTIONS DRAWING.
2. UNIT MANUFACTURERS PROOFS AND SAFETIES: THE CONTRACTOR MUST SHOW EACH PROOF AND SAFETY AS A SEPARATE ROW.
3. UNIT STATUS: SERVES AS A MONITORED POINT AT THE M&C SOFTWARE (FRONT-END) AND AS A HEATING/COOLING REQUEST TO THE BOILER, HEAT EXCHANGER, AND/OR CHILLER SERVING THIS SYSTEM (IF APPLICABLE)

DRAFT

US Army Corps of Engineers
Japan District ®

FOR REVIEW ONLY
THESE DOCUMENTS ARE FOR CONCEPT DESIGN AND NOT INTENDED FOR CONSTRUCTION, BIDDING OR PERMIT PURPOSES. THEY WERE PREPARED BY, OR UNDER SUPERVISION OF:
BRIAN C. ALLERHEILIGEN
NAME
93876 REGISTRATION # 09/04/2025 DATE
TEXAS REGISTERED ENGINEERING FIRM F-2966

MARK	DESCRIPTION	DATE

ISSUE DATE: 09/04/2025
SOLICITATION NO.:
CONTRACT NO.:
DRAWING CODE:
DESIGNED BY: K. WILKINS
DRAWN BY: C. WATERS
CHECKED BY: B. SCHNEIDER
SUBMITTED BY: A. GUERRA
SIZE: ISO A1
FILE NAME: M-810

US ARMY CORPS OF ENGINEERS
JAPAN ENGINEER DISTRICT
OKINAWA, JAPAN
Jacobs
JACOBS GOVERNMENT SERVICES COMPANY
777 MAIN STREET | FORT WORTH, TX 76102
USA
JEC Standard

FY25 REPAIR HVAC WIDEBAND SATCOM OPS B100
CAMP BUCKNER COMMUNICATIONS ANNEX
OKINAWA, JAPAN
PROJECT NUMBER:D3449305

I/O POINTS LIST

SHEET ID
M-810

DEDICATED OUTDOOR AIR SYSTEM (DOAS-1)
NODE: <DDC##>
NODE LOCATION: <____>
NODE ADDRESS DOMAIN = <____>, SUBNET = <____>, NODE = <____>
NODE ID: <____>

FUNCTION	POINT ID	DESCRIPTION	DDC HARDWARE ID	SETTING (WITH UNITS)	RANGE (WITH UNITS)	IO TYPE	HOA REQ'D	CONFIG. TYPE	M&C VIEW AND OVRD	LDP VIEW AND OVRD	TREND REQ'D	ALARMING			PRIMARY POINT INFORMATION		NETWORK DATA EXCHANGE		OVERRIDES	ALARM INFORMATION		CONFIGURATION INFORMATION
												ALARM CONDITION (SEE NOTES)	ALARM PRIORITY	M&C ROUTING	OBJECT TYPE AND INSTANCE NUMBER (AND PROPERTY ID)	NIAGARA ID	DATA FROM	DATA TO	OBJECT TYPE & INSTANCE NUMBER OR COMMANDABLE	ALARM TYPE (PROVIDE DDC ID FOR REMOTE IN)	NOTIFCATION CLASS OBJECT INSTANCE NUMBER	
PROOFS & SAFETIES	SF-S	SF VFD STATUS	<____>	~	ON/OFF	BI	~	~	V	V	Y	MISMATCH COMMAND VS STATUS	INFO	<____>								
	SF-FAULT	SF FAULT	<____>	~	ALM/NORMAL	BI	~	~	V	V	Y	SF VFD FAULT	INFO	<____>								
	FLT-P	OUTSIDE AIR FILTER STATUS	<____>	~	<0-249> PA.	AI	~	H	V	V	Y	DIRTY FILTER	INFO	<____>								
START/STOP	SF-SS	SF START/STOP	<____>	~	ON/OFF	BO	~	~	VO	V	Y	~	~	~								
FAN CONTROL	SF-SPD-C	SF SPEED	<____>	~	0-100%	AI	~	~	V	V	Y	RE: B6/M-803	INFO	<____>								
	SA-P	SA PRESSURE SENSOR	<____>	~	RE: B6/M-803	AI	~	~	V	V	Y	RE: B6/M-803	INFO	<____>								
FLOW MEASURING STATION	OA-FMS	OA FLOW MEASURING STATION	<____>	~	0 L/S - 9,439 L/S	AI	~	~	V	V	Y	RE: B6/M-803	INFO	<____>								
TEMPERATURE CONTORL	SA-T	SA TEMPERATURE SENSOR	<____>	~	4-35°C	AI	~	~	V	V	Y	RE: B6/M-803	INFO	<____>								
	OA-T	OA TEMPERATURE SENSOR	<____>	~	-18-49°C	AI	~	~	V	V	Y	RE: B6/M-803	INFO	<____>								
	CC-T	CC TEMPERATURE SENSOR	<____>	~	4-35°C	AI	~	~	V	V	Y	RE: B6/M-803	INFO	<____>								
	CC-V-C	CC VALVE CONTROL	<____>	~	0-100%	AO	~	~	V	V	Y	MISMATCH COMMAND VS POSITION	INFO	<____>								
	ELEC-ENA	ELECTRIC HEATING COIL CONTROL	<____>	~	0-100%	AO	~	~	V	V	Y	MISMATCH COMMAND VS POSITION	INFO	<____>								
OTHER POINTS	OA-D-2P	OUTSIDE AIR DAMPER COMMAND	<____>	~	OPEN/CLOSE	AO	~	~	V	~	~	MISMATCH COMMAND VS POSITION	~	~								

NOTES:
1. THE CONTRACTOR MUST COMPLETE THE POINTS SCHEDULE AS INDICATED IN THE SPECIFICATION AND IN ACCORDANCE WITH THE POINTS SCHEDULE INSTRUCTIONS DRAWING.
2. UNIT MANUFACTURERS PROOFS AND SAFETIES: THE CONTRACTOR MUST SHOW EACH PROOF AND SAFETY AS A SEPARATE ROW.
3. UNIT STATUS: SERVES AS A MONITORED POINT AT THE M&C SOFTWARE (FRONT-END) AND AS A HEATING/COOLING REQUEST TO THE BOILER, HEAT EXCHANGER, AND/OR CHILLER SERVING THIS SYSTEM (IF APPLICABLE)

DEDICATED OUTDOOR AIR SYSTEM (DOAS-2)
NODE: <DDC##>
NODE LOCATION: <____>
NODE ADDRESS DOMAIN = <____>, SUBNET = <____>, NODE = <____>
NODE ID: <____>

FUNCTION	POINT ID	DESCRIPTION	DDC HARDWARE ID	SETTING (WITH UNITS)	RANGE (WITH UNITS)	IO TYPE	HOA REQ'D	CONFIG. TYPE	M&C VIEW AND OVRD	LDP VIEW AND OVRD	TREND REQ'D	ALARMING			PRIMARY POINT INFORMATION		NETWORK DATA EXCHANGE		OVERRIDES	ALARM INFORMATION		CONFIGURATION INFORMATION
												ALARM CONDITION (SEE NOTES)	ALARM PRIORITY	M&C ROUTING	OBJECT TYPE AND INSTANCE NUMBER (AND PROPERTY ID)	NIAGARA ID	DATA FROM	DATA TO	OBJECT TYPE & INSTANCE NUMBER OR COMMANDABLE	ALARM TYPE (PROVIDE DDC ID FOR REMOTE IN)	NOTIFCATION CLASS OBJECT INSTANCE NUMBER	
PROOFS & SAFETIES	SF-S	SF STATUS	<____>	~	ON/OFF	BI	~	~	V	V	Y	MISMATCH COMMAND VS STATUS	INFO	<____>								
	CU-S	CONDENSING UNIT STATUS	<____>	~	ON/OFF	BI	~	~	V	V	Y	MISMATCH COMMAND VS STATUS	INFO	<____>								
	SF-FAULT	SF FAULT	<____>	~	ALM/NORMAL	BI	~	~	V	V	Y	SF VFD FAULT	INFO	<____>								
	FLT-P	OUTSIDE AIR FILTER STATUS	<____>	~	<0-249> PA.	AI	~	H	V	V	Y	DIRTY FILTER	INFO	<____>								
START/STOP	SF-SS	SF START/STOP	<____>	~	ON/OFF	BO	~	~	VO	V	Y	~	~	~								
	CU-SS	CONDENSING UNIT START/STOP	<____>	~	ON/OFF	BO	~	~	VO	V	Y	~	~	~								
FAN CONTROL	SA-P	SA PRESSURE SENSOR	<____>	~	RE: B1/M-802	AI	~	~	V	V	Y	RE: B1/M-802	INFO	<____>								
FLOW MEASURING STATION	OA-FMS	OA FLOW MEASURING STATION	<____>	~	0 L/S - 9,439 L/S	AI	~	~	V	V	Y	RE: B1/M-803	INFO	<____>								
TEMPERATURE CONTORL	SA-T	SA TEMPERATURE SENSOR	<____>	~	4-35°C	AI	~	~	V	V	Y	RE: B1/M-803	INFO	<____>								
	OA-T	OA TEMPERATURE SENSOR	<____>	~	-18-49°C	AI	~	~	V	V	Y	RE: B1/M-803	INFO	<____>								
	CC-T	CC TEMPERATURE SENSOR	<____>	~	4-35°C	AI	~	~	V	V	Y	RE: B1/M-803	INFO	<____>								
	ELEC-ENA	ELECTRIC HEATING COIL CONTROL	<____>	~	0-100%	AO	~	~	V	V	Y	MISMATCH COMMAND VS POSITION	INFO	<____>								
OTHER POINTS	OA-D-2P	OUTSIDE AIR DAMPER COMMAND	<____>	~	OPEN/CLOSE	AO	~	~	V	~	~	MISMATCH COMMAND VS POSITION	~	~								

NOTES:
1. THE CONTRACTOR MUST COMPLETE THE POINTS SCHEDULE AS INDICATED IN THE SPECIFICATION AND IN ACCORDANCE WITH THE POINTS SCHEDULE INSTRUCTIONS DRAWING.
2. UNIT MANUFACTURERS PROOFS AND SAFETIES: THE CONTRACTOR MUST SHOW EACH PROOF AND SAFETY AS A SEPARATE ROW.
3. UNIT STATUS: SERVES AS A MONITORED POINT AT THE M&C SOFTWARE (FRONT-END) AND AS A HEATING/COOLING REQUEST TO THE BOILER, HEAT EXCHANGER, AND/OR CHILLER SERVING THIS SYSTEM (IF APPLICABLE)

DRAFT

US Army Corps of Engineers
Japan District ®

FOR REVIEW ONLY
THESE DOCUMENTS ARE FOR CONCEPT DESIGN AND NOT INTENDED FOR CONSTRUCTION BIDDING OR PERMIT PURPOSES. THEY WERE PREPARED BY, OR UNDER SUPERVISION OF:
BRIAN C. ALLERHEILIGEN
NAME
93876 REGISTRATION # 09/04/2025 DATE
TEXAS REGISTERED ENGINEERING FIRM F-2966

MARK	DESCRIPTION	DATE

ISSUE DATE: 09/04/2025
SOLICITATION NO.:
CONTRACT NO.:
DRAWING CODE:
DESIGNED BY: K. WILKINS
DRAWN BY: C. HAYNES
CHECKED BY: B. SCHNEIDER
SUBMITTED BY: A. GUERRA
SIZE: ISO A1
FILE NAME: M-811

US ARMY CORPS OF ENGINEERS
JAPAN ENGINEER DISTRICT
OKINAWA, JAPAN
Jacobs
JACOBS GOVERNMENT SERVICES COMPANY
777 MAIN STREET / FORT WORTH, TX 76102 USA

FY25 REPAIR HVAC WIDEBAND SATCOM OPS B100
CAMP BUCKNER COMMUNICATIONS ANNEX
OKINAWA, JAPAN
PROJECT NUMBER:D3449305

I/O POINTS LIST

SHEET ID
M-811

M M-811-

FILE PATH: C:\Users\MOHAPPC\Documents\D3449305-M-3D_MOHAPPC.rvt
PLOT DATE: 8/29/2025 3:11:02 PM PLOTTED BY: PLOT SCALE:

BACKCHECK SUBMITTAL DESIGN

AIR HANDLING UNIT (AHU-1)
NODE: <DDC##>
NODE LOCATION: <____>
NODE ADDRESS DOMAIN = <____>, SUBNET = <____>, NODE = <____>
NODE ID: <____>

FUNCTION	POINT ID	DESCRIPTION	DDC HARDWARE ID	SETTING (WITH UNITS)	RANGE (WITH UNITS)	IO TYPE	HOA REQ'D	CONFIG. TYPE	M&C VIEW AND OVRD	LDP VIEW AND OVRD	TREND REQ'D	ALARMING			PRIMARY POINT INFORMATION		NETWORK DATA EXCHANGE		OVERRIDES	ALARM INFORMATION		CONFIGURATION INFORMATION
												ALARM CONDITION (SEE NOTES)	ALARM PRIORITY	M&C ROUTING	OBJECT TYPE AND INSTANCE NUMBER (AND PROPERTY ID)	NIAGARA ID	DATA FROM	DATA TO	OBJECT TYPE & INSTANCE NUMBER OR COMMANDABLE	ALARM TYPE (PROVIDE DDC ID FOR REMOTE IN)	NOTIFCATION CLASS OBJECT INSTANCE NUMBER	
PROOFS & SAFETIES	SF-S	SF VFD STATUS	<____>	~	ON/OFF	BI	~	~	V	V	Y	MISMATCH COMMAND VS STATUS	INFO	<____>								
	SF-FAULT	SF FAULT	<____>	~	ALM/NORMAL	BI	~	~	V	V	Y	SF VFD FAULT	INFO	<____>								
	SA-SMK	SMOKE DETECTOR STATUS	<____>	~	ALM/NORMAL	BI	~	~	V	V	Y	MISMATCH COMMAND VS STATUS	INFO	<____>								
	FLT-P	FILTER STATUS	<____>	~	<0-249> PA.	AI	~	H	V	V	Y	DIRTY FILTER	INFO	<____>								
	SA-P-HL	SA PRESSURE SWITCH	<____>	~	747 PA.	BI	~	H	V	V	Y	HIGH PRESSURE	INFO	<____>								
START/STOP	SF-SS	SF START/STOP	<____>	~	ON/OFF	BO	~	~	VO	V	Y	~	~	~								
FAN CONTROL	SF-SPD-C	SF SPEED	<____>	~	0-100%	AI	~	~	V	V	Y	RE: A1/M-804	INFO	<____>								
	SA-P	SA PRESSURE SENSOR	<____>	~	RE: A1/M-804	AI	~	~	V	V	Y	RE: A1/M-804	INFO	<____>								
FLOW MEASURING STATION	SA-FMS	SA FLOW MEASURING STATION	<____>	~	0 L/S - 9,439 L/S	AI	~	~	V	V	Y	RE: A1/M-804	INFO	<____>								
TEMPERATURE CONTORL	SA-T	SA TEMPERATURE SENSOR	<____>	~	4-35°C	AI	~	~	V	V	Y	RE: A1/M-804	INFO	<____>								
	RA-T	RA TEMPERATURE SENSOR	<____>	~	4-35°C	AI	~	~	V	V	Y	RE: A1/M-804	INFO	<____>								
	ELEC-ENA	ELECTRIC HEATING COIL CONTROL	<____>	~	0-100%	AO	~	~	V	V	Y	MISMATCH COMMAND VS POSITION	INFO	<____>								
	CLG-V-C	COOLING VALVE CONTROL	<____>	~	0-100%	AO	~	~	V	V	Y	MISMATCH COMMAND VS POSITION	INFO	<____>								
OTHER POINTS	OA-D-2P	OUTSIDE AIR DAMPER COMMAND	<____>	~	OPEN/CLOSE	AO	~	~	V	~	~	MISMATCH COMMAND VS POSITION	~	~								
	RA-D-2P	RETURN AIR DAMPER COMMAND	<____>	~	OPEN/CLOSE	AO	~	~	V	~	~	MISMATCH COMMAND VS POSITION	~	~								

NOTES:
1. THE CONTRACTOR MUST COMPLETE THE POINTS SCHEDULE AS INDICATED IN THE SPECIFICATION AND IN ACCORDANCE WITH THE POINTS SCHEDULE INSTRUCTIONS DRAWING.
2. UNIT MANUFACTURERS PROOFS AND SAFETIES: THE CONTRACTOR MUST SHOW EACH PROOF AND SAFETY AS A SEPARATE ROW.
3. UNIT STATUS: SERVES AS A MONITORED POINT AT THE M&C SOFTWARE (FRONT-END) AND AS A HEATING/COOLING REQUEST TO THE BOILER, HEAT EXCHANGER, AND/OR CHILLER SERVING THIS SYSTEM (IF APPLICABLE)

VAV UNITS
NODE: <DDC##>
NODE LOCATION: <____>
NODE ADDRESS DOMAIN = <____>, SUBNET = <____>, NODE = <____>
NODE ID: <____>

FUNCTION	POINT ID	DESCRIPTION	DDC HARDWARE ID	SETTING (WITH UNITS)	RANGE (WITH UNITS)	IO TYPE	HOA REQ'D	CONFIG. TYPE	M&C VIEW AND OVRD	LDP VIEW AND OVRD	TREND REQ'D	ALARMING			PRIMARY POINT INFORMATION		NETWORK DATA EXCHANGE		OVERRIDES	ALARM INFORMATION		CONFIGURATION INFORMATION
												ALARM CONDITION (SEE NOTES)	ALARM PRIORITY	M&C ROUTING	OBJECT TYPE AND INSTANCE NUMBER (AND PROPERTY ID)	NIAGARA ID	DATA FROM	DATA TO	OBJECT TYPE & INSTANCE NUMBER OR COMMANDABLE	ALARM TYPE (PROVIDE DDC ID FOR REMOTE IN)	NOTIFCATION CLASS OBJECT INSTANCE NUMBER	
FLOW MEASURING	PSA-F	PRIMARY SUPPLY AIR FLOW	<____>	~	RE: SCHED M-602	AI	~	~	V	V	Y	~	INFO	<____>								
TEMPERATURE CONTORL	SA-T	SA TEMPERATURE SENSOR	<____>	~	4-35°C	AI	~	~	V	V	Y	~	INFO	<____>								
	ZN-T	ZN TEMPERATURE SENSOR	<____>	~	4-35°C	AI	~	~	V	V	Y	~	INFO	<____>								
	PSA-D-C	PRIMARY SUPPLY AIR DAMPER COMMAND	<____>	~	0-100%	AO	~	~	V	V	Y	~	INFO	<____>								

NOTES:
1. THE CONTRACTOR MUST COMPLETE THE POINTS SCHEDULE AS INDICATED IN THE SPECIFICATION AND IN ACCORDANCE WITH THE POINTS SCHEDULE INSTRUCTIONS DRAWING.
2. UNIT MANUFACTURERS PROOFS AND SAFETIES: THE CONTRACTOR MUST SHOW EACH PROOF AND SAFETY AS A SEPARATE ROW.
3. UNIT STATUS: SERVES AS A MONITORED POINT AT THE M&C SOFTWARE (FRONT-END) AND AS A HEATING/COOLING REQUEST TO THE BOILER, HEAT EXCHANGER, AND/OR CHILLER SERVING THIS SYSTEM (IF APPLICABLE)

DRAFT

US Army Corps of Engineers
Japan District ®

FOR REVIEW ONLY
THESE DOCUMENTS ARE FOR CONCEPT DESIGN AND NOT INTENDED FOR CONSTRUCTION BIDDING OR PERMIT PURPOSES. THEY WERE PREPARED BY, OR UNDER SUPERVISION OF:
BRIAN C. ALLERHEILIGEN
NAME
93876 REGISTRATION # 09/04/2025 DATE
TEXAS REGISTERED ENGINEERING FIRM F-2966

MARK	DESCRIPTION	DATE

DESIGNED BY: K. WILKINS
DRAWN BY: C. MATTHEWS
CHECKED BY: B. SCHNEIDER
SUBMITTED BY: A. GUERRA
SIZE: ISO A1
ISSUE DATE: 09/04/2025
SOLICITATION NO.:
CONTRACT NO.:
DRAWING CODE:
FILE NAME: M-812

US ARMY CORPS OF ENGINEERS
JAPAN ENGINEER DISTRICT
OKINAWA, JAPAN

Jacobs
JACOBS GOVERNMENT SERVICES COMPANY
777 MAIN STREET, SUITE 1000 FORT WORTH, TX 76102 USA

FY25 REPAIR HVAC WIDEBAND SATCOM OPS B100
CAMP BUCKNER COMMUNICATIONS ANNEX
OKINAWA, JAPAN
PROJECT NUMBER:D3449305

I/O POINTS LIST

SHEET ID
M-812

FILE PATH: C:\Users\MOHAPPC\Documents\D3449305-M-3D_MOHAPPC.rvt
PLOT DATE: 8/29/2025 3:11:03 PM PLOTTED BY: PLOT SCALE:

AIR HANDLING UNIT (AHU-2)
NODE: <DDC##>
NODE LOCATION: <____>
NODE ADDRESS DOMAIN = <____>, SUBNET = <____>, NODE = <____>
NODE ID: <____>

FUNCTION	POINT ID	DESCRIPTION	DDC HARDWARE ID	SETTING (WITH UNITS)	RANGE (WITH UNITS)	IO TYPE	HOA REQ'D	CONFIG. TYPE	M&C VIEW AND OVRD	LDP VIEW AND OVRD	TREND REQ'D	ALARMING			PRIMARY POINT INFORMATION		NETWORK DATA EXCHANGE		OVERRIDES	ALARM INFORMATION		CONFIGURATION INFORMATION
												ALARM CONDITION (SEE NOTES)	ALARM PRIORITY	M&C ROUTING	OBJECT TYPE AND INSTANCE NUMBER (AND PROPERTY ID)	NIAGARA ID	DATA FROM	DATA TO	OBJECT TYPE & INSTANCE NUMBER OR COMMANDABLE	ALARM TYPE (PROVIDE DDC ID FOR REMOTE IN)	NOTIFCATION CLASS OBJECT INSTANCE NUMBER	
PROOFS & SAFETIES	SF-S	SF STATUS	<____>	~	ON/OFF	BI	~	~	V	V	Y	MISMATCH COMMAND VS STATUS	INFO	<____>								
	CU-S	CONDENSING UNIT STATUS	<____>	~	ON/OFF	BI	~	~	V	V	Y	MISMATCH COMMAND VS STATUS	INFO	<____>								
	SF-FAULT	SF FAULT	<____>	~	ALM/NORMAL	BI	~	~	V	V	Y	SF VFD FAULT	INFO	<____>								
	SA-SMK	SMOKE DETECTOR STATUS	<____>	~	ALM/NORMAL	BI	~	~	V	V	Y	MISMATCH COMMAND VS STATUS	INFO	<____>								
	FLT-P	FILTER STATUS	<____>	~	<0-249> PA.	AI	~	H	V	V	Y	DIRTY FILTER	INFO	<____>								
	SA-P-HL	SA PRESSURE SWITCH	<____>	~	747 PA.	BI	~	H	V	V	Y	HIGH PRESSURE	INFO	<____>								
START/STOP	SF-SS	SF START/STOP	<____>	~	ON/OFF	BO	~	~	VO	V	Y	~	~	~								
	CU-SS	SF START/STOP	<____>	~	ON/OFF	BO	~	~	VO	V	Y	~	~	~								
FLOW MEASURING STATION	SA-FMS	SA FLOW MEASURING STATION	<____>	~	0 L/S - 9,439 L/S	AI	~	~	V	V	Y	RE: C1/M-805	INFO	<____>								
TEMPERATURE CONTORL	SA-T	SA TEMPERATURE SENSOR	<____>	~	4-35°C	AI	~	~	V	V	Y	RE: C1/M-805	INFO	<____>								
	RA-T	RA TEMPERATURE SENSOR	<____>	~	4-35°C	AI	~	~	V	V	Y	RE: C1/M-805	INFO	<____>								
	ELEC-ENA	ELECTRIC HEATING COIL CONTROL	<____>	~	0-100%	AO	~	~	V	V	Y	MISMATCH COMMAND VS POSITION	INFO	<____>								
	CU-STP	CONDENSING UNIT SETPOINT	<____>	~	0-100%	AO	~	~	V	V	Y	MISMATCH COMMAND VS POSITION	INFO	<____>								
OTHER POINTS	OA-D-2P	OUTSIDE AIR DAMPER COMMAND	<____>	~	OPEN/CLOSE	AO	~	~	V	~	~	MISMATCH COMMAND VS POSITION	~	~								
	RA-D-2P	RETURN AIR DAMPER COMMAND	<____>	~	OPEN/CLOSE	AO	~	~	V	~	~	MISMATCH COMMAND VS POSITION	~	~								
	SA-P	SA PRESSURE SENSOR	<____>	~	RE: B1/M-805	AI	~	~	V	V	Y	RE: B1/M-805	INFO	<____>								

NOTES:
1. THE CONTRACTOR MUST COMPLETE THE POINTS SCHEDULE AS INDICATED IN THE SPECIFICATION AND IN ACCORDANCE WITH THE POINTS SCHEDULE INSTRUCTIONS DRAWING.
2. UNIT MANUFACTURERS PROOFS AND SAFETIES: THE CONTRACTOR MUST SHOW EACH PROOF AND SAFETY AS A SEPARATE ROW.
3. UNIT STATUS: SERVES AS A MONITORED POINT AT THE M&C SOFTWARE (FRONT-END) AND AS A HEATING/COOLING REQUEST TO THE BOILER, HEAT EXCHANGER, AND/OR CHILLER SERVING THIS SYSTEM (IF APPLICABLE)

AIR HANDLING UNIT (AHU- 3)
NODE: <DDC##>
NODE LOCATION: <____>
NODE ADDRESS DOMAIN = <____>, SUBNET = <____>, NODE = <____>
NODE ID: <____>

FUNCTION	POINT ID	DESCRIPTION	DDC HARDWARE ID	SETTING (WITH UNITS)	RANGE (WITH UNITS)	IO TYPE	HOA REQ'D	CONFIG. TYPE	M&C VIEW AND OVRD	LDP VIEW AND OVRD	TREND REQ'D	ALARMING			PRIMARY POINT INFORMATION		NETWORK DATA EXCHANGE		OVERRIDES	ALARM INFORMATION		CONFIGURATION INFORMATION
												ALARM CONDITION (SEE NOTES)	ALARM PRIORITY	M&C ROUTING	OBJECT TYPE AND INSTANCE NUMBER (AND PROPERTY ID)	NIAGARA ID	DATA FROM	DATA TO	OBJECT TYPE & INSTANCE NUMBER OR COMMANDABLE	ALARM TYPE (PROVIDE DDC ID FOR REMOTE IN)	NOTIFCATION CLASS OBJECT INSTANCE NUMBER	
PROOFS & SAFETIES	RA-FLT-P	FILTER STATUS	<____>	~	<0-249> PA.	AI	~	H	V	V	Y	DIRTY FILTER	INFO	<____>								
	SF-S	SF STATUS	<____>	~	ON/OFF	BI	~	~	VO	V	Y	MISMATCH COMMAND VS STATUS	~	~								
START STOP	SF-SS	START/STOP	<____>	~	ON/OFF	BO	~	~	VO	V	Y	~	~	~								
TEMPERATURE CONTORL	CLG-V-C	COOLING VALVE CONTROL	<____>	~	0-100%	AO	~	~	V	V	Y	MISMATCH COMMAND VS POSITION	INFO	<____>								
	CLG-V-P	COOLING VALVE POSITION	<____>	~	0-100%	AI	~	~	V	V	Y	MISMATCH COMMAND VS POSITION	INFO	<____>								
	ELEC	ELECTRIC COIL CONTROL	<____>	~	0-100%	AI	~	~	V	V	Y	MISMATCH COMMAND VS POSITION	INFO	<____>								
	ZN-T	ZONE TEMPERATURE SENSOR	<____>	~	4-35°C	AI	~	~	V	V	Y	~	INFO	<____>								

NOTES:
1. THE CONTRACTOR MUST COMPLETE THE POINTS SCHEDULE AS INDICATED IN THE SPECIFICATION AND IN ACCORDANCE WITH THE POINTS SCHEDULE INSTRUCTIONS DRAWING.
2. UNIT MANUFACTURERS PROOFS AND SAFETIES: THE CONTRACTOR MUST SHOW EACH PROOF AND SAFETY AS A SEPARATE ROW.
3. UNIT STATUS: SERVES AS A MONITORED POINT AT THE M&C SOFTWARE (FRONT-END) AND AS A HEATING/COOLING REQUEST TO THE BOILER, HEAT EXCHANGER, AND/OR CHILLER SERVING THIS SYSTEM (IF APPLICABLE)

DRAFT

US Army Corps of Engineers
Japan District ®

FOR REVIEW ONLY
THESE DOCUMENTS ARE FOR CONCEPT DESIGN AND NOT INTENDED FOR CONSTRUCTION, BIDDING OR PERMIT PURPOSES. THEY WERE PREPARED BY, OR UNDER SUPERVISION OF:
BRIAN C. ALLERHEILIGEN
NAME
93876 REGISTRATION # 09/04/2025 DATE
TEXAS REGISTERED ENGINEERING FIRM F-2966

MARK	DESCRIPTION	DATE

ISSUE DATE: 09/04/2025
SOLICITATION NO.:
CONTRACT NO.:
DRAWING CODE:

DESIGNED BY: K. WILKINS
DRAWN BY: C. MYERS
CHECKED BY: B. SCHNEIDER
SUBMITTED BY: A. GUERRA
SIZE: ISO A1
FILE NAME: M-813

US ARMY CORPS OF ENGINEERS
JAPAN ENGINEER DISTRICT
OKINAWA, JAPAN

Jacobs
JACOBS GOVERNMENT SERVICES COMPANY
777 MAIN STREET, FORT WORTH, TX 76102 USA

FY25 REPAIR HVAC WIDEBAND SATCOM OPS B100
CAMP BUCKNER COMMUNICATIONS ANNEX
OKINAWA, JAPAN
PROJECT NUMBER:D3449305

I/O POINTS LIST

SHEET ID
M-813

FILE PATH: C:\Users\MOHAPPC\Documents\D3449305-M-3D_MOHAPPC.rvt
PLOT DATE: 8/29/2025 3:11:03 PM PLOTTED BY: PLOT SCALE:
BACKCHECK SUBMITTAL DESIGN

FCU SYSTEMS
NODE: <DDC##>
NODE LOCATION: <____>
NODE ADDRESS DOMAIN = <____>, SUBNET = <____>, NODE = <____>
NODE ID: <____>

FUNCTION	POINT ID	DESCRIPTION	DDC HARDWARE ID	SETTING (WITH UNITS)	RANGE (WITH UNITS)	IO TYPE	HOA REQ'D	CONFIG. TYPE	M&C VIEW AND OVRD	LDP VIEW AND OVRD	TREND REQ'D	ALARMING			PRIMARY POINT INFORMATION		NETWORK DATA EXCHANGE		OVERRIDES	ALARM INFORMATION		CONFIGURATION INFORMATION
												ALARM CONDITION (SEE NOTES)	ALARM PRIORITY	M&C ROUTING	OBJECT TYPE AND INSTANCE NUMBER (AND PROPERTY ID)	NIAGARA ID	DATA FROM	DATA TO	OBJECT TYPE & INSTANCE NUMBER OR COMMANDABLE	ALARM TYPE (PROVIDE DDC ID FOR REMOTE IN)	NOTIFCATION CLASS OBJECT INSTANCE NUMBER	
PROOF AND SAFETIES	MS-S	MINI-SPLIT STATUS	<____>	~	ON/OFF	BI	~	~	V	V	Y	MISMATCH COMMAND VS STATUS	INFO	<____>								
START STOP	MS-SS	MINI-SPLIT START/STOP	<____>	~	ON/OFF	BO	~	~	VO	V	Y	~	~	~								
TEMPERATURE CONTORL	ZN-T	ZONE TEMPERATURE SENSOR	<____>	~	4-35°C	AI	~	~	V	V	Y	~	INFO	<____>								

NOTES:
1. THE CONTRACTOR MUST COMPLETE THE POINTS SCHEDULE AS INDICATED IN THE SPECIFICATION AND IN ACCORDANCE WITH THE POINTS SCHEDULE INSTRUCTIONS DRAWING.
2. UNIT MANUFACTURERS PROOFS AND SAFETIES: THE CONTRACTOR MUST SHOW EACH PROOF AND SAFETY AS A SEPARATE ROW.
3. UNIT STATUS: SERVES AS A MONITORED POINT AT THE M&C SOFTWARE (FRONT-END) AND AS A HEATING/COOLING REQUEST TO THE BOILER, HEAT EXCHANGER, AND/OR CHILLER SERVING THIS SYSTEM (IF APPLICABLE)

CRAC UNITS
NODE: <DDC##>
NODE LOCATION: <____>
NODE ADDRESS DOMAIN = <____>, SUBNET = <____>, NODE = <____>
NODE ID: <____>

FUNCTION	POINT ID	DESCRIPTION	DDC HARDWARE ID	SETTING (WITH UNITS)	RANGE (WITH UNITS)	IO TYPE	HOA REQ'D	CONFIG. TYPE	M&C VIEW AND OVRD	LDP VIEW AND OVRD	TREND REQ'D	ALARMING			PRIMARY POINT INFORMATION		NETWORK DATA EXCHANGE		OVERRIDES	ALARM INFORMATION		CONFIGURATION INFORMATION
												ALARM CONDITION (SEE NOTES)	ALARM PRIORITY	M&C ROUTING	OBJECT TYPE AND INSTANCE NUMBER (AND PROPERTY ID)	NIAGARA ID	DATA FROM	DATA TO	OBJECT TYPE & INSTANCE NUMBER OR COMMANDABLE	ALARM TYPE (PROVIDE DDC ID FOR REMOTE IN)	NOTIFCATION CLASS OBJECT INSTANCE NUMBER	
START STOP	SF-SS	START/STOP	<____>	~	ON/OFF	BO	~	~	VO	V	Y	~	~	~								
	SF-S	STATUS	<____>	~	ON/OFF	BI	~	~	VO	V	Y	MISMATCH COMMAND VS STATUS	~	~								
TEMPERATURE CONTORL	CLG-V-C	COOLING VALVE CONTROL	<____>	~	0-100%	AO	~	~	V	V	Y	MISMATCH COMMAND VS POSITION	INFO	<____>								
	CLG-V-P	COOLING VALVE POSITION	<____>	~	0-100%	AI	~	~	V	V	Y	MISMATCH COMMAND VS POSITION	INFO	<____>								
	ZN-T	ZONETEMPERATURE SENSOR	<____>	~	4-35°C	AI	~	~	V	V	Y	~	INFO	<____>								

NOTES:
1. THE CONTRACTOR MUST COMPLETE THE POINTS SCHEDULE AS INDICATED IN THE SPECIFICATION AND IN ACCORDANCE WITH THE POINTS SCHEDULE INSTRUCTIONS DRAWING.
2. UNIT MANUFACTURERS PROOFS AND SAFETIES: THE CONTRACTOR MUST SHOW EACH PROOF AND SAFETY AS A SEPARATE ROW.
3. UNIT STATUS: SERVES AS A MONITORED POINT AT THE M&C SOFTWARE (FRONT-END) AND AS A HEATING/COOLING REQUEST TO THE BOILER, HEAT EXCHANGER, AND/OR CHILLER SERVING THIS SYSTEM (IF APPLICABLE)

MECH EF
NODE: <DDC##>
NODE LOCATION: <____>
NODE ADDRESS DOMAIN = <____>, SUBNET = <____>, NODE = <____>
NODE ID: <____>

FUNCTION	POINT ID	DESCRIPTION	DDC HARDWARE ID	SETTING (WITH UNITS)	RANGE (WITH UNITS)	IO TYPE	HOA REQ'D	CONFIG. TYPE	M&C VIEW AND OVRD	LDP VIEW AND OVRD	TREND REQ'D	ALARMING			PRIMARY POINT INFORMATION		NETWORK DATA EXCHANGE		OVERRIDES	ALARM INFORMATION		CONFIGURATION INFORMATION
												ALARM CONDITION (SEE NOTES)	ALARM PRIORITY	M&C ROUTING	OBJECT TYPE AND INSTANCE NUMBER (AND PROPERTY ID)	NIAGARA ID	DATA FROM	DATA TO	OBJECT TYPE & INSTANCE NUMBER OR COMMANDABLE	ALARM TYPE (PROVIDE DDC ID FOR REMOTE IN)	NOTIFCATION CLASS OBJECT INSTANCE NUMBER	
START STOP	EF-SS	START/STOP	<____>	~	ON/OFF	BO	~	~	VO	V	Y	~	~	~								
	EF-S	STATUS	<____>	~	ON/OFF	BI	~	~	VO	V	Y	MISMATCH COMMAND VS STATUS	~	~								
OTHER POINTS	ZN-HY	HYDROGEN SENSOR (WHERE APPLICABLE)	<____>	~	0-2%	AI	~	~	V	~	~	0.5% HYDROGEN	~	~								
	EA-D-2P	EXHAUST AIR DAMPER COMMAND	<____>	~	OPEN/CLOSE	AO	~	~	V	~	~	MISMATCH COMMAND VS POSITION	~	~								

NOTES:
1. THE CONTRACTOR MUST COMPLETE THE POINTS SCHEDULE AS INDICATED IN THE SPECIFICATION AND IN ACCORDANCE WITH THE POINTS SCHEDULE INSTRUCTIONS DRAWING.
2. UNIT MANUFACTURERS PROOFS AND SAFETIES: THE CONTRACTOR MUST SHOW EACH PROOF AND SAFETY AS A SEPARATE ROW.
3. UNIT STATUS: SERVES AS A MONITORED POINT AT THE M&C SOFTWARE (FRONT-END) AND AS A HEATING/COOLING REQUEST TO THE BOILER, HEAT EXCHANGER, AND/OR CHILLER SERVING THIS SYSTEM (IF APPLICABLE)

DRAFT

US Army Corps of Engineers
Japan District ®

FOR REVIEW ONLY
THESE DOCUMENTS ARE FOR CONCEPT DESIGN AND NOT INTENDED FOR CONSTRUCTION, BIDDING OR PERMIT PURPOSES. THEY WERE PREPARED BY, OR UNDER SUPERVISION OF:
BRIAN C. ALLERHEILIGEN
NAME
93876 REGISTRATION # 09/04/2025 DATE
TEXAS REGISTERED ENGINEERING FIRM F-2966

MARK	DESCRIPTION	DATE

ISSUE DATE: 09/04/2025
SOLICITATION NO.:
CONTRACT NO.:
DRAWING CODE:
DESIGNED BY: K. WILKINS
DRAWN BY: C. WEEKS
CHECKED BY: B. SCHNEIDER
SUBMITTED BY: A. GUERRA
FILE NAME: M-814
SIZE: ISO A1

US ARMY CORPS OF ENGINEERS
JAPAN ENGINEER DISTRICT
OKINAWA, JAPAN
Jacobs
JACOBS GOVERNMENT SERVICES COMPANY
777 MAIN STREET, FORT WORTH, TX 76102
USA

FY25 REPAIR HVAC WIDEBAND SATCOM OPS B100
CAMP BUCKNER COMMUNICATIONS ANNEX
OKINAWA, JAPAN
PROJECT NUMBER:D3449305
I/O POINTS LIST

SHEET ID
M-814

FILE PATH: C:\Users\MOHAPPC\Documents\D3449305-M-3D_MOHAPPC.rvt
PLOT DATE: 8/29/2025 3:11:04 PM PLOTTED BY: PLOT SCALE:
BACKCHECK SUBMITTAL DESIGN

PLUMBING FIXTURE SCHEDULE

MARK	ROUGH-IN SIZES				DESCRPITION	NOTES
	W	V	CW	HW		
L-1	40 mm	50mm	15mm	15mm	LAVATORY, VITREOUS CHINA, UNDERMOUNT, 14" X 17" BOWL, ABA COMPLIANT.	
WC-1	100 mm	50mm	15mm		WATER CLOSET, WALL-MOUNT, MANUAL FLUSH VALVE, 4.8 LPF.	

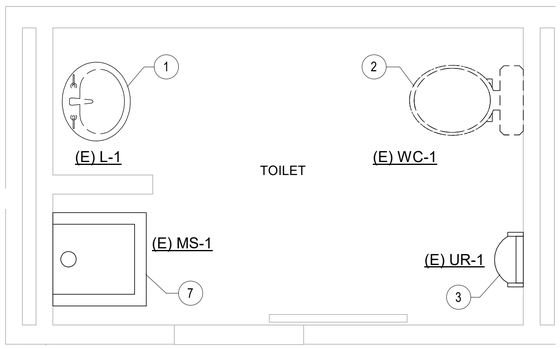

A1 ENLARGED PLUMBING DEMOLITION PLAN - AREA B
1 : 20

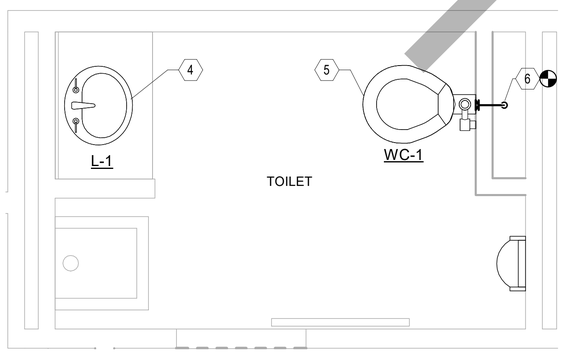

A4 ENLARGED PLUMBING FLOOR PLAN - AREA B
1 : 20

DRAFT

GENERAL SHEET NOTES

SHEET KEYNOTES

1	REMOVE EXISTING LAVATORY. EXISTING PIPING TO REMAIN TO SERVE NEW.
2	REMOVE EXISTING WATER CLOSET. EXISTING PIPING TO REMAIN TO SERVE NEW.
3	EXISTING URINAL TO BE REMOVED, SALVAGED, AND REINSTALLED.
4	PROVIDE NEW LAVATORY, L-1. CONNECT TO EXISTING COLD WATER, HOT WATER, WASTE AND VENT.
5	PROVIDE NEW WATER CLOSET, WC-1. CONNECT TO EXISTING COLD WATER, WASTE AND VENT.
6	CONNECT TO EXISTING SANITARY PIPING.
7	EXISTING MOP SINK TO REMAIN.

KEY PLAN

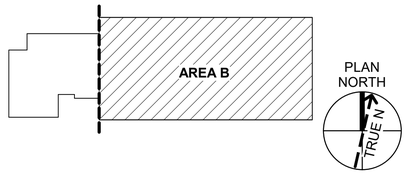

GRAPHIC SCALE(S)

0 200 400 800
SCALE: 1:20

US Army Corps of Engineers
Japan District ®

MARK	DESCRIPTION	DATE

DESIGNED BY: K. WILKINS
DRAWN BY: C. HAYNES
CHECKED BY: B. SCHNEIDER
SUBMITTED BY: A. GUERRA
SIZE: ISO A1
ISSUE DATE: 09/04/2025
SOLICITATION NO.: -
CONTRACT NO.: -
DRAWING CODE: -
FILE NAME: P-101

US ARMY CORPS OF ENGINEERS
JAPAN ENGINEER DISTRICT
OKINAWA, JAPAN

Jacobs
JACOBS GOVERNMENT SERVICES COMPANY
777 MAIN STREET / FORT WORTH, TX 76102
USA

FY25 REPAIR HVAC WIDEBAND SATCOM OPS B100
CAMP BUCKNER COMMUNICATIONS ANNEX
OKINAWA, JAPAN
PROJECT NUMBER:D3449305

PARTIAL PLUMBING FLOOR PLAN - AREA B

SHEET ID
P-101

M P-101-

FILE PATH: C:\Users\MOHAPPC\Documents\D3449305-M-3D_MOHAPPC.rvt
PLOT DATE: 8/29/2025 3:51:22 PM PLOTTED BY: PLOT SCALE: 1 : 20

BACKCHECK SUBMITTAL DESIGN

ABBREVIATIONS

A, AMPS	AMPERES
AAFES	ARMY & AIR FORCE EXCHANGE SERVICE
AFF	ABOVE FINISHED FLOOR
AIC	AMPERE INTERRUPTING CURRENT
AV	AUDIO & VISUAL
AWG	AMERICAN WIRE GAUGE
C	CONDUIT
CKT	CIRCUIT
CU	CONDENSING UNIT
DIA	DIAMETER
(E)	EXISTING
EF	EXHAUST FAN
FA	FIRE ALARM
FACP	FIRE ALARM CONTROL PANEL
FC	FAN COIL
FLA	FULL LOAD AMPS
FPB	FAN POWERED BOX
FRP	FIBER REINFORCE PLASTIC
G,GND	GROUND, GROUND WIRE
GFI	GROUND FAULT CIRCUIT INTERRUPTER
HH	HANDHOLE
HP	HORSEPOWER
HVAC	HEATING, VENTILATION, AND AIR CONDITIONING
HZ	HERTZ
J, J-BOX	JUNCTION BOX
KV	KILOVOLT
KVA	KILOVOLT-AMPERES
KW	KILOWATT
KWH	KILOWATT-HOUR
LED	LIGHT EMITTING DIODE
LTG	LIGHTING
MCA	MINIMUM CIRCUIT AMPACITY
MCB	MAIN CIRCUIT BREAKER
MGB	MAIN GROUND BAR
MH	MOUNTING HEIGHT
MIN	MINIMUM
MLO	MAIN LUGS ONLY
N	NEUTRAL
NEC	NATIONAL ELECTRICAL CODE
NEMA	NATIONAL ELECTRICAL MANUFACTURER'S ASSOCIATION
NF	NON-FUSED
NFPA	NATIONAL FIRE PROTECTION ASSOCIATION
NTS	NOT TO SCALE
OC	ON CENTER
OH	OVERHEAD
OS	OCCUPANCY SENSOR
PBB	PRIMARY BONDING BUSBAR
PF	POWER FACTOR
PH	PHASE
QTY	QUANTITY
RTU	ROOF TOP UNIT
SPD	SURGE PROTECTION DEVICE
TYP	TYPICAL
UFC	UNITED FACILITIES CRITERIA
UON	UNLESS OTHERWISE NOTED
V	VOLT
VA	VOLT-AMPERE
VAV	VARIABLE AIR VOLUME
VFD	VARIABLE FREQUENCY DRIVE
W	WATT
XFMR	TRANSFORMER

ONE-LINE DIAGRAM

- THERMAL MAGNETIC CIRCUIT BREAKER
- CURRENT TRANSFORMER
- POTENTIAL TRANSFORMER
- DISCONNECT SWITCH
- SWITCH
- FUSED SWITCH
- GROUND
- M — METER
- PANEL NAME RM XXX — PANELBOARD WITH LOCATION
- SPD — SURGE PROTECTION DEVICE
- SURGE ARRESTER
- TRANSFORMER
- MOTOR
- EQUIPMENT TO BE DEMOLISHED

LIGHTING

EXST. DEMO NEW

- 600MM X 1200MM LENSED FIXTURE. LETTER INDICATES TYPE PER FIXTURE SCHEDULE.
- EXIT SIGN WITH DIRECTIONAL ARROWS AS INDICATED, CEILING MOUNTED.
- RECESSED SLOT LIGHT. LETTER INDICATES TYPE PER THE FIXTURE SCHEDULE.
- ROUND FIXTURE, LETTER INDICATES TYPE PER FIXTURE SCHEDULE.
- S_{XS} S_{XS} S_{XS} — WALL MOUNTED SENSOR SWITCH
  X =
  O = OCCUPANCY SENSOR
  V = VACANCY SENSOR
- OS X# OS X# OS X# — CEILING MOUNTED MOTION SENSOR
  X =
  O = OCCUPANCY SENSOR
  V = VACANCY SENSOR
  P = PHOTO SENSOR
  # =
  1 = NORMAL RANGE
  2 = EXTENDED RANGE

POWER

EXST. DEMO NEW

- WALL MOUNTED NEMA 5-20 DUPLEX RECEPTACLE
  GFI = GROUND FAULT CIRCUIT INTERRUPTING
  EXT = EXTERIOR RECEPTACLE INCLUDING
  GFI
  WEATHERPROOF (WITH "IN-USE" COVER)
  EXTRA HEAVY DUTY RATING
- S_M S_M S_M — MOTOR RATED SWITCH.
- DISCONNECT SWITCH IN ENCLOSURE MOUNTED 5' AFF UON. NON-FUSED UON.
  AAA/B/CCC INDICATES RATINGS FOR "VOLTAGE" / "POLES" / "AMPERAGE". EXAMPLE 600/3/100
- SURFACE MOUNTED PANELBOARD
- APPROXIMATE WORKING CLEARANCE. CONFORM TO NEC REQUIREMENTS. AREAS SHOWN FOR PLANNING PURPOSES ONLY.

GROUNDING & LIGHTNING PROTECTION

EXST. NEW

- GROUNDING ROD
- GROUND ROD TEST WELL
- BOND
- G — G — GROUNDING CONDUCTOR
- GROUND BAR
  -MGB: MAIN GROUND BAR
  -EGB: ELECTRICAL GROUND BAR
  -PBB: PRIMARY BONDING BUSBAR
  -SBB: SECONDARY BONDING BUSBAR

GENERAL NOTES - ELECTRICAL

A	PERFORM ELECTRICAL WORK IN ACCORDANCE WITH 2023 NEC, APPLICABLE UFCS, AND BASE STANDARDS. IN THE EVENT OF CONFLICT, THE ORDER OF PRECEDENCE IS BASE STANDARDS, APPLICABLE UFC, 2023 NEC.
B	EXISTING CONDITIONS SHOWN ARE BASED ON SURVEY. STUDY AVAILABLE REFERENCE DRAWINGS AND VERIFY EXISTING CONDITIONS. ADJUST ARRANGEMENT AND LOCATION OF NEW ELECTRICAL WORK SHOWN TO AVOID CONFLICT WITH EXISTING UTILITIES PRIOR TO BEGINNING CONSTRUCTION. WHERE EXISTING UTILITIES CANNOT BE AVOIDED, COORDINATE WITH THE CONTRACTING OFFICER TO INCLUDE ALL WORK FOR REMOVAL AND RELOCATION OF EXISTING UTILITIES AND ADDITIONAL WORK NECESSARY TO ACCOMMODATE UPDATE/REPAIR.
C	ELECTRICAL DRAWINGS ARE DIAGRAMMATIC AND MAY NOT SHOW ALL DETAILS AND COMPONENTS. INCLUDE IN BID ALL ELECTRICAL WORK INCLUDING ALL COMPONENTS, MATERIALS, AND EQUIPMENT IN COORDINATION WITH ALL TRADES FOR A COMPLETE AND OPERABLE SYSTEM WITHIN THE INTENT INDICATED.
D	RESTORE ALL DAMAGED AREAS (TO MATCH SURROUNDINGS) INCLUDING LANDSCAPING AND GRASS, UTILITIES, AND STRUCTURES AFTER COMPLETION OF WORK.
E	WORKING SPACES ABOUT ELECTRICAL EQUIPMENT MUST BE IN COMPLIANCE WITH NEC 110.26.
F	FLUSH MOUNT ALL SWITCHES AND RECEPTACLES IN FINISHED AREAS. SWITCHES AND RECEPTACLES MUST BE SURFACE MOUNTED IN EXPOSED SPACES. UNLESS OTHERWISE NOTED, CONCEAL ALL CONDUIT IN WALLS OR ABOVE ACCESSIBLE CEILING. CONDUIT IN ROOMS WITH NO CEILING THAT ARE EXPOSED TO STRUCTURE MAY BE EXPOSED, MOUNTED TO BUILDING STRUCTURE. DO NOT INSTALL CONDUITS IN CONCRETE FLOORS. CONDUITS MUST BE ROUTED PARALLEL OR PERPENDICULAR TO BUILDING LINES.
G	PROVIDE ALL SUPPLEMENTAL SUPPORTING DEVICES REQUIRED FOR ELECTRICAL EQUIPMENT WHERE THE BUILDING STRUCTURE IS NOT SUITABLE FOR DIRECT MOUNTING.
H	UNLESS OTHERWISE NOTED, ALL CONDUCTORS ARE SIZED FOR COPPER TYPE THWN, THHN, AND RATED FOR 60 DEGREE C FOR CIRCUITS RATED 100A OR LESS AND 75 DEGREE C FOR CIRCUITS OVER 100A.
J	PROVIDE A DEDICATED EQUIPMENT GROUNDING CONDUCTOR, SIZED PER THE NEC, WITH EACH BRANCH CIRCUIT. CONDUIT MAY NOT SUBSTITUTE AS AN EQUIPMENT GROUND.
K	INSTALL ALL WIRING IN RACEWAYS.
L	SEAL ALL CONDUIT PENETRATIONS USING A LISTED SEALANT (INCLUDING FIRESTOPPING) FOR THE APPROPRIATE APPLICATION ON WALLS, PARTITIONS, FLOORS, ROOF, ETC.
M	UTILIZE COMPRESSION FITTINGS FOR CONDUIT CONNECTIONS. SET SCREW FITTINGS ARE NOT ACCEPTABLE.
N	PROVIDE LOCKABLE BREAKERS FOR ALL FIRE PROTECTION/ALARM DEVICES. PAINT ENCLOSURES, BREAKERS, AND PAD-LOCKING MECHANISMS RED. AT THE DISTRIBUTION EQUIPMENT, PROVIDE A LABEL INSCRIBED "FIRE PROTECTION/LIFE SAFETY EQUIPMENT." USE RED LAMINATED PLASTIC WITH WHITE CORE FOR THE LABEL.
P	ALL WIRING AND EQUIPMENT MUST BE UL LISTED & LABELED, NEW, AND INSTALLED IN CONFORMANCE WITH THE UFC AND NFPA 70.
Q	UNLESS OTHERWISE INDICATED, ALL WIRING MUST BE IN ACCORDANCE WITH MANUFACTURER RECOMMENDATIONS. CONDUIT MUST BE 21MM MINIMUM.
R	PROVIDE EACH 120V, 20A BRANCH CIRCUIT FROM APPLIANCE TO PANELBOARDS WITH A SEPARATE NEUTRAL FOR EACH PHASE CONDUCTOR. NO SHARED NEUTRALS ARE PERMITTED UNLESS OTHERWISE INDICATED. BRANCH CIRCUIT HOME RUN WIRING MAY BE COMBINED UP TO A MAXIMUM OF (9) CURRENT CARRYING CONDUCTORS IN A CONDUIT SIZED PER NFPA 70. NEUTRAL MUST BE INCLUDED AS CURRENT CARRYING CONDUCTORS.
S	PROVIDE 2.0MM PHASE, NEUTRAL AND GROUND CONDUCTOR FOR 120V, 20A BRANCH CIRCUITS NOT EXCEEDING 100 FEET. PROVIDE 5.5MM PHASE, NEUTRAL, AND GROUND CONDUCTORS FOR 120V, 20A BRANCH CIRCUIT EXCEEDING 100 FEET AND FOR 277V, 20A CIRCUITS EXCEEDING 200 FEET. UNLESS OTHERWISE NOTED, PROVIDE (2) 2.0MM,(1) 2.0MM G, IN 21MM C FOR SINGLE PHASE CIRCUITS AND (3) 2.0MM, (1) 2.0MM G, IN 21MM C FOR THREE PHASE CIRCUITS.
T	PROVIDE A CONCRETE HOUSEKEEPING PAD FOR ALL FLOOR MOUNTED ELECTRICAL EQUIPMENT.

DRAFT

US Army Corps of Engineers
Japan District ®

FOR REVIEW ONLY
THESE DOCUMENTS ARE FOR CONCEPT DESIGN AND NOT INTENDED FOR CONSTRUCTION, BIDDING OR PERMIT PURPOSES. THEY WERE PREPARED BY, OR UNDER SUPERVISION OF:
CHRIS A. ZABRANSKY
NAME
152497 — REGISTRATION #
09/04/2025 — DATE
TEXAS REGISTERED ENGINEERING FIRM F-2966

MARK	DESCRIPTION	DATE

ISSUE DATE: 09/04/2025
SOLICITATION NO.:
CONTRACT NO.:
DRAWING CODE:
DESIGNED BY: C. ZABRANSKY
DRAWN BY: C. ZABRANSKY
CHECKED BY: C. KOHRMANN
SUBMITTED BY: A. GUERRA
SIZE: ISO A1
FILE NAME: E-001

US ARMY CORPS OF ENGINEERS
JAPAN ENGINEER DISTRICT
OKINAWA, JAPAN

Jacobs
JACOBS GOVERNMENT SERVICES COMPANY
777 MAIN STREET, FIFTH FLOOR, FT. WORTH, TX 76102
USA

FY25 REPAIR HVAC WIDEBAND SATCOM OPS B100
CAMP BUCKNER COMMUNICATIONS ANNEX
OKINAWA, JAPAN
PROJECT NUMBER:D3449305

LEGEND AND ABBREVIATIONS

SHEET ID
E-001

FILE PATH: C:\Users\zabranca\Documents\D3449305-E-3D_chris.zabransky.rvt
PLOT DATE: 8/29/2025 9:17:07 AM PLOTTED BY: PLOT SCALE: 1 : 50

BACKCHECK SUBMITTAL DESIGN

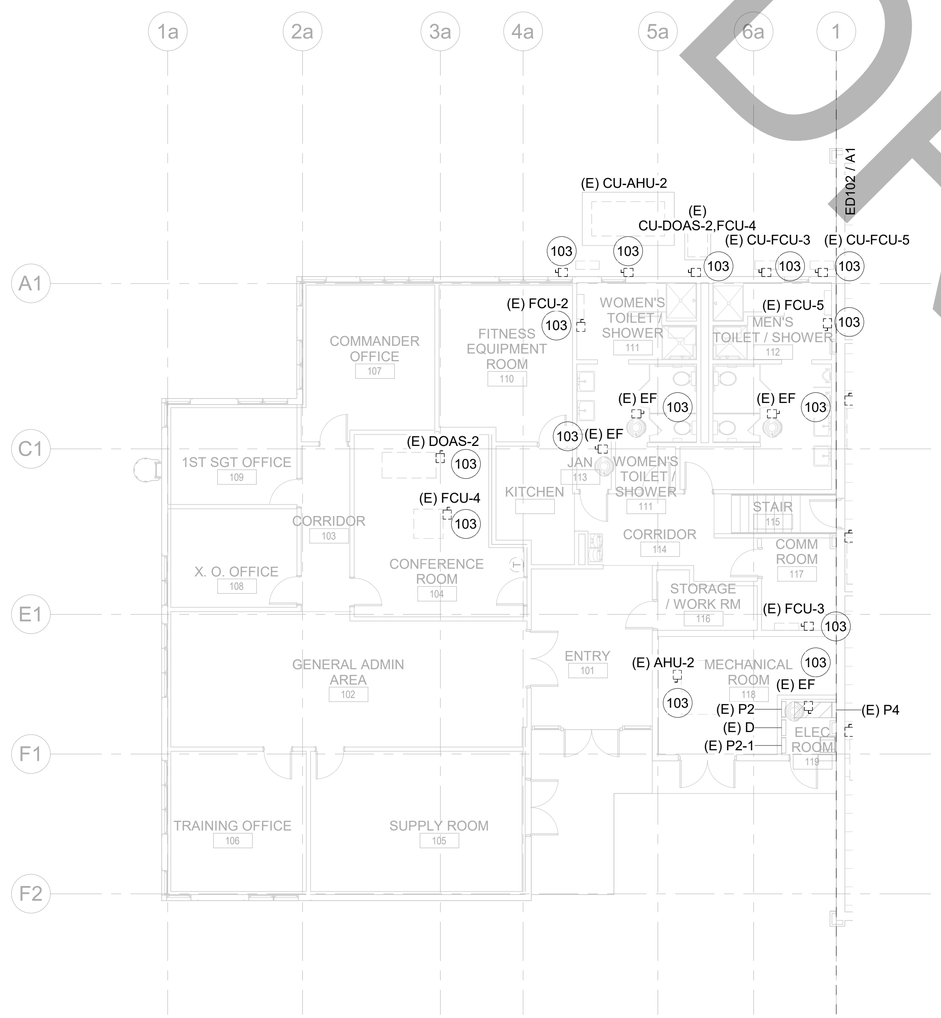

DRAFT

A1 PARTIAL POWER PLAN - AREA A - DEMO
1 : 100

GENERAL NOTES - POWER - DEMO

1	REFER TO E-001 FOR GENERAL NOTES AND LEGENDS.
2	COORDINATE ALL OUTAGES WITH THE CONTRACTING OFFICER IN WRITING 21 DAYS PRIOR TO OUTAGE. OUTAGES MAY NOT LAST LONGER THAN 6 HOURS. PROVIDE THE CONTRACTING OFFICER WITH DETAILED TEMPORARY POWER PLANS IF NECESSARY.
3	PERFORM AS MUCH WORK AS FEASIBLE WITH LOCKED OUT, UNTERMINATED CONDUCTORS TO NEW POWER FEEDS BEFORE DE-ENERGIZING EXISTING EQUIPMENT TO ENSURE QUICK TRANSITIONS FROM OLD TO NEW EQUIPMENT.
4	WHEN OLD WIRING AND CONDUIT INFRASTRUCTURE IS DISCONNECTED, DEMOLISH BACK TO THE SOURCE AND RECONDITION THE PATHWAY TO PROVIDE LIKE-NEW CONDITION WITH SEALED PENETRATIONS AS APPROPRIATE AND SPECIFIED. PROVIDE A FINISHED LOOK WHEREVER FEASIBLE. COORDINATE WITH ARCHITECTURAL TRADES.

KEYNOTES

103	PHASE 3: DISCONNECT POWER TO MECHANICAL EQUIPMENT TO BE DEMOLISHED. REMOVE DISCONNECT SWITCH, CABLE AND CONDUIT BACK TO SOURCE. TURN CIRCUIT BREAKER OFF AND UPDATE THE PANEL DIRECTORY AS SPARE IF ALL LOADS HAVE BEEN REMOVED FROM THE CIRCUIT.

KEY PLAN

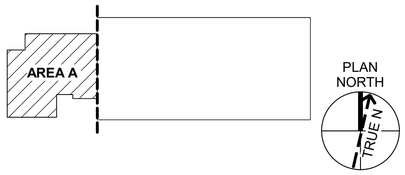

GRAPHIC SCALE(S)

0 2000 4000
SCALE: 1:100

US Army Corps of Engineers
Japan District ®

FOR REVIEW ONLY
THESE DOCUMENTS ARE FOR CONCEPT DESIGN AND NOT INTENDED FOR CONSTRUCTION, BIDDING OR PERMIT PURPOSES. THEY WERE PREPARED BY, OR UNDER SUPERVISION OF:
CHRIS A. ZABRANSKY
NAME
152497 09/04/2025
REGISTRATION # DATE
TEXAS REGISTERED ENGINEERING FIRM F-2966

MARK	DESCRIPTION	DATE

DESIGNED BY: C. ZABRANSKY
DRAWN BY: C. ZABRANSKY
CHECKED BY: C. KOHRMANN
SUBMITTED BY: A. GUERRA
SIZE: ISO A1
FILE NAME: ED101
ISSUE DATE: 09/04/2025
SOLICITATION NO.:
CONTRACT NO.:
DRAWING CODE:

US ARMY CORPS OF ENGINEERS
JAPAN ENGINEER DISTRICT
OKINAWA, JAPAN

Jacobs
JACOBS GOVERNMENT SERVICES COMPANY
777 MAIN STREET / FORT WORTH, TX 76102 USA

FY25 REPAIR HVAC WIDEBAND SATCOM OPS B100
CAMP BUCKNER COMMUNICATIONS ANNEX
OKINAWA, JAPAN
PROJECT NUMBER:D3449305

PARTIAL DEMOLITION POWER PLAN - AREA A

SHEET ID
ED101

E ED101-

FILE PATH: C:\Users\zabranca\Documents\D3449305-E-3D_chris.zabransky.rvt
PLOT DATE: 8/29/2025 9:17:16 AM PLOTTED BY: PLOT SCALE: 1 : 100

BACKCHECK SUBMITTAL DESIGN

KEYNOTES

101	PHASE 1: DISCONNECT POWER TO MECHANICAL EQUIPMENT TO BE DEMOLISHED. REMOVE DISCONNECT SWITCH, CABLE AND CONDUIT BACK TO SOURCE. TURN CIRCUIT BREAKER OFF AND UPDATE THE PANEL DIRECTORY AS SPARE IF ALL LOADS HAVE BEEN REMOVED FROM THE CIRCUIT.
102	PHASE 2: DISCONNECT POWER TO MECHANICAL EQUIPMENT TO BE DEMOLISHED. REMOVE DISCONNECT SWITCH, CABLE AND CONDUIT BACK TO SOURCE. TURN CIRCUIT BREAKER OFF AND UPDATE THE PANEL DIRECTORY AS SPARE IF ALL LOADS HAVE BEEN REMOVED FROM THE CIRCUIT.
103	PHASE 3: DISCONNECT POWER TO MECHANICAL EQUIPMENT TO BE DEMOLISHED. REMOVE DISCONNECT SWITCH, CABLE AND CONDUIT BACK TO SOURCE. TURN CIRCUIT BREAKER OFF AND UPDATE THE PANEL DIRECTORY AS SPARE IF ALL LOADS HAVE BEEN REMOVED FROM THE CIRCUIT.
119	PRIOR TO DEMOLITION OF RF FILTER INSTALL 4-38MM, 1-14MM G, G54C FROM PANEL (E) NO.8 TO TPP PANEL ASSOCIATED WITH TO BE DEMOLISHED RF FILTER. TYP.
120	REMOVE RF FILTER AND CABLE AND CONDUIT BEING FED TO AND FROM RF FILTER. TYP.

GENERAL NOTES - POWER - DEMO

1	REFER TO E-001 FOR GENERAL NOTES AND LEGENDS.
2	COORDINATE ALL OUTAGES WITH THE CONTRACTING OFFICER IN WRITING 21 DAYS PRIOR TO OUTAGE. OUTAGES MAY NOT LAST LONGER THAN 6 HOURS. PROVIDE THE CONTRACTING OFFICER WITH DETAILED TEMPORARY POWER PLANS IF NECESSARY.
3	PERFORM AS MUCH WORK AS FEASIBLE WITH LOCKED OUT, UNTERMINATED CONDUCTORS TO NEW POWER FEEDS BEFORE DE-ENERGIZING EXISTING EQUIPMENT TO ENSURE QUICK TRANSITIONS FROM OLD TO NEW EQUIPMENT.
4	WHEN OLD WIRING AND CONDUIT INFRASTRUCTURE IS DISCONNECTED, DEMOLISH BACK TO THE SOURCE AND RECONDITION THE PATHWAY TO PROVIDE LIKE-NEW CONDITION WITH SEALED PENETRATIONS AS APPROPRIATE AND SPECIFIED. PROVIDE A FINISHED LOOK WHEREVER FEASIBLE. COORDINATE WITH ARCHITECTURAL TRADES.

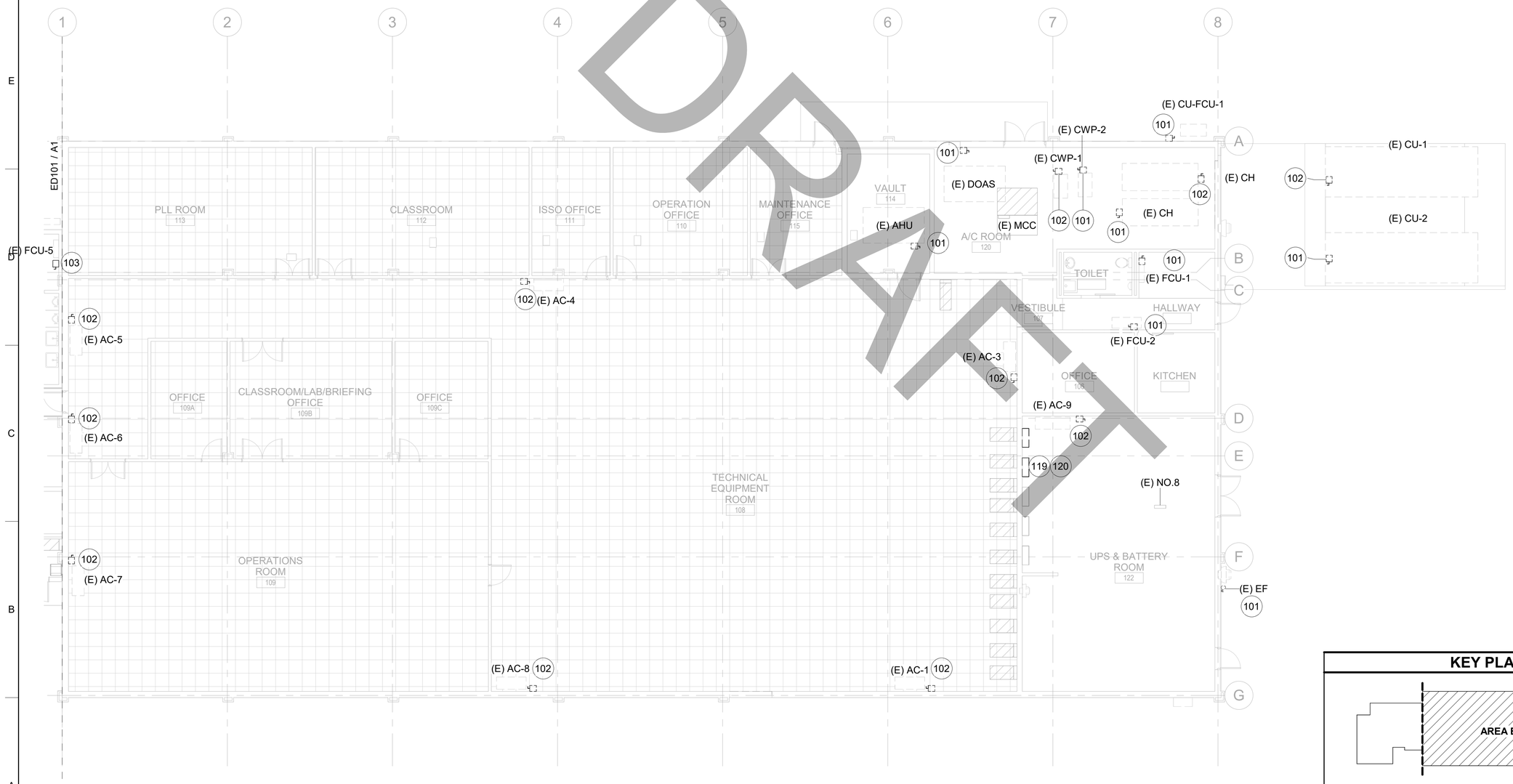

A1 PARTIAL POWER PLAN - AREA B - DEMO
1 : 100

DRAFT

KEY PLAN

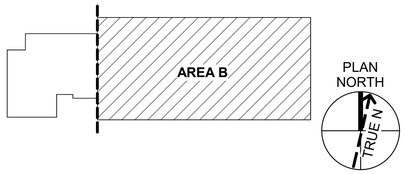

GRAPHIC SCALE(S)

0 2000 4000
SCALE: 1:100

US Army Corps of Engineers
Japan District ®

FOR REVIEW ONLY

THESE DOCUMENTS ARE FOR CONCEPT DESIGN AND NOT INTENDED FOR CONSTRUCTION, BIDDING OR PERMIT PURPOSES. THEY WERE PREPARED BY, OR UNDER SUPERVISION OF:

CHRIS A. ZABRANSKY
NAME
152497 REGISTRATION # 09/04/2025 DATE
TEXAS REGISTERED ENGINEERING FIRM F-2966

MARK	DESCRIPTION	DATE

ISSUE DATE: 09/04/2025
SOLICITATION NO.:
CONTRACT NO.:
DRAWING CODE:

DESIGNED BY: C. ZABRANSKY
DRAWN BY: C. ZABRANSKY
CHECKED BY: C. KOHRMANN
SUBMITTED BY: A. GUERRA
SIZE: ISO A1
FILE NAME: ED102

US ARMY CORPS OF ENGINEERS
JAPAN ENGINEER DISTRICT
OKINAWA, JAPAN

Jacobs
JACOBS GOVERNMENT SERVICES COMPANY
777 MAIN STREET, FT. WORTH, TX 76102
USA

FY25 REPAIR HVAC WIDEBAND SATCOM OPS B100
CAMP BUCKNER COMMUNICATIONS ANNEX
OKINAWA, JAPAN
PROJECT NUMBER:D3449305

PARTIAL DEMOLITION POWER PLAN - AREA B

SHEET ID
ED102

E ED102-

FILE PATH: C:\Users\zabranca\Documents\D3449305-E-3D_chris.zabransky.rvt
PLOT DATE: 8/29/2025 9:17:17 AM PLOTTED BY: PLOT SCALE: 1 : 100

BACKCHECK SUBMITTAL DESIGN

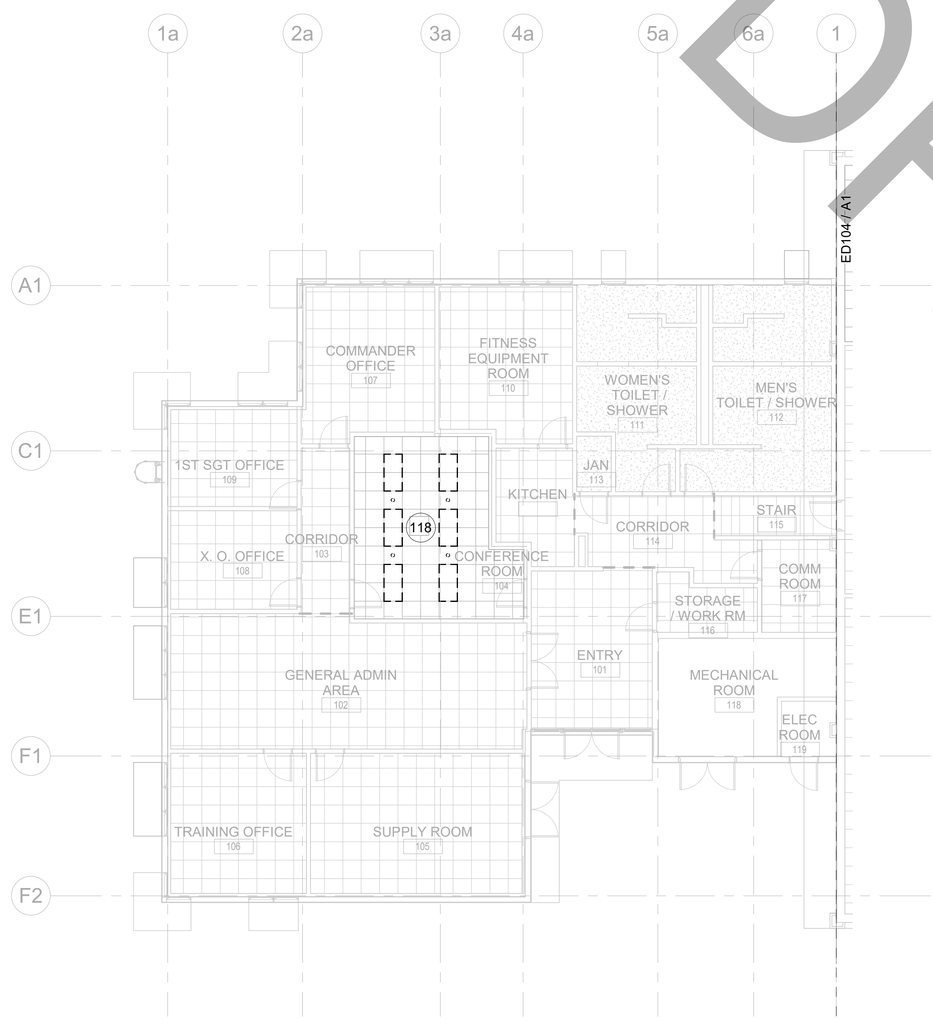

DRAFT

A1 PARTIAL LIGHTING PLAN - AREA A - DEMO

1 : 100

GENERAL NOTES - LIGHTING - DEMO

A	REFER TO SHEET E-001 FOR GENERAL NOTES AND SYMBOL LEGEND.
B	REMOVE LIGHT FIXTURES, WIRE, AND THE ASSOCIATED CONDUITS BACK TO NEAREST JUNCTION BOX. VERIFY EXISTING CONDINTIONS IN FIELD.

KEYNOTES

118	DEMO ASSOCIATED LOCAL LIGHTING CONTROLS, PULL WIRE BACK TO NEAREST JUNCTION BOX.

KEY PLAN

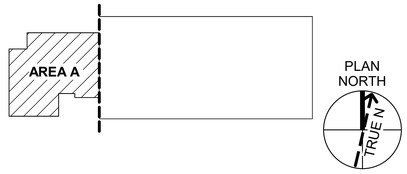

GRAPHIC SCALE(S)

0 2000 4000

SCALE: 1:100

US Army Corps of Engineers
Japan District ®

FOR REVIEW ONLY

THESE DOCUMENTS ARE FOR CONCEPT DESIGN AND NOT INTENDED FOR CONSTRUCTION, BIDDING OR PERMIT PURPOSES. THEY WERE PREPARED BY, OR UNDER SUPERVISION OF:

CHRIS A. ZABRANSKY
NAME

152497 — REGISTRATION #
09/04/2025 — DATE

TEXAS REGISTERED ENGINEERING FIRM F-2966

MARK	DESCRIPTION	DATE

ISSUE DATE: 09/04/2025
SOLICITATION NO.: -
CONTRACT NO.: -
DRAWING CODE: -

DESIGNED BY: C. ZABRANSKY
DRAWN BY: C. ZABRANSKY
CHECKED BY: C. KOHRMANN
SUBMITTED BY: A. GUERRA
SIZE: ISO A1
FILE NAME: ED103

US ARMY CORPS OF ENGINEERS
JAPAN ENGINEER DISTRICT
OKINAWA, JAPAN

Jacobs
JACOBS GOVERNMENT SERVICES COMPANY
777 MAIN STREET, SUITE 1000 FORT WORTH, TX 76102 USA

FY25 REPAIR HVAC WIDEBAND SATCOM OPS B100
CAMP BUCKNER COMMUNICATIONS ANNEX
OKINAWA, JAPAN
PROJECT NUMBER:D3449305

PARTIAL DEMOLITION LIGHTING PLAN - AREA A

SHEET ID

ED103

E ED103-

FILE PATH: C:\Users\zabranca\Documents\D3449305-E-3D_chris.zabransky.rvt
PLOT DATE: 8/29/2025 9:17:17 AM PLOTTED BY: PLOT SCALE: 1 : 100

BACKCHECK SUBMITTAL DESIGN

KEYNOTES

118	DEMO ASSOCIATED LOCAL LIGHTING CONTROLS, PULL WIRE BACK TO NEAREST JUNCTION BOX.

GENERAL NOTES - LIGHTING - DEMO

A	REFER TO SHEET E-001 FOR GENERAL NOTES AND SYMBOL LEGEND.
B	REMOVE LIGHT FIXTURES, WIRE, AND THE ASSOCIATED CONDUITS BACK TO NEAREST JUNCTION BOX. VERIFY EXISTING CONDINTIONS IN FIELD.

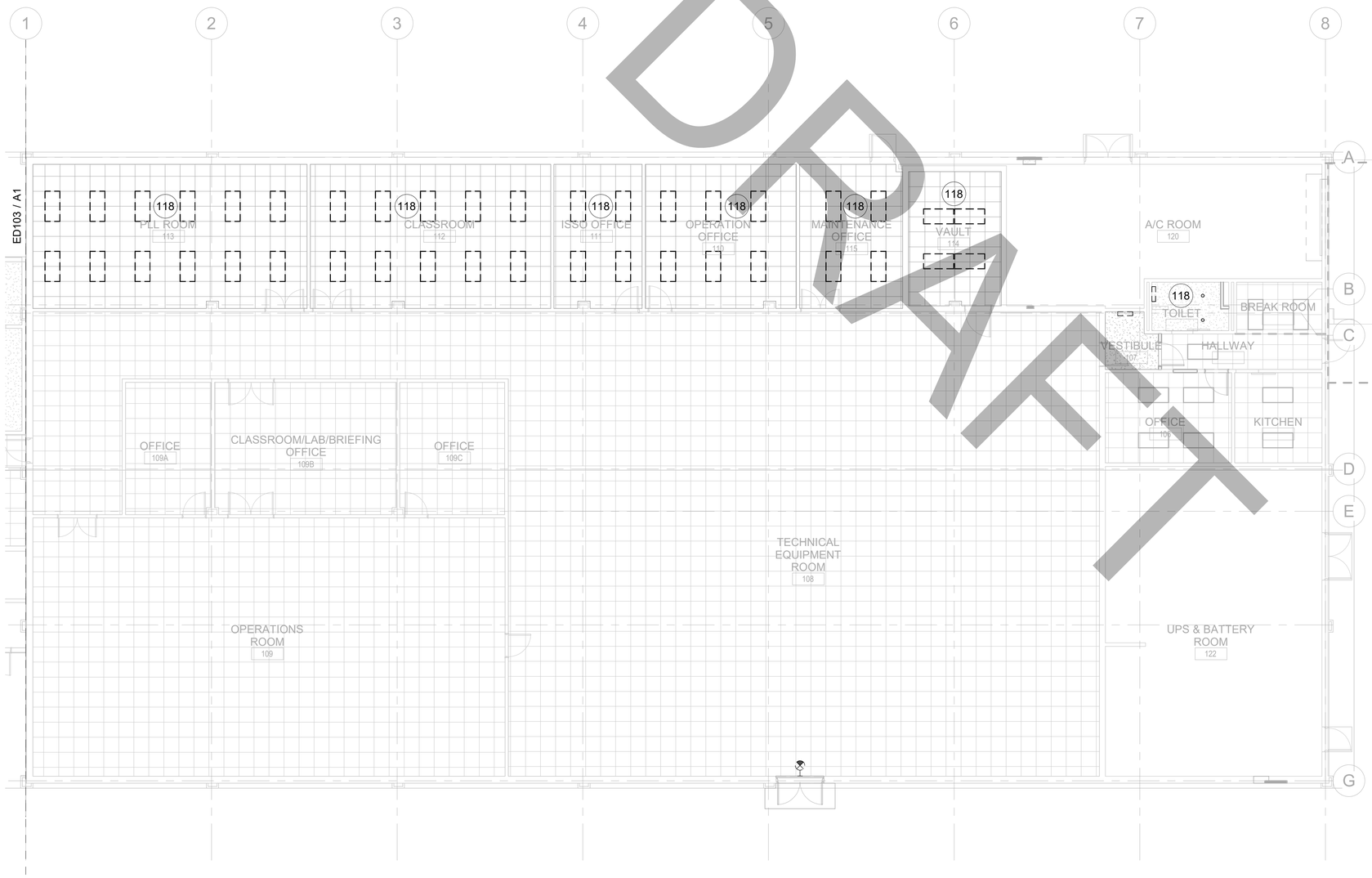

A1 PARTIAL LIGHTING PLAN - AREA B - DEMO
1 : 100

KEY PLAN

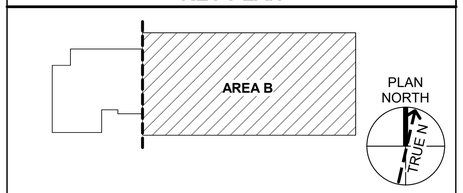

GRAPHIC SCALE(S)

0 2000 4000
SCALE: 1:100

US Army Corps of Engineers
Japan District ®

FOR REVIEW ONLY

THESE DOCUMENTS ARE FOR CONCEPT DESIGN AND NOT INTENDED FOR CONSTRUCTION, BIDDING OR PERMIT PURPOSES. THEY WERE PREPARED BY, OR UNDER SUPERVISION OF:

CHRIS A. ZABRANSKY
NAME
152497 09/04/2025
REGISTRATION # DATE
TEXAS REGISTERED ENGINEERING FIRM F-2966

MARK	DESCRIPTION	DATE

ISSUE DATE: 09/04/2025
SOLICITATION NO.:
CONTRACT NO.:
DRAWING CODE:

DESIGNED BY: C. ZABRANSKY
DRAWN BY: C. ZABRANSKY
CHECKED BY: C. KOHRMANN
SUBMITTED BY: A. GUERRA
SIZE: ISO A1
FILE NAME: ED104

US ARMY CORPS OF ENGINEERS
JAPAN ENGINEER DISTRICT
OKINAWA, JAPAN

Jacobs
JACOBS GOVERNMENT SERVICES COMPANY
777 MAIN STREET, FT. WORTH, TX 76102
USA

FY25 REPAIR HVAC WIDEBAND SATCOM OPS B100
CAMP BUCKNER COMMUNICATIONS ANNEX
OKINAWA, JAPAN
PROJECT NUMBER:D3449305

PARTIAL DEMOLITION LIGHTING PLAN - AREA B

SHEET ID
ED104

E ED104-

FILE PATH: C:\Users\zabranca\Documents\D3449305-E-3D_chris.zabransky.rvt
PLOT DATE: 8/29/2025 9:17:18 AM PLOTTED BY: PLOT SCALE: 1 : 100

BACKCHECK SUBMITTAL DESIGN

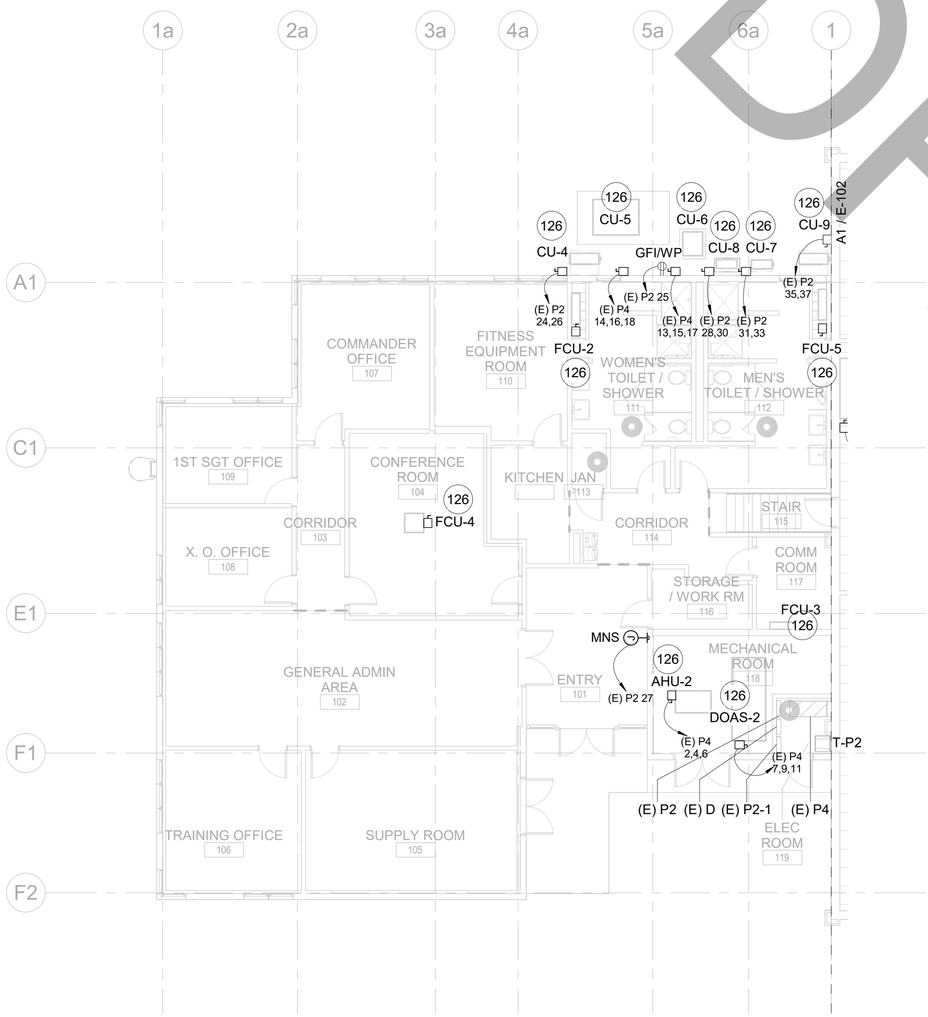

A1 PARTIAL POWER PLAN - AREA A

1 : 100

DRAFT

GENERAL NOTES - POWER

A	REFER TO SHEET E-001 FOR GENERAL NOTES AND SYMBOL LEGEND.
B	ALL EQUIPMENT LOCATED ON THE EXTERIOR OF THE BUILDING MUST BE NEMA 4X STAINLESS STEEL UON.
C	COORDINATE POWER REQUIREMENTS FOR ALL EQUIPMENT WITH OTHER TRADES.
D	BOND NEW ROOFTOP MECHANICAL EQUIPMENT TO EXISTING LIGHTING PROTECTION SYSTEM.
E	PHASE 1 TO BE FULLY OPERATIONAL PRIOR TO BEGINNING PHASE 2.
F	PHASE 2 TO BE FULLY OPERATIONAL PRIOR TO BEGINNING PHASE 3.
G	REFER TO SHEET GI010 AND GI011 FOR PHASING PLAN.
H	PERFORM AS MUCH WORK AS FEASIBLE WITH LOCKED OUT, UNTERMINATED CONDUCTORS TO NEW POWER FEEDS BEFORE DE-ENERGIZING EXISTING EQUIPMENT TO ENSURE QUICK TRANSITIONS FROM OLD TO NEW EQUIPMENT.

KEYNOTES

126	PHASE 3: PROVIDE NEW DISCONNECTING MEANS, CABLE, AND CONDUIT FOR ASSOCIATED MECHANICAL EQUIPMENT. RE/E-603.

KEY PLAN

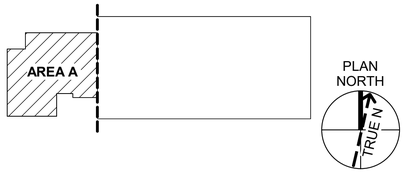

GRAPHIC SCALE(S)

0 2000 4000

SCALE: 1:100

US Army Corps of Engineers
Japan District ®

FOR REVIEW ONLY

THESE DOCUMENTS ARE FOR CONCEPT DESIGN AND NOT INTENDED FOR CONSTRUCTION, BIDDING OR PERMIT PURPOSES. THEY WERE PREPARED BY, OR UNDER SUPERVISION OF:

CHRIS A. ZABRANSKY
NAME

152497 — REGISTRATION #
09/04/2025 — DATE

TEXAS REGISTERED ENGINEERING FIRM F-2966

MARK	DESCRIPTION	DATE

ISSUE DATE: 09/04/2025
SOLICITATION NO.:
CONTRACT NO.:
DRAWING CODE:

DESIGNED BY: C. ZABRANSKY
DRAWN BY: C. ZABRANSKY
CHECKED BY: C. KOHRMANN
SUBMITTED BY: A. GUERRA
SIZE: ISO A1
FILE NAME: E-101

US ARMY CORPS OF ENGINEERS
JAPAN ENGINEER DISTRICT
OKINAWA, JAPAN

Jacobs
JACOBS GOVERNMENT SERVICES COMPANY
777 MAIN STREET, SUITE 1000 FORT WORTH, TX 76102 USA

FY25 REPAIR HVAC WIDEBAND SATCOM OPS B100
CAMP BUCKNER COMMUNICATIONS ANNEX
OKINAWA, JAPAN
PROJECT NUMBER:D3449305

PARTIAL POWER PLAN - AREA A

SHEET ID

E-101

FILE PATH: C:\Users\zabranca\Documents\D3449305-E-3D_chris.zabransky.rvt
PLOT DATE: 8/29/2025 9:17:08 AM PLOTTED BY: PLOT SCALE: 1 : 100

BACKCHECK SUBMITTAL DESIGN

KEYNOTES

121	PROVIDE DIELECTRIC BREAKS FOR ALL UTILITY PENETRATIONS TO SECURE PERIMETER OF THIS SPACE. RE:A1/E-502.
122	BOND ALL METALLIC BODIES PENETRATING THE SECURE SPACE TO THE GROUNDING SYSTEM.
123	COLLOCATE ALL UTILITY PENETRATIONS INTO THIS SPACE.
124	PHASE 1: PROVIDE NEW DISCONNECTING MEANS, CABLE, AND CONDUIT FOR ASSOCIATED MECHANICAL EQUIPMENT. RE/E-603.
125	PHASE 2: PROVIDE NEW DISCONNECTING MEANS, CABLE, AND CONDUIT FOR ASSOCIATED MECHANICAL EQUIPMENT. RE/E-603.
126	PHASE 3: PROVIDE NEW DISCONNECTING MEANS, CABLE, AND CONDUIT FOR ASSOCIATED MECHANICAL EQUIPMENT. RE/E-603.

GENERAL NOTES - POWER

A	REFER TO SHEET E-001 FOR GENERAL NOTES AND SYMBOL LEGEND.
B	ALL EQUIPMENT LOCATED ON THE EXTERIOR OF THE BUILDING MUST BE NEMA 4X STAINLESS STEEL UON.
C	COORDINATE POWER REQUIREMENTS FOR ALL EQUIPMENT WITH OTHER TRADES.
D	BOND NEW ROOFTOP MECHANICAL EQUIPMENT TO EXISTING LIGHTING PROTECTION SYSTEM.
E	PHASE 1 TO BE FULLY OPERATIONAL PRIOR TO BEGINNING PHASE 2.
F	PHASE 2 TO BE FULLY OPERATIONAL PRIOR TO BEGINNING PHASE 3.
G	REFER TO SHEET GI010 AND GI011 FOR PHASING PLAN.
H	PERFORM AS MUCH WORK AS FEASIBLE WITH LOCKED OUT, UNTERMINATED CONDUCTORS TO NEW POWER FEEDS BEFORE DE-ENERGIZING EXISTING EQUIPMENT TO ENSURE QUICK TRANSITIONS FROM OLD TO NEW EQUIPMENT.

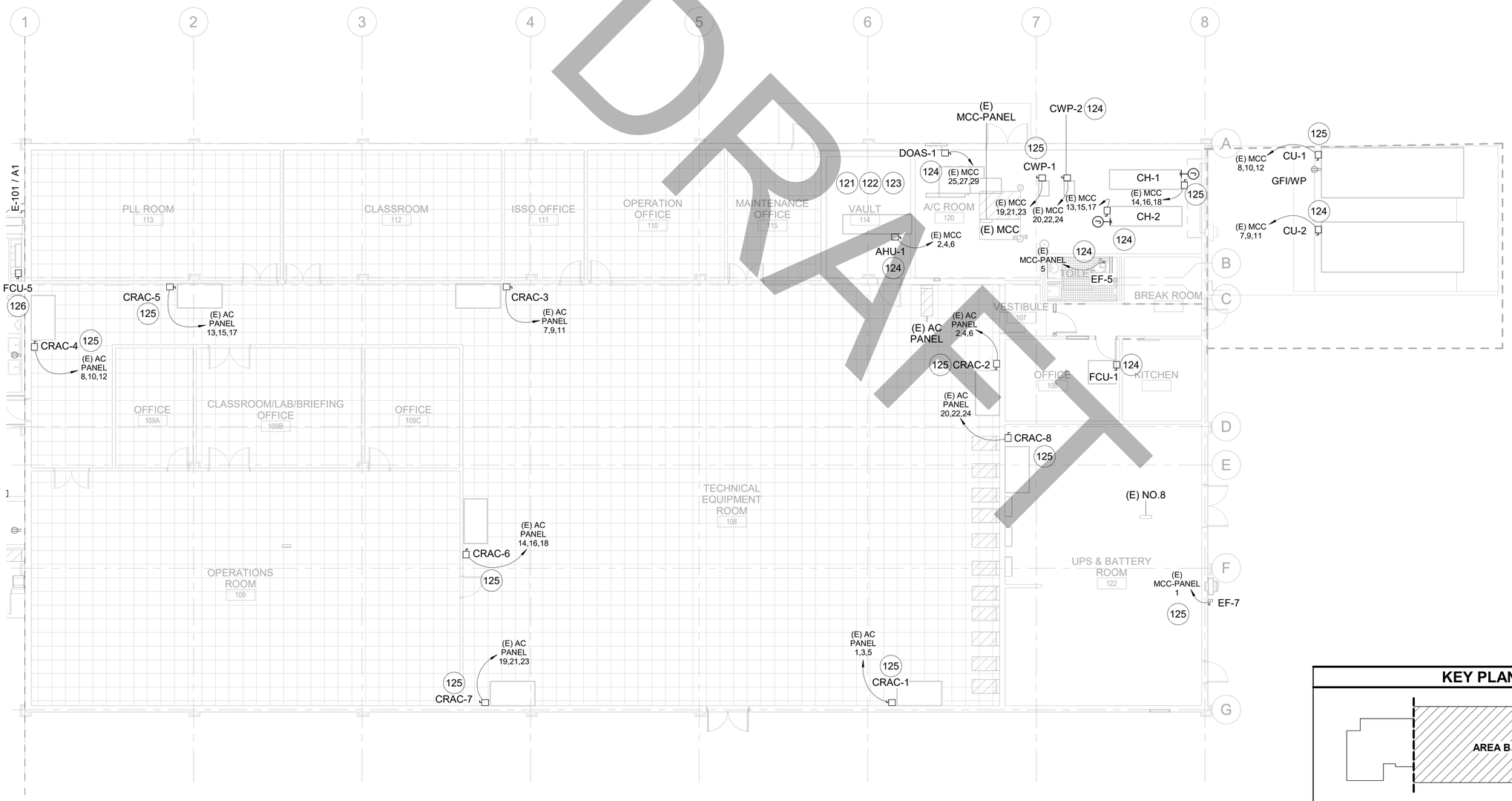

A1 PARTIAL POWER PLAN - AREA B
1 : 100

KEY PLAN

GRAPHIC SCALE(S)

0 2000 4000
SCALE: 1:100

US Army Corps of Engineers
Japan District ®

FOR REVIEW ONLY

THESE DOCUMENTS ARE FOR CONCEPT DESIGN AND NOT INTENDED FOR CONSTRUCTION, BIDDING OR PERMIT PURPOSES. THEY WERE PREPARED BY, OR UNDER SUPERVISION OF:

CHRIS A. ZABRANSKY
NAME
152497 09/04/2025
REGISTRATION # DATE
TEXAS REGISTERED ENGINEERING FIRM F-2966

MARK	DESCRIPTION	DATE

ISSUE DATE: 09/04/2025
SOLICITATION NO.:
CONTRACT NO.:
DRAWING CODE:
DESIGNED BY: C. ZABRANSKY
DRAWN BY: F. CANDELARSKY
CHECKED BY: C. KOHRMANN
SUBMITTED BY: A. GUERRA
SIZE: ISO A1
FILE NAME: E-102

US ARMY CORPS OF ENGINEERS
JAPAN ENGINEER DISTRICT
OKINAWA, JAPAN

Jacobs
JACOBS GOVERNMENT SERVICES COMPANY
777 MAIN STREET, FORT WORTH, TX 76102
USA

FY25 REPAIR HVAC WIDEBAND SATCOM OPS B100
CAMP BUCKNER COMMUNICATIONS ANNEX
OKINAWA, JAPAN
PROJECT NUMBER:D3449305

PARTIAL POWER PLAN - AREA B

SHEET ID

E-102

FILE PATH: C:\Users\zabranca\Documents\D3449305-E-3D_chris.zabransky.rvt
PLOT DATE: 8/29/2025 9:17:09 AM PLOTTED BY: PLOT SCALE: 1 : 100

BACKCHECK SUBMITTAL DESIGN

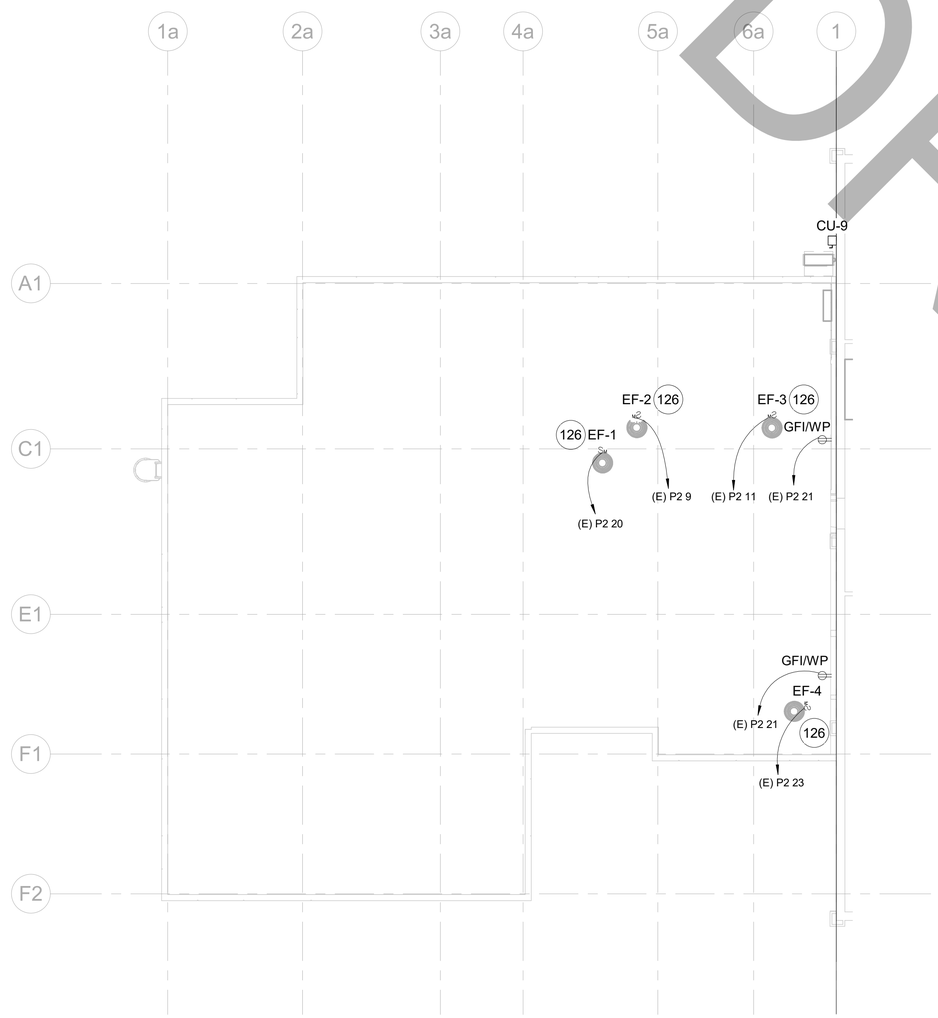

DRAFT

A1 PARTIAL POWER ROOF PLAN - AREA A
1 : 100

GENERAL NOTES - POWER

A	REFER TO SHEET E-001 FOR GENERAL NOTES AND SYMBOL LEGEND.
B	ALL EQUIPMENT LOCATED ON THE EXTERIOR OF THE BUILDING MUST BE NEMA 4X STAINLESS STEEL UON.
C	COORDINATE POWER REQUIREMENTS FOR ALL EQUIPMENT WITH OTHER TRADES.
D	BOND NEW ROOFTOP MECHANICAL EQUIPMENT TO EXISTING LIGHTING PROTECTION SYSTEM.
E	PHASE 1 TO BE FULLY OPERATIONAL PRIOR TO BEGINNING PHASE 2.
F	PHASE 2 TO BE FULLY OPERATIONAL PRIOR TO BEGINNING PHASE 3.
G	REFER TO SHEET GI010 AND GI011 FOR PHASING PLAN.
H	PERFORM AS MUCH WORK AS FEASIBLE WITH LOCKED OUT, UNTERMINATED CONDUCTORS TO NEW POWER FEEDS BEFORE DE-ENERGIZING EXISTING EQUIPMENT TO ENSURE QUICK TRANSITIONS FROM OLD TO NEW EQUIPMENT.

KEYNOTES

126	PHASE 3: PROVIDE NEW DISCONNECTING MEANS, CABLE, AND CONDUIT FOR ASSOCIATED MECHANICAL EQUIPMENT. RE/E-603.

KEY PLAN

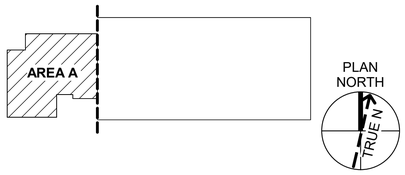

GRAPHIC SCALE(S)

0 2000 4000
SCALE: 1:100

US Army Corps of Engineers
Japan District ®

FOR REVIEW ONLY

THESE DOCUMENTS ARE FOR CONCEPT DESIGN AND NOT INTENDED FOR CONSTRUCTION, BIDDING OR PERMIT PURPOSES. THEY WERE PREPARED BY, OR UNDER SUPERVISION OF:

CHRIS A. ZABRANSKY
NAME

152497 — REGISTRATION #
09/04/2025 — DATE

TEXAS REGISTERED ENGINEERING FIRM F-2966

MARK	DESCRIPTION	DATE

ISSUE DATE: 09/04/2025
SOLICITATION NO.:
CONTRACT NO.:
DRAWING CODE:

DESIGNED BY: C. ZABRANSKY
DRAWN BY: C. ZABRANSKY
CHECKED BY: C. KOHRMANN
SUBMITTED BY: A. GUERRA
SIZE: ISO A1
FILE NAME: E-103

US ARMY CORPS OF ENGINEERS
JAPAN ENGINEER DISTRICT
OKINAWA, JAPAN

Jacobs
JACOBS GOVERNMENT SERVICES COMPANY
777 MAIN STREET, FORT WORTH, TX 76102
USA

FY25 REPAIR HVAC WIDEBAND SATCOM OPS B100
CAMP BUCKNER COMMUNICATIONS ANNEX
OKINAWA, JAPAN
PROJECT NUMBER:D3449305

PARTIAL POWER ROOF PLAN - AREA A

SHEET ID
E-103

FILE PATH: C:\Users\zabranca\Documents\D3449305-E-3D_chris.zabransky.rvt
PLOT DATE: 8/29/2025 9:17:10 AM PLOTTED BY: PLOT SCALE: 1 : 100

BACKCHECK SUBMITTAL DESIGN

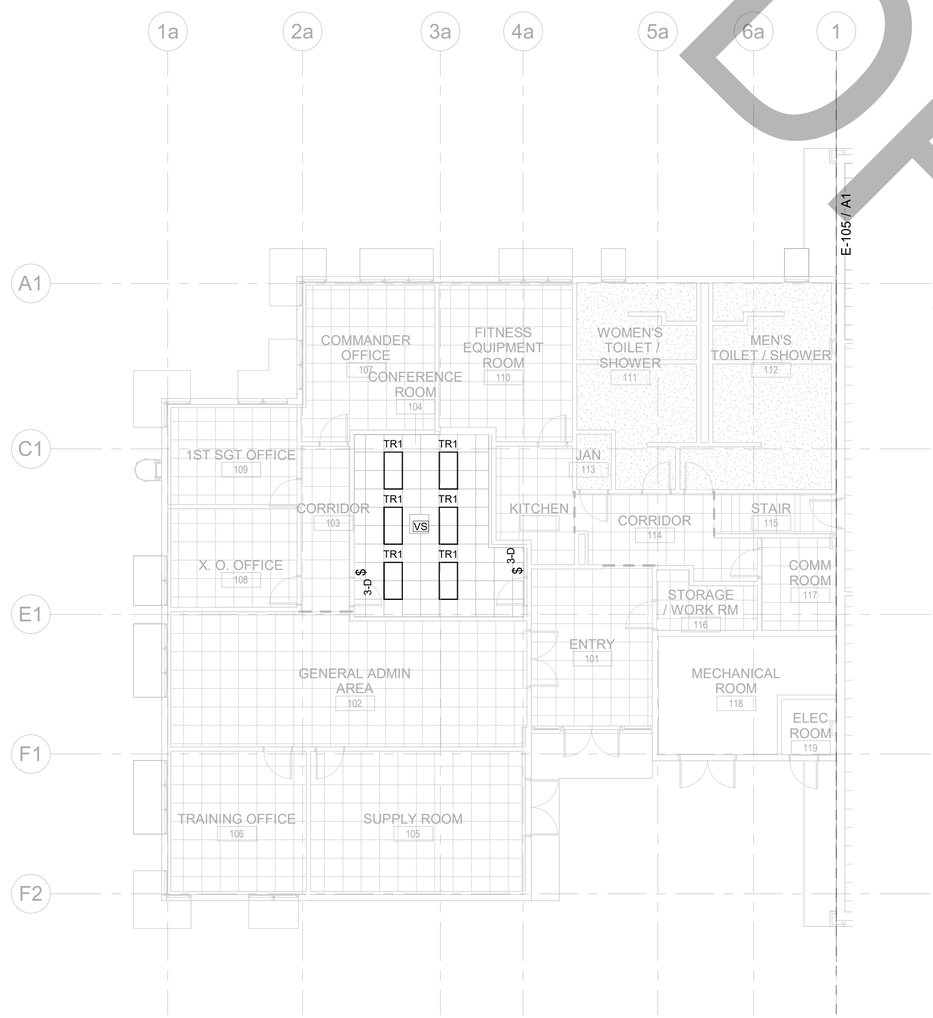

A1 PARTIAL LIGHTING PLAN - AREA A
1 : 100

GENERAL NOTES - LIGHTING

A	REFER TO SHEET E-001 FOR GENERAL NOTES AND SYMBOL LEGEND.
B	CIRCUIT NEW LIGHT FIXTURES USING NEW WIRES FROM THE FIXTURES NEAREST JUNCTION BOX. ENSURE CONTINUITY OF THE EXISTING CIRCUIT AND THE EXISTING LIGHTS TO REMAIN STILL WORK PROPERLY, VERIFY EXISTING CONDITIONS IN FIELD.

KEY PLAN

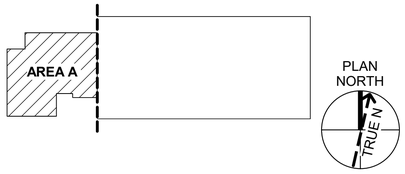

GRAPHIC SCALE(S)

0 2000 4000
SCALE: 1:100

US Army Corps of Engineers
Japan District ®

FOR REVIEW ONLY

THESE DOCUMENTS ARE FOR CONCEPT DESIGN AND NOT INTENDED FOR CONSTRUCTION, BIDDING OR PERMIT PURPOSES. THEY WERE PREPARED BY, OR UNDER SUPERVISION OF:

CHRIS A. ZABRANSKY
NAME

152497 — REGISTRATION #
09/04/2025 — DATE

TEXAS REGISTERED ENGINEERING FIRM F-2966

MARK	DESCRIPTION	DATE

DESIGNED BY: C. ZABRANSKY
DRAWN BY: C. ZABRANSKY
CHECKED BY: C. KOHRMANN
SUBMITTED BY: A. GUERRA
SIZE: ISO A1
FILE NAME: E-104
ISSUE DATE: 09/04/2025
SOLICITATION NO.: -
CONTRACT NO.: -
DRAWING CODE:

US ARMY CORPS OF ENGINEERS
JAPAN ENGINEER DISTRICT
OKINAWA, JAPAN

Jacobs
JACOBS GOVERNMENT SERVICES COMPANY
777 MAIN STREET / FORT WORTH, TX 76102
USA

FY25 REPAIR HVAC WIDEBAND SATCOM OPS B100
CAMP BUCKNER COMMUNICATIONS ANNEX
OKINAWA, JAPAN
PROJECT NUMBER:D3449305

PARTIAL LIGHTING PLAN - AREA A

SHEET ID
E-104

DRAFT

FILE PATH: C:\Users\zabranca\Documents\D3449305-E-3D_chris.zabransky.rvt
PLOT DATE: 8/29/2025 9:17:10 AM PLOTTED BY: PLOT SCALE: 1 : 100

BACKCHECK SUBMITTAL DESIGN

GENERAL NOTES - LIGHTING

A	REFER TO SHEET E-001 FOR GENERAL NOTES AND SYMBOL LEGEND.
B	CIRCUIT NEW LIGHT FIXTURES USING NEW WIRES FROM THE FIXTURES NEAREST JUNCTION BOX. ENSURE CONTINUITY OF THE EXISTING CIRCUIT AND THE EXISTING LIGHTS TO REMAIN STILL WORK PROPERLY, VERIFY EXISTING CONDITIONS IN FIELD.

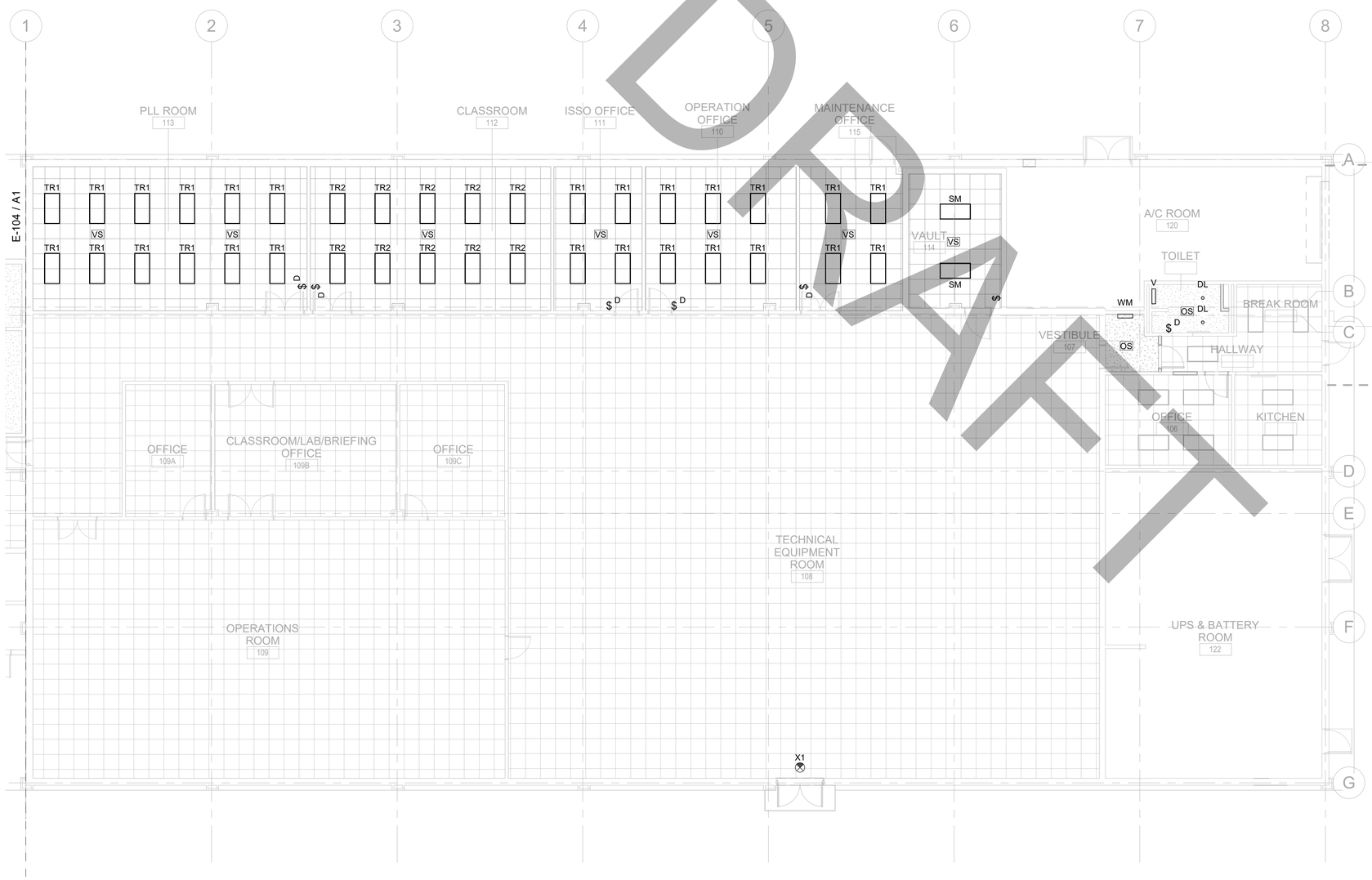

A1 PARTIAL LIGHTING PLAN - AREA B

1 : 100

KEY PLAN

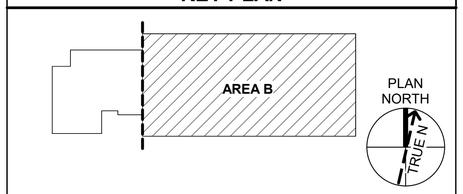

GRAPHIC SCALE(S)

0 2000 4000

SCALE: 1:100

US Army Corps of Engineers
Japan District ®

FOR REVIEW ONLY

THESE DOCUMENTS ARE FOR CONCEPT DESIGN AND NOT INTENDED FOR CONSTRUCTION, BIDDING OR PERMIT PURPOSES. THEY WERE PREPARED BY, OR UNDER SUPERVISION OF:

CHRIS A. ZABRANSKY
NAME

152497 — REGISTRATION #
09/04/2025 — DATE

TEXAS REGISTERED ENGINEERING FIRM F-2966

MARK	DESCRIPTION	DATE

ISSUE DATE: 09/04/2025
SOLICITATION NO.:
CONTRACT NO.:
DRAWING CODE:

DESIGNED BY: C. ZABRANSKY
DRAWN BY: C. ZABRANSKY
CHECKED BY: C. KOHRMANN
SUBMITTED BY: A. GUERRA
SIZE: ISO A1
FILE NAME: E-105

US ARMY CORPS OF ENGINEERS
JAPAN ENGINEER DISTRICT
OKINAWA, JAPAN

Jacobs
JACOBS GOVERNMENT SERVICES COMPANY
777 MAIN STREET | FORT WORTH, TX 76102
USA

FY25 REPAIR HVAC WIDEBAND SATCOM OPS B100
CAMP BUCKNER COMMUNICATIONS ANNEX
OKINAWA, JAPAN
PROJECT NUMBER:D3449305

PARTIAL LIGHTING PLAN - AREA B

SHEET ID

E-105

DRAFT

FILE PATH: C:\Users\zabranca\Documents\D3449305-E-3D_chris.zabransky.rvt
PLOT DATE: 8/29/2025 9:17:11 AM PLOTTED BY: PLOT SCALE: 1 : 100

BACKCHECK SUBMITTAL DESIGN

KEYNOTES

127	BOND FENCE TO GROUND RING USING 14MM2 CU.

GENERAL NOTES - GROUNDING

A	THE DESIGN IS INTENDED TO SHOW THE BASIC GROUNDING ELECTRODE SYSTEM. VERIFY THE DIMENSIONS AND SITE CONDITIONS.
B	BOND ALL METALLIC UNDERGROUND PIPING ENTERING THE STRUCTURE TO THE GROUND RING AT ITS NEAREST POINT.
C	ALL BURIED CONNECTIONS MUST BE EXOTHERMIC WELDS.
D	GROUND METALLIC PIPES AT TWO LOCATIONS USING AN APPROVED PIPE CLAMP WITHIN 1.5M OF SERVICE ENTRANCE.
E	THOROUGHLY CLEAN AND COAT ALL CONTACT SURFACES AND APPLY TO CONDUCTOR AND LUG UL-LISTED COPPER BASED CONDUCTIVE GREASE RATED FOR GROUNDING AND PROTECTION OF COPPER AND STEEL SURFACE.
F	PROVED MAGNETIC TAPE OVER ALL BURIED GROUND CONDUCTORS.

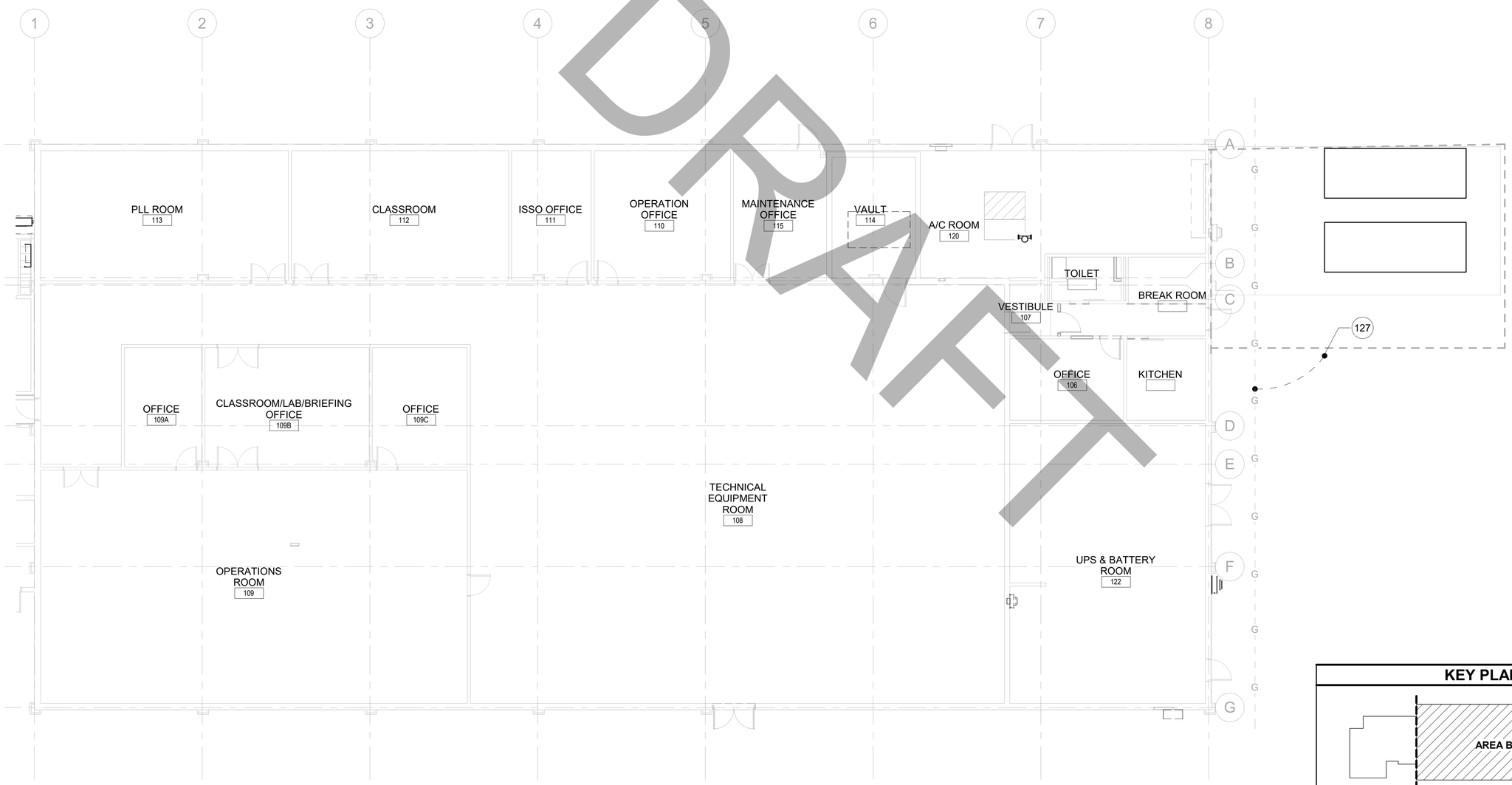

A1 PARTIAL GROUNDING PLAN - AREA B
1 : 100

KEY PLAN

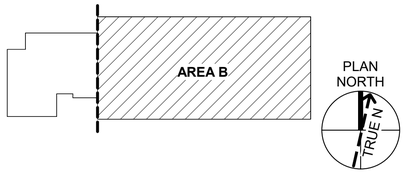

GRAPHIC SCALE(S)

0 2000 4000
SCALE: 1:100

US Army Corps of Engineers
Japan District ®

FOR REVIEW ONLY

THESE DOCUMENTS ARE FOR CONCEPT DESIGN AND NOT INTENDED FOR CONSTRUCTION, BIDDING OR PERMIT PURPOSES. THEY WERE PREPARED BY, OR UNDER SUPERVISION OF:

CHRIS A. ZABRANSKY
NAME

152497 — REGISTRATION #
09/04/2025 — DATE

TEXAS REGISTERED ENGINEERING FIRM F-2966

MARK	DESCRIPTION	DATE

ISSUE DATE: 09/04/2025
SOLICITATION NO.:
CONTRACT NO.:
DRAWING CODE:

DESIGNED BY: C. ZABRANSKY
DRAWN BY: D. ZABRANSKY
CHECKED BY: C. KOHRMANN
SUBMITTED BY: A. GUERRA
SIZE: ISO A1
FILE NAME: E-106

US ARMY CORPS OF ENGINEERS
JAPAN ENGINEER DISTRICT
OKINAWA, JAPAN

Jacobs
JACOBS GOVERNMENT SERVICES COMPANY
777 MAIN STREET, FORT WORTH, TX 76102
USA

FY25 REPAIR HVAC WIDEBAND SATCOM OPS B100
CAMP BUCKNER COMMUNICATIONS ANNEX
OKINAWA, JAPAN
PROJECT NUMBER:D3449305

PARTIAL GROUNDING PLAN - AREA B

SHEET ID
E-106

E E-106-

FILE PATH: C:\Users\zabranca\Documents\D3449305-E-3D_chris.zabransky.rvt
PLOT DATE: 8/29/2025 9:17:12 AM PLOTTED BY: PLOT SCALE: 1 : 100

BACKCHECK SUBMITTAL DESIGN

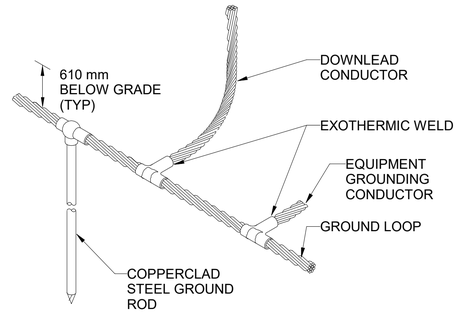

F4 GROUNDING - GROUND LOOP BONDING

NTS

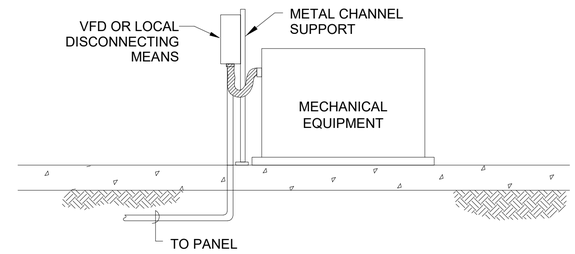

F7 POWER - VFD/DISCONNECT INSTALLATION

NTS

DRAFT

NOTES:
1. THESE MOUNTING HEIGHTS APPLY UNLESS SPECIFIED OR NOTED OTHERWISE ON DRAWINGS.
2. ADJUST MOUNTING HEIGHTS IN CMU CONSTRUCTION AS REQUIRED TO AVOID CUTTING MORE THAN ONE BLOCK.
3. COORDINATE DEVICE LOCATIONS WITH MILLWORK.
4. OUTLET DEVICES SHALL NOT BE INSTALLED BACK TO BACK; MINIMUM 50mm OFFSET.

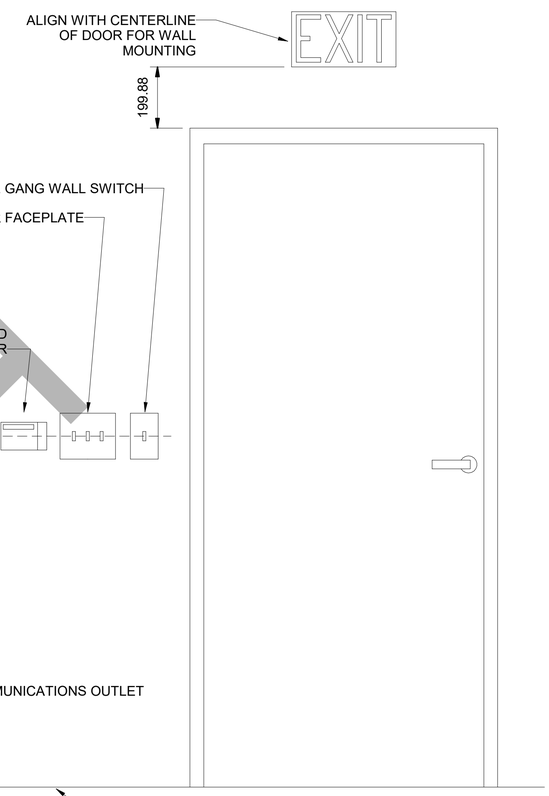

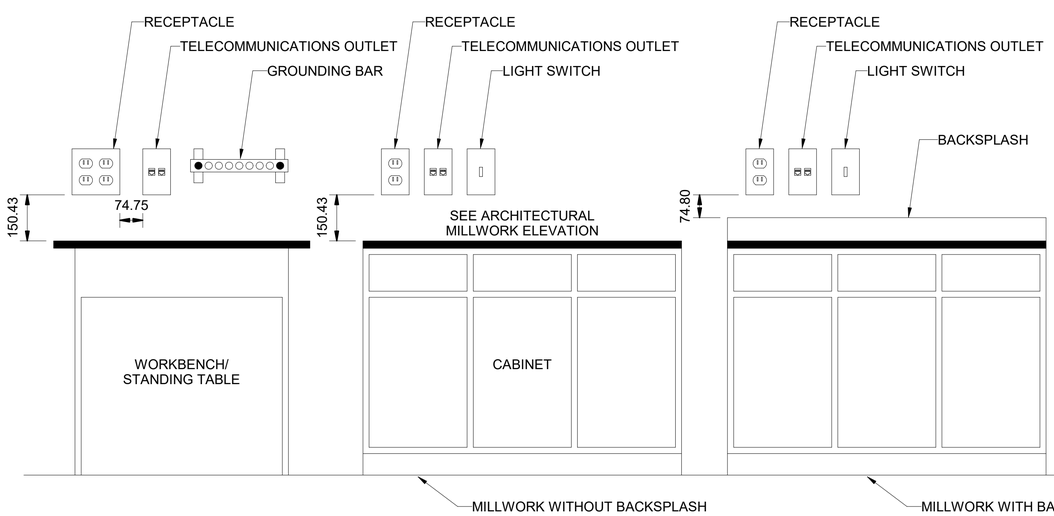

A1 POWER - ELECTRICAL DEVICE MOUNTING HEIGHTS

NTS

US Army Corps of Engineers
Japan District ®

FOR REVIEW ONLY

THESE DOCUMENTS ARE FOR CONCEPT DESIGN AND NOT INTENDED FOR CONSTRUCTION, BIDDING OR PERMIT PURPOSES. THEY WERE PREPARED BY, OR UNDER SUPERVISION OF:

CHRIS A. ZABRANSKY
NAME

152497 — REGISTRATION #
09/04/2025 — DATE

TEXAS REGISTERED ENGINEERING FIRM F-2966

MARK	DESCRIPTION	DATE

ISSUE DATE: 09/04/2025
SOLICITATION NO.:
CONTRACT NO.:
DRAWING CODE:

DESIGNED BY: C. ZABRANSKY
DRAWN BY: C. ZABRANSKY
CHECKED BY: C. KOHRMANN
SUBMITTED BY: A. GUERRA
SIZE: ISO A1
FILE NAME: E-501

US ARMY CORPS OF ENGINEERS
JAPAN ENGINEER DISTRICT
OKINAWA, JAPAN

Jacobs
JACOBS GOVERNMENT SERVICES COMPANY
777 MAIN STREET, FT. WORTH, TX 76102
USA

FY25 REPAIR HVAC WIDEBAND SATCOM OPS B100
CAMP BUCKNER COMMUNICATIONS ANNEX
OKINAWA, JAPAN
PROJECT NUMBER:D3449305

DETAILS

SHEET ID

E-501

E E-501-

FILE PATH: C:\Users\zabranca\Documents\D3449305-E-3D_chris.zabransky.rvt
PLOT DATE: 8/29/2025 9:17:12 AM PLOTTED BY: PLOT SCALE: As indicated

BACKCHECK SUBMITTAL DESIGN

SETUP A: DIELECTRIC

SECURITY INTERFACE	
LOWER	HIGHER
UNC	TI, SCI, MCV
TI	SCI, MCV

NOTE: CONTRACTOR MAY SELECT EITHER SETUP A OR SETUP B. REFER TO SECURITY PLANS FOR LEVEL OF PROTECTION.

LINK SEAL PRODUCT TO BE UTILIZED ON SECURE A WALL AND STANDARD PENETRATION SEAL TO BE UTUILIZED ON ADMIN WALL

SETUP B: GROUNDED

A1 SECURE TO UNSECURE BOUNDARY CONDUIT PIPE PENETRATION

NTS

DRAFT

US Army Corps of Engineers
Japan District ®

FOR REVIEW ONLY

THESE DOCUMENTS ARE FOR CONCEPT DESIGN AND NOT INTENDED FOR CONSTRUCTION, BIDDING OR PERMIT PURPOSES. THEY WERE PREPARED BY, OR UNDER SUPERVISION OF:

CHRIS A. ZABRANSKY
NAME

152497 — REGISTRATION #
09/04/2025 — DATE

TEXAS REGISTERED ENGINEERING FIRM F-2966

MARK	DESCRIPTION	DATE

DESIGNED BY: C. ZABRANSKY
DRAWN BY: C. ZABRANSKY
CHECKED BY: C. KOHRMANN
SUBMITTED BY: A. GUERRA
SIZE: ISO A1
FILE NAME: E-502
ISSUE DATE: 09/04/2025
SOLICITATION NO.: -
CONTRACT NO.: -
DRAWING CODE: -

US ARMY CORPS OF ENGINEERS
JAPAN ENGINEER DISTRICT
OKINAWA, JAPAN

Jacobs
JACOBS GOVERNMENT SERVICES COMPANY
777 MAIN STREET / FORT WORTH, TX 76102
USA

FY25 REPAIR HVAC WIDEBAND SATCOM OPS B100
CAMP BUCKNER COMMUNICATIONS ANNEX
OKINAWA, JAPAN
PROJECT NUMBER:D3449305

DETAILS

SHEET ID

E-502

E E-502-

FILE PATH: C:\Users\zabranca\Documents\D3449305-E-3D_chris.zabransky.rvt
PLOT DATE: 8/29/2025 9:17:12 AM PLOTTED BY: PLOT SCALE: NTS

BACKCHECK SUBMITTAL DESIGN

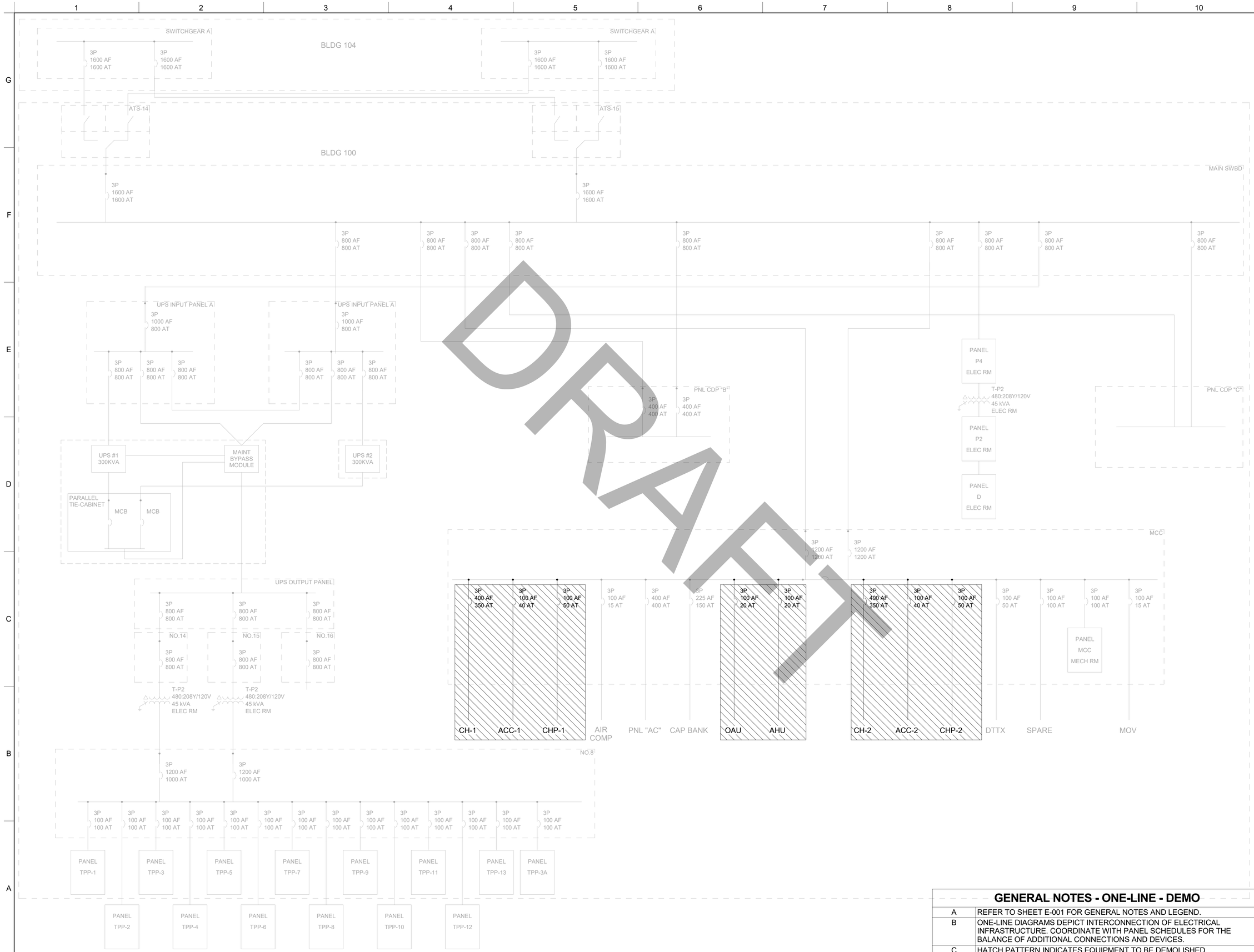

DRAFT

GENERAL NOTES - ONE-LINE - DEMO

A	REFER TO SHEET E-001 FOR GENERAL NOTES AND LEGEND.
B	ONE-LINE DIAGRAMS DEPICT INTERCONNECTION OF ELECTRICAL INFRASTRUCTURE. COORDINATE WITH PANEL SCHEDULES FOR THE BALANCE OF ADDITIONAL CONNECTIONS AND DEVICES.
C	HATCH PATTERN INDICATES EQUIPMENT TO BE DEMOLISHED.

US Army Corps of Engineers
Japan District ®

FOR REVIEW ONLY

THESE DOCUMENTS ARE FOR CONCEPT DESIGN AND NOT INTENDED FOR CONSTRUCTION, BIDDING OR PERMIT PURPOSES. THEY WERE PREPARED BY, OR UNDER SUPERVISION OF:

CHRIS A. ZABRANSKY
NAME

152497 — REGISTRATION #
09/04/2025 — DATE

TEXAS REGISTERED ENGINEERING FIRM F-2966

MARK	DESCRIPTION	DATE

ISSUE DATE: 09/04/2025
SOLICITATION NO.:
CONTRACT NO.:
DRAWING CODE:

DESIGNED BY: C. ZABRANSKY
DRAWN BY: C. ZABRANSKY
CHECKED BY: C. KOHRMANN
SUBMITTED BY: A. GUERRA
SIZE: ISO A1
FILE NAME: E-601

US ARMY CORPS OF ENGINEERS
JAPAN ENGINEER DISTRICT
OKINAWA, JAPAN

Jacobs
JACOBS GOVERNMENT SERVICES COMPANY
777 MAIN STREET / FORT WORTH, TX 76102
USA

FY25 REPAIR HVAC WIDEBAND SATCOM OPS B100
CAMP BUCKNER COMMUNICATIONS ANNEX
OKINAWA, JAPAN
PROJECT NUMBER:D3449305

DEMOLITION ONE-LINE DIAGRAM

SHEET ID
E-601

E E-601-

FILE PATH: C:\Users\zabranca\Documents\D3449305-E-3D_chris.zabransky.rvt
PLOT DATE: 8/29/2025 9:17:12 AM PLOTTED BY: PLOT SCALE: 1 : 50

BACKCHECK SUBMITTAL DESIGN

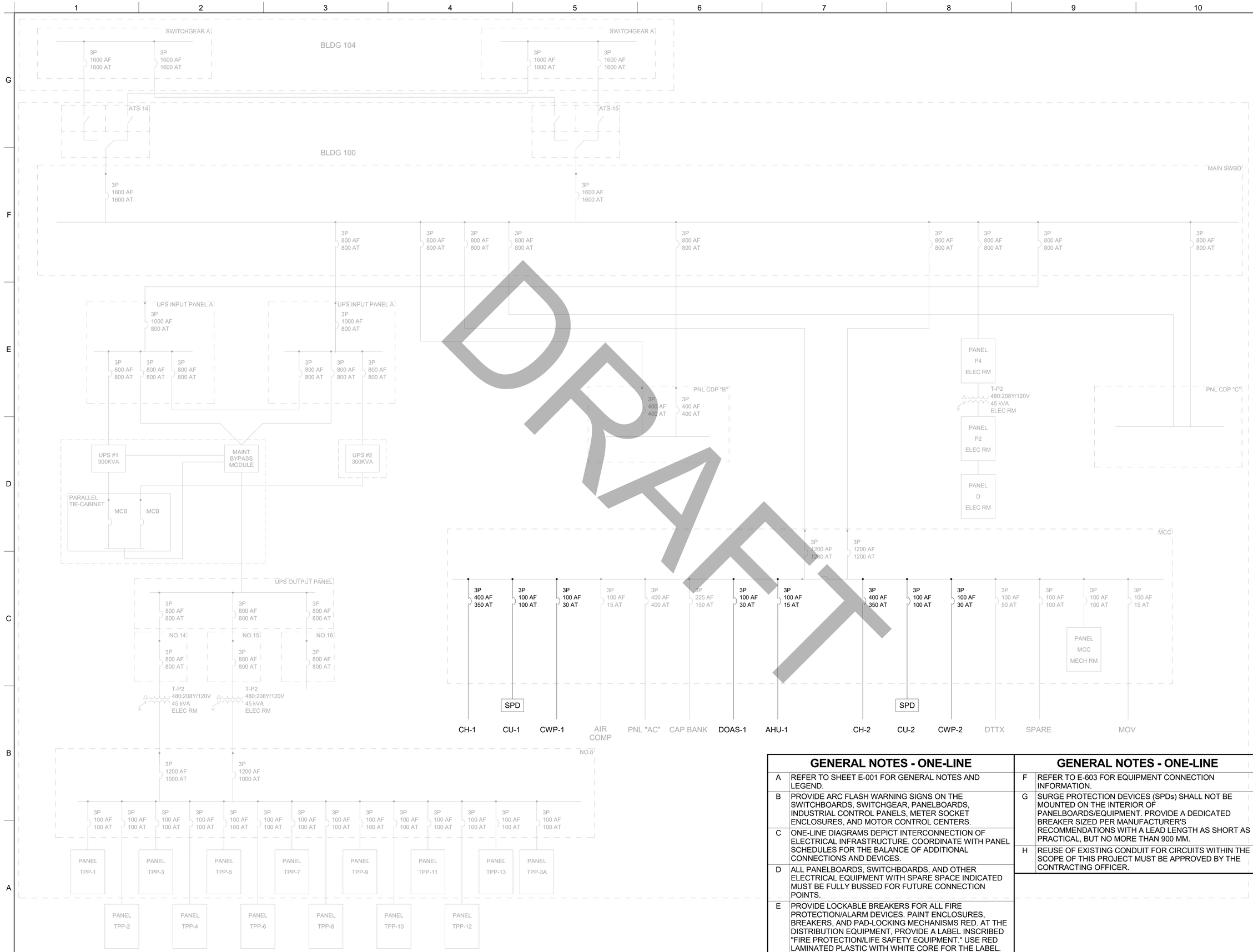

DRAFT

GENERAL NOTES - ONE-LINE

A	REFER TO SHEET E-001 FOR GENERAL NOTES AND LEGEND.
B	PROVIDE ARC FLASH WARNING SIGNS ON THE SWITCHBOARDS, SWITCHGEAR, PANELBOARDS, INDUSTRIAL CONTROL PANELS, METER SOCKET ENCLOSURES, AND MOTOR CONTROL CENTERS.
C	ONE-LINE DIAGRAMS DEPICT INTERCONNECTION OF ELECTRICAL INFRASTRUCTURE. COORDINATE WITH PANEL SCHEDULES FOR THE BALANCE OF ADDITIONAL CONNECTIONS AND DEVICES.
D	ALL PANELBOARDS, SWITCHBOARDS, AND OTHER ELECTRICAL EQUIPMENT WITH SPARE SPACE INDICATED MUST BE FULLY BUSSED FOR FUTURE CONNECTION POINTS.
E	PROVIDE LOCKABLE BREAKERS FOR ALL FIRE PROTECTION/ALARM DEVICES. PAINT ENCLOSURES, BREAKERS, AND PAD-LOCKING MECHANISMS RED. AT THE DISTRIBUTION EQUIPMENT, PROVIDE A LABEL INSCRIBED "FIRE PROTECTION/LIFE SAFETY EQUIPMENT." USE RED LAMINATED PLASTIC WITH WHITE CORE FOR THE LABEL.

GENERAL NOTES - ONE-LINE

F	REFER TO E-603 FOR EQUIPMENT CONNECTION INFORMATION.
G	SURGE PROTECTION DEVICES (SPDs) SHALL NOT BE MOUNTED ON THE INTERIOR OF PANELBOARDS/EQUIPMENT. PROVIDE A DEDICATED BREAKER SIZED PER MANUFACTURER'S RECOMMENDATIONS WITH A LEAD LENGTH AS SHORT AS PRACTICAL, BUT NO MORE THAN 900 MM.
H	REUSE OF EXISTING CONDUIT FOR CIRCUITS WITHIN THE SCOPE OF THIS PROJECT MUST BE APPROVED BY THE CONTRACTING OFFICER.

US Army Corps of Engineers
Japan District ®

FOR REVIEW ONLY

THESE DOCUMENTS ARE FOR CONCEPT DESIGN AND NOT INTENDED FOR CONSTRUCTION, BIDDING OR PERMIT PURPOSES. THEY WERE PREPARED BY, OR UNDER SUPERVISION OF:

CHRIS A. ZABRANSKY
NAME

152497 — REGISTRATION #
09/04/2025 — DATE

TEXAS REGISTERED ENGINEERING FIRM F-2966

MARK	DESCRIPTION	DATE

ISSUE DATE: 09/04/2025
SOLICITATION NO.:
CONTRACT NO.:
DRAWING CODE:

DESIGNED BY: C. ZABRANSKY
DRAWN BY: C. ZABRANSKY
CHECKED BY: C. KOHRMANN
SUBMITTED BY: A. GUERRA
SIZE: ISO A1
FILE NAME: E-602

US ARMY CORPS OF ENGINEERS
JAPAN ENGINEER DISTRICT
OKINAWA, JAPAN

Jacobs
JACOBS GOVERNMENT SERVICES COMPANY
777 MAIN STREET / FORT WORTH, TX 76102 USA

FY25 REPAIR HVAC WIDEBAND SATCOM OPS B100
CAMP BUCKNER COMMUNICATIONS ANNEX
OKINAWA, JAPAN
PROJECT NUMBER:D3449305

ONE-LINE DIAGRAM

SHEET ID
E-602

E E-602-

FILE PATH: C:\Users\zabranca\Documents\D3449305-E-3D_chris.zabransky.rvt
PLOT DATE: 8/29/2025 9:17:13 AM PLOTTED BY: PLOT SCALE: 1 : 50

BACKCHECK SUBMITTAL DESIGN

EQUIPMENT CONNECTIONS

ID	EQUIPMENT	VOLT	POLES	LOAD	FLA	MCA	OCPD RATING	D/S RATING	PANEL	CIRCUIT	WIRE/CONDUIT
AHU-1	AIR HANDLING UNIT	480 V	3	6252 VA	7.5 A	9.4 A	15 A	INTEGRAL DISCONNECT	(E) MCC	2,4,6	3-5.5MM, 1-5.5MM G, G22 C
AHU-2	AIR HANDLING UNIT	480 V	3	3326 VA	4.0 A	5.0 A	15 A	INTEGRAL DISCONNECT	(E) P4	2,4,6	3-5.5MM, 1-5.5MM G, G22 C
CH-1	AIR COOLED CHILLER	480 V	3	193746 VA	233.0 A	291.3 A	400 A	600/3P/400A	(E) MCC	14,16,18	3-150MM, 1-38MM G, G70 C
CH-2	AIR COOLED CHILLER	480 V	3	193746 VA	233.0 A	291.3 A	400 A	600/3P/400A	(E) MCC	13,15,17	3-150MM, 1-38MM G, G70 C
CRAC-1	COMPUTER ROOM AIR CONDITIONING UNIT	480 V	3	8513 VA	10.2 A	12.8 A	20 A	600/3P/30A	(E) AC PANEL	1,3,5	3-5.5MM, 1-5.5MM G, G22 C
CRAC-2	COMPUTER ROOM AIR CONDITIONING UNIT	480 V	3	8513 VA	10.2 A	12.8 A	20 A	600/3P/30A	(E) AC PANEL	2,4,6	3-5.5MM, 1-5.5MM G, G22 C
CRAC-3	COMPUTER ROOM AIR CONDITIONING UNIT	480 V	3	8513 VA	10.2 A	12.8 A	20 A	600/3P/30A	(E) AC PANEL	7,9,11	3-5.5MM, 1-5.5MM G, G22 C
CRAC-4	COMPUTER ROOM AIR CONDITIONING UNIT	480 V	3	8513 VA	10.2 A	12.8 A	20 A	600/3P/30A	(E) AC PANEL	8,10,12	3-5.5MM, 1-5.5MM G, G22 C
CRAC-5	COMPUTER ROOM AIR CONDITIONING UNIT	480 V	3	8513 VA	10.2 A	12.8 A	20 A	600/3P/30A	(E) AC PANEL	13,15,17	3-5.5MM, 1-5.5MM G, G22 C
CRAC-6	COMPUTER ROOM AIR CONDITIONING UNIT	480 V	3	8513 VA	10.2 A	12.8 A	20 A	600/3P/30A	(E) AC PANEL	14,16,18	3-5.5MM, 1-5.5MM G, G22 C
CRAC-7	COMPUTER ROOM AIR CONDITIONING UNIT	480 V	3	8513 VA	10.2 A	12.8 A	20 A	600/3P/30A	(E) AC PANEL	19,21,23	3-5.5MM, 1-5.5MM G, G22 C
CRAC-8	COMPUTER ROOM AIR CONDITIONING UNIT	480 V	3	8513 VA	10.2 A	12.8 A	20 A	600/3P/30A	(E) AC PANEL	20,22,24	3-5.5MM, 1-5.5MM G, G22 C
CU-1	CONDENSING UNIT	480 V	3	44296 VA	53.3 A	66.6 A	100 A	600/3P/100A	(E) MCC	8,10,12	3-22MM, 1-8MM, G28 C
CU-2	CONDENSING UNIT	480 V	3	44296 VA	53.3 A	66.6 A	100 A	600/3P/100A	(E) MCC	7,9,11	3-22MM, 1-8MM, G28 C
CU-4	CONDENSING UNIT	208 V	1	2367 VA	11.4 A	14.2 A	20 A	240/1P/30A	(E) P2	24,26	2-5.5MM, 1-5.5MM G, G22 C
CU-5	CONDENSING UNIT	480 V	3	12637 VA	15.2 A	19.0 A	25 A	600/3P/30A	(E) P4	14,16,18	3-5.5MM, 1-5.5MM G, G22 C
CU-6	CONDENSING UNIT	480 V	3	3592 VA	4.3 A	5.4 A	15 A	600/3P/30A	(E) P4	13,15,17	2-5.5MM, 1-5.5MM G, G22 C
CU-7	CONDENSING UNIT	208 V	1	1522 VA	7.3 A	9.2 A	15 A	240/1P/30A	(E) P2	31,33	2-5.5MM, 1-5.5MM G, G22 C
CU-8	CONDENSING UNIT	208 V	1	1281 VA	6.2 A	7.7 A	15 A	240/1P/30A	(E) P2	28,30	2-5.5MM, 1-5.5MM G, G22 C
CU-9	CONDENSING UNIT	208 V	1	2367 VA	11.4 A	14.2 A	20 A	240/1P/30A	(E) P2	35,37	2-5.5MM, 1-5.5MM G, G22 C
CWP-1	CHILLED WATER PUMP	480 V	3	17459 VA	21.0 A	26.3 A	30 A	600/3P/30A	(E) MCC	19,21,23	3-8MM, 1-8MM G, G22 C
CWP-2	CHILLED WATER PUMP	480 V	3	17459 VA	21.0 A	26.3 A	30 A	600/3P/30A	(E) MCC	20,22,24	3-8MM, 1-8MM G, G22 C
DOAS-1	DEDICATED OUTSIDE AIRHANDLING UNIT	480 V	3	16874 VA	20.3 A	25.4 A	30 A	600/3P/30A	(E) MCC	25,27,29	3-8MM, 1-8MM G, G22 C
DOAS-2	DEDICATED OUTSIDE AIRHANDLING UNIT	480 V	3	4295 VA	5.2 A	6.5 A	20 A	600/3P/30A	(E) P4	7,9,11	3-5.5MM, 1-5.5MM G, G22 C
EF-1	EXHAUST FAN	120 V	1	9 VA	0.1 A	0.1 A	15 A	MOTOR RATED SWITCH	(E) P2	20	2-5.5MM, 1-5.5MM G, G22 C
EF-2	EXHAUST FAN	120 V	1	336 VA	2.8 A	3.5 A	15 A	MOTOR RATED SWITCH	(E) P2	9	2-5.5MM, 1-5.5MM G, G22 C
EF-3	EXHAUST FAN	120 V	1	154 VA	1.3 A	1.6 A	15 A	MOTOR RATED SWITCH	(E) P2	11	2-5.5MM, 1-5.5MM G, G22 C
EF-4	EXHAUST FAN	120 V	1	154 VA	1.3 A	1.6 A	15 A	MOTOR RATED SWITCH	(E) P2	23	2-5.5MM, 1-5.5MM G, G22 C
EF-5	EXHAUST FAN	120 V	1	19 VA	0.2 A	0.2 A	15 A	MOTOR RATED SWITCH	(E) MCC-PANEL	5	2-5.5MM, 1-5.5MM G, G22 C
EF-7	EXHAUST FAN	120 V	1	864 VA	7.2 A	9.0 A	15 A	MOTOR RATED SWITCH	(E) MCC-PANEL	1	2-5.5MM, 1-5.5MM G, G22 C
FCU-1	FAN COIL UNIT	208 V	1	2367 VA	11.4 A	14.2 A	20 A	240/1P/30A	FED FROM CU-3	1,3	2-5.5MM, 1-5.5MM G, G22 C
FCU-2	FAN COIL UNIT	208 V	1	2367 VA	11.4 A	14.2 A	20 A	240/1P/30A	FED FROM CU-4	1,3	2-5.5MM, 1-5.5MM G, G22 C
FCU-3	FAN COIL UNIT	208 V	1	1522 VA	7.3 A	9.2 A	20 A	240/1P/30A	FED FROM CU-7	1,3	2-5.5MM, 1-5.5MM G, G22 C
FCU-4	FAN COIL UNIT	208 V	1	1281 VA	6.2 A	7.7 A	20 A	240/1P/30A	FED FROM CU-8	1,3	2-5.5MM, 1-5.5MM G, G22 C
FCU-5	FAN COIL UNIT	208 V	1	2367 VA	11.4 A	14.2 A	20 A	240/1P/30A	FED FROM CU-9	1,3	2-5.5MM, 1-5.5MM G, G22 C

DRAFT

US Army Corps of Engineers
Japan District ®

FOR REVIEW ONLY

THESE DOCUMENTS ARE FOR CONCEPT DESIGN AND NOT INTENDED FOR CONSTRUCTION, BIDDING OR PERMIT PURPOSES. THEY WERE PREPARED BY, OR UNDER SUPERVISION OF:

CHRIS A. ZABRANSKY
NAME

152497 — REGISTRATION #
09/04/2025 — DATE

TEXAS REGISTERED ENGINEERING FIRM F-2966

MARK	DESCRIPTION	DATE

DESIGNED BY: C. ZABRANSKY
DRAWN BY: C. ZABRANSKY
CHECKED BY: C. KOHRMANN
SUBMITTED BY: A. GUERRA
SIZE: ISO A1
FILE NAME: E-603
ISSUE DATE: 09/04/2025
SOLICITATION NO.: -
CONTRACT NO.: -
DRAWING CODE:

US ARMY CORPS OF ENGINEERS
JAPAN ENGINEER DISTRICT
OKINAWA, JAPAN

Jacobs
JACOBS GOVERNMENT SERVICES COMPANY
777 MAIN STREET / FORT WORTH, TX 76102
USA

FY25 REPAIR HVAC WIDEBAND SATCOM OPS B100
CAMP BUCKNER COMMUNICATIONS ANNEX
OKINAWA, JAPAN
PROJECT NUMBER:D3449305

EQUIPMENT SCHEDULE

SHEET ID
E-603

FILE PATH: C:\Users\zabranca\Documents\D3449305-E-3D_chris.zabransky.rvt
PLOT DATE: 8/29/2025 9:17:14 AM PLOTTED BY: PLOT SCALE:

BACKCHECK SUBMITTAL DESIGN

BRANCH PANEL: (E) MCC

LOCATION: A/C ROOM 120
SUPPLIED FROM:
MOUNTING: Recessed
ENCLOSURE: Type 1

VOLTAGE: 480/277 Wye
PHASES: 3
WIRES: 4
FREQUENCY: 60 HZ

A.I.C. RATING: 65000
MAINS TYPE: MCB
MAINS RATING: 1200 A
MCB RATING: 1200 A

NOTES:

CKT	DESCRIPTION	TRIP	L	P	A		B		C		P	L	TRIP	DESCRIPTION	CKT
1					22701 VA	2084 VA									2
3	(E) AC PANEL	100 A		3			22701 VA	2084 VA			3		15 A	AHU-1	4
5									22701 VA	2084 VA					6
7					14765 VA	14765 VA									8
9	CU-2	100 A		3			14765 VA	14765 VA			3		100 A	CU-1	10
11									14765 VA	14765 VA					12
13					64582 VA	64582 VA									14
15	CH-2	400 A		3			64582 VA	64582 VA			3		400 A	CH-1	16
17									64582 VA	64582 VA					18
19					5820 VA	5820 VA									20
21	CWP-1	30 A		3			5820 VA	5820 VA			3		30 A	CWP-2	22
23									5820 VA	5820 VA					24
25					5625 VA	50 VA									26
27	DOAS-1	30 A		3			5625 VA	50 VA			3		15 A	(E) AIR COMP	28
29									5625 VA	50 VA					30
31						10000 VA									32
33								10000 VA			3		50 A	(E) DTTX	34
35										10000 VA					36
37					500 VA	30000 VA									38
39	(E) MOV	15 A		3			500 VA	30000 VA			3		150 A	(E) CAP BANK	40
41									500 VA	30000 VA					42
		TOTAL LOAD:			241294 VA		241294 VA		241294 VA						
		TOTAL AMPS:			871 A		871 A		871 A						

LEGEND:

* = GFI BREAKER, ** = AFCI BREAKER, S = SHUNT TRIP BREAKER, F = PAINTED RED, L = LOCKABLE IN OPEN POSITION REQUIRED

LOAD CLASSIFICATION	CONNECTED LOAD	DEMAND FACTOR	ESTIMATED DEMAND	PANEL TOTALS	
Motor	602232 VA	85.00%	511897 VA		
Spare	121650 VA	100.00%	121650 VA	**TOTAL CONNECTED:**	723882 VA
				TOTAL DEMAND:	633547 VA
				TOTAL CONNECTED:	871 A
				TOTAL DEMAND:	762 A

NOTES:

BRANCH PANEL: (E) AC PANEL

LOCATION: TECHNICAL EQUIPMENT ROOM 108
SUPPLIED FROM: (E) MCC
MOUNTING: Surface
ENCLOSURE: Type 1

VOLTAGE: 480/277 Wye
PHASES: 3
WIRES: 4
FREQUENCY: 60 HZ

A.I.C. RATING: 25000
MAINS TYPE: MCB
MAINS RATING: 400 A

NOTES:

CKT	DESCRIPTION	TRIP	L	P	A		B		C		P	L	TRIP	DESCRIPTION	CKT
1					2838 VA	2838 VA									2
3	CRAC-1	20 A		3			2838 VA	2838 VA			3		20 A	CRAC-2	4
5									2838 VA	2838 VA					6
7					2838 VA	2838 VA									8
9	CRAC-3	20 A		3			2838 VA	2838 VA			3		20 A	CRAC-4	10
11									2838 VA	2838 VA					12
13					2838 VA	2838 VA									14
15	CRAC-5	20 A		3			2838 VA	2838 VA			3		20 A	CRAC-6	16
17									2838 VA	2838 VA					18
19					2838 VA	2838 VA									20
21	CRAC-7	20 A		3			2838 VA	2838 VA			3		20 A	CRAC-8	22
23									2838 VA	2838 VA					24
25															26
27															28
29															30
31															32
33															34
35															36
37															38
39															40
41															42
		TOTAL LOAD:			22701 VA		22701 VA		22701 VA						
		TOTAL AMPS:			82 A		82 A		82 A						

LEGEND:

* = GFI BREAKER, ** = AFCI BREAKER, S = SHUNT TRIP BREAKER, F = PAINTED RED, L = LOCKABLE IN OPEN POSITION REQUIRED

LOAD CLASSIFICATION	CONNECTED LOAD	DEMAND FACTOR	ESTIMATED DEMAND	PANEL TOTALS	
Motor	68104 VA	85.00%	57888 VA		
				TOTAL CONNECTED:	68104 VA
				TOTAL DEMAND:	57888 VA
				TOTAL CONNECTED:	82 A
				TOTAL DEMAND:	70 A

NOTES:

BRANCH PANEL: (E) MCC-PANEL

LOCATION: A/C ROOM 120
SUPPLIED FROM:
MOUNTING: Recessed
ENCLOSURE: Type 1

VOLTAGE: 120/208 Wye
PHASES: 3
WIRES: 4
FREQUENCY: 60 HZ

A.I.C. RATING: 10000
MAINS TYPE: MLO
MAINS RATING: 100 A

NOTES:

CKT	DESCRIPTION	TRIP	L	P	A		B		C		P	L	TRIP	DESCRIPTION	CKT
1	EF-7	15 A		1	864 VA	500 VA					1		20 A	CH-1 CONTROLS	2
3	EXT REC EAST	20 A		1			180 VA	500 VA			1		20 A	CH-2 CONTROLS	4
5	EF-5	20 A		1					19 VA						6
7															8
9															10
11															12
13															14
15															16
17															18
19															20
21															22
23															24
25															26
27															28
29															30
31															32
33															34
35															36
37															38
39															40
41															42
		TOTAL LOAD:			1364 VA		680 VA		19 VA						
		TOTAL AMPS:			12 A		7 A		0 A						

LEGEND:

* = GFI BREAKER, ** = AFCI BREAKER, S = SHUNT TRIP BREAKER, F = PAINTED RED, L = LOCKABLE IN OPEN POSITION REQUIRED

LOAD CLASSIFICATION	CONNECTED LOAD	DEMAND FACTOR	ESTIMATED DEMAND	PANEL TOTALS	
Motor	883 VA	85.00%	750 VA		
REC	180 VA	100.00%	180 VA	**TOTAL CONNECTED:**	2063 VA
OTHERS	1000 VA	100.00%	1000 VA	**TOTAL DEMAND:**	1930 VA
				TOTAL CONNECTED:	6 A
				TOTAL DEMAND:	5 A

NOTES:

DRAFT

US Army Corps of Engineers
Japan District ®

FOR REVIEW ONLY

THESE DOCUMENTS ARE FOR CONCEPT DESIGN AND NOT INTENDED FOR CONSTRUCTION, BIDDING OR PERMIT PURPOSES. THEY WERE PREPARED BY, OR UNDER SUPERVISION OF:

CHRIS A. ZABRANSKY
NAME
152497 09/04/2025
REGISTRATION # DATE
TEXAS REGISTERED ENGINEERING FIRM F-2966

MARK	DESCRIPTION	DATE

ISSUE DATE: 09/04/2025
SOLICITATION NO.: -
CONTRACT NO.: -
DRAWING CODE:

DESIGNED BY: C. ZABRANSKY
DRAWN BY: C. ZABRANSKY
CHECKED BY: C. KOHRMANN
SUBMITTED BY: A. GUERRA
SIZE: ISO A1
FILE NAME: E-604

US ARMY CORPS OF ENGINEERS
JAPAN ENGINEER DISTRICT
OKINAWA, JAPAN

Jacobs
JACOBS GOVERNMENT SERVICES COMPANY
777 MAIN STREET / FORT WORTH, TX 76102 USA

FY25 REPAIR HVAC WIDEBAND SATCOM OPS B100
CAMP BUCKNER COMMUNICATIONS ANNEX
OKINAWA, JAPAN
PROJECT NUMBER:D3449305

PANEL SCHEDULES

SHEET ID
E-604

BRANCH PANEL: (E) P4

LOCATION: ELEC... **VOLTAGE:** 480/277 Wye **A.I.C. RATING:** 14000
SUPPLIED FROM: **PHASES:** 3 **MAINS TYPE:** MCB
MOUNTING: Surface **WIRES:** 4 **MAINS RATING:** 225 A
ENCLOSURE: Type 1 **FREQUENCY:** 60 HZ **MCB RATING:** 225 A

NOTES:

CKT	DESCRIPTION	TRIP	L	P	A		B		C		P	L	TRIP	DESCRIPTION	CKT
1					14325 VA	1109 VA									2
3	(E) T-P2	60 A		3			12305 VA	1109 VA			3		30 A	AHU-2	4
5									11185 VA	1109 VA					6
7					1432 VA	5000 VA									8
9	DOAS-2	30 A		3			1432 VA	5000 VA			3		20 A	(E) SPARE	10
11									1432 VA	5000 VA					12
13					1197 VA	4212 VA									14
15	CU-6	20 A		3			1197 VA	4212 VA			3		30 A	CU-5	16
17									1197 VA	4212 VA					18
19															20
21															22
23															24
25															26
27															28
29															30
31															32
33															34
35															36
37															38
39															40
41															42
		TOTAL LOAD:			27275 VA		25255 VA		24135 VA						
		TOTAL AMPS:			99 A		92 A		87 A						

LEGEND:

* = GFI BREAKER, ** = AFCI BREAKER, S = SHUNT TRIP BREAKER, F = PAINTED RED, L = LOCKABLE IN OPEN POSITION REQUIRED

LOAD CLASSIFICATION	CONNECTED LOAD	DEMAND FACTOR	ESTIMATED DEMAND	PANEL TOTALS	
Motor	23849 VA	85.00%	20272 VA		
Spare	52815 VA	100.00%	52815 VA	**TOTAL CONNECTED:**	76664 VA
				TOTAL DEMAND:	73087 VA
				TOTAL CONNECTED:	92 A
				TOTAL DEMAND:	88 A

NOTES:

BRANCH PANEL: (E) P2

LOCATION: MECHANICAL ROOM 118 **VOLTAGE:** 120/208 Wye **A.I.C. RATING:** 10000
SUPPLIED FROM: **PHASES:** 3 **MAINS TYPE:** MCB
MOUNTING: Surface **WIRES:** 4 **MAINS RATING:** 225 A
ENCLOSURE: Type 1 **FREQUENCY:** 60 HZ

NOTES:

CKT	DESCRIPTION	TRIP	L	P	A		B		C		P	L	TRIP	DESCRIPTION	CKT
1	(E) LIGHTS	20 A		1	980 VA	630 VA					1		20 A	(E) LIGHTS	2
3	(E) LIGHTS	20 A		1			870 VA	820 VA			1		20 A	(E) LIGHTS	4
5	(E) LIGHTS	20 A		1					840 VA	890 VA	1		20 A	(E) LIGHTS	6
7	(E) LIGHTS	20 A		1	445 VA	760 VA					1		20 A	(E) LIGHTS	8
9	EF-2	15 A		1			336 VA	900 VA			1		20 A	(E) RECEPTACLES	10
11	EF-3	15 A		1					154 VA	510 VA	1		20 A	(E) EWC	12
13	(E) MICROWAVE OVEN	20 A		1	850 VA	1130 VA					1		20 A	(E) WASHER	14
15	(E) RECEPTACLES	20 A		1			1000 VA	1000 VA			1		20 A	(E) PROJECTOR	16
17	(E) REFRIGERATOR	20 A		1					670 VA	720 VA	1		20 A	(E) RECEPTACLES	18
19	(E) DISPOSER	20 A		1	750 VA	9 VA					1		15 A	EF-1	20
21	ROOFTOP REC	20 A		1			360 VA	750 VA			1		20 A	(E) EXHAUST FAN	22
23	EF-4	15 A		1					154 VA	1184 VA	2		30 A	CU-4	24
25	EXTERIOR REC NORTH	20 A		1	180 VA	1184 VA									26
27	F MNS	20 A		1			1200 VA	641 VA			2		15 A	CU-7	28
29										641 VA					30
31	CU-8	15 A		2	761 VA										32
33							761 VA								34
35	CU-9	20 A		2					1184 VA						36
37					1184 VA										38
39															40
41															42
		TOTAL LOAD:			8862 VA		8638 VA		6946 VA						
		TOTAL AMPS:			76 A		74 A		58 A						

LEGEND:

* = GFI BREAKER, ** = AFCI BREAKER, S = SHUNT TRIP BREAKER, F = PAINTED RED, L = LOCKABLE IN OPEN POSITION REQUIRED

LOAD CLASSIFICATION	CONNECTED LOAD	DEMAND FACTOR	ESTIMATED DEMAND	PANEL TOTALS	
Motor	8190 VA	85.00%	6962 VA		
Spare	14515 VA	100.00%	14515 VA	**TOTAL CONNECTED:**	24445 VA
REC	540 VA	100.00%	540 VA	**TOTAL DEMAND:**	23217 VA
OTHERS	1200 VA	100.00%	1200 VA	**TOTAL CONNECTED:**	68 A
				TOTAL DEMAND:	64 A

NOTES: 1. PROVIDE RED LOCK-ON BREAKER FOR FA EQUIPMENT.

BRANCH PANEL: (E) P2-1

LOCATION: MECHANICAL ROOM 118 **VOLTAGE:** 120/208 Wye **A.I.C. RATING:**
SUPPLIED FROM: T-P2 **PHASES:** 3 **MAINS TYPE:**
MOUNTING: Surface **WIRES:** 4 **MAINS RATING:** 225 A
ENCLOSURE: Type 1 **FREQUENCY:** 60 HZ **MCB RATING:** 175 A

NOTES:

CKT	DESCRIPTION	TRIP	L	P	A		B		C		P	L	TRIP	DESCRIPTION	CKT
1					7770 VA										2
3	(E) PANEL D	20 A		3			7580 VA								4
5									7380 VA						6
7					555 VA	2750 VA									8
9	(E) SEWAGE PUMP UNIT	20 A		3			555 VA	2750 VA			2		20 A	(E) EWH	10
11									555 VA	2500 VA					12
13						2500 VA					2		20 A	(E) DRYER	14
15								750 VA							16
17										750 VA	2		20 A	(E) SPARE	18
19						750 VA					1		20 A	(E) SPARE	20
21								670 VA			1		20 A	(E) D.H.W. CIRC PUMP	22
23															24
25															26
27															28
29															30
31															32
33															34
35															36
37															38
39															40
41															42
		TOTAL LOAD:			14325 VA		12305 VA		11185 VA						
		TOTAL AMPS:			121 A		104 A		93 A						

LEGEND:

* = GFI BREAKER, ** = AFCI BREAKER, S = SHUNT TRIP BREAKER, F = PAINTED RED, L = LOCKABLE IN OPEN POSITION REQUIRED

LOAD CLASSIFICATION	CONNECTED LOAD	DEMAND FACTOR	ESTIMATED DEMAND	PANEL TOTALS	
Spare	37815 VA	100.00%	37815 VA		
				TOTAL CONNECTED:	37815 VA
				TOTAL DEMAND:	37815 VA
				TOTAL CONNECTED:	105 A
				TOTAL DEMAND:	105 A

NOTES:

BRANCH PANEL: (E) D

LOCATION: MECHANICAL ROOM 118 **VOLTAGE:** 120/208 Wye **A.I.C. RATING:**
SUPPLIED FROM: **PHASES:** 3 **MAINS TYPE:**
MOUNTING: Surface **WIRES:** 4 **MAINS RATING:** 100 A
ENCLOSURE: Type 1 **FREQUENCY:** 60 HZ

NOTES:

CKT	DESCRIPTION	TRIP	L	P	A		B		C		P	L	TRIP	DESCRIPTION	CKT
1	(E) RECEPTACLES	20 A		1	900 VA	1200 VA					1		20 A	(E) RECEPTACLES	2
3	(E) RECEPTACLES	20 A		1			900 VA	1200 VA			1		20 A	(E) RECEPTACLES	4
5	(E) RECEPTACLES	20 A		1					1200 VA	1200 VA	1		20 A	(E) RECEPTACLES	6
7	(E) RECEPTACLES	20 A		1	900 VA	900 VA					1		20 A	(E) RECEPTACLES	8
9	(E) RECEPTACLES	20 A		1			1000 VA	900 VA			1		20 A	(E) RECEPTACLES	10
11	(E) RECEPTACLES	20 A		1					1000 VA	9000 VA	1		20 A	(E) RECEPTACLES	12
13	(E) RECEPTACLES	20 A		1	540 VA	1500 VA					1		20 A	(E) RECEPTACLES FOR SHREDDER	14
15	(E) RECEPTACLES	20 A		1			1080 VA	1000 VA			1		20 A	(E) RECEPTACLES	16
17	(E) RECEPTACLES	20 A		1					1050 VA	500 VA	1		20 A	(E) DDC CONTROL PANEL	18
19	(E) RECEPTACLES	20 A		1	1080 VA	750 VA					1		20 A	(E) SPARE	20
21	(E) SPARE	20 A		1			750 VA	750 VA			1		20 A	(E) SPARE	22
23	(E) SPARE	20 A		1					750 VA	750 VA	1		20 A	(E) SPARE	24
25	(E) SPARE	20 A		1	750 VA	750 VA					1		20 A	(E) SPARE	26
27															28
29															30
31															32
33															34
35															36
37															38
39															40
41															42
		TOTAL LOAD:			9270 VA		7580 VA		15450 VA						
		TOTAL AMPS:			79 A		63 A		131 A						

LEGEND:

* = GFI BREAKER, ** = AFCI BREAKER, S = SHUNT TRIP BREAKER, F = PAINTED RED, L = LOCKABLE IN OPEN POSITION REQUIRED

LOAD CLASSIFICATION	CONNECTED LOAD	DEMAND FACTOR	ESTIMATED DEMAND	PANEL TOTALS	
Spare	32300 VA	100.00%	32300 VA		
				TOTAL CONNECTED:	32300 VA
				TOTAL DEMAND:	32300 VA
				TOTAL CONNECTED:	90 A
				TOTAL DEMAND:	90 A

NOTES:

DRAFT

US Army Corps of Engineers
Japan District ®

FOR REVIEW ONLY

THESE DOCUMENTS ARE FOR CONCEPT DESIGN AND NOT INTENDED FOR CONSTRUCTION, BIDDING OR PERMIT PURPOSES. THEY WERE PREPARED BY, OR UNDER SUPERVISION OF:

CHRIS A. ZABRANSKY
NAME
152497 09/04/2025
REGISTRATION # DATE
TEXAS REGISTERED ENGINEERING FIRM F-2966

MARK	DESCRIPTION	DATE

DESIGNED BY: C. ZABRANSKY
DRAWN BY: A. ZABRANSKY
CHECKED BY: C. KOHRMANN
SUBMITTED BY: A. GUERRA
SIZE: ISO A1
FILE NAME: E-605
ISSUE DATE: 09/04/2025
SOLICITATION NO.: -
CONTRACT NO.: -
DRAWING CODE: -

US ARMY CORPS OF ENGINEERS
JAPAN ENGINEER DISTRICT
OKINAWA, JAPAN

Jacobs
JACOBS GOVERNMENT SERVICES COMPANY
777 MAIN STREET / FORT WORTH, TX 76102 USA

FY25 REPAIR HVAC WIDEBAND SATCOM OPS B100
CAMP BUCKNER COMMUNICATIONS ANNEX
OKINAWA, JAPAN
PROJECT NUMBER:D3449305

PANEL SCHEDULES

SHEET ID
E-605

E E-605-

FILE PATH: C:\Users\zabranca\Documents\D3449305-E-3D_chris.zabransky.rvt
PLOT DATE: 8/29/2025 9:17:15 AM PLOTTED BY: PLOT SCALE:

BACKCHECK SUBMITTAL DESIGN

BRANCH PANEL: (E) NO.8

LOCATION:
SUPPLIED FROM:
MOUNTING: Surface
ENCLOSURE: Type 1

VOLTAGE: 120/208 Wye
PHASES: 3
WIRES: 4
FREQUENCY: 60 HZ

A.I.C. RATING:
MAINS TYPE:
MAINS RATING: 1000 A
MCB RATING: 1000 A

NOTES:

CKT	DESCRIPTION	TRIP	L	P	A		B		C		P	L	TRIP	DESCRIPTION	CKT
1					500 VA	0 VA									2
3	(E) SPD	20 A		3			500 VA	0 VA			3		100 A	(E) TPP-2	4
5									500 VA	0 VA					6
7	SPACE	--		1	--	0 VA									8
9	SPACE	--		1			--	0 VA			3		100 A	(E) TPP-4	10
11									0 VA	0 VA					12
13	(E) NORMALLY CLOSED TO CRITICAL PNL	20 A		3	0 VA	0 VA									14
15							0 VA	0 VA			3		100 A	(E) TPP-6	16
17									0 VA	0 VA					18
19	(E) TPP-1	20 A		3	0 VA	0 VA									20
21							0 VA	0 VA			3		100 A	(E) TPP-8	22
23									0 VA	0 VA					24
25	(E) TPP-3	20 A		3	0 VA	0 VA									26
27							0 VA	0 VA			3		100 A	(E) TPP-10	28
29									0 VA	0 VA					30
31	(E) TPP-5	20 A		3	0 VA	0 VA									32
33							0 VA	0 VA			3		20 A	(E) TPP-11	34
35									0 VA	0 VA					36
37	(E) TPP-7	20 A		3	0 VA	0 VA									38
39							0 VA	0 VA			3		20 A	(E) TPP-12	40
41									0 VA	0 VA					42
43	(E) TPP-9	20 A		3	0 VA	0 VA									44
45							0 VA	0 VA			3		20 A	(E) TPP-13	46
47									0 VA	0 VA					48
49	(E) FROM NO.14 MAIN 1	20 A		3	0 VA	0 VA									50
51							0 VA	0 VA			3		20 A	(E) SPARE	52
53									0 VA	0 VA					54
55	(E) FROM NO.15 MAIN 2	20 A		3	0 VA	0 VA									56
57							0 VA	0 VA			3		20 A	(E) TPP-3A	58
59										0 VA					60
61						--					1		--	SPACE	62
63								--			1		--	SPACE	64
65										--	1		--	SPACE	66
		TOTAL LOAD:			500 VA		500 VA		500 VA						
		TOTAL AMPS:			4 A		4 A		4 A						

LEGEND:

* = GFI BREAKER, ** = AFCI BREAKER, S = SHUNT TRIP BREAKER, F = PAINTED RED, L = LOCKABLE IN OPEN POSITION REQUIRED

LOAD CLASSIFICATION	CONNECTED LOAD	DEMAND FACTOR	ESTIMATED DEMAND	PANEL TOTALS	
Spare	1500 VA	100.00%	1500 VA		
				TOTAL CONNECTED:	1500 VA
				TOTAL DEMAND:	1500 VA
				TOTAL CONNECTED:	4 A
				TOTAL DEMAND:	4 A

NOTES:

DRAFT

US Army Corps of Engineers
Japan District ®

FOR REVIEW ONLY

THESE DOCUMENTS ARE FOR CONCEPT DESIGN AND NOT INTENDED FOR CONSTRUCTION, BIDDING OR PERMIT PURPOSES. THEY WERE PREPARED BY, OR UNDER SUPERVISION OF:

CHRIS A. ZABRANSKY
NAME
152497 09/04/2025
REGISTRATION # DATE
TEXAS REGISTERED ENGINEERING FIRM F-2966

MARK	DESCRIPTION	DATE

ISSUE DATE: 09/04/2025
SOLICITATION NO.: -
CONTRACT NO.: -
DRAWING CODE:

DESIGNED BY: C. ZABRANSKY
DRAWN BY: C. ZABRANSKY
CHECKED BY: C. KOHRMANN
SUBMITTED BY: A. GUERRA
SIZE: ISO A1
FILE NAME: E-606

US ARMY CORPS OF ENGINEERS
JAPAN ENGINEER DISTRICT
OKINAWA, JAPAN

Jacobs
JACOBS GOVERNMENT SERVICES COMPANY
777 MAIN STREET | FORT WORTH, TX 76102
USA

FY25 REPAIR HVAC WIDEBAND SATCOM OPS B100
CAMP BUCKNER COMMUNICATIONS ANNEX
OKINAWA, JAPAN
PROJECT NUMBER:D3449305

PANEL SCHEDULES

SHEET ID
E-606

FILE PATH: C:\Users\zabranca\Documents\D3449305-E-3D_chris.zabransky.rvt
PLOT DATE: 8/29/2025 9:17:16 AM PLOTTED BY: PLOT SCALE:

BACKCHECK SUBMITTAL DESIGN

LIGHTING CONTROL MATRIX

ROOM / AREA CONTROLLED	WALLSTATION/ SWITCH	OCCUPANCY SENSOR	VACANCY SENSOR	RECEPTACLE CONTROL	TIME-CLOCK	DAYLIGHT/PHOTO SENSOR	CONTROL SEQUENCE
CORRIDORS / VESTIBULES		X					OCCUPANCY SENSOR TURNS LIGHTS "ON" WHEN OCCUPIED AND DIM TO 50% LIGHT OUTPUT AFTER 20 MINUTES OF NO OCCUPANCY.
CONFERENCE ROOM / CLASSROOM	X		X	X			MANUAL ON AT WALL STATION WITH 3 BUTTON DIMMING SWITCH PROGRAMMED TO 0%/50%/100% LIGHT OUTPUT WITH RAISE/LOWER OPTIONS. VACANCY SENSOR TURNS LIGHTS "OFF" AFTER 20 MINUTES OF NO OCCUPANCY. CONTROLLED RECEPTACLES TO TURN OFF 5 MINUTES AFTER LIGHTS WHERE INDICATED.
RESTROOMS	X	X					OCCUPANCY SENSOR TURNS LIGHTS "ON" WHEN OCCUPIED AND "OFF" AFTER 10 MINUTES OF NO OCCUPANY. OVERRIDE WALLSTATION TURNS LIGHTS "ON."

LUMINAIRE SCHEDULE

TYPE MARK	DESCRIPTION	LUMENS	LAMP TYPE	COLOR TEMPERATURE	VOLTAGE	WATTAGE	MOUNTING	COMMENTS
DL	50MM DOWNLIGHT	750	LED	4000K	120/277	8.6	RECESSED	
SM	600MM X 1200MM ACRYLIC LENS LED INDIRECT SURFACE MOUNT, MEDIUM OUTPUT, 0-10V DIMMING DRIVER	3000	LED	4000K	120/277	20	SURFACE MOUNTED	
TR1	600MM X 1200MM ACRYLIC LENS LED INDIRECT TROFFER, MEDIUM OUTPUT, 0-10V DIMMING DRIVER	3000	LED	4000K	120/277	20	RECESSED	
TR2	600MM X 1200MM ACRYLIC LENS LED INDIRECT TROFFER, MEDIUM OUTPUT, 0-10V DIMMING DRIVER	4000	LED	4000K	120/277	27	RECESSED	
V	LINEAR VANITY FIXTURE	1800	LED	4000K	120/277	27	SURFACE MOUNTED	
WM	1200MM LED WRAP, WALL MOUNTED	3000	LED	4000K	120/277	25	SURFACE MOUNTED	
X1	EDGE-LIT EXIT SIGN, SINGLE/DOUBLE FACE, RED LETTERS ON CLEAR BACKGROUND, ALUMINUM HOUSING	-	LED	-	120/277	5	UNIVERSAL	

DRAFT

US Army Corps of Engineers
Japan District ®

FOR REVIEW ONLY
THESE DOCUMENTS ARE FOR CONCEPT DESIGN AND NOT INTENDED FOR CONSTRUCTION, BIDDING OR PERMIT PURPOSES. THEY WERE PREPARED BY, OR UNDER SUPERVISION OF:
CHRIS A. ZABRANSKY
NAME
152497 09/04/2025
REGISTRATION # DATE
TEXAS REGISTERED ENGINEERING FIRM F-2966

MARK	DESCRIPTION	DATE

DESIGNED BY: C. ZABRANSKY
DRAWN BY: C. ZABRANSKY
CHECKED BY: C. KOHRMANN
SUBMITTED BY: A. GUERRA
SIZE: ISO A1
ISSUE DATE: 09/04/2025
SOLICITATION NO.: -
CONTRACT NO.: -
DRAWING CODE:
FILE NAME: E-607

US ARMY CORPS OF ENGINEERS
JAPAN ENGINEER DISTRICT
OKINAWA, JAPAN
Jacobs
JACOBS GOVERNMENT SERVICES COMPANY
777 MAIN STREET / FORT WORTH, TX 76102
USA

FY25 REPAIR HVAC WIDEBAND SATCOM OPS B100
CAMP BUCKNER COMMUNICATIONS ANNEX
OKINAWA, JAPAN
PROJECT NUMBER:D3449305
LIGHTING SCHEDULES

SHEET ID
E-607

E E-607-

FILE PATH: C:\Users\zabranca\Documents\D3449305-E-3D_chris.zabransky.rvt
PLOT DATE: 8/29/2025 9:17:16 AM PLOTTED BY: PLOT SCALE: 1 : 10

BACKCHECK SUBMITTAL DESIGN

COMMUNICATIONS

AC GRADE, FIRE RATED PLYWOOD BACKBOARD, 1220MM X 2438MM X 19MM

TELECOM GROUND BAR (PBB/SBB)

SERVICE ENTRANCE PROTECTION TERMINAL BLOCK

TELECOM EQUIPMENT RACK

LADDER STYLE CABLE TRAY

WELDED WIRE BASKET STYLE CABLE TRAY

FREESTANDING EQUIPMENT CABINET

X
WALL MOUNTED DATA OUTLET - UN-SECURE
2N - TWO CAT 6 UTP, BLUE
4N - FOUR CAT 6 UTP, BLUE

SEE SHEET T-502 FOR FACE PLATE DETAILS
SEE GENERAL NOTE P/T-001 FOR MOUNTING HEIGHTS
CABLE TO MATCH OUTLET JACK COLORING

X
WALL MOUNTED DATA OUTLET - SECURE
2S - TWO CAT 6A F/UTP, ORANGE
4S - FOUR CAT 6A F/UTP, ORANGE

SEE SHEET T-502 FOR FACE PLATE DETAILS
SEE GENERAL NOTE P/T-001 FOR MOUNTING HEIGHTS
CABLE TO MATCH OUTLET JACK COLORING

X
ABOVE CEILING DATA OUTLET - UN-SECURE, BLUE

WAP - TWO UNSECURE CAT6 UTP FOR ACCESS POINT
CAM - ONE CAT 6 UTP FOR IP CAMERA

SEE SHEET T-502 FOR FACE PLATE DETAILS
SEE GENERAL NOTE P/T-001 FOR MOUNTING HEIGHTS
CABLE TO MATCH OUTLET JACK COLORING

FB2
FLOOR BOX OUTLET DATA WITH TWO (2) CAT 6. ONE INCH CONDUIT FROM NEAREST BLACK CABLE TRAY OR AS INDICATED ON PLANS.

ABBREVIATIONS

ACS	ACCESS CONTROL SYSTEM
ACPB	AC POWER BLOCK
AFC	ABOVE FINISHED CEILING
AFF	ABOVE FINISHED FLOOR
AFG	ABOVE FINISHED GRADE
ANN	ANNUNCIATOR
ARCH	ARCHITECTURAL
AV	AUDIO AND VISUAL
BAS	BUILDING AUTOMATION SYSTEM
BATT	BATTERY
BB	BACKBONE
BBFPP	BACKBONE FIBER PATCH PANEL
BBV	BACKBONE VOICE
BEPB	BUILDING ENTRANCE PROTECTION BLOCKS
BLDG	BUILDING
BMS	BALANCED MAGNETIC SWITCH
C	CONDUIT
CAB	CABINET
CAT	CATEGORY
CCTV	CLOSED CIRCUIT TELEVISION
CLG	CEILING
CMH	COMMUNICATIONS MANHOLE
COB	CENTER OF BOX
COMM	COMMUNICATIONS
CONST	CONSTRUCTION
CONT	CONTINUATION
DIST	DISTRIBUTION
DCPB	DC POWER BLOCK
DWG	DRAWING
(E)	EXISTING
EF	ENTRANCE FACILITY
EL	ELEVATION
ELEC	ELECTRICAL
ELEV	ELEVATOR
EMER	EMERGENCY
ESM	ENERGY STORAGE MODULE
ESS	ENERGY STORAGE SYSTEM
ESU	ENERGY STORAGE UNIT
EQPT	EQUIPMENT
EXIST	EXISTING
FA	FIRE ALARM
FACP	FIRE ALARM CONTROL PANEL
FIXT	FIXTURE
FLR	FLOOR
FO	FIBER OPTIC
FTP	FIELD TERM PLUG
GSF	GRIDSTAR FLOW
HCPP	HORIZONTAL COPPER PATCH PANEL
HFPP	HORIZONTAL FIBER PATCH PANEL
HMI	HUMAN MACHINE INTERFACE
HOV	HORIZONTAL VOICE
IDS	INTRUSION DETECTION SYSTEM
JB	JUNCTION BOX
MFR	MANUFACTURER
MH	MOUNTING HEIGHT
MMF	MULTI MODE FIBER
MTD	MOUNTED
NIC	NOT IN CONTRACT
NTS	NOT TO SCALE
OH	OVERHEAD
OSP	OUTSIDE PLANT
PA	PUBLIC ADDRESS
PB	PULL BOX
PBB	PRIMARY BONDING BUSBAR
PBX	PRIVATE BRANCH EXCHANGE
PC	PERSONAL COMPUTER
PCS	POWER CONVERSION SYSTEM (INVERTER)
PLAS	PLASTIC
PP	PATCH PANEL
PR	PAIR
PWR	POWER
QTY	QUANTITY
RBB	RACK BONDING BUSBAR
RBC	RACK BONDING CONDUCTOR
RECP	RECEPTACLE
REQD	REQUIRED
RGS	RIGID GALVANIZED STEEL
RM	ROOM
RSC	RIGID STEEL CONDUIT
SBB	SECONDARY BONDING BUSBAR
SC	SITE CONTROLLER
SCC	SITE CONTROLLER CABINET
SCRT	SECURITY
SECT	SECTION
SPEC	SPECIFICATION
SMF	SINGLE MODE FIBER
SP	SERVICE PROVIDER
SURF	SURFACE
SW	SWITCH
SYM	SYMMETRICAL
SYS	SYSTEMS
TBB	TELECOMMUNICATIONS BONDING BACKBONE
TEL	TELEPHONE
TELECOM	TELECOMMUNICATIONS
TER	TELECOMMUNICATIONS EQUIPMENT ROOM
TR	TELECOMMUNICATIONS ROOM
TYP	TYPICAL
UG	UNDERGROUND
UON	UNLESS OTHERWISE NOTED
UPS	UNINTERRUPTIBLE POWER SUPPLY
WP	WEATHERPROOF
XFR	TRANSFER
XP	EXPLOSION PROOF

GENERAL NOTES

A	REFER TO G-I002 AND G-I003 FOR FULL LIST OF INTERDISCIPLINARY ABBREVIATIONS.
B	COORDINATE WITH THE COMMUNICATIONS POINT OF CONTACT FOR CHANGES TO EXISTING COMMUNICATION CABLING.
C	PROVIDE U.L. CLASSIFIED FIRE RATED ASSEMBLY AT PENETRATIONS OF FIRE RATED WALLS. COORDINATE WITH ARCHITECTURAL DRAWINGS/DETAILS/SPECIFICATIONS.
D	PROVIDE INFORMATION TECHNOLOGY WIRING (I.E. LAN, PHONE, ETC.) UP TO AND INCLUDING THE FACE PLATE FOR FREESTANDING AND/OR SYSTEMS FURNITURE DESK TOPS.
E	DIMENSIONS SHOWN ON THESE DRAWINGS ARE INTENDED TO PROVIDE GENERAL LOCATIONS AS REQUESTED BY THE OWNER. THE CONTRACTOR IS RESPONSIBLE FOR CONFIRMING DIMENSIONS PRIOR TO ROUGH-IN AND IMMEDIATELY REPORT CONFLICTS WITH THE OUTLET PLACEMENT TO THE GENERAL CONTRACTOR
F	PLASTIC TIE WRAPS ARE NOT PERMITTED ON THIS INSTALLATION. CABLE ROUGH-IN AND DRESS-OUT MUST BE DONE WITH VELCRO ONLY. CABLES BUNDLED WITH PLASTIC TIE WRAPS MUST BE IMMEDIATELY REPLACED AT THE CONTRACTOR'S EXPENSE.
G	DO NOT INSTALL CABLES IN CONDUIT SLEEVE, STUB UP, OR WALL CAP WITHOUT A PROTECTIVE BUSHING. CABLES PULLED INTO UNPROTECTED CONDUITS MUST BE REPLACED AT THE CONTRACTOR'S EXPENSE. DO NOT INSTALL CABLING INTO CONDUIT THAT HAS NOT BEEN CONFIRMED TO BE BLOWN CLEAR. COORDINATE WITH ELECTRICAL PRIOR TO ROUGH-IN OF CABLING.
H	CABLING FOUND PAINTED DURING THE CONSTRUCTION PROCESS MUST BE REPLACED AT THE CONTRACTOR'S EXPENSE. DIV 27 CONTRACTOR WILL COORDINATE WITH THE GENERAL CONTRACTOR AND PAINTER TO AVOID CONFLICTS.
I	IT IS THE RESPONSIBILITY OF THE CONTRACTORS TO REFERENCE BOTH THE PROJECT DRAWINGS AND THE PROJECT SPECIFICATIONS. TOGETHER THEY FORM THE COMPLETE CONTRACT DOCUMENTS. PLEASE REFER TO THE PROJECT SPECIFICATIONS FOR MATERIALS, EQUIPMENT AND COMPONENTS NOT INDICATED ON THE DRAWING SET.
J	CABLING INSTALLED IN AREAS WITH EXPOSED CEILINGS MUST BE INSTALLED IN A PROPERLY SIZED CONDUIT PATHWAY. CONDUIT PATHWAYS MUST BE PROVIDED BY THE CONTRACTOR. THE CONDUIT MAY BE PAINTED TO MATCH CEILING COLOR AS DIRECTED BY THE CONTRACT DOCUMENTS.
K	CABLE, PATHWAYS, TERMINATIONS AND EQUIPMENT MUST MAINTAIN MINIMUM SEPARATION DISTANCES BETWEEN SECURE AND UN-SECURE DATA . REFERENCE A1/T-501
L	HORIZONTAL COPPER CABLING MUST BE ROUTED IN BASKET TYPE TRAYS OVERHEAD. CABLES ROUTING BETWEEN THE DATA OUTLET AND THE CABLE TRAY MUST BE INSTALLED WITHIN METALLIC CONDUITS. SECURE PATHWAYS ON STC WALLS MUST BE SURFACE MOUNTED AND VISIBLE FOR INSPECTION.
M	SYMBOLS, ABBREVIATIONS AND GENERAL NOTES SHOWN ARE NOT NECESSARILY USED ON THIS PROJECT.
N	SEE RISER DIAGRAM FOR CABLE SIZES, CONDUIT SIZES, AND DEVICES NOT SHOWN ON PLANS.
O	SECURITY CONDUITS MUST BE EMT UTILIZING COMPRESSION TYPE FITTINGS AND INCLUDE 200 LBS TENSILE STRENGTH PULL TAPES.
P	MOUNTING HEIGHTS ABOVE FINISHED FLOOR, TO CENTERLINE OF DEVICE, ARE AS FOLLOWS, UNLESS OTHERWISE NOTED:
	DATA OUTLETS---------- ----------457MM
	TELEPHONE OUTLETS----------1060MM
	COUNTER TOP OUTLETS (CT)----------200MM ABOVE COUNTER
	WIRELESS ACCESS POINT---------- 300MM ABOVE FINISHED CEILING
	CEILING SPEAKERS----------FLUSH WITH FINISHED CEILING
	TELEVISION OUTLET----------1800MM
	CARD READER BACKBOX----------1060MM

NOTE: TELECOMMUNICATIONS PLANS AND SPECIFICATIONS ARE FOR INFORMATION ONLY. THERE IS NO NEW TELECOMMUNICATIONS WORK ASSOCIATED WITH THE MECHANICAL RENOVATIONS. TELECOMMUNICATIONS PLANS AND SPECIFICATIONS SERVE AS A GUIDEPOINT AND REFERENCE OF EXISTING CONDTIONS SHOULD ANY DAMAGE OCCUR TO NETWORK OPERATIONS DURING CONSTRUCTION. THE TELECOMMUNICATIONS PLANS CAN BE USED AS A GUIDE FOR REMEDIAL ACTION IF / AS REQUIRED. UNINTERRUPTED NETWORK OPERATIONS MUST BE MAINTAINED DURING CONSTRUCTION. IT IS THE CONTRACTORS REPSONIBILTY TO REPAIR ANY DAMAGE MADE AS A RESULT OF CONSTRUCTION.

DRAFT

US Army Corps of Engineers
Japan District ®

FOR REVIEW ONLY
THESE DOCUMENTS ARE FOR CONCEPT DESIGN AND NOT INTENDED FOR CONSTRUCTION BIDDING OR PERMIT PURPOSES. THEY WERE PREPARED BY, OR UNDER SUPERVISION OF:
RENE RUBIO
NAME
112613 09/04/2025
REGISTRATION # DATE
TEXAS REGISTERED ENGINEERING FIRM F-2966

MARK	DESCRIPTION	DATE

ISSUE DATE: 09/04/2025
SOLICITATION NO.:
CONTRACT NO.:
DRAWING CODE:

DESIGNED BY: R. RUBIO
DRAWN BY: R. RUBIO
CHECKED BY: S. LEFFLER
SUBMITTED BY: A. GUERRA
SIZE: ISO A1
FILE NAME: T-001

US ARMY CORPS OF ENGINEERS
JAPAN ENGINEER DISTRICT
OKINAWA, JAPAN

Jacobs
JACOBS GOVERNMENT SERVICES COMPANY
777 MAIN STREET / FORT WORTH, TX 76102
USA

FY25 REPAIR HVAC WIDEBAND SATCOM OPS B100
CAMP BUCKNER COMMUNICATIONS ANNEX
OKINAWA, JAPAN
PROJECT NUMBER:D3449305

GENERAL NOTES & LEGEND

SHEET ID
T-001

T T-001- T

FILE PATH: C:\Users\rubioxr\OneDrive - Jacobs\Documents\D3449305-T-3D_rene.rubio.rvt
PLOT DATE: 8/27/2025 4:11:13 PM PLOTTED BY: PLOT SCALE: As indicated

BACKCHECK SUBMITTAL DESIGN

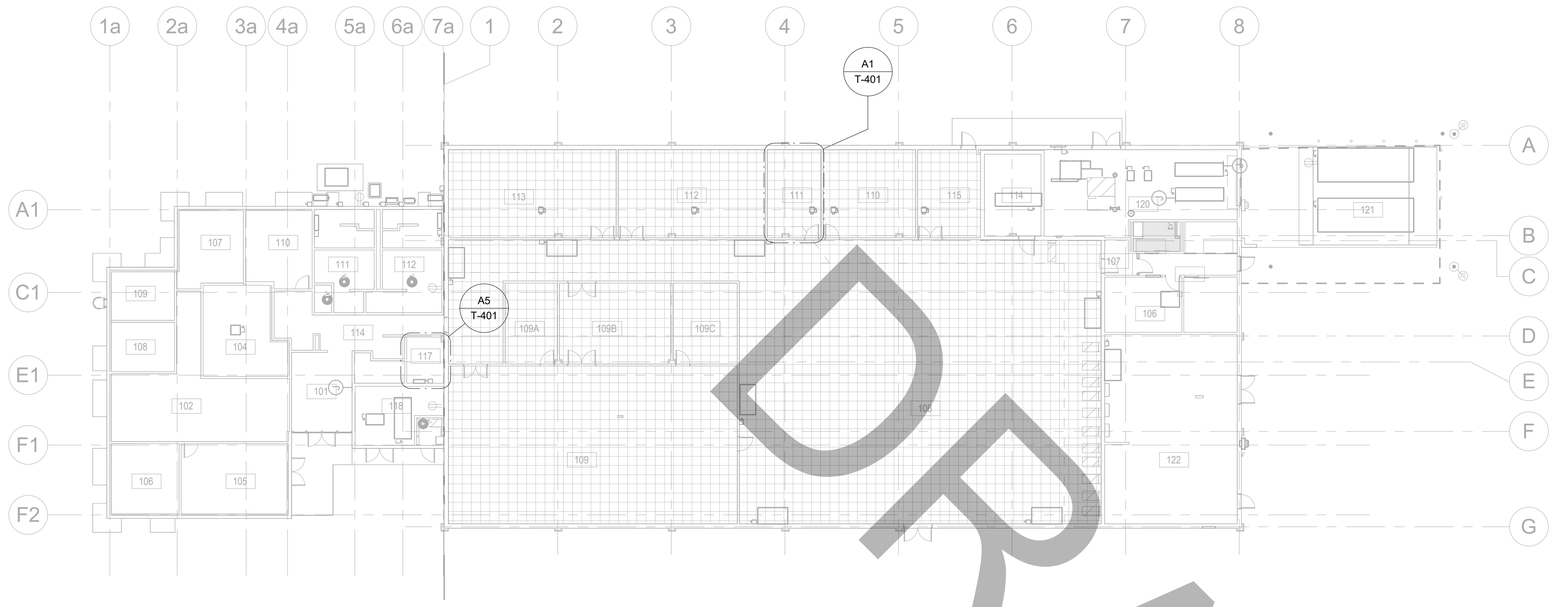

D1 TELECOM - OVERALL
1 : 200

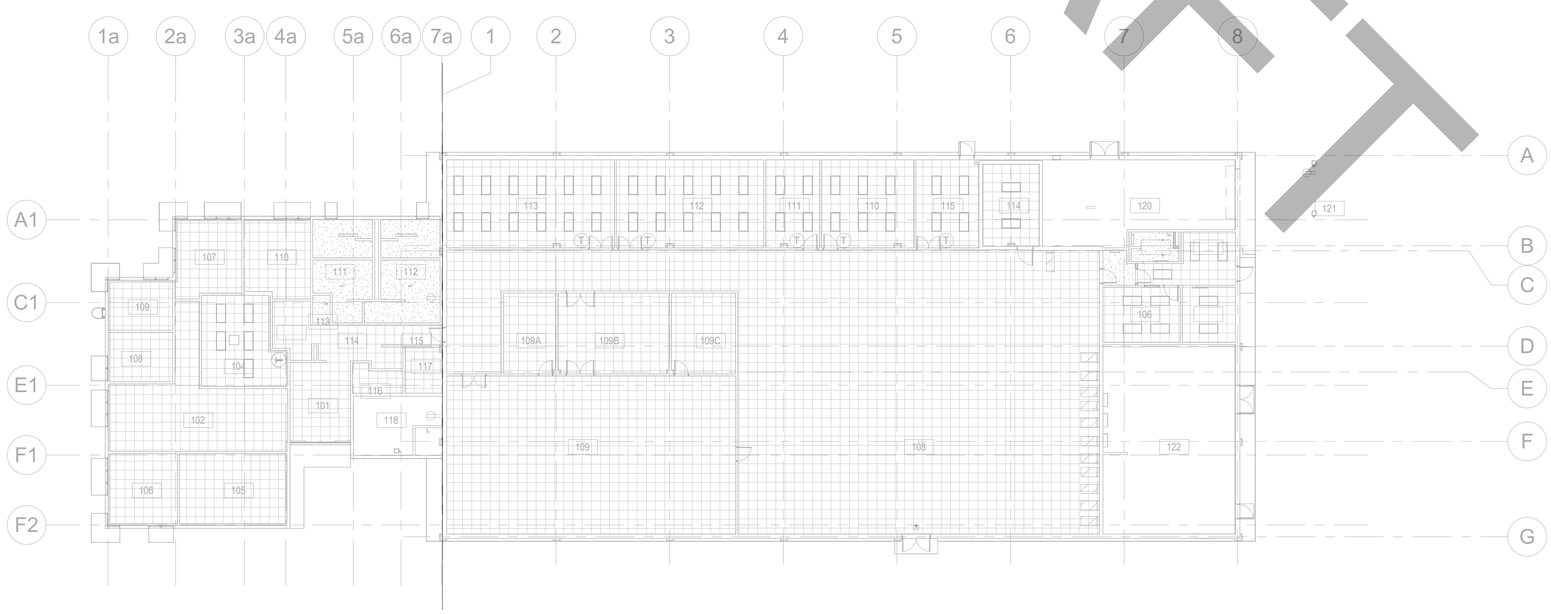

A1 OVERALL REFLECTED CEILING PLAN
1 : 200

DRAFT

GENERAL SHEET NOTES

A	MAINTAIN SEPARATION BETWEEN SECURE AND UNSECURE CABLING IN ACCORDINACE WITH A1/T-501.
B	TELECOMMUNICATIONS CONDUITS MUST BE BONDED TO THE PBB/SBB, BUILDING STEEL OR TO THE NEAREST CABLE TRAY.
C	REFER TO SHEETS GI010 AND GI011 FOR OVERALL PHASING INFORMATION.
D	CONTRACTOR MUST VERIFY FIELD CONDITIONS PRIOR TO START OF WORK TO INLCUDE BUT NOT LIMITED TO ROUTING OF OVERHEAD AND UNDERFLOOR CABLE TRAYS, AVAILABILITY OF PATCH PANEL AND RACK SPACE, LOCATON OF SLEEVES AND PENETRATIONS, ROUTING OF FIBER AND COPPER FEEDERS.

KEY PLAN

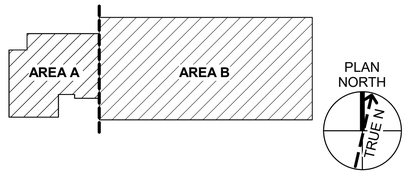

GRAPHIC SCALE(S)

0 4000 8000
SCALE: 1:200

US Army Corps of Engineers
Japan District ®

FOR REVIEW ONLY

THESE DOCUMENTS ARE FOR CONCEPT DESIGN AND NOT INTENDED FOR CONSTRUCTION, BIDDING OR PERMIT PURPOSES. THEY WERE PREPARED BY, OR UNDER SUPERVISION OF:

RENE RUBIO
NAME

112613 — REGISTRATION #
09/04/2025 — DATE

TEXAS REGISTERED ENGINEERING FIRM F-2966

MARK	DESCRIPTION	DATE

ISSUE DATE: 09/04/2025
SOLICITATION NO.:
CONTRACT NO.:
DRAWING CODE:

DESIGNED BY: R. RUBIO
DRAWN BY: R. RUBIO
CHECKED BY: S. LEFFLER
SUBMITTED BY: A. GUERRA
SIZE: ISO A1
FILE NAME: T-101

US ARMY CORPS OF ENGINEERS
JAPAN ENGINEER DISTRICT
OKINAWA, JAPAN

Jacobs
JACOBS GOVERNMENT SERVICES COMPANY
777 MAIN STREET / FORT WORTH, TX 76102 USA

FY25 REPAIR HVAC WIDEBAND SATCOM OPS B100
CAMP BUCKNER COMMUNICATIONS ANNEX
OKINAWA, JAPAN
PROJECT NUMBER:D3449305

TELECOM - OVERALL PLANS

SHEET ID

T-101

T T-101- T

FILE PATH: C:\Users\rubioxr\OneDrive - Jacobs\Documents\D3449305-T-3D_rene.rubio.rvt
PLOT DATE: 8/27/2025 4:11:15 PM PLOTTED BY: PLOT SCALE: 1 : 200

BACKCHECK SUBMITTAL DESIGN

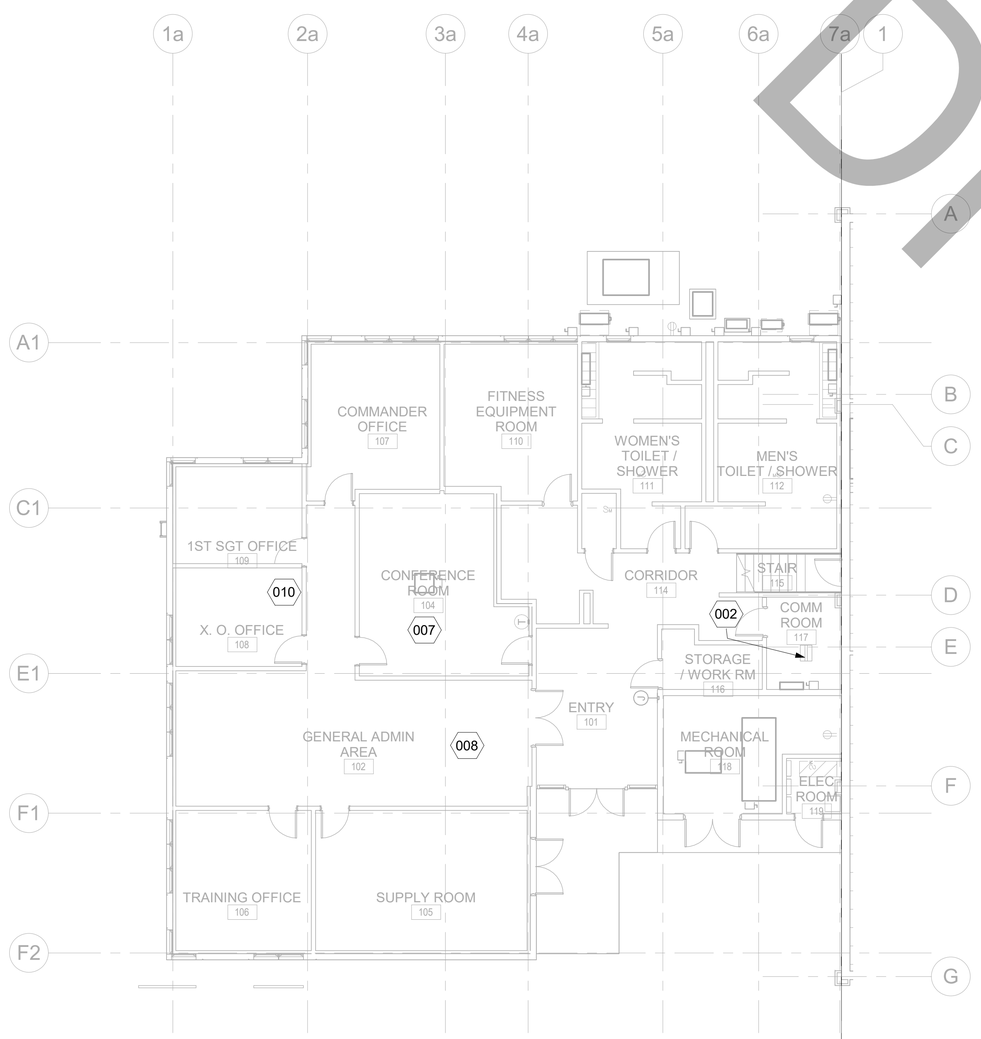

A1 PARTIAL FLOOR PLAN - AREA A
1 : 100

DRAFT

GENERAL SHEET NOTES

A	MAINTAIN SEPARATION BETWEEN SECURE AND UNSECURE CABLING IN ACCORDINACE WITH A1/T-501.
B	TELECOMMUNICATIONS CONDUITS MUST BE BONDED TO THE PBB/SBB, BUILDING STEEL OR TO THE NEAREST CABLE TRAY.
C	REFER TO SHEETS GI010 AND GI011 FOR OVERALL PHASING INFORMATION.
D	CONTRACTOR MUST VERIFY FIELD CONDITIONS PRIOR TO START OF WORK TO INLCUDE BUT NOT LIMITED TO ROUTING OF OVERHEAD AND UNDERFLOOR CABLE TRAYS, AVAILABILITY OF PATCH PANEL AND RACK SPACE, LOCATON OF SLEEVES AND PENETRATIONS, ROUTING OF FIBER AND COPPER FEEDERS.

XX SHEET KEYNOTES

002	EXISTING NETWORK TWO-POST EQUIPMENT RACK IN COMM ROOM 117 WITH CAT6 COPPER PATCH PANEL. THIS RACK IS NOT PART OF THE DEMOLTION SCOPE. ROOM 117 IS SUPPORTED FROM ISSO RM 111 VIA FIBER OPTIC CABLE ROUTED OVERHEAD. CARE MUST BE TAKEN TO ENSURE THAT DAMAGE DOES NOT OCCUR AND PERSONEL MUST BE PREPARED TO REMEDY DISRUPTION SHOULD IT RESULT FROM RENOVATIONS. NETWORK OPERATIONS MUST REMAIN IN CONTINUOUS SERVICE. THIS ROOM MAY BE USED FOR ADDITIONAL CONNECTIONS TO HVAC MONITORING EQUIPMENT AS REQUIRED.
007	CAUTION MUST BE EXERCISED SO THAT DAMAGE DOES NOT OCCUR TO AUDIO-VISUAL SYSTEMS. BE PREPARED TO REMEDY DISRUPTION SHOULD IT RESULT FROM RENOVATIONS. AV SYSTEMS MUST REMAIN FUNCTIONAL AND IN CONTINUOUS OPERATION.
008	CAUTION MUST BE EXERCISED SO THAT DAMAGE DOES NOT OCCUR TO CABLE TELEVISION (CATV) SYSTEMS. BE PREPARED TO REMEDY DISRUPTION SHOULD IT RESULT FROM RENOVATIONS. CATV SYSTEMS MUST REMAIN FUNCTIONAL AND IN CONTINUOUS OPERATION.
010	NETWORK CABLES ARE DISTRIBUTED THROUGH THE BUILDING SUPPORTING VARIOUS VOICE, DATA, AND OTHER SIGNALS. THIS NETWORK OF CABLES COMPRISES THE LOCAL AREA NETWORK (LAN). CAUTION MUST BE EXERCISED SO THAT DAMAGE DOES NOT OCCUR TO THE LAN CABLING. BE PREPARED TO REMEDY DISRUPTION SHOULD IT RESULT FROM RENOVATIONS. THE BUILDING LAN MUST REMAIN FUNCTIONAL AND IN CONTINUOUS OPERATION.

KEY PLAN

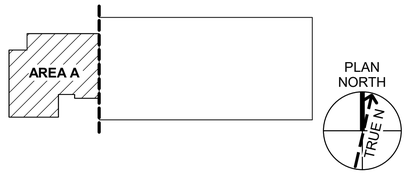

GRAPHIC SCALE(S)

0 2000 4000
SCALE: 1:100

US Army Corps of Engineers
Japan District ®

FOR REVIEW ONLY

THESE DOCUMENTS ARE FOR CONCEPT DESIGN AND NOT INTENDED FOR CONSTRUCTION, BIDDING OR PERMIT PURPOSES. THEY WERE PREPARED BY, OR UNDER SUPERVISION OF:

RENE RUBIO
NAME
112613 — REGISTRATION #
09/04/2025 — DATE
TEXAS REGISTERED ENGINEERING FIRM F-2966

MARK	DESCRIPTION	DATE

DESIGNED BY: R. RUBIO
DRAWN BY: R. RUBIO
CHECKED BY: S. LEFFLER
SUBMITTED BY: A. GUERRA
SIZE: ISO A1
ISSUE DATE: 09/04/2025
SOLICITATION NO.:
CONTRACT NO.:
DRAWING CODE:
FILE NAME: T-102

US ARMY CORPS OF ENGINEERS
JAPAN ENGINEER DISTRICT
OKINAWA, JAPAN

Jacobs
JACOBS GOVERNMENT SERVICES COMPANY
777 MAIN STREET / FORT WORTH, TX 76102 USA

FY25 REPAIR HVAC WIDEBAND SATCOM OPS B100
CAMP BUCKNER COMMUNICATIONS ANNEX
OKINAWA, JAPAN
PROJECT NUMBER:D3449305

TELECOM - PARTIAL FLOOR PLAN - AREA A

SHEET ID
T-102

T T-102- T

FILE PATH: C:\Users\rubioxr\OneDrive - Jacobs\Documents\D3449305-T-3D_rene.rubio.rvt
PLOT DATE: 8/27/2025 4:11:15 PM PLOTTED BY: PLOT SCALE: 1 : 100

BACKCHECK SUBMITTAL DESIGN

GENERAL NOTES

A	MAINTAIN SEPARATION BETWEEN SECURE AND UNSECURE CABLING IN ACCORDINACE WITH A1/T-501.
B	TELECOMMUNICATIONS CONDUITS MUST BE BONDED TO THE PBB/SBB, BUILDING STEEL OR TO THE NEAREST CABLE TRAY.
C	REFER TO SHEETS GI010 AND GI011 FOR OVERALL PHASING INFORMATION.
D	CONTRACTOR MUST VERIFY FIELD CONDITIONS PRIOR TO START OF WORK TO INLCUDE BUT NOT LIMITED TO ROUTING OF OVERHEAD AND UNDERFLOOR CABLE TRAYS, AVAILABILITY OF PATCH PANEL AND RACK SPACE, LOCATON OF SLEEVES AND PENETRATIONS, ROUTING OF FIBER AND COPPER FEEDERS.

KEYNOTES

001	EXISTING NETWORK EQUIPMENT CABINET ENCLOSURE IN ISSO RM 111 WITH CAT6 COPPER PATCH PANEL. MAY USE FOR ADDITIONAL CONNECTIONS TO HVAC MONITORING EQUIPMENT AS REQUIRED. THE IT CABINET IS NOT PART OF DEMO.
004	ESS UPGRADES ARE BEING PERFORMED UNDER A SEPARATE CONTRACT. CAUTION MUST BE EXERCISED SO THAT DAMAGE DOES NOT OCCUR AS A RESULT OF MECHANICAL RENOVATIONS. PERSONNEL MUST BE PREPARED TO REMEDY DISRUPTION SHOULD IT RESULT FROM MECHANICAL UPGRADES AND RENOVATIONS. ESS SYSTEMS MUST REMIAN FUNCTIONAL AND IN CONTINUOUS OPERATION.
005	APPROXIMATE LOCATION OF INCOMING COMMUICATIONS DUCT BANK AND FEEDER CABLING FROM BLD 400. INCOMING FIBER EXTENDS TO ISSO RM 111 WALL MOUNTED COMM RACK VIA UNDERFLOOR CABLE TRAY. FIBER PATHWAY IS IDENTIIFED BY ORANGE COLORED PLASTIC DUCT TUBING. CAUTION MUST BE EXERCISED SO THAT DAMAGE DOES NOT OCCUR AND PERSONEL MUST BE PREPARED TO REMEDY DISRUPTION SHOULD IT RESULT FROM RENOVATIONS. NETWORK OPERATIONS MUST REMAIN IN CONTINUOUS SERVICE.
006	THERE ARE VARIOUS ABOVE CEILING AND UNDERFLOOR CABLE TRAYS THAT ROUTE COMMUNICATIONS CABLING THROUGHOUT THE BUILDING. THESE EXISTING CABLE TRAYS MUST SUPPORT NEW CABLES AS REQUIRED. CAUTION MUST BE EXERCISED TO ENSURE THAT DAMAGE DOES NOT OCCUR AND PERSONNEL MUST BE PREPARED TO REMEDY DISRUPTION SHOULD IT RESULT FROM RENOVATIONS. FOR REFERENCE, RED TRAYS ROUTE UNDER FLOOR AND BLACK TRAYS ROUTE OVERHEAD - SIGNALS DO NOT MIX.
007	CAUTION MUST BE EXERCISED SO THAT DAMAGE DOES NOT OCCUR TO AUDIO-VISUAL SYSTEMS. BE PREPARED TO REMEDY DISRUPTION SHOULD IT RESULT FROM RENOVATIONS. AV SYSTEMS MUST REMAIN FUNCTIONAL AND IN CONTINUOUS OPERATION.
008	CAUTION MUST BE EXERCISED SO THAT DAMAGE DOES NOT OCCUR TO CABLE TELEVISION (CATV) SYSTEMS. BE PREPARED TO REMEDY DISRUPTION SHOULD IT RESULT FROM RENOVATIONS. CATV SYSTEMS MUST REMAIN FUNCTIONAL AND IN CONTINUOUS OPERATION.
009	CAUTION MUST BE EXERCISED SO THAT DAMAGE DOES NOT OCCUR TO RADIO COMMUNICATIONS ANTENNA SYSTEMS. PERSONEL MUST BE PREPARED TO REMEDY DISRUPTION SHOULD IT RESULT FROM RENOVATIONS. RADIO COMMUNICATIONS ANTENNA MUST REMAIN FUNCTIONAL AND IN CONTINUOUS OPERATION.

GENERAL SHEET NOTES

010	NETWORK CABLES ARE DISTRIBUTED THROUGH THE BUILDING SUPPORTING VARIOUS VOICE, DATA, AND OTHER SIGNALS. THIS NETWORK OF CABLES COMPRISES THE LOCAL AREA NETWORK (LAN). CAUTION MUST BE EXERCISED SO THAT DAMAGE DOES NOT OCCUR TO THE LAN CABLING. BE PREPARED TO REMEDY DISRUPTION SHOULD IT RESULT FROM RENOVATIONS. THE BUILDING LAN MUST REMAIN FUNCTIONAL AND IN CONTINUOUS OPERATION.
011	APPROXIMATE LOCATION OF WALL PENTRATION FOR ESS.
012	APPROXIMATE LOCATION OF WALL MOUNTED ESS EQUIPMENT SHOWN FOR REFERENCE.
013	APPROXIMATE LOCATION OF PUBLIC ADDRESS MIXER AMP IN CCTV CONTROL CONSOLE SHOWN FOR REFERENCE.
015	ELECTRICAL EQUIPMENT, REFER TO ELECTRICAL.
016	MECHANICAL EQUIPMENT, REFER TO MECHANICAL.

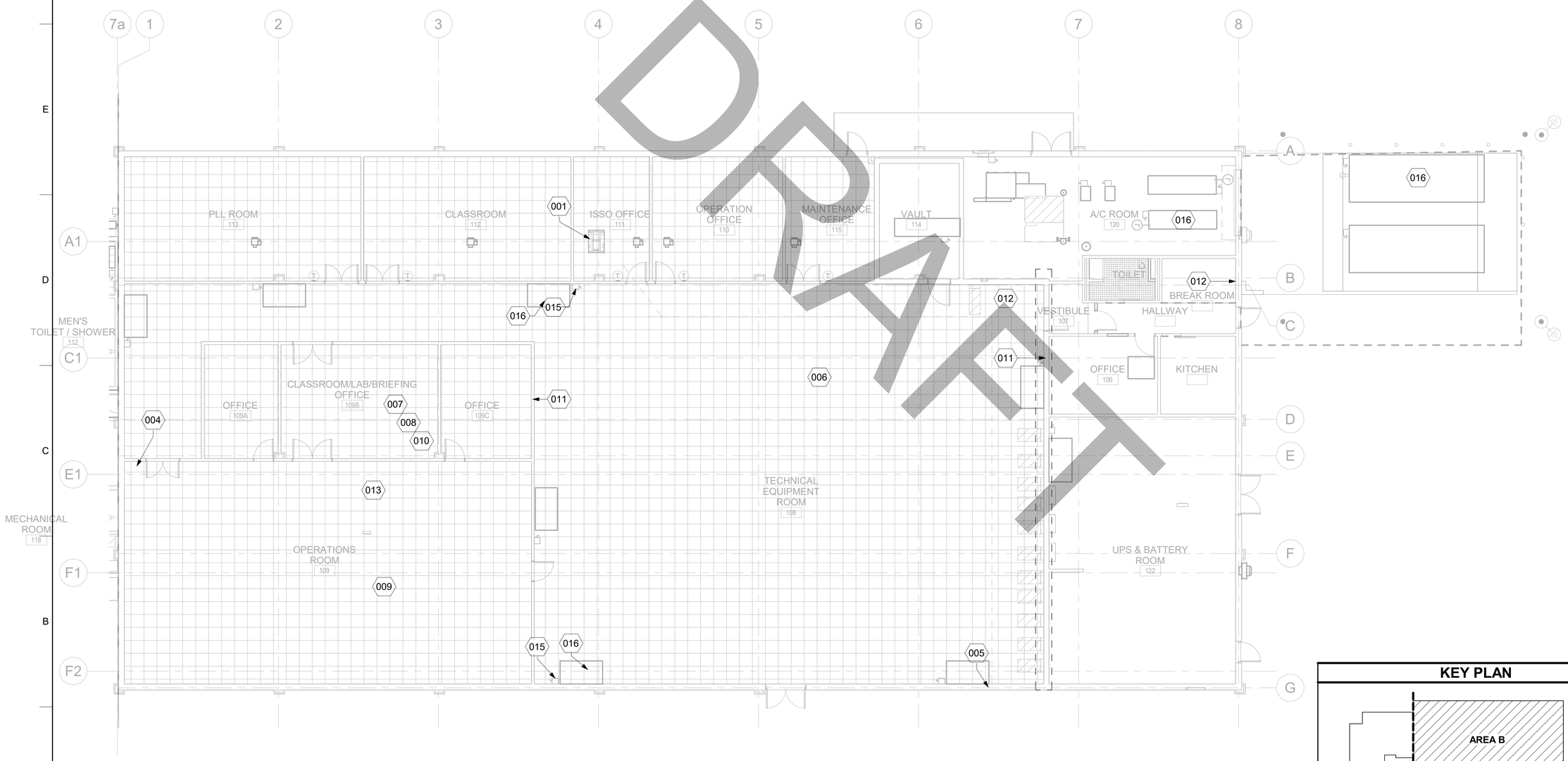

A1 PARTIAL FLOOR PLAN - AREA B
1 : 100

KEY PLAN

GRAPHIC SCALE(S)

0 2000 4000
SCALE: 1:100

US Army Corps of Engineers
Japan District ®

FOR REVIEW ONLY
THESE DOCUMENTS ARE FOR CONCEPT DESIGN AND NOT INTENDED FOR CONSTRUCTION BIDDING OR PERMIT PURPOSES. THEY WERE PREPARED BY, OR UNDER SUPERVISION OF:
RENE RUBIO
NAME
112613 REGISTRATION # 09/04/2025 DATE
TEXAS REGISTERED ENGINEERING FIRM F-2966

MARK	DESCRIPTION	DATE

DESIGNED BY: R. RUBIO
DRAWN BY: R. RUBIO
CHECKED BY: S. LEFFLER
SUBMITTED BY: A. GUERRA
SIZE: ISO A1
ISSUE DATE: 09/04/2025
SOLICITATION NO.:
CONTRACT NO.:
DRAWING CODE:
FILE NAME: T-103

US ARMY CORPS OF ENGINEERS
JAPAN ENGINEER DISTRICT
OKINAWA, JAPAN
Jacobs
JACOBS GOVERNMENT SERVICES COMPANY
777 MAIN STREET / FORT WORTH, TX 76102 USA

FY25 REPAIR HVAC WIDEBAND SATCOM OPS B100
CAMP BUCKNER COMMUNICATIONS ANNEX
OKINAWA, JAPAN
PROJECT NUMBER:D3449305
TELECOM - PARTIAL FLOOR PLAN - AREA B

SHEET ID
T-103

T T-103-

FILE PATH: C:\Users\rubioxr\OneDrive - Jacobs\Documents\D3449305-T-3D_rene.rubio.rvt
PLOT DATE: 8/27/2025 4:11:16 PM PLOTTED BY: PLOT SCALE: 1 : 100

BACKCHECK SUBMITTAL DESIGN

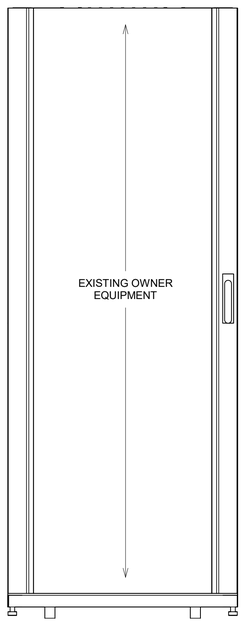

A1 EQUIPMENT CABINET ISSO RM 111
NTS

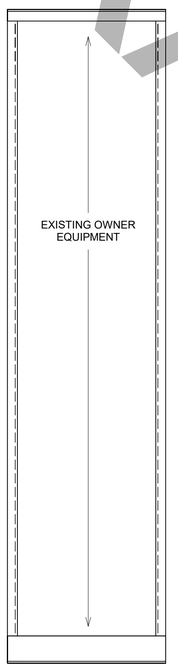

A4 EQUIPMENT RACK COMM RM 117
NTS

DRAFT

US Army Corps of Engineers
Japan District ®

FOR REVIEW ONLY

THESE DOCUMENTS ARE FOR CONCEPT DESIGN AND NOT INTENDED FOR CONSTRUCTION, BIDDING OR PERMIT PURPOSES. THEY WERE PREPARED BY, OR UNDER SUPERVISION OF:

RENE RUBIO
NAME

112613 — REGISTRATION #
09/04/2025 — DATE

TEXAS REGISTERED ENGINEERING FIRM F-2966

MARK	DESCRIPTION	DATE

DESIGNED BY: R. RUBIO
DRAWN BY: R. RUBIO
CHECKED BY: S. LEFFLER
SUBMITTED BY: A. GUERRA
SIZE: ISO A1
ISSUE DATE: 09/04/2025
SOLICITATION NO.: -
CONTRACT NO.: -
DRAWING CODE:
FILE NAME: T-201

US ARMY CORPS OF ENGINEERS
JAPAN ENGINEER DISTRICT
OKINAWA, JAPAN

Jacobs
JACOBS GOVERNMENT SERVICES COMPANY
777 MAIN STREET / FORT WORTH, TX 76102
USA

FY25 REPAIR HVAC WIDEBAND SATCOM OPS B100
CAMP BUCKNER COMMUNICATIONS ANNEX
OKINAWA, JAPAN
PROJECT NUMBER:D3449305

TELECOM ELEVATIONS

SHEET ID
T-201

T T-201- T

FILE PATH: C:\Users\rubioxr\OneDrive - Jacobs\Documents\D3449305-T-3D_rene.rubio.rvt
PLOT DATE: 8/27/2025 4:11:17 PM PLOTTED BY: PLOT SCALE: NTS

BACKCHECK SUBMITTAL DESIGN

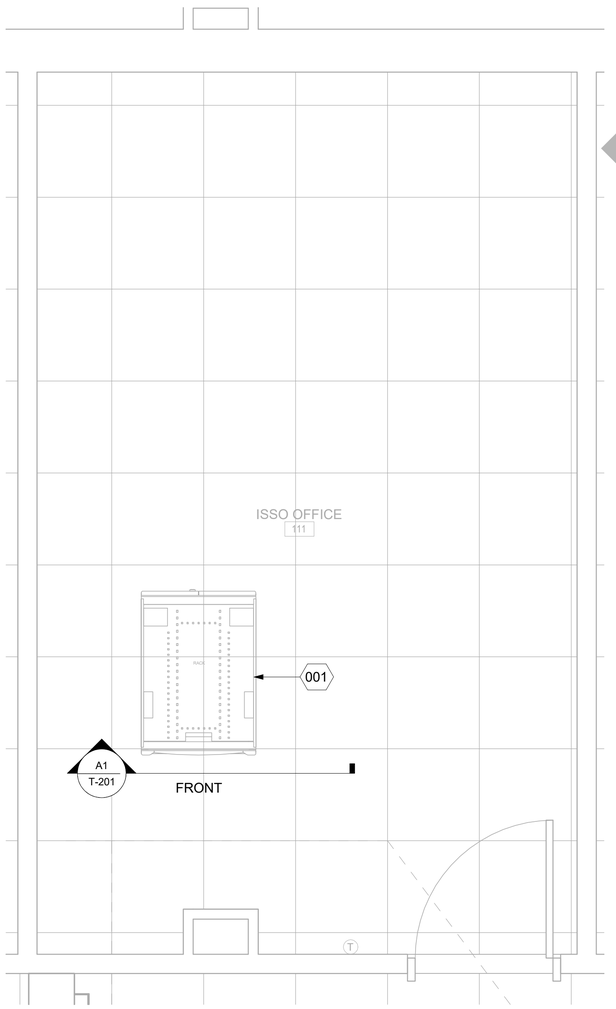

A1 ISSO OFFICE 111 - ENLARGED PLAN
1 : 20

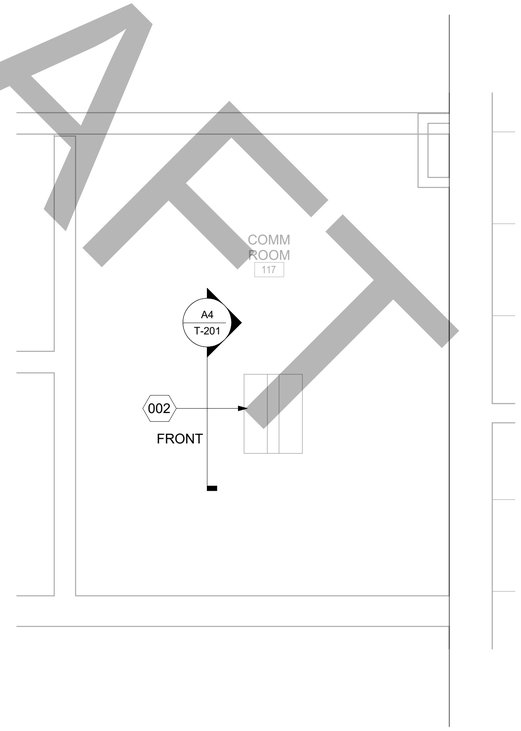

A5 COMM ROOM 117 - ENLARGED PLAN
1 : 20

DRAFT

GENERAL SHEET NOTES

A	MAINTAIN SEPARATION BETWEEN SECURE AND UNSECURE CABLING IN ACCORDINACE WITH A1/T-501.
B	TELECOMMUNICATIONS CONDUITS MUST BE BONDED TO THE PBB/SBB, BUILDING STEEL OR TO THE NEAREST CABLE TRAY.
C	REFER TO SHEETS GI010 AND GI011 FOR OVERALL PHASING INFORMATION.
D	CONTRACTOR MUST VERIFY FIELD CONDITIONS PRIOR TO START OF WORK TO INLCUDE BUT NOT LIMITED TO ROUTING OF OVERHEAD AND UNDERFLOOR CABLE TRAYS, AVAILABILITY OF PATCH PANEL AND RACK SPACE, LOCATON OF SLEEVES AND PENETRATIONS, ROUTING OF FIBER AND COPPER FEEDERS.

SHEET KEYNOTES

XX	
001	EXISTING NETWORK EQUIPMENT CABINET ENCLOSURE IN ISSO RM 111 WITH CAT6 COPPER PATCH PANEL. MAY USE FOR ADDITIONAL CONNECTIONS TO HVAC MONITORING EQUIPMENT AS REQUIRED. THE IT CABINET IS NOT PART OF DEMO.
002	EXISTING NETWORK TWO-POST EQUIPMENT RACK IN COMM ROOM 117 WITH CAT6 COPPER PATCH PANEL. THIS RACK IS NOT PART OF THE DEMOLTION SCOPE. ROOM 117 IS SUPPORTED FROM ISSO RM 111 VIA FIBER OPTIC CABLE ROUTED OVERHEAD. CARE MUST BE TAKEN TO ENSURE THAT DAMAGE DOES NOT OCCUR AND PERSONEL MUST BE PREPARED TO REMEDY DISRUPTION SHOULD IT RESULT FROM RENOVATIONS. NETWORK OPERATIONS MUST REMAIN IN CONTINUOUS SERVICE. THIS ROOM MAY BE USED FOR ADDITIONAL CONNECTIONS TO HVAC MONITORING EQUIPMENT AS REQUIRED.

KEY PLAN

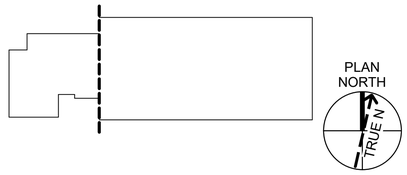

GRAPHIC SCALE(S)

0 200 400 800
SCALE: 1:20

US Army Corps of Engineers
Japan District ®

FOR REVIEW ONLY

THESE DOCUMENTS ARE FOR CONCEPT DESIGN AND NOT INTENDED FOR CONSTRUCTION, BIDDING OR PERMIT PURPOSES. THEY WERE PREPARED BY, OR UNDER SUPERVISION OF:

RENE RUBIO
NAME
112613 09/04/2025
REGISTRATION # DATE
TEXAS REGISTERED ENGINEERING FIRM F-2966

MARK	DESCRIPTION	DATE

DESIGNED BY: R. RUBIO
DRAWN BY: R. RUBIO
CHECKED BY: S. LEFFLER
SUBMITTED BY: A. GUERRA
SIZE: ISO A1
ISSUE DATE: 09/04/2025
SOLICITATION NO.:
CONTRACT NO.:
DRAWING CODE:
FILE NAME: T-401

US ARMY CORPS OF ENGINEERS
JAPAN ENGINEER DISTRICT
OKINAWA, JAPAN

Jacobs
JACOBS GOVERNMENT SERVICES COMPANY
777 MAIN STREET / FORT WORTH, TX 76102
USA

FY25 REPAIR HVAC WIDEBAND SATCOM OPS B100
CAMP BUCKNER COMMUNICATIONS ANNEX
OKINAWA, JAPAN
PROJECT NUMBER:D3449305

TELECOM ENLARGED PLANS

SHEET ID
T-401

T T-401- T

FILE PATH: C:\Users\rubioxr\OneDrive - Jacobs\Documents\D3449305-T-3D_rene.rubio.rvt
PLOT DATE: 8/27/2025 4:11:17 PM PLOTTED BY: PLOT SCALE: 1 : 20

BACKCHECK SUBMITTAL DESIGN

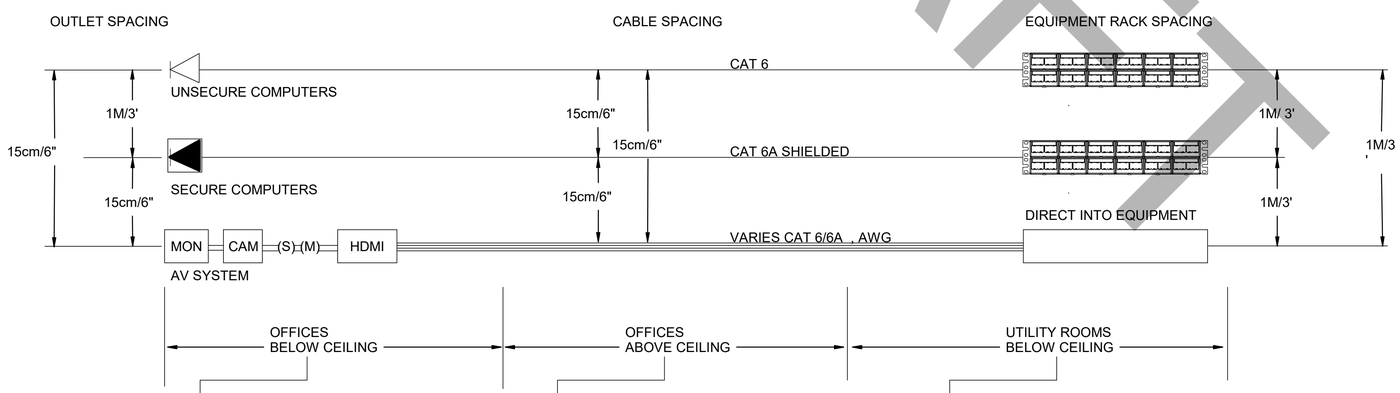

	OFFICES BELOW CEILING	OFFICES ABOVE CEILING	UTILITY ROOMS BELOW CEILING
UN-SECURE NETWORK: NON-STC / RF WALL: UN-SECURE NETWORK: STC / RF WALL:	FLUSH MOUNT INSIDE WALLS SURFACE MOUNT IN CONDUIT ON WALLS	IN RACEWAYS IN RACEWAYS	IN RACEWAYS FLUSH OR SURFACE IN RACEWAYS SURFACE
SECURE NETWORK NON-STC/RF WALL:	FLUSH MOUNT ON WALLS	ON RACEWAYS	IN RACEWAYS / CONDUIT
SECURE NETWORK SCIF STC / RF WALL:	SURFACE MOUNT WALLS / INSPECTABLE NO DOUBLE WALLS	IN RACEWAYS / INSPECTABLE	IN RACEWAYS / CONDUIT / INSPECTABLE
AV MIC (M), SPEAKER (S), MONITORS (MON) CAMERAS (CAM), HDMI CABLES	(SAME AS SECURE)	(SAME AS SECURE)	(SAME AS SECURE)

CONDUIT AND CABLE MOUNTING REQUIREMENTS

A1 RED / BLACK SEPARATION - MIN SPACING REQUIREMENTS

NTS

DRAFT

US Army Corps of Engineers
Japan District ®

FOR REVIEW ONLY

THESE DOCUMENTS ARE FOR CONCEPT DESIGN AND NOT INTENDED FOR CONSTRUCTION, BIDDING OR PERMIT PURPOSES. THEY WERE PREPARED BY, OR UNDER SUPERVISION OF:

RENE RUBIO
NAME

112613 — REGISTRATION #
09/04/2025 — DATE

TEXAS REGISTERED ENGINEERING FIRM F-2966

MARK	DESCRIPTION	DATE

DESIGNED BY: R. RUBIO
DRAWN BY: R. RUBIO
CHECKED BY: S. LEFFLER
SUBMITTED BY: A. GUERRA
SIZE: ISO A1
ISSUE DATE: 09/04/2025
SOLICITATION NO.: -
CONTRACT NO.: -
DRAWING CODE:
FILE NAME: T-501

US ARMY CORPS OF ENGINEERS
JAPAN ENGINEER DISTRICT
OKINAWA, JAPAN

Jacobs
JACOBS GOVERNMENT SERVICES COMPANY
777 MAIN STREET / FORT WORTH, TX 76102
USA

FY25 REPAIR HVAC WIDEBAND SATCOM OPS B100
CAMP BUCKNER COMMUNICATIONS ANNEX
OKINAWA, JAPAN
PROJECT NUMBER:D3449305

TELECOM DETAILS

SHEET ID
T-501

T T-501- T

FILE PATH: C:\Users\rubioxr\OneDrive - Jacobs\Documents\D3449305-T-3D_rene.rubio.rvt
PLOT DATE: 8/27/2025 4:11:18 PM PLOTTED BY: PLOT SCALE: NTS

BACKCHECK SUBMITTAL DESIGN

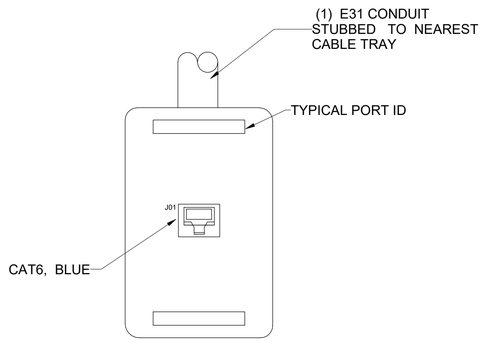

E1 TYPICAL 1-CAT6 "1N" DATA FACE PLATE (UNSECURED)
NTS

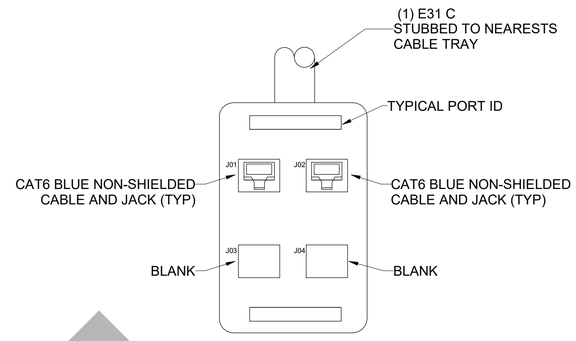

E4 TYPICAL 2-CAT6 "2N", DATA FACE PLATE (UNSECURE)
NTS

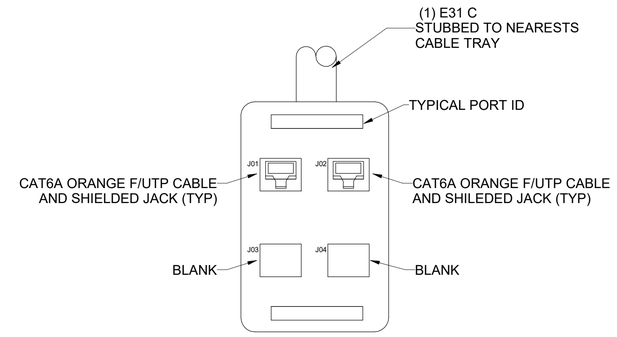

E8 TYPICAL 2-CAT6 "2S", DATA FACE PLATE (SECURE)
NTS

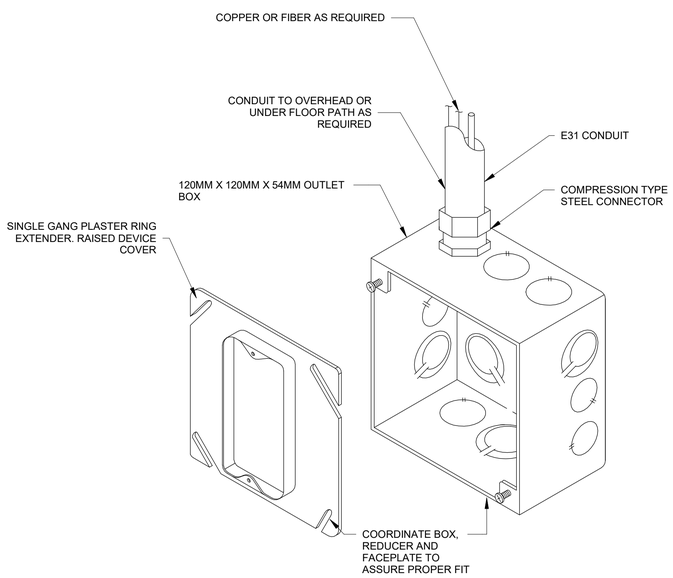

A1 WALL-MOUNTED OUTLET BOX DETAIL
NTS

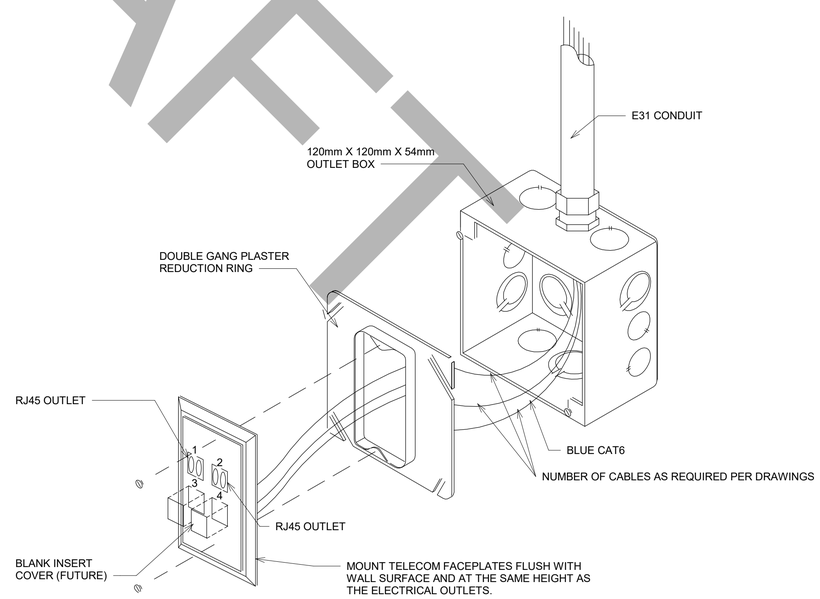

A5 TYPICAL DATA OUTLET DETAIL
NTS

DRAFT

US Army Corps of Engineers
Japan District ®

FOR REVIEW ONLY
THESE DOCUMENTS ARE FOR CONCEPT DESIGN AND NOT INTENDED FOR CONSTRUCTION, BIDDING OR PERMIT PURPOSES. THEY WERE PREPARED BY, OR UNDER SUPERVISION OF:
RENE RUBIO
NAME
112613 — REGISTRATION #
09/04/2025 — DATE
TEXAS REGISTERED ENGINEERING FIRM F-2966

MARK	DESCRIPTION	DATE

DESIGNED BY: R. RUBIO
DRAWN BY: R. RUBIO
CHECKED BY: S. LEFFLER
SUBMITTED BY: A. GUERRA
SIZE: ISO A1
ISSUE DATE: 09/04/2025
SOLICITATION NO.: -
CONTRACT NO.: -
DRAWING CODE:
FILE NAME: T-502

US ARMY CORPS OF ENGINEERS
JAPAN ENGINEER DISTRICT
OKINAWA, JAPAN
Jacobs
JACOBS GOVERNMENT SERVICES COMPANY
777 MAIN STREET / FORT WORTH, TX 76102 USA

FY25 REPAIR HVAC WIDEBAND SATCOM OPS B100
CAMP BUCKNER COMMUNICATIONS ANNEX
OKINAWA, JAPAN
PROJECT NUMBER:D3449305
TELECOM DETAILS

SHEET ID
T-502

T T-502- T

FILE PATH: C:\Users\rubioxr\OneDrive - Jacobs\Documents\D3449305-T-3D_rene.rubio.rvt
PLOT DATE: 8/27/2025 4:11:18 PM PLOTTED BY: PLOT SCALE: As indicated

BACKCHECK SUBMITTAL DESIGN

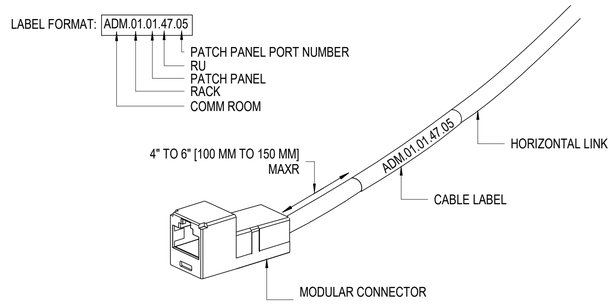

NOTES:
1. ROOM NUMBER SHOWN HERE AS EXAMPLE.
2. MODULAR CONNECTOR SHOWN FOR CLARITY, AND MAY NOT REFLECT ACTUAL CONNECTOR SPECIFIED FOR THIS PROJECT.
3. REFER TO PLANS FOR OUTLET PLACEMENT TO DERIVE CABLE ID LABELS.

E1 HORIZONTAL CABLE LABELING
NTS

NOTE:

1. TERMINAL PATCH PANELS ARE TYPICAL. SIZE, PORT COUNT AND STYLE WILL VARY BY MANUFACTURER. DIAGRAMMATIC ONLY.
2. FIRST THREE NUMERALS INDICATE THE UNIQUE OUTLET ID FOR OUTLETS. ALPHA CHARACTERS INDICATE OUTLET PORT ID.
3. UNIQUE ID NUMBER FROM THE OUTLET ID SHOWN ON FLOOR PLANS, TYPICAL
4. FOR MULTI-PORT OUTLET LOCATIONS, UNIQUE ID NUMBER IS DUPLICATED FOR EACH ADDITIONAL CABLE. SHOWN IS AN EXAMPLE OF A FOUR-PORT OUTLET.

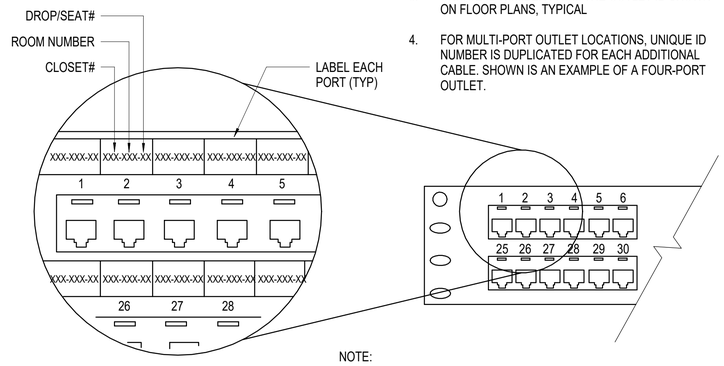

NOTE:

THE ABOVE IS AN EXAMPLE PATCH PANEL LABELING, AND IS NOT INTENDED TO BE EXACT OUTLET NUMBERING FOR THIS PROJECT.

E5 LABELING - PATCH PANEL
NTS

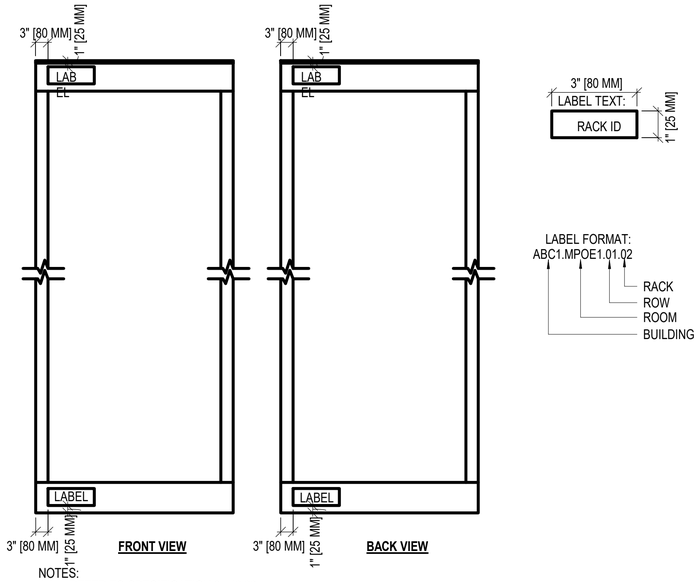

NOTES:
1. REFER TO SPECIFICATION 27 10 00 COMMUNICATIONS LABELING FOR LABEL MATERIAL.
2. LOCATE AS SHOWN ON THE LEFT SIDE OF THE RACK FACING THE FRONT AND BACK.
3. REFER TO ROOM ENLARGED PLANS FOR RACK IDs.
4. COORDINATE LABELING WITH OWNER.
5. DETAIL APPLIES TO 2-POST AND CABINET ENCLOSURES.

A1 EQUIPMENT RACK AND CABINET LABELING
NTS

568A PIN CONFIGURATION

PIN	WIRE COLOR
1	WHITE/GREEN
2	GREEN
3	WHITE/ORANGE
4	BLUE
5	WHITE/BLUE
6	ORANGE
7	WHITE/BROWN
8	BROWN

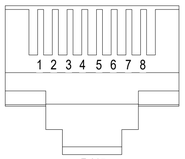

RJ45

A5 568A PIN OUT CONFIGURATION
NTS

DRAFT

US Army Corps of Engineers
Japan District ®

FOR REVIEW ONLY
THESE DOCUMENTS ARE FOR CONCEPT DESIGN AND NOT INTENDED FOR CONSTRUCTION, BIDDING OR PERMIT PURPOSES. THEY WERE PREPARED BY, OR UNDER SUPERVISION OF:
RENE RUBIO
NAME
112613 09/04/2025
REGISTRATION # DATE
TEXAS REGISTERED ENGINEERING FIRM F-2966

MARK	DESCRIPTION	DATE

DESIGNED BY: R. RUBIO
DRAWN BY: R. RUBIO
CHECKED BY: S. LEFFLER
SUBMITTED BY: A. GUERRA
SIZE: ISO A1
ISSUE DATE: 09/04/2025
SOLICITATION NO.: -
CONTRACT NO.: -
DRAWING CODE:
FILE NAME: T-503

US ARMY CORPS OF ENGINEERS
JAPAN ENGINEER DISTRICT
OKINAWA, JAPAN

Jacobs
JACOBS GOVERNMENT SERVICES COMPANY
777 MAIN STREET, FORT WORTH, TX 76102 USA

FY25 REPAIR HVAC WIDEBAND SATCOM OPS B100
CAMP BUCKNER COMMUNICATIONS ANNEX
OKINAWA, JAPAN
PROJECT NUMBER:D3449305
TELECOM DETAILS

SHEET ID
T-503

T T-503- T

FILE PATH: C:\Users\rubioxr\OneDrive - Jacobs\Documents\D3449305-T-3D_rene.rubio.rvt
PLOT DATE: 8/27/2025 4:11:18 PM PLOTTED BY: PLOT SCALE: As indicated

BACKCHECK SUBMITTAL DESIGN

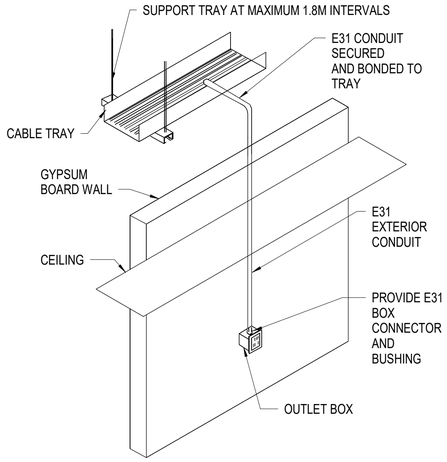

E1 TYPICAL SURFACE OUTLET DROP

NTS

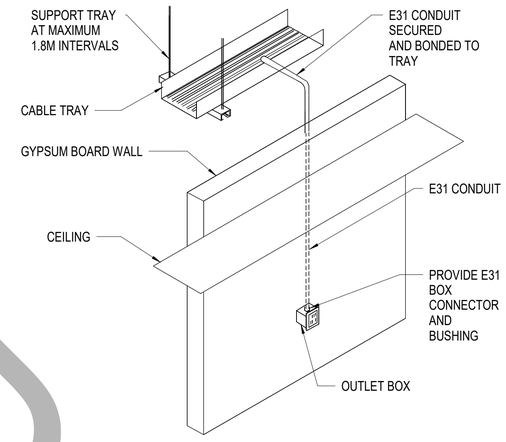

E5 TYPICAL IN WALL OUTLET DROP

NOT TO SCALE

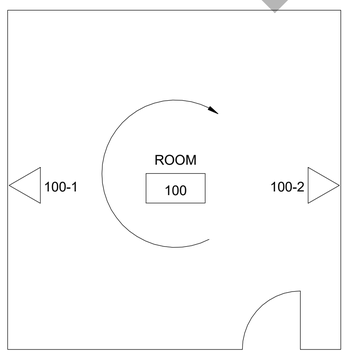

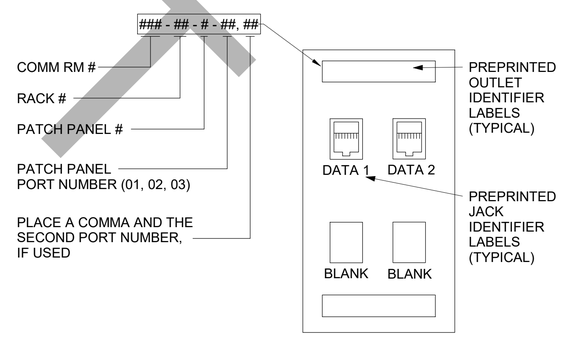

NOTE: ROOM OUTLET LABELING

1. CONFIRM OUTLET LABELING WITH OWNER.
2. NUMBER OUTLETS CLOCKWISE STARTING AT DOOR OR AS INDICATED ON DRAWINGS.
3. LABEL BOTH ENDS OF STATION CABLE.

A5 DATA OUTLET LABELING

NTS

DRAFT

US Army Corps of Engineers
Japan District ®

FOR REVIEW ONLY

THESE DOCUMENTS ARE FOR CONCEPT DESIGN AND NOT INTENDED FOR CONSTRUCTION, BIDDING OR PERMIT PURPOSES. THEY WERE PREPARED BY, OR UNDER SUPERVISION OF:

RENE RUBIO
NAME

112613 — REGISTRATION #
09/04/2025 — DATE

TEXAS REGISTERED ENGINEERING FIRM F-2966

MARK	DESCRIPTION	DATE

DESIGNED BY: R. RUBIO
DRAWN BY: R. RUBIO
CHECKED BY: S. LEFFLER
SUBMITTED BY: A. GUERRA
SIZE: ISO A1
ISSUE DATE: 09/04/2025
SOLICITATION NO.:
CONTRACT NO.:
DRAWING CODE:
FILE NAME: T-504

US ARMY CORPS OF ENGINEERS
JAPAN ENGINEER DISTRICT
OKINAWA, JAPAN

Jacobs
JACOBS GOVERNMENT SERVICES COMPANY
777 MAIN STREET / FORT WORTH, TX 76102
USA

FY25 REPAIR HVAC WIDEBAND SATCOM OPS B100
CAMP BUCKNER COMMUNICATIONS ANNEX
OKINAWA, JAPAN
PROJECT NUMBER:D3449305

TELECOM DETAILS

SHEET ID
T-504

T T-504- T

FILE PATH: C:\Users\rubioxr\OneDrive - Jacobs\Documents\D3449305-T-3D_rene.rubio.rvt
PLOT DATE: 8/27/2025 4:11:18 PM PLOTTED BY: PLOT SCALE: NTS

BACKCHECK SUBMITTAL DESIGN

NOTES:

1. NO WORK ASSOCIATED WITH THE EXISTING TELECOMMUNICATIONS NETWORK.
2. PROTECT NETWORK TO ENSURE CONTINUOUS SERVICE DUIRING PHASED CONSTRUCTION BY OTHER TRADES - REFERENCE PROJECT PHASING SCHEDULE.
3. REFERENCE T-102 AND T-103 FOR ADDITIONAL DETAILS.

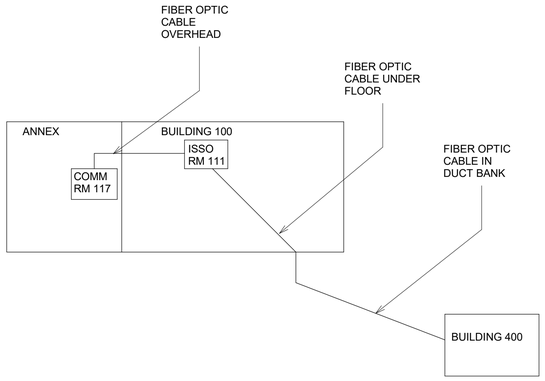

A1 FIBER RISER DIAGRAM (E) - PHASING
NTS

DRAFT

US Army Corps of Engineers
Japan District ®

FOR REVIEW ONLY

THESE DOCUMENTS ARE FOR CONCEPT DESIGN AND NOT INTENDED FOR CONSTRUCTION, BIDDING OR PERMIT PURPOSES. THEY WERE PREPARED BY, OR UNDER SUPERVISION OF:

RENE RUBIO
NAME

112613 — REGISTRATION #
09/04/2025 — DATE

TEXAS REGISTERED ENGINEERING FIRM F-2966

MARK	DESCRIPTION	DATE

DESIGNED BY: R. RUBIO
DRAWN BY: R. RUBIO
CHECKED BY: S. LEFFLER
SUBMITTED BY: A. GUERRA
SIZE: ISO A1
ISSUE DATE: 09/04/2025
SOLICITATION NO.: -
CONTRACT NO.: -
DRAWING CODE:
FILE NAME: T-601

US ARMY CORPS OF ENGINEERS
JAPAN ENGINEER DISTRICT
OKINAWA, JAPAN

Jacobs
JACOBS GOVERNMENT SERVICES COMPANY
777 MAIN STREET / FORT WORTH, TX 76102
USA

FY25 REPAIR HVAC WIDEBAND SATCOM OPS B100
CAMP BUCKNER COMMUNICATIONS ANNEX
OKINAWA, JAPAN
PROJECT NUMBER:D3449305

TELECOM RISER DIAGRAM

SHEET ID
T-601

T T-601- T