US Army Corps
of Engineers®
Nashville District

Plans For
Barkley Lock
Emergency Gate Lifting Machinery Inspection

Barkley Lock and Dam
Cumberland River
Lyon County, Kentucky

XXXXXXXXXXXX
November 2025
Certified Final Documents - RTA

REFERENCE DRAWINGS:

Q9-20/63.1	MISC. METALS, ARMOR, RECESS, FRAMES, AND COVERS
Q9-31/1.4	UPSTREAM EMERGENCY GATE HOIST - ASSEMBLY
Q9-31/2.3	UPSTREAM EMERGENCY GATE HOIST - DRUM ASSEMBLY AND DETAILS
Q9-31/3.3	UPSTREAM EMERGENCY GATE HOIST - BEARINGS AND BUSHINGS
Q9-31/4.3	UPSTREAM EMERGENCY GATE HOIST - GEARS, PINION SHAFTS AND EQUIPMENT DETAILS
Q9-31/5.3	UPSTREAM EMERGENCY GATE HOIST - MACHINERY BASE
Q9-31/6.3	UPSTREAM EMERGENCY GATE HOIST - MACHINERY BASE SUPPORT
Q9-31/7.3	UPSTREAM EMERGENCY GATE HOIST - IDLER SHEAVE AND DETAILS
Q9-31/10.3	UPSTREAM EMERGENCY GATE HOIST - MISC. CONTROL EQUIPMENT AND DETAILS
Q9-31/11.2	UPSTREAM EMERGENCY GATE HOIST - MACHINERY SUPPORTS
Q9-31/13	UPSTREAM EMERGENCY GATE HOIST - WIRE ROPE ASSEMBLY REPLACEMENT

Note:

(1.) This project was designed by the Nashville District of the U.S. Army Corps of Engineers. The initials or signatures and registration designations of individuals appear on these project documents within the scope of their employment as required by ER 1110-1-8152.

(2.) The approval signatures appearing in the signature block on this sheet constitute approval of all drawings listed in the sheet index.

Submitted:

RASSOVSKY.STEPHANIE.G.1556538243 Digitally signed by RASSOVSKY.STEPHANIE.G.1556538243
Date: 2025.11.25 10:56:16 -06'00'

Stephanie G. Rassovsky
Project Engineer

Approval Recommended:

Steven J Duncan, P. E.
Chief, Mechanical Section

Approved:

Zachary A. Langel, P.E.
Chief, Design Branch

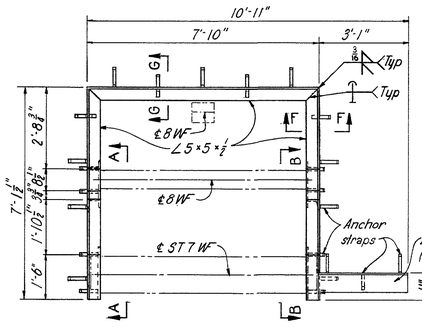

RECESS FRAME
MK. 20/63-1 R/L
ONE RIGHT- ONE LEFT
STRUCT. STEEL
EST. WT. EA. 580 LBS.

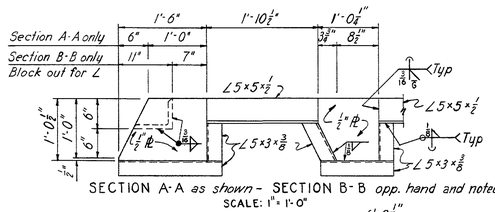

SECTION A-A as shown - SECTION B-B opp. hand and noted
SCALE: 1" = 1'-0"

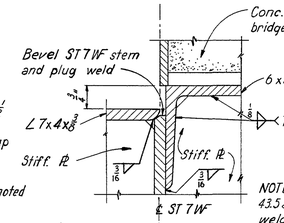

DETAIL B
HALF SCALE

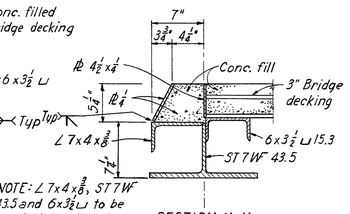

NOTE: ∠7x4x⅜, ST7WF 43.5 and 6x3½ ⊔ to be weldable quality steel, type II

SECTION H-H
SCALE: 1½" = 1'-0"

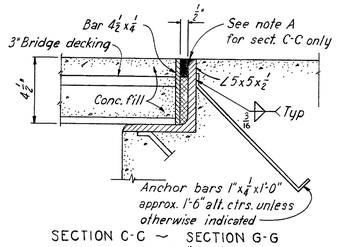

SECTION C-C ~ SECTION G-G
SCALE: 3" = 1'-0"

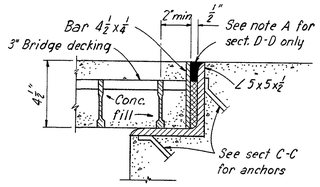

SECTION D-D ~ SECTION F-F
SCALE: 3" = 1'-0"

NOTE A: Pack with oakum and top with 1½" waterproof filling compound to make weather tight joint

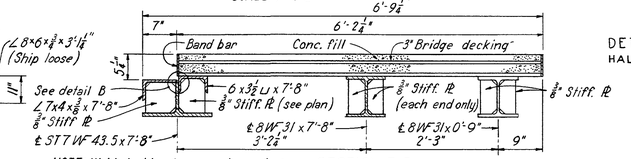

NOTE: Weld decking to support members as recommended by manufacturer

SECTION E-E
SCALE: 1" = 1'-0"

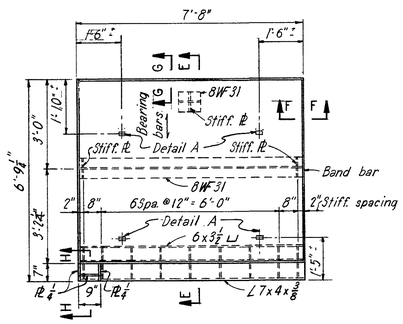

RECESS COVER
MK. 20/63-1C R/L
ONE RIGHT- ONE LEFT
STRUCT. STEEL
EST. WT. EA. 4,330 LBS.

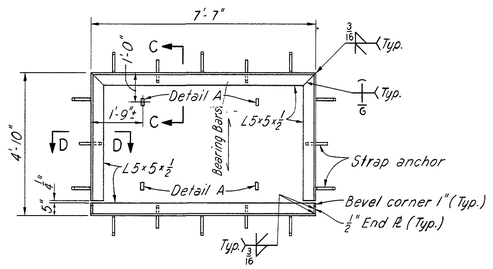

RECESS COVER & FRAME
MK. 20/63-2C & MK. 20/63-2F
2 EACH REQD.
STRUCT. STEEL
EST. WT. EA. {2240 LBS COVER, 420 LBS FRAME}

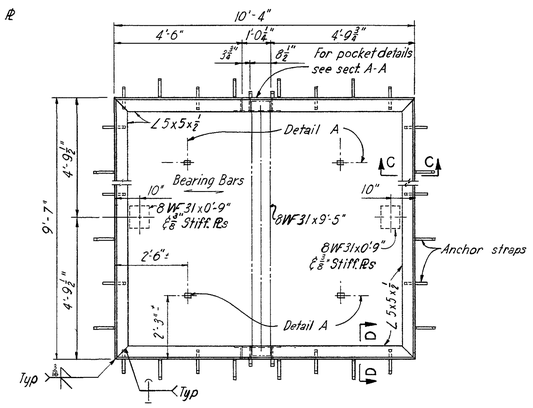

RECESS COVER & FRAME
MK. 20/63-3C & MK. 20/63-3F
2 EACH REQD.
STRUCT. STEEL
EST. WT. EA. {6,570 LBS. COVER, 720 LBS. FRAME}

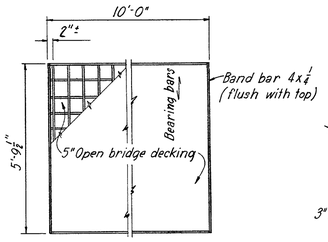

RECESS GRATING
MK. 20/63-4
2 REQD.
STRUCT. STEEL
EST. WT. EA. 1158 LBS

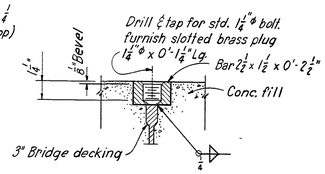

DETAIL A
SCALE: 3" = 1'-0"

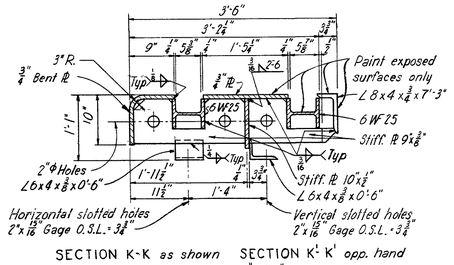

SECTION K-K as shown SECTION K'-K' opp. hand
SCALE: 1" = 1'-0"

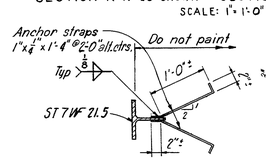

SECTION J-J
SCALE: 1" = 1'-0"

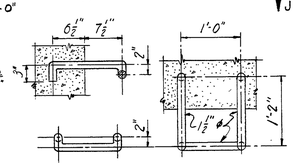

LADDER RUNGS
MK. 20/63-10
REQ'D.
STRUCT. STEEL
EST. WT. EA. 25 LBS.
SCALE: 1½" = 1'-0"

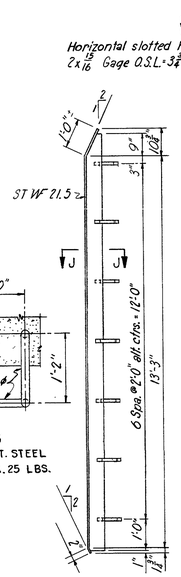

MK. 20/63-5
4 REQ'D.
EST. WT. EA. 309 LBS.

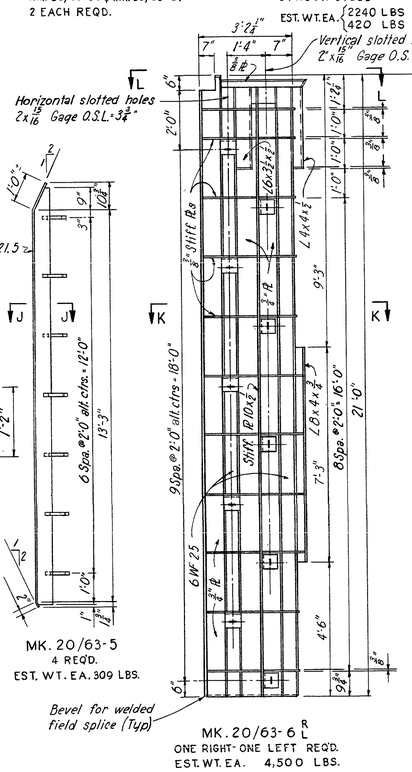

MK. 20/63-6 R/L
ONE RIGHT- ONE LEFT REQ'D.
EST. WT. EA. 4,500 LBS.

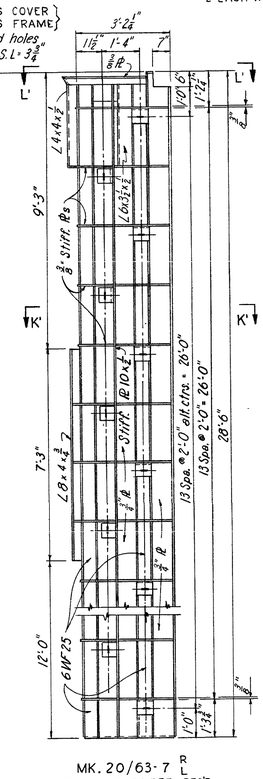

MK. 20/63-7 R/L
ONE RIGHT- ONE LEFT REQ'D
EST. WT. EA. 5,600 LBS.

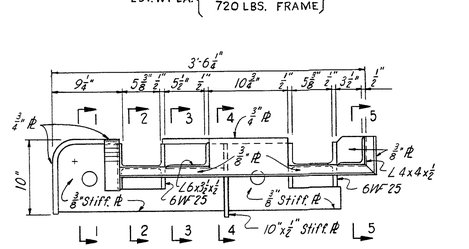

VIEW L-L as shown - VIEW L'-L' opp. hand
SCALE: 1½" = 1'-0"

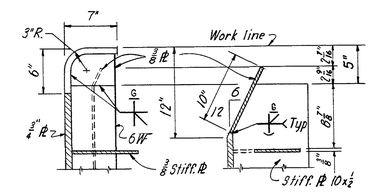

SECTION 1-1 SECTION 4-4
SCALE: 1½" = 1'-0"

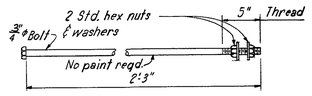

ANCHOR BOLT
MK. 20/63-9
8 REQ'D.
BOLT STEEL
EST. WT. EA. 3.6 LBS.
SCALE: 1½" = 1'-0"

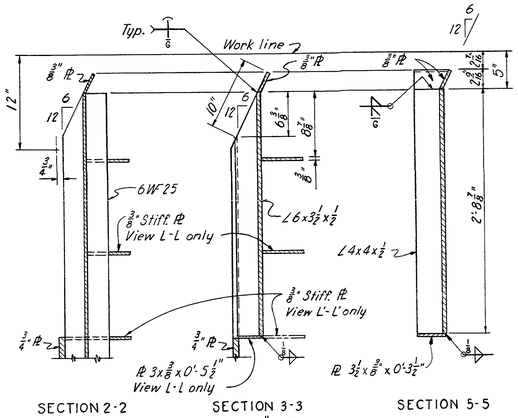

SECTION 2-2 SECTION 3-3 SECTION 5-5
SCALE: 1½" 1'-0"

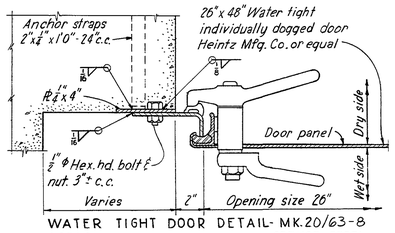

WATER TIGHT DOOR DETAIL - MK. 20/63-8
4 REQ'D.
STRUCT. STEEL
SCALE: 3" = 1'-0"

NOTES:
1. For general notes see Dwg. 20/60
2. All struct. steel to conform to Fed. spec. QQ-S-741 Type I unless noted
3. Seating surface of forms shall form a plane to provide full bearing support of covers and grating
4. Direction of bridge decking bearing bars indicated thus.
5. All work on this drawing will be paid for under Item No. 48.

REVISION	DATE	DESCRIPTION	BY	CHKD.
1	6-27-86	Field Verified - No Changes	JRL	JPT

GRAPHIC SCALE 12" 0 1' 2' 3' 4' 5

CORPS OF ENGINEERS, U. S. ARMY
OFFICE OF THE DISTRICT ENGINEER
NASHVILLE, TENNESSEE, DISTRICT

DRAWN: BRC
CHECKED:
TRACED:
COMPARED:
ENGINEER

CUMBERLAND RIVER
KENTUCKY AND TENNESSEE
BARKLEY DAM PROJECT
LOCK
MISCELLANEOUS METALS
ARMOR, RECESS FRAMES & COVERS

SUBMITTED: CHIEF, DESIGN BRANCH
APPROVAL RECOMMENDED: CHIEF, ENGINEERING DIVISION
APPROVED: COLONEL, C. E. DISTRICT ENGINEER
DATE: NOVEMBER 1961
SCALE: 1/2" = 1'-0" SPEC. NO. GIVENG-40-058-62-12
DRAWING NUMBER
SHEET OF Q9-20/63.1
RECORD DRAWING AS CONSTRUCTED

EAM FILE COPY IRVINE, CA MANAGER ET1104

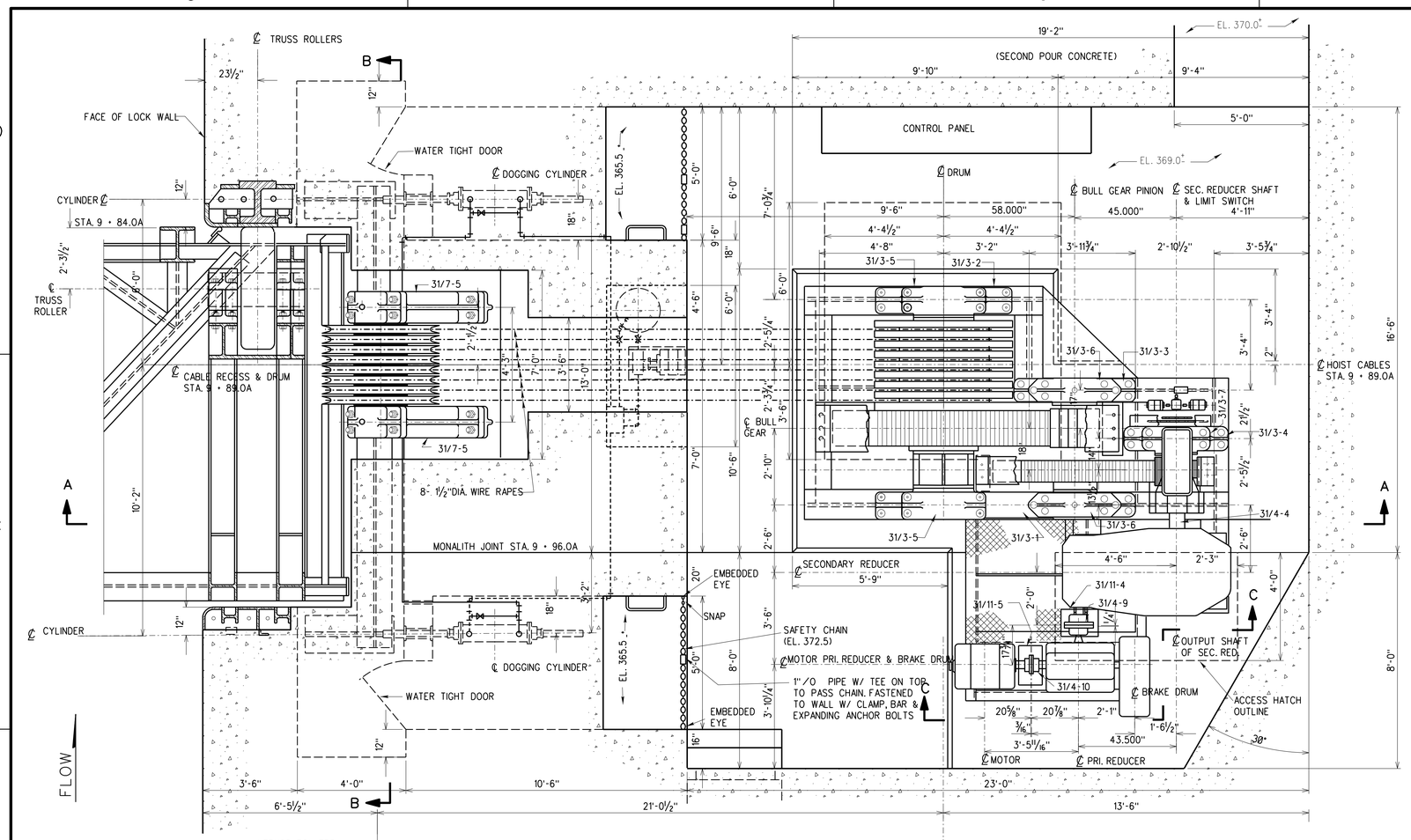

PLAN -RIVER WALL

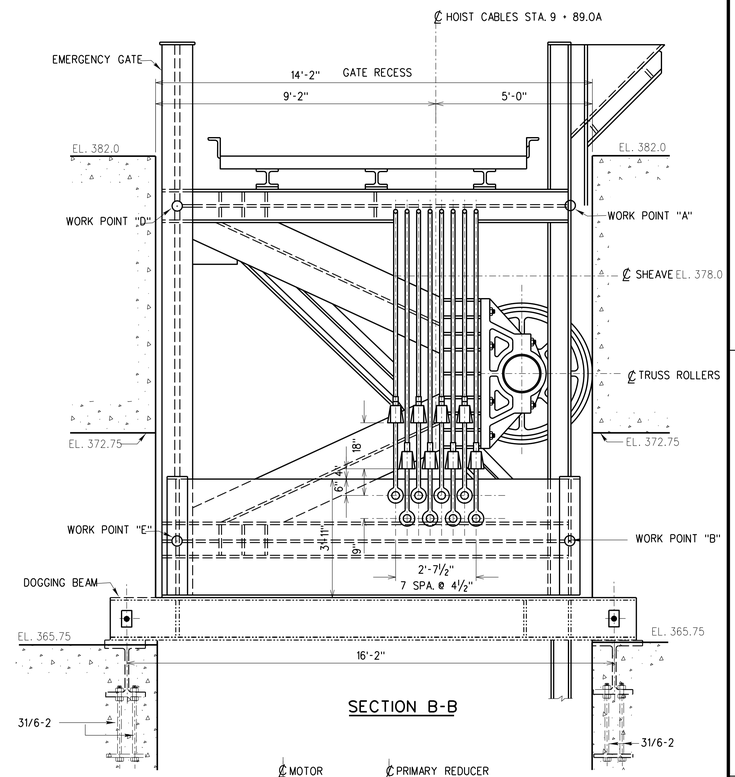

SECTION B-B

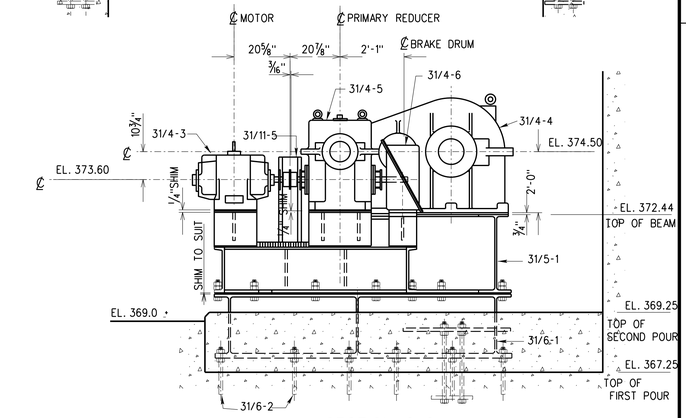

SECTION C-C

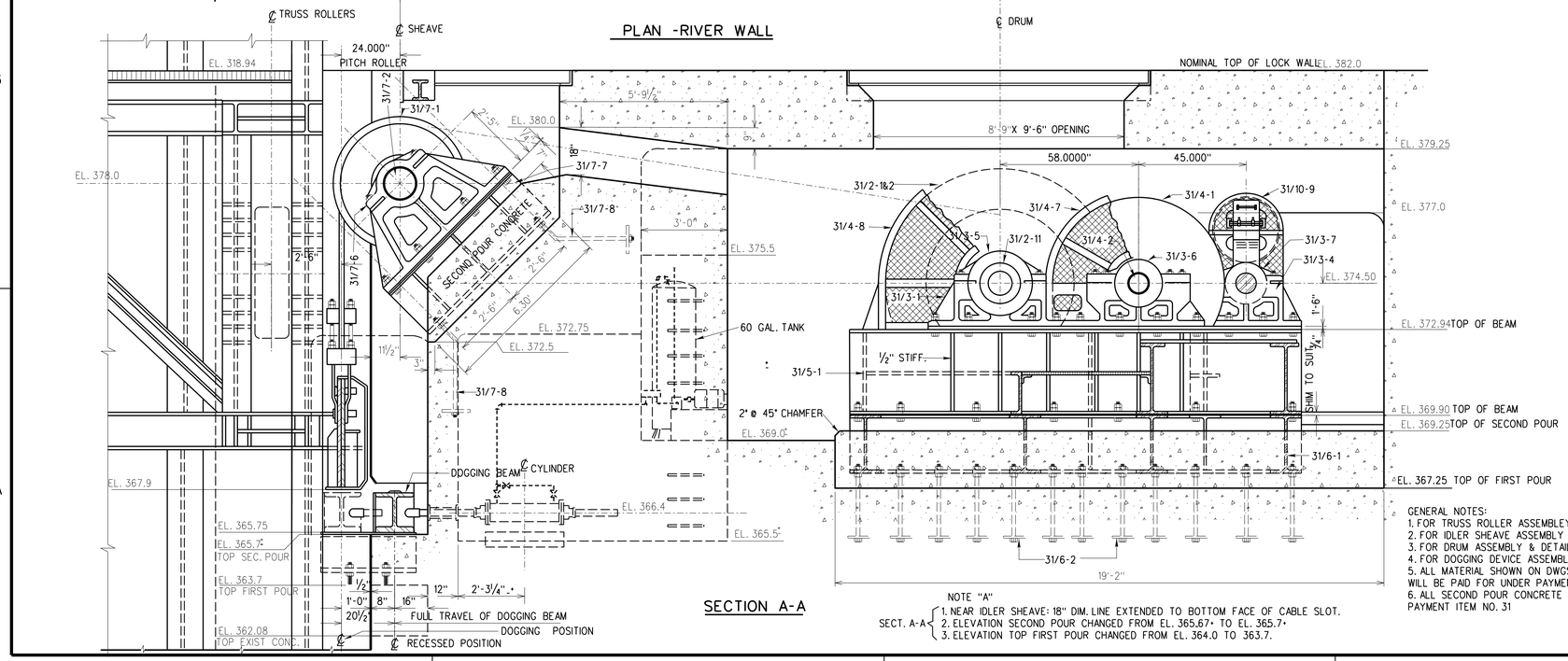

SECTION A-A

GENERAL NOTES:
1. FOR TRUSS ROLLER ASSEMBLEY & DETAILS SEE DWG. Q9-30/5
2. FOR IDLER SHEAVE ASSEMBLY & DETAILS SEE DWG. Q9-31/7
3. FOR DRUM ASSEMBLY & DETAILS SEE DWG. Q9-31/2
4. FOR DOGGING DEVICE ASSEMBLY & DETAILS SEE DWG. Q9-31/8 & 3/9
5. ALL MATERIAL SHOWN ON DWGS. Q9-31/1 THRU Q9-31/11 WILL BE PAID FOR UNDER PAYMENT ITEM NO. 50.
6. ALL SECOND POUR CONCRETE WILL BE PAID FOR UNDER PAYMENT ITEM NO. 31

NOTE "A"
SECT. A-A
1. NEAR IDLER SHEAVE: 18" DIM. LINE EXTENDED TO BOTTOM FACE OF CABLE SLOT.
2. ELEVATION SECOND POUR CHANGED FROM EL. 365.67± TO EL. 365.7±
3. ELEVATION TOP FIRST POUR CHANGED FROM EL. 364.0 TO 363.7.

REVISIONS

REV.	DESCRIPTION	DATE	BY	APPROVED
1	REVISED TO CONFORM WITH (AMEND # 1) SEE NOTE "A"	2- 8-62	CAC	CHB
2	REVISED RECESS ON PLAN AND SECTION A-A	2-14-64	AMS	CHB
3	REVISED AS CONSTRUCTED	8-16-66		CHR
4	REVISED TO SHOW UPDATED AS CONSTRUCTED STATUS	6-27-86	RJ	FLH

US Army Corps of Engineers Nashville District

U.S. ARMY ENGINEER DISTRICT
CORPS OF ENGINEERS
NASHVILLE, TENNESSEE

Drawn By: C.A.C.
Checked By: FLH
C.H. RUSSEL
ENGINEER

CUMBERLAND RIVER
KENTUCKY AND TENNESSEE
BARKLEY DAM PROJECT
LOCK

UPSTREAM EMERGENCY GATE HOIST ASSEMBLY

Approved By:
G. PRADOS
CHIEF, DESIGN BRANCH
V. P. CARLSON
CHIEF, ENG. AND PLAN. DIV.

Date: NOVEMBER 1961
Scale: ½" = 1'-0"
Record Drawing as constructed dated
Drawing Number **Q9-31/1.4**

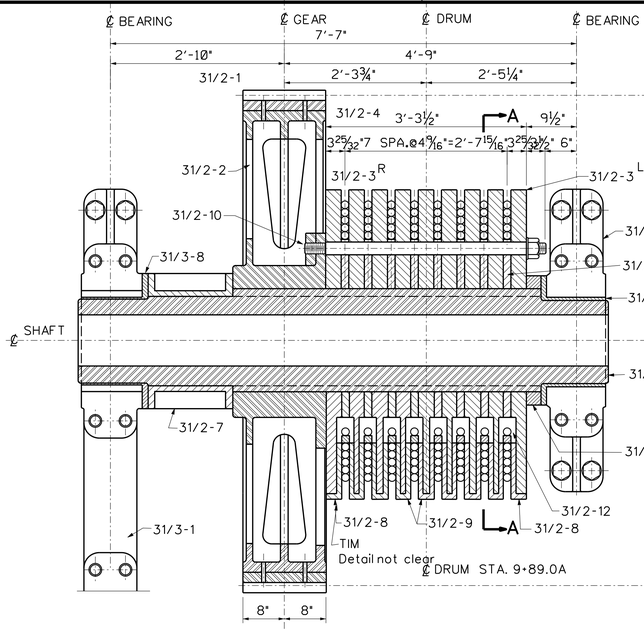

ASSEMBLY

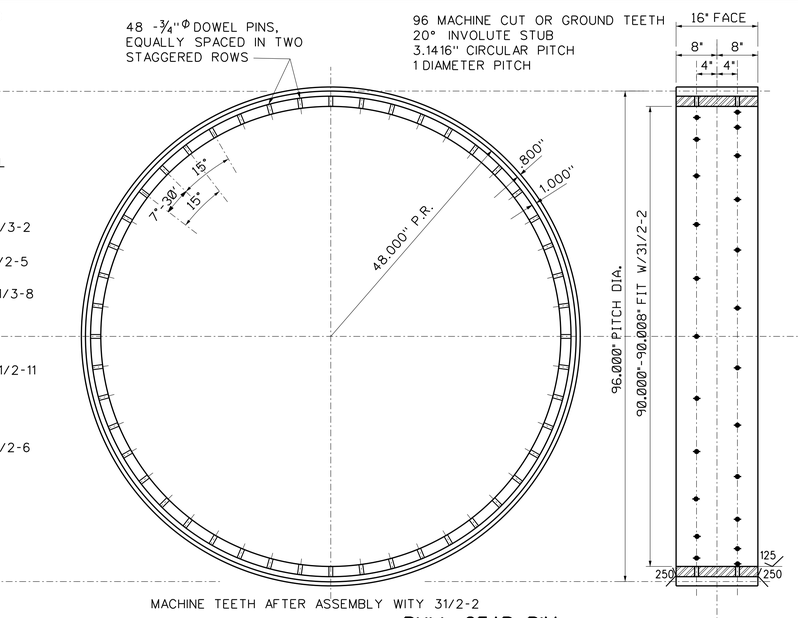

MACHINE TEETH AFTER ASSEMBLY WITY 31/2-2

BULL GEAR RIM

MARK 31/2-1 FST ASTM A290-60T CL.D
MAKE 2 EST. WT. 3980LB. EACH

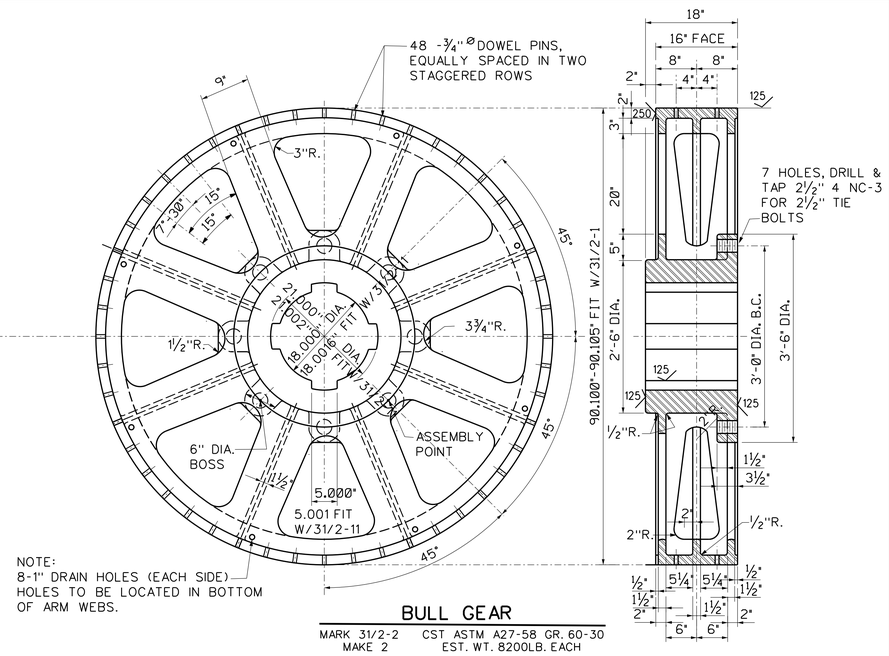

NOTE:
8-1" DRAIN HOLES (EACH SIDE)
HOLES TO BE LOCATED IN BOTTOM OF ARM WEBS.

BULL GEAR

MARK 31/2-2 CST ASTM A27-58 GR. 60-30
MAKE 2 EST. WT. 8200LB. EACH

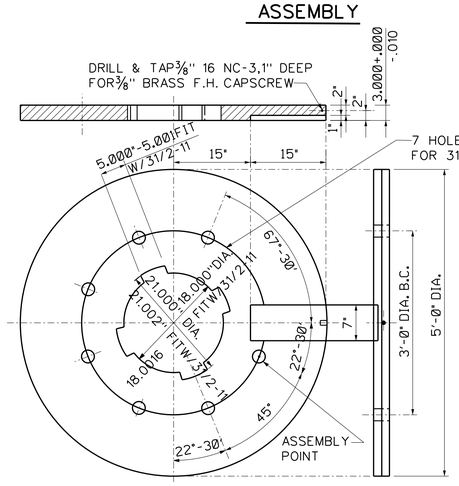

END DRUM PLATE

MARK 31/2-3 STRUC. ST. ASTM A373-58T
MAKE 2R EST. WT. 2110 LB. EACH
2L

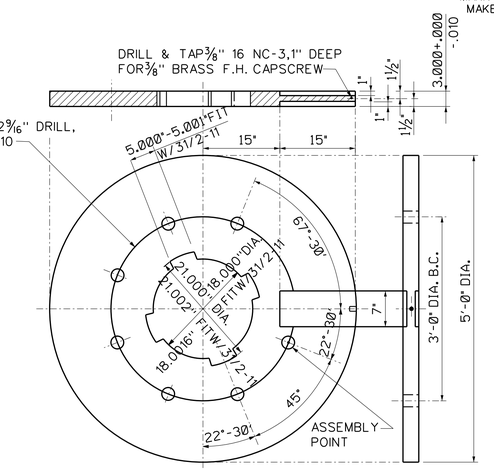

INTERMEDIATE DRUM PLATE

MARK 31/2-4 STRUC. ST. ASTM A373-58T
MAKE 14 EST. WT. 2080 LB. EACH

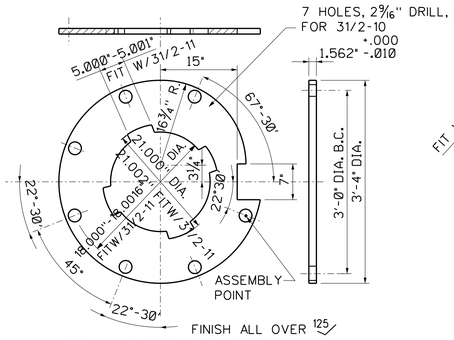

DRUM ROPE SPACER

MARK 31/2-5 STRUC. ST. ASTM A373-58T
MAKE 16 EST. WT. 388 LB. EACH

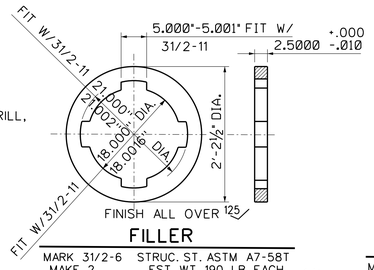

FILLER

MARK 31/2-6 STRUC. ST. ASTM A7-58T
MAKE 2 EST. WT. 190 LB. EACH

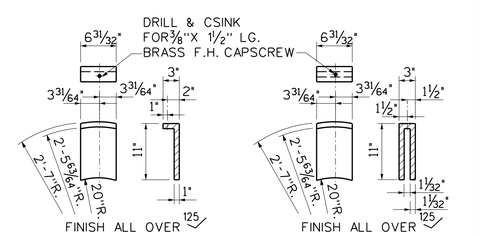

END ANCHOR KEY INTERMEDIATE ANCHOR KEY

MARK 31/2-8 ST ASTM A373-58T
MAKE 4 EST. WT. 26 LB. EACH
MARK 31/2-9 ST ASTM A373-58T
MAKE 14 EST. WT. 45 LB. EACH

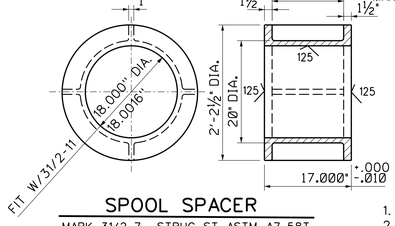

SPOOL SPACER

MARK 31/2-7 STRUC. ST. ASTM A7-58T
MAKE 2 EST. WT. 441 LB. EACH

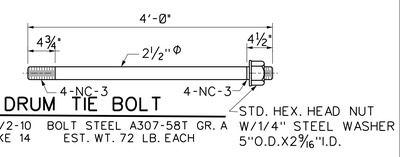

DRUM TIE BOLT

MARK 31/2-10 BOLT STEEL A307-58T GR. A
MAKE 14 EST. WT. 72 LB. EACH

STD. HEX. HEAD NUT W/1/4" STEEL WASHER 5"O.D.X2⅜"I.D.

GENERAL NOTES:

UNLESS OTHERWISE NOTED.

1. QUANTITIES SHOWN ARE FOR ONE EMERGENCY GATE.
2. MACHINE FINISH SYMBOLS & TOLERANCES ARE ASA STANDARDS.
3. ALL EDGES SHOWN SHARP TO HAVE A RADIUS OF .02".
4. ALL EDGES SHOWN ROUND TO HAVE A RADIUS OF .25".
5. ALL DIMENSIONS SHOWN ARE FOR FINISHED ASSEMBLIES.

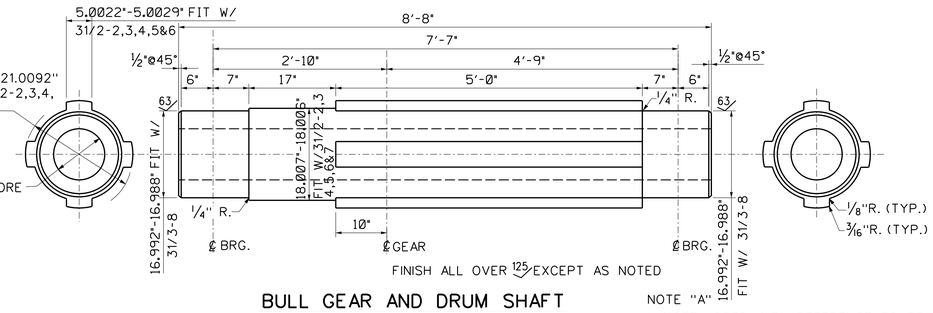

BULL GEAR AND DRUM SHAFT

MARK 31/2-11 FST. ASTM A237-55CL.C
MAKE 2 EST. WT. 5500 LB. EACH

NOTE "A"

31/2-2
1. NOTE ADDED WITH REFERENCE TO DRAIN HOLES.
2. 125 FINISH ADDED TO SHAFT BORE.
3. EST. WT. CHANGED FROM 8890# TO 8200#.

31/2-11
1. CHANGED DIM. 18.000"CL-LT-1 FIT TO 18.000" CL-FNH FIT.
2. EST. WT. CHANGED FROM 5780# TO 5500#.

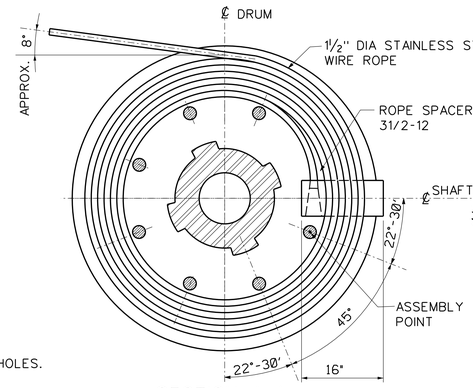

SECTION A-A

ASSEMBLED VIEW OF DRUM WITH EMERGEMCY GATE IN UP POSITION

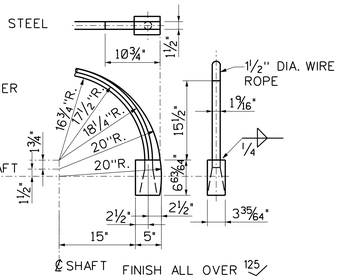

WIRE ROPE SPACER

MARK 31/2-12 HRS. ASTM A107-59T
MAKE 16 EST. WT. 32 LB. EACH

REVISIONS

REV.	DESCRIPTION	DATE	BY	APPROVED
3	FIELD VERIFIED-NO CHANGES	6-27-86	E.H	F.L.H.
2	REVISED AS CONSTRUCTED.	8-16-66		C.H.R.
1	REVISED TO CONFORM W/(AMEND NO.1)SEE NOTE "A"	2-8-62	C.A.O.	C.H.R.

US Army Corps of Engineers Nashville District

U.S. ARMY ENGINEER DISTRICT
CORPS OF ENGINEERS
NASHVILLE, TENNESSEE

CUMBERLAND RIVER
KENTUCKY AND TENNESSEE
BARKLEY DAM PROJECT
LOCK
UPSTREAM EMERGENCY GATE HOIST DRUM ASSEMBLY AND DETAILS

Drawn By: A.M.S.
Checked By: C.H.R.
CH RUSSELS, ENGINEER
Approved By: G. PRADOS, CHIEF, DESIGN BRANCH
VINCIENT P.LARLSON, CHIEF, ENG. AND PLAN. DIV.
Date: NOVEMBER 1961
Scale: 1" = 1'-0"
Record Drawing as constructed dated
Drawing Number **Q9-31/2.3**

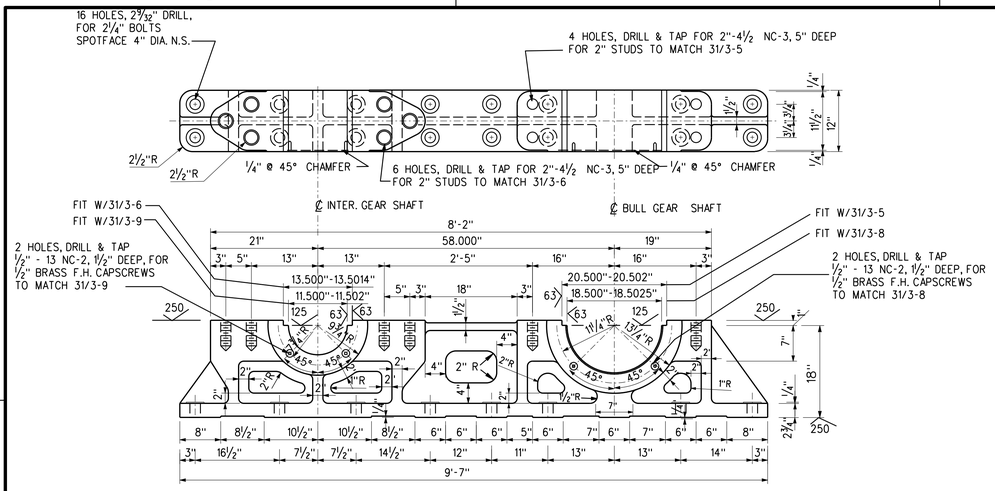

BEARING

MARK 31/3-1 — CST ASTM A148-58 GR. 80-40
MAKE 1 AS SHOWN — EST. WT. 3200 LB. EACH
MAKE 1 OPP. HAND

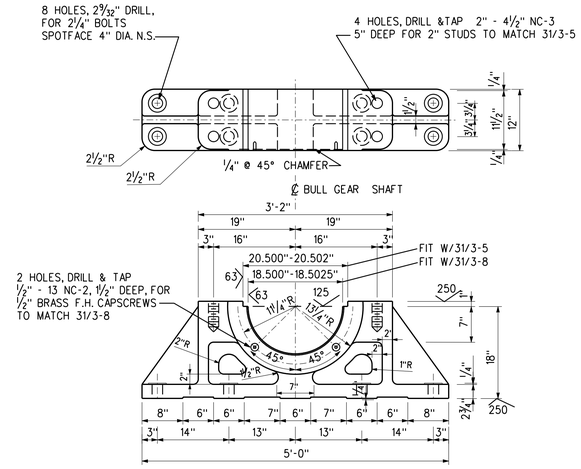

BEARING

MARK 31/3-2 — CST ASTM A148-58 GR. 80-40
MAKE 2 — EST. WT. 1530 LB. EACH

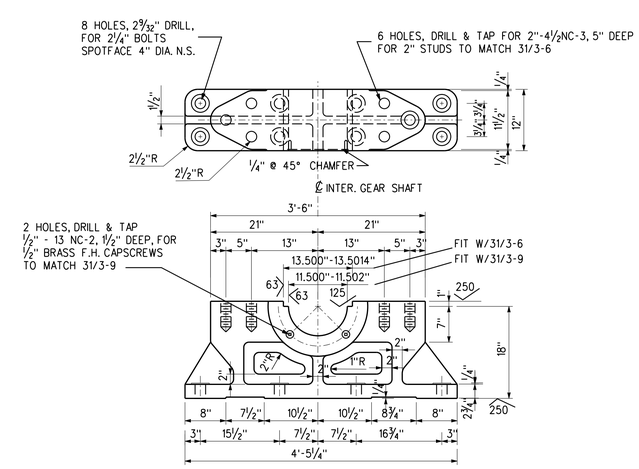

BEARING

MARK 31/3-3 — CSTM A148-58 GR. 80-40
MAKE 1 AS SHOWN — EST. WT. 1530 LB. EACH
MAKE 1 OPP. HAND

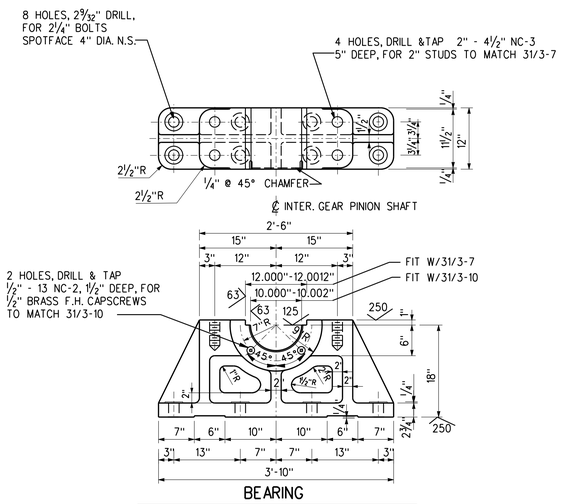

BEARING

MARK 31/3-4 — CST ASTM A148-58 GR. 80-40
MAKE 2 — EST. WT. 1285 LB. EACH

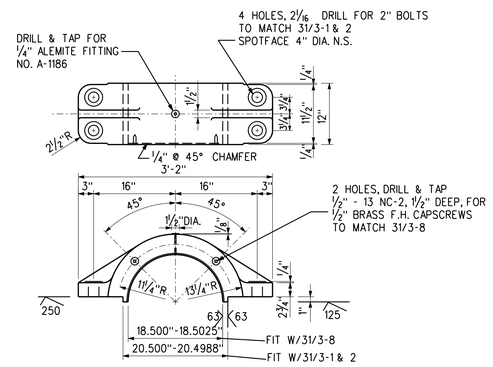

BEARING CAP

MARK 31/3-5 — CSTM A148-58 GR. 80-40
MAKE 4 — EST. WT. 521 LB. EACH

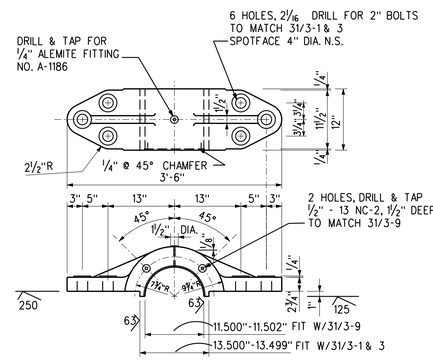

BEARING CAP

MARK 31/3-6 — CSTM A148-58 GR. 90-60
MAKE 4 — EST. WT. 460 LB. EACH

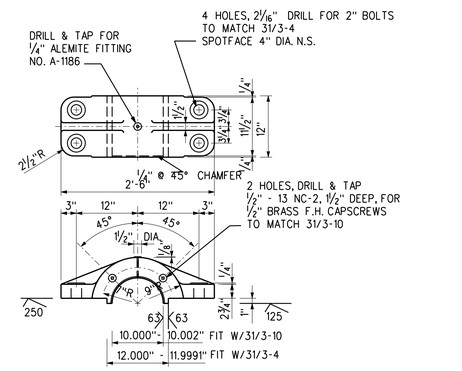

BEARING CAP

MARK 31/3-7 — CSTM A148-58 GR. 80-40
MAKE 2 — EST. WT. 400 LB. EACH

GENERAL NOTES:

1. QUANTITIES SHOWN ARE FOR ONE EMERGENCY GATE.
2. MACHINING SYMBOLS ARE ASA SURFACE FINISH STANDARDS.
3. ANCHOR BOLTS AND STUDS FOR BEARINGS TO BE MACHINED FROM CLASS "A" BOLT MATERIAL.

31/3-1, 31/3-1,2,3,4,5,6 &7:
1. EST. WT. CHANGED FROM 3420# TO 3200#
1. IN PLAN VIEW: NOTE 1/4" @ 45° CHAMFER ADDED AT BEARING BORE NEAR SIDE ONLY.

31/3-4:
1. LEADER ARROW ADDED TO HOLES IN BEARING BASE. 4 IN LIEU OF 2 HOLES FOR 2" STUDS IN NOTE.
2. 1/4" DIMENSION ADDED AT BEARING BASE FOR BOSS OFFSET.

31/3-6:
1. IN PLAN VIEW: MATCH MARKS FOR 2" BOLTS CHANGED FROM 31/3-3 TO 31/3-1 & 3
2. EST.WT. CHANGED FROM 395# TO 460#

31/3-7:
1. IN ELEV. BEARING OFFSET DIMENSION CHANGED TO READ 12.000"
2. EST. WT. CHANGED FROM 336# TO 400#

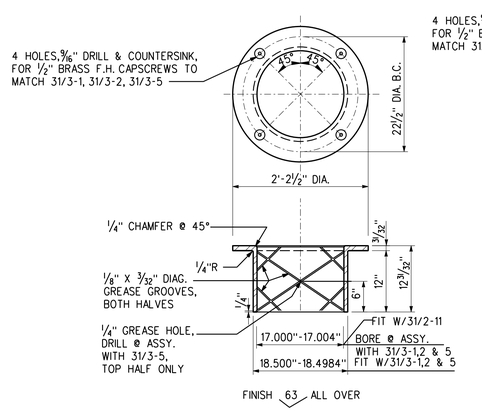

SPLIT BUSHING

MARK 31/3-8 — CBRZ ASTM B143-52, ALLOY 2B
MAKE 4 — EST. WT. 240 LB. EACH

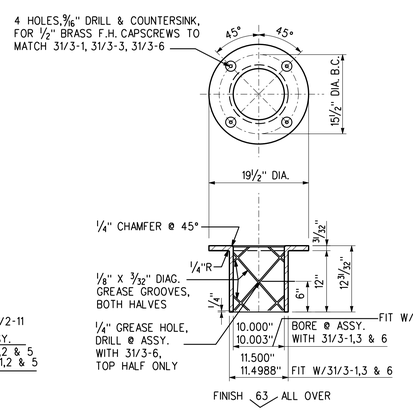

SPLIT BUSHING

MARK 31/3-9 — CBRZ ASTM B143-52, ALLOY 2B
MAKE 4 — EST. WT. 152 LB. EACH

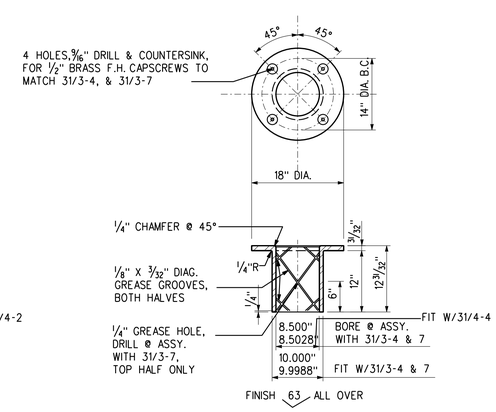

SPLIT BUSHING

MARK 31/3-10 — CBRZ ASTM B143-52, ALLOY 2B
MAKE 2 — EST. WT. 133 LB. EACH

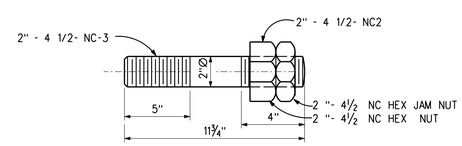

STUD

MARK 31/3-11 — BOLT STL.ASTM A307-58 GR. A
MAKE 48 — EST. WT. 15 LBS. EACH

SCALE: 3" = 1'-0"

REVISIONS

REV.	DESCRIPTION	DATE	BY	APPROVED
3	FIELD VERIFIED - NO CHANGES	6-27-86	EH	FLH
2	REVISED AS CONSTRUCTED	8-16-66		CHB
1	REVISED TO CONFORM WITH (AMEND. NO. 1) SEE NOTE "A"	2- 8-62	CAC	CHB

12" 6" 0 1'

US Army Corps of Engineers Nashville District

U.S. ARMY ENGINEER DISTRICT
CORPS OF ENGINEERS
NASHVILLE, TENNESSEE

CUMBERLAND RIVER
KENTUCKY AND TENNESSEE
BARKLEY DAM PROJECT
LOCK

UPSTREAM EMERGENCY GATE HOIST BEARINGS AND BUSHINGS

Drawn By: C.A.C.
Checked By: L.H.R.
CH RUSSELS, ENGINEER
Approved By: G. PRADOS, CHIEF, DESIGN BRANCH
VINCIENT P.LARLSON, CHIEF, ENG. AND PLAN. DIV.
Date: NOVEMBER 1961
Scale: 1" = 1'-0"
Record Drawing as constructed dated
Drawing Number Q9-31/3.3

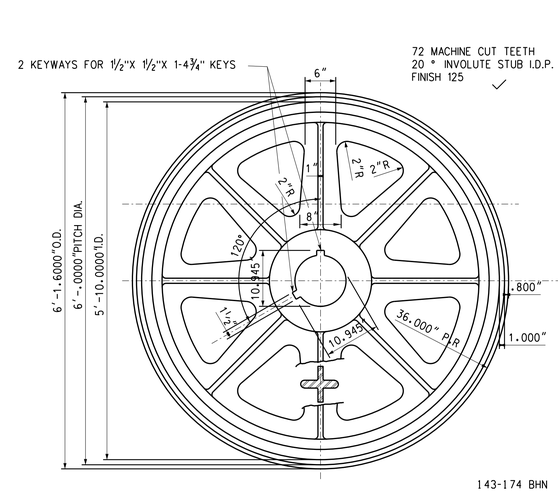

143-174 BHN

INTERMEDIATE GEAR

MARK 31/4-1 CST. ASTM A27-60 GR.65-35
MAKE 2 EST. WT. 4,210 LB. EACH

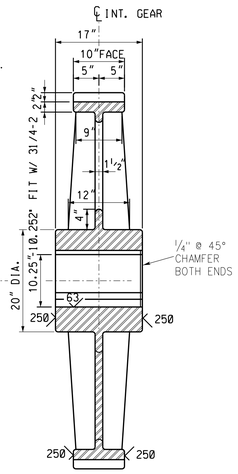

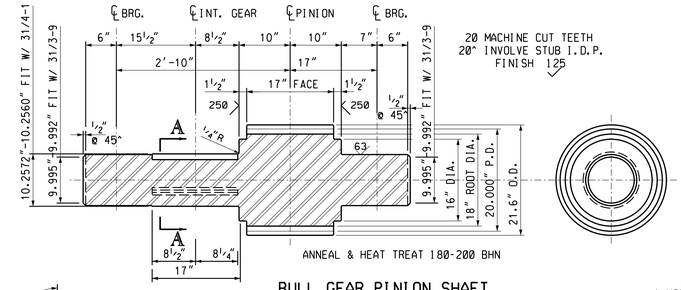

BULL GEAR PINION SHAFT

MARK 31/4-2 FST. ASTM A291-60 CL.4
MAKE 2 EST. WT. 2,675 LB. EACH

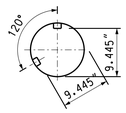

SECTION A-A

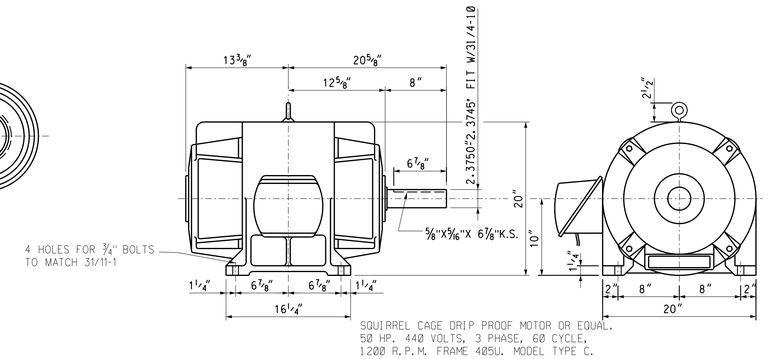

DRIVE MOTOR

MARK 31/4-3 MFGRS. STD.
MAKE 1 AS SHOWN EST. WT. 865 LB. EACH
MAKE 1 OPP. HAND

SCALE : 1"= 1'-0"

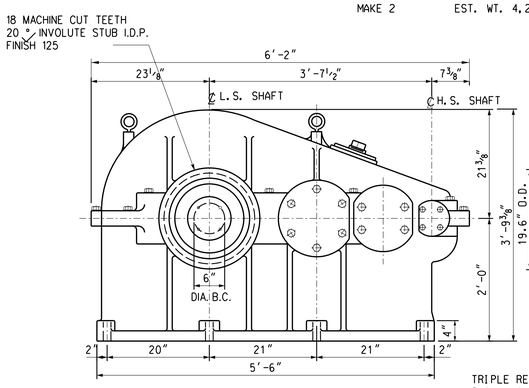

SECONDARY SPEED REDUCER

MARK 31/4-4 MODIFIED MFGRS. STD.
MAKE 1 EST. WT. 9,370 LB. EACH
AS SHOWN
MAKE 1 OPP. HAND

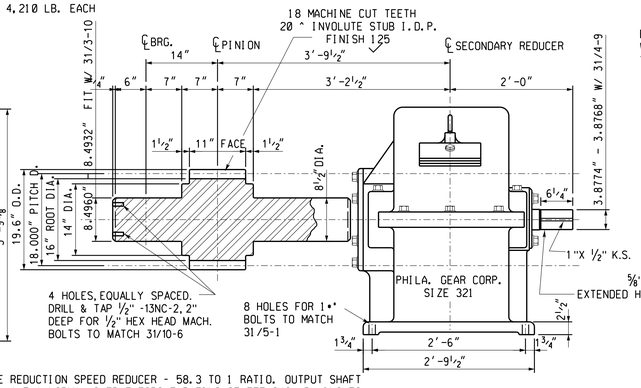

TRIPLE REDUCTION SPEED REDUCER - 58.3 TO 1 RATIO. OUTPUT SHAFT SHALL HAVE A NORMAL OUTPUT TORQUE RATING OF 775,940 LB. INCHES @ 100 % MOTOR RATING. REDUCER SHALL BE MODIFIED TO INCLUDE AN INTEGRALLY FORGED PINION GEAR & SHAFT OF FST.ASTM A237-55,Cl.B

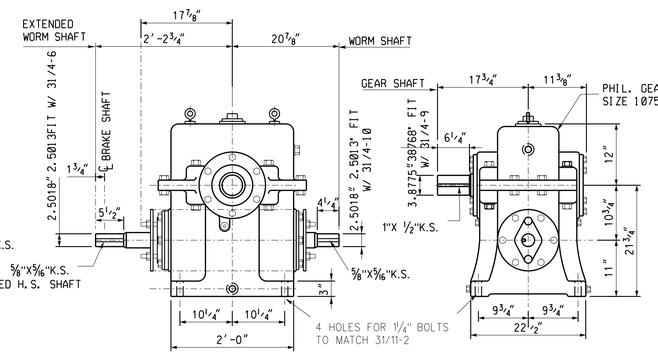

WORM GEAR REDUCER - RATIO 4 6/7 TO 1. OUTPUT SHAFT SHALL HAVE A NORMAL OUTPUT TORQUE RATING OF 13,310 LBS. IN @ 100% MOTOR RATING. REDUCER SHALL BE MODIFIED WITH EXTENDED WORM SHAFT. SEE DWG. NO. 31/1.

PRIMARY SPEED REDUCER

MARK 31/4-5 MODIFIED MFGRS. STD.
MAKE 1 AS SHOWN EST. WT. 1,650 LB. EACH
MAKE 1 OPP. HAND

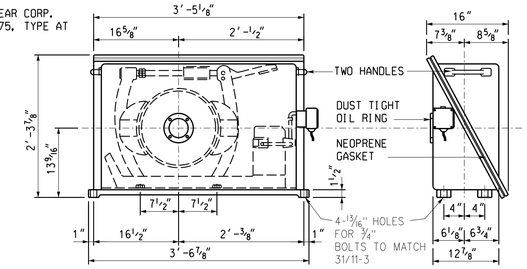

CUTLER-HAMMER STD. BRAKE. AC TORQUE MOTOR OPERATED BRAKE IN WATER TIGHT HOUSING. TYPE "TM-16" 800 LBS. -FT. RATED TORQUE. 1 HR. INTERMITTENT. BRAKE WHEEL TO BE BORED 2.5005" FOR Cl.FNI FIT ON 31/4-5 W/ HAND RELEASE. 2.5007"

BRAKE AND HOUSING

MARK 31/4-6 MFGRS. STD.
MAKE 1 AS SHOWN EST. WT. 700 LB. EACH
MAKE 1 OPP. HAND

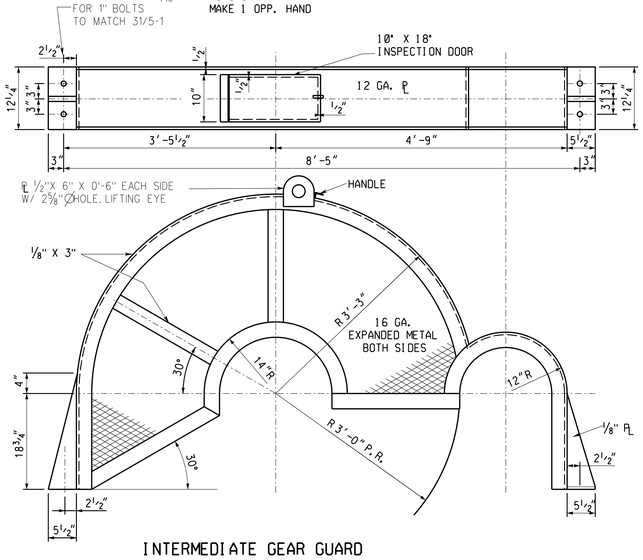

INTERMEDIATE GEAR GUARD

MARK 31/4-7 ST. STEEL ASTM A7-58T
MAKE 2 EST. WT. 166 LB. EACH

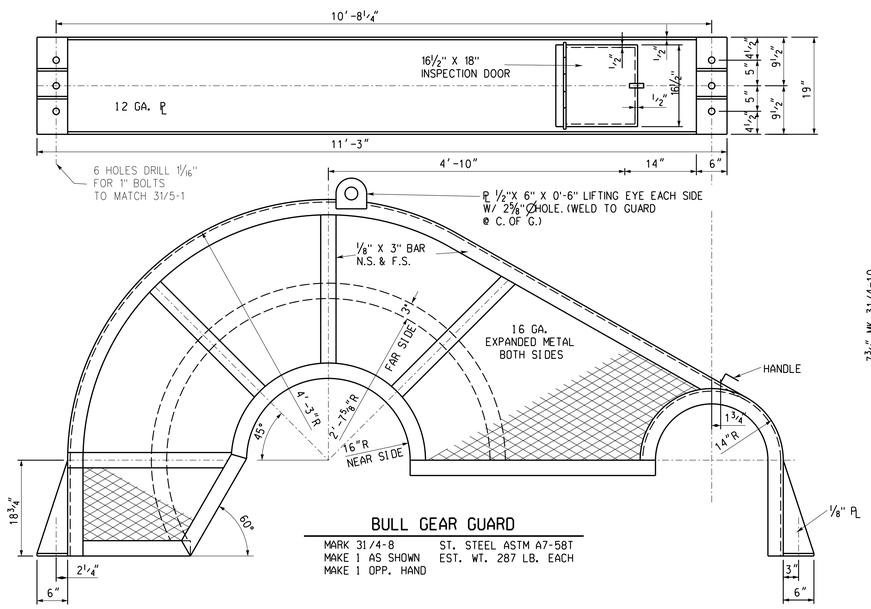

BULL GEAR GUARD

MARK 31/4-8 ST. STEEL ASTM A7-58T
MAKE 1 AS SHOWN EST. WT. 287 LB. EACH
MAKE 1 OPP. HAND

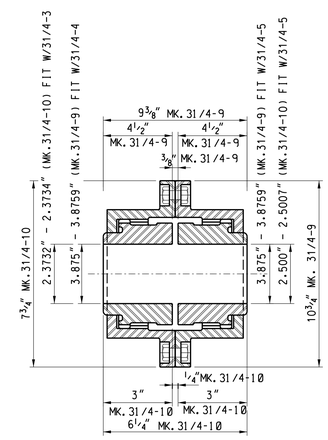

FLEXIBLE COUPLING

MARK 31/4-9 PHIL GEAR CPLG. TYPE 4FF
MAKE 2 EST. WT. 128 LB. EACH
MARK 31/4-10 PHIL GEAR CPLG. TYPE 2-½FF
MAKE 2 EST. WT. 42 LB. EACH

NOT TO SCALE

GENERAL NOTES:
UNLESS OTHERWISE NOTED.
1. FOR EQUIPMENT DATA SEE APPLICABLE PORTIONS OF SPECIFICATIONS.

NOTE "A"
31/4-8 & 11. IN ELEV. RADIAL DIMENSION CHANGED FROM 2'-7" TO 2'-7½"
31/4-9,10 & 11. SCALE CHANGED TO "NOT TO SCALE"

REVISIONS

REV.	DESCRIPTION	DATE	BY	APPROVED
3	REVISED TO SHOW UPDATED AS-CONSTRUCTED STATUS	6-27-86	EH	FLH
2	REVISED AS CONSTRUCTED	8-16-66		PL
1	REVISED TO CONFORM WITH (AMEND. NO. 1) SEE NOTE "A"	2- 8-62	CAC	CHB

US Army Corps of Engineers Nashville District

U.S. ARMY ENGINEER DISTRICT
CORPS OF ENGINEERS
NASHVILLE, TENNESSEE

Drawn By: A.M.S.
Checked By: F.L.H.
CH RUSSELS, ENGINEER
Approved By: G. PRADOS, CHIEF, DESIGN BRANCH
VINCIENT P.LARLSON, CHIEF, ENG. AND PLAN. DIV.

CUMBERLAND RIVER
KENTUCKY AND TENNESSEE
BARKLEY DAM PROJECT
LOCK

UPSTREAM EMERGENCY GATE HOIST GEARS, PINION SHAFTS & & EQUIPMENT DETAILS

Date: NOVEMBER 1961
Scale: 1" = 1'-0"
Record Drawing as constructed dated V.H.V. 2/15/68
Drawing Number **Q9-31/4.3**

Q931C4.DGN

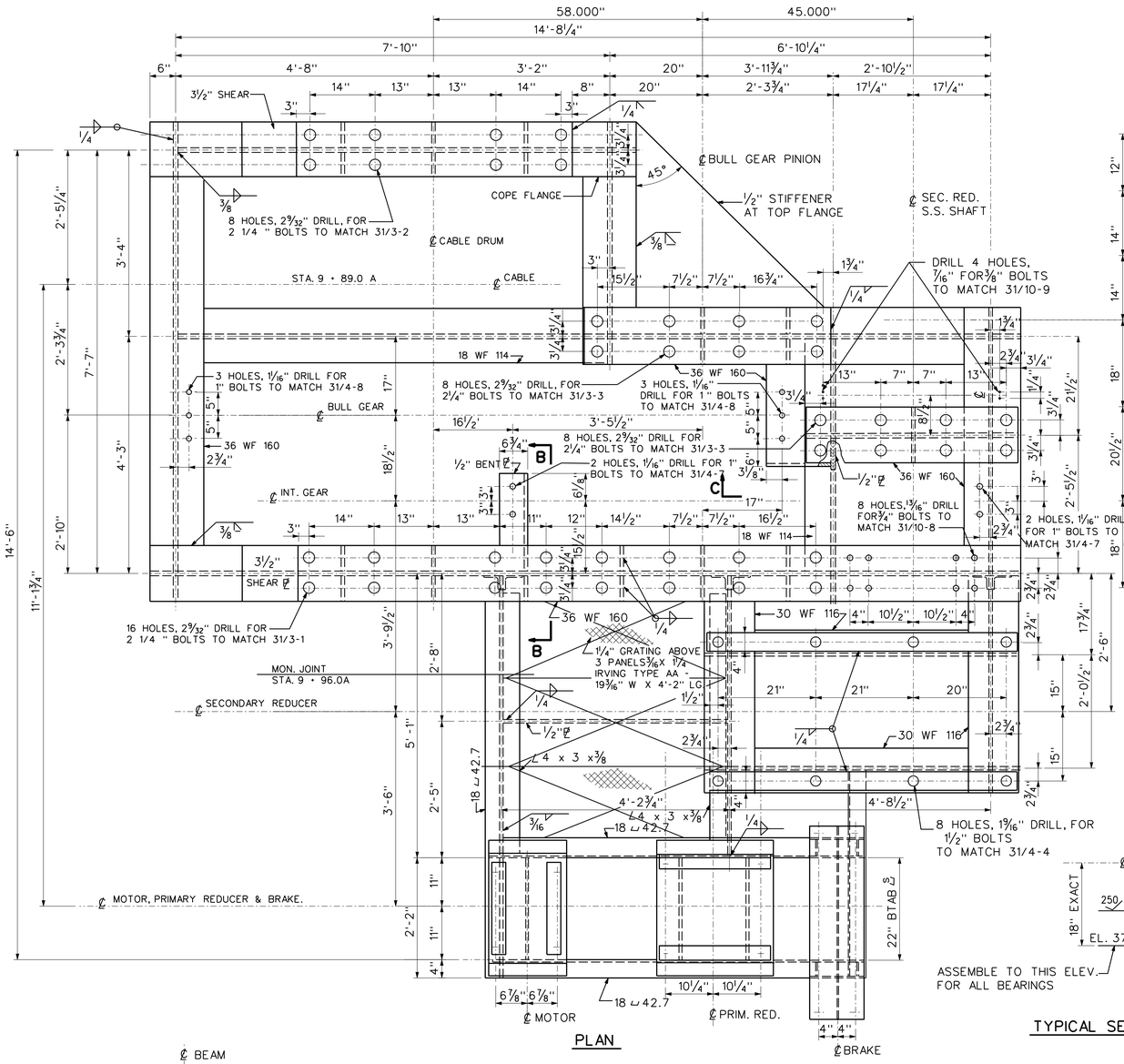

PLAN

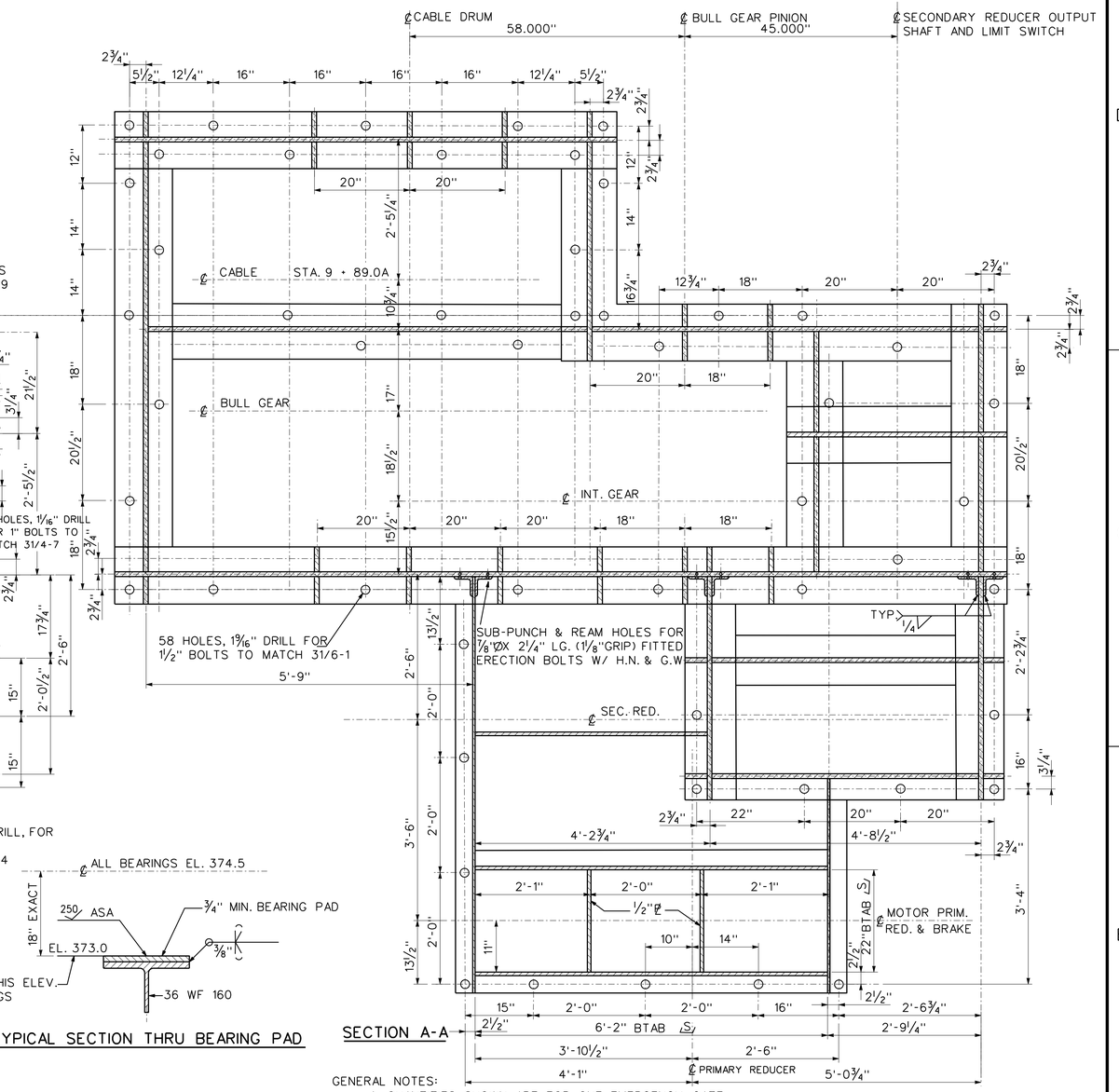

SECTION A-A

TYPICAL SECTION THRU BEARING PAD

GENERAL NOTES:

1. QUANTITIES SHOWN ARE FOR ONE EMERGENCY GATE.
2. JOINTS FOR WHCIH NO WELDING SYMBOLS ARE INDICATED ARE TO BE WELDED AS SHOWN FOR SIMILAR JOINTS.
3. ALL STIFFENER PLATES TO BE ½" STRUCT. STEEL.
4. MACHINED BEARING PADS SHALL BE FULL LENGTH OF RESPECTIVE BEARINGS.

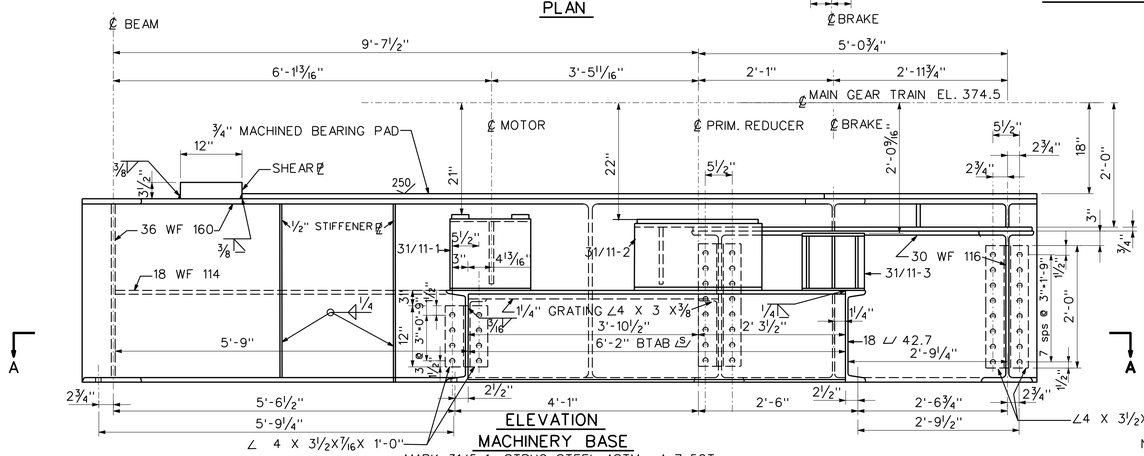

ELEVATION

MACHINERY BASE

MARK 31/5-1 STRUC. STEEL ASTM A-7-52T
MAKE 1 AS SHOWN MAKE 1 OPP. HAND
EST. WT. 13,900 LB. EACH

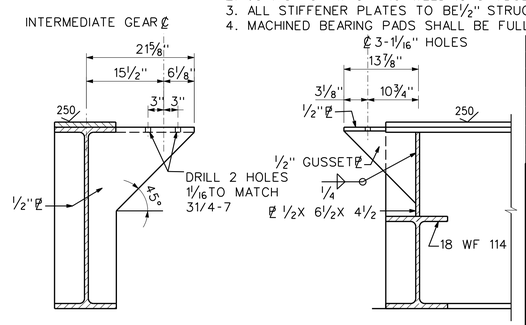

SECTION B-B

SECTION C-C

NOTE "A"

31/5-1 { 1. PLAN VIEW: LOWER LEFT HAND CORNER; 4'-2½" DIM. CHANGED TO 4'-2¾"
2. ELEV.: 2½" DIM. FROM BACK OF 18⊔ 42.7 BELOW BRAKE SUPPORT CHANGED TO 1¼"

REVISIONS				
REV.	DESCRIPTION	DATE	BY	APPROVED
3	FIELD VERIFIED - NO CHANGES	6-27-86	EH	FLH
2	REVISED AS CONSTRUCTED	8-16-66		CHB
1	REVISED TO CONFORM WITH (AMEND. NO. 1) SEE NOTE "A"	2- 8-62	CAC	CHKD

12" 6" 0 1'

US Army Corps of Engineers Nashville District

U.S. ARMY ENGINEER DISTRICT
CORPS OF ENGINEERS
NASHVILLE, TENNESSEE

Drawn By: C.A.C.
Checked By: L.H.R.
CH RUSSELS
ENGINEER

CUMBERLAND RIVER
KENTUCKY AND TENNESSEE
BARKLEY DAM PROJECT
LOCK

UPSTREAM EMERGENCY GATE HOIST MACHINERY BASE

Approved By: G. PRADOS
CHIEF, DESIGN BRANCH
VINCIENT P. LARLSON
CHIEF, ENG. AND PLAN. DIV.

Date: NOVEMBER 1961
Scale: 1" = 1'-0"
Record Drawing as constructed dated

Drawing Number Q9-31/5.3

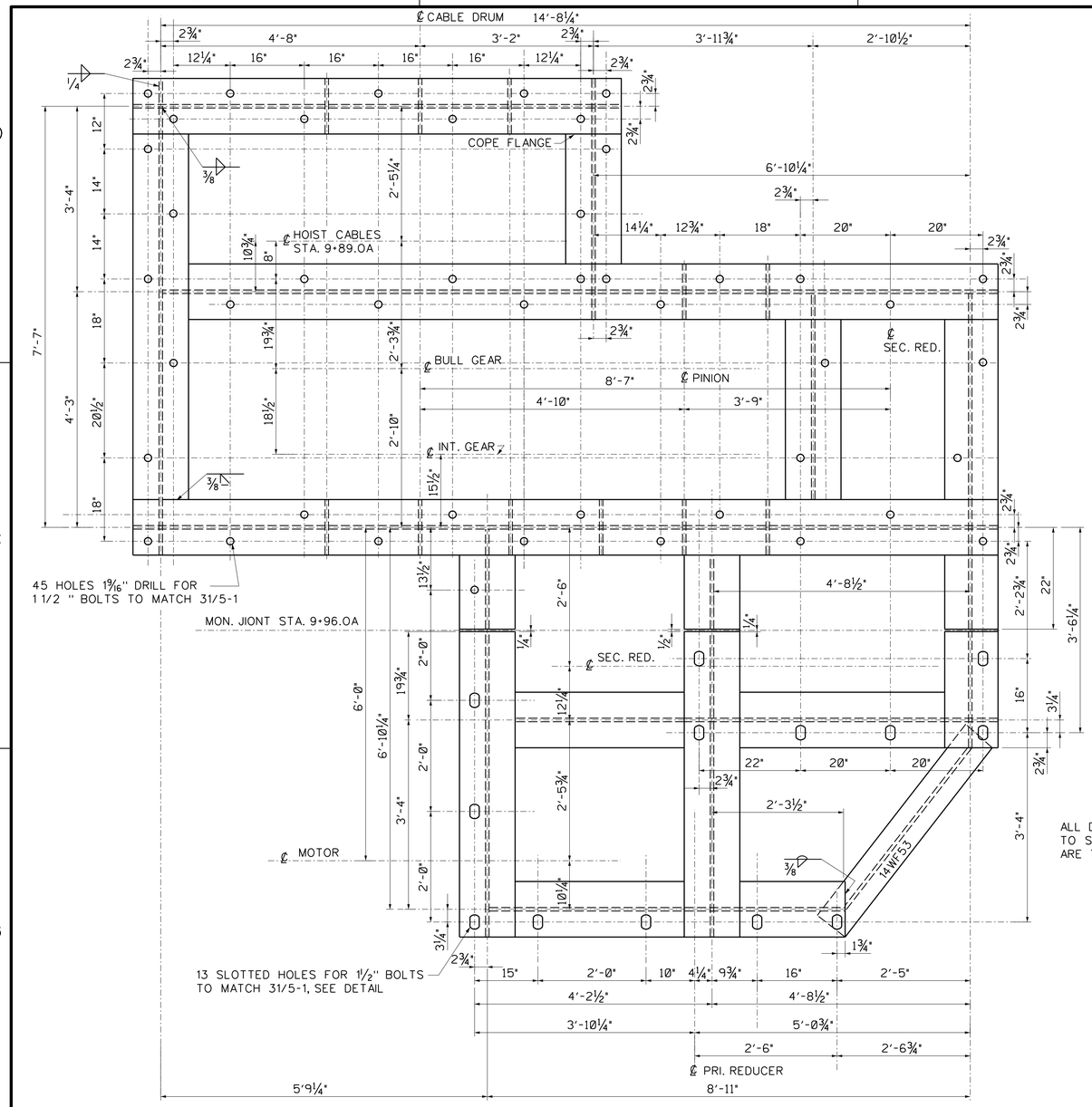

PLAN

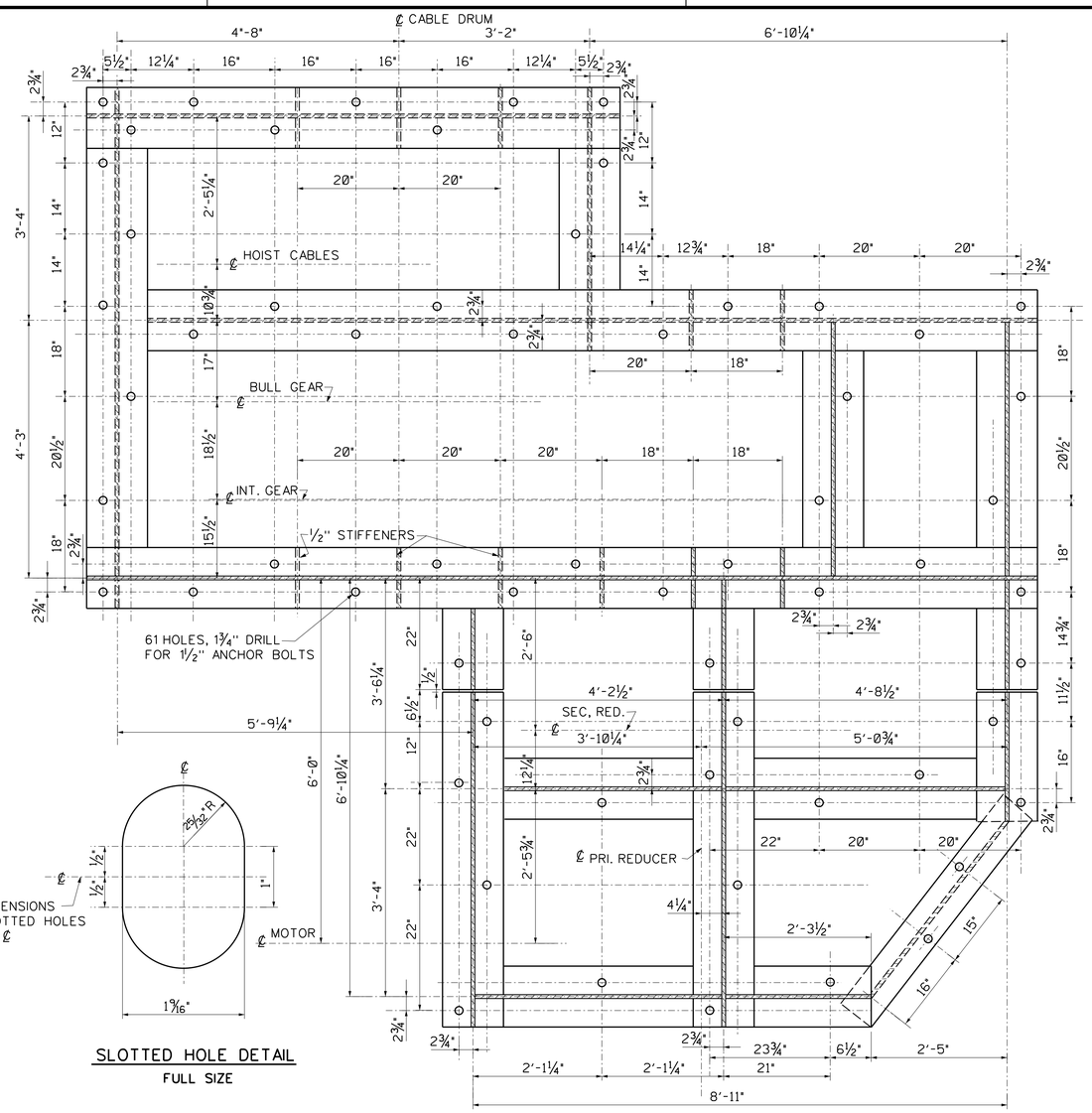

SECTION A-A (BOTTOM DRILLING)

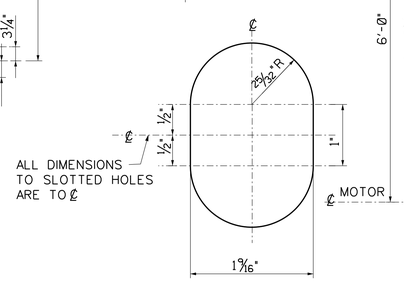

SLOTTED HOLE DETAIL

FULL SIZE

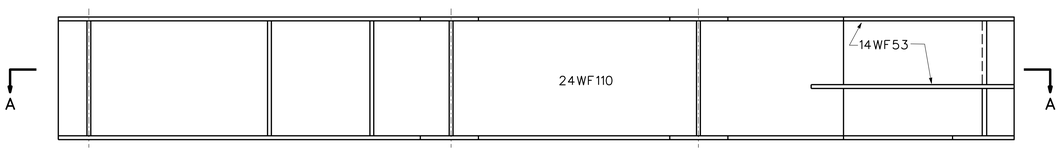

ELEVATION

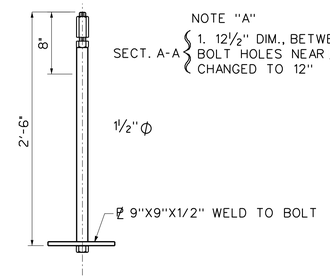

NOTE "A"
SECT. A-A { 1. 12½" DIM., BETWEEN ℄ ANCHOR BOLT HOLES NEAR ℄ SEC. REDUCER, CHANGED TO 12"

ANCHOR BOLT

MARK 31/6-2 BOLT STEEL
MAKE 138 EST. WT. 30 LB. EACH
SCALE: 1½"=1'-0"

MACHINERY BASE SUPPORT (TOP DRILLING)

MARK 31/6-1 STRUCT. STEEL ASTM A-7-52T
MAKE 1 AS SHOWN MAKE 1 OPP. HAND
EST. WT. 10,200 LB. EACH

GENERAL NOTES:
1. QUANTITIES SHOWN ARE FOR ONE EMERGENCY GATE.
2. JOINTS FOR WHICH NO WELDING SYMBOLS ARE INDICATED ARE TO BE WELDED AS SHOWN FOR SIMILAR JOINTS.
3. ALL STIFFENER PLATES TO BE ½" STRUCT. STEEL.
4. ALL MEMBERS ARE 24WF110 EXCEPT AS NOTED.

REVISIONS

REV.	DESCRIPTION	DATE	BY	APPROVED
3	FIELD VERIFIED - NO CHANGES	6-27-86	EH	FLH
2	REVISED AS CONSTRUCTED	8-16-66		CHB
1	REVISED TO CONFORM WITH (AMEND. NO. 1) SEE NOTE "A"	2-8-62	CAC	CHB

US Army Corps of Engineers Nashville District
U.S. ARMY ENGINEER DISTRICT
CORPS OF ENGINEERS
NASHVILLE, TENNESSEE

Drawn By: D.R.R.
Checked By: C.H.R.
CH RUSSELS
ENGINEER

CUMBERLAND RIVER
KENTUCKY AND TENNESSEE
BARKLEY DAM PROJECT
LOCK

UPSTREAM EMERGENCY GATE HOIST
MACHINERY BASE SUPPORT

Approved By: G. PRADOS
CHIEF, DESIGN BRANCH
VINCIENT P.LARLSON
CHIEF, ENG. AND PLAN. DIV.

Date: NOVEMBER 1961
Scale: 1" = 1'-0"
Record Drawing as constructed dated
Drawing Number Q9-31/6.3

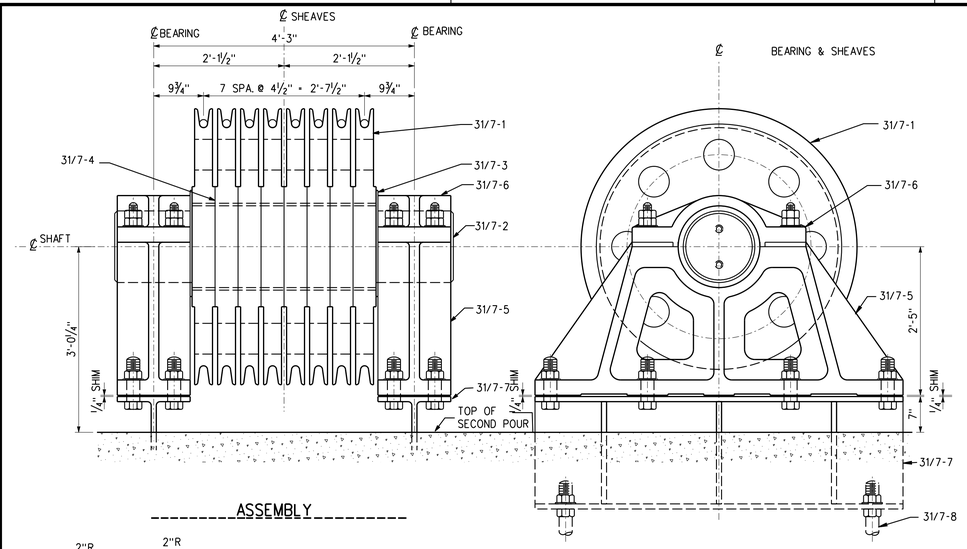

ASSEMBLY

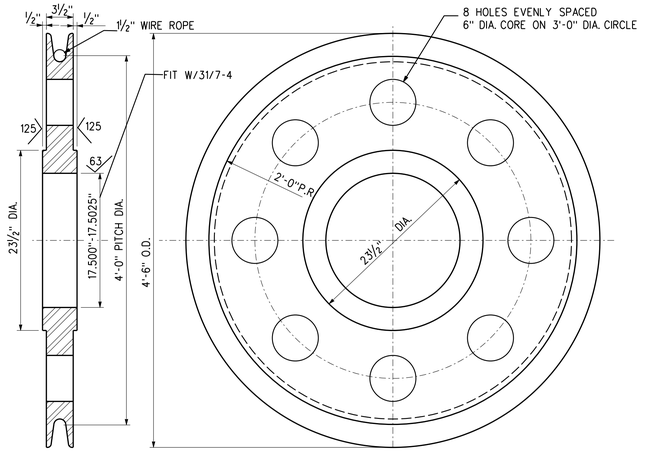

SHEAVE

MARK 31/7-1 CST ASTM A148-58 GR. 80-40
MAKE 16 EST. WT. 1620 LB. EACH

SCALE: 1½" = 1'-0"

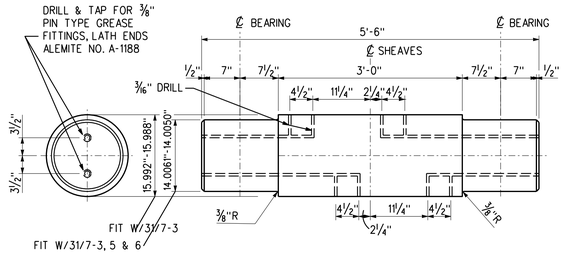

SHEAVE SHAFT FINISH ALL OVER 63

MARK 31/7-2 F.S. ASTM A237-55 CL. C
MAKE 2 EST. WT. 3360 LB. EACH

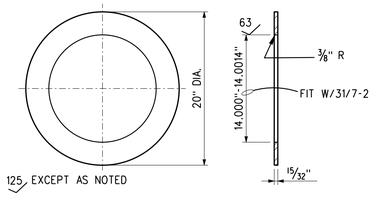

FINISH 125 EXCEPT AS NOTED

FILLER

MARK 31/7-3 CBRZ ASTM B143-52 ALLOY 2B
MAKE 4 EST. WT. 22 LB. EACH

SCALE: ½" = 1'-0"

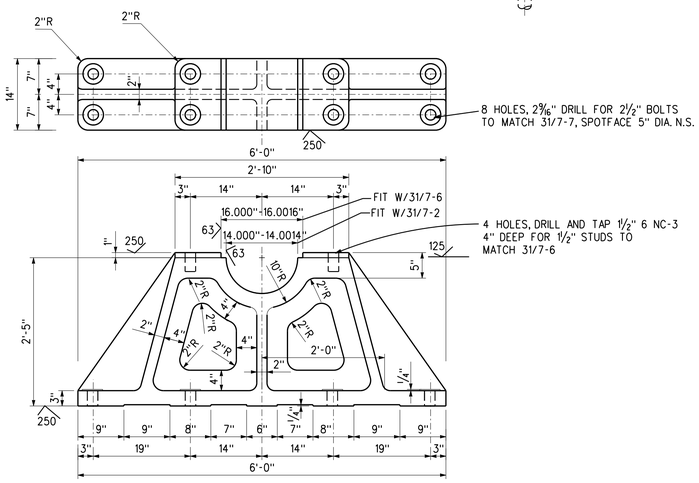

BEARING PEDESTAL

MARK 31/7-3 CST ASTM A148-58 GR. 80-40
MAKE 4 EST. WT. 2380 LB. EACH

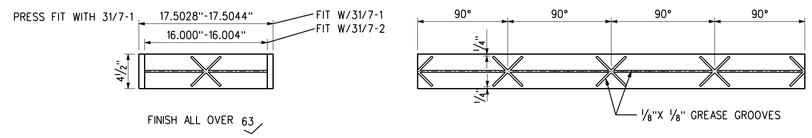

BUSHING

MARK 31/7-4 CBRZ ASTM B143-52 ALLOY 2B
MAKE 16 EST. WT. 55 LB. EACH

SCALE: 1½" = 1'-0"

DEVELOPMENT

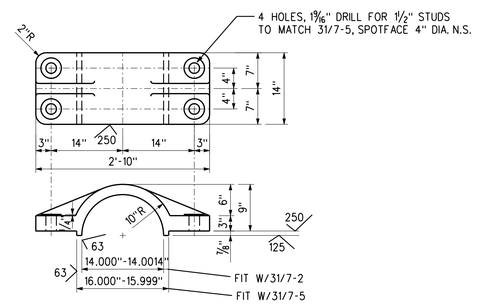

BEARING CAP

MARK 31/7-6 CST ASTM A148-58 GR. 80-40
MAKE 4 EST. WT. 565 LB. EACH

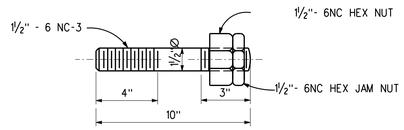

STUD

MARK 31/7-9 BOLT STL. ASTM A307-58 GR. A
MAKE 16 EST. WT. 7 LB. EACH

SCALE: 3" = 1'-0"

GENERAL NOTES:

1. QUANTITIES SHOWN ARE FOR ONE EMERGENCY GATE.
2. MACHINE FINISH SYMBOLS & TOLERANCES ARE ASA STANDARDS.

31/7-2 — 1. MATCH MARKS FOR DIM. 16.000" CHANGED FROM 31/7-3 & 4 TO 31/7-4
31/7-4 — 2. MATCH MARKS FOR DIM. 14.000" CHANGED FROM 31/7-5 & 6 TO 31/7-3,5 & 6
31/7-4 — 1. DIMENSION 17.503" CHANGED TO 17.5000"
31/7-5 — 1. MATCH MARKS FOR DIM. 16.000" CHANGED FROM 31/7-5 TO 31/7-6
31/7-6 — 2. CLASS FIT FOR DIM. 14.000" CHANGED FROM CL. LC-2 TO CL. FN-1
31/7-6 — 1. CLASS FIT FOR DIM. 14.000" CHANGED FROM CL. LC-2 TO CL. FN-1
31/7-8 — 1. ANCHOR ℄ DIM. CHANGED FROM 10" X 10" X 1/2" TO 10" X 14" X 1/2"

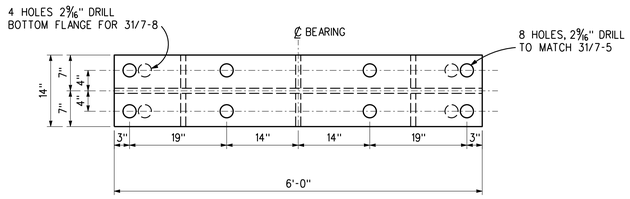

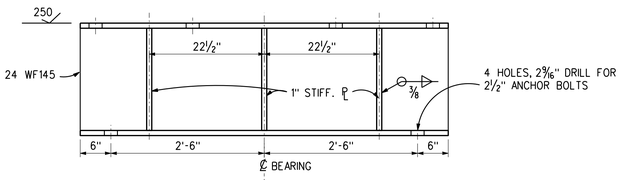

BEARING BASE

MARK 31/7-7 STRUCT. ST. ASTM A7-58T
MAKE 4 EST. WT. 1110 LB. EACH

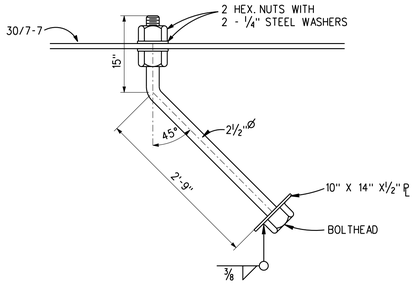

ANCHOR BOLT

MARK 31/7-8 BOLT STEEL
MAKE 16 EST. WT. 98 LB. EACH

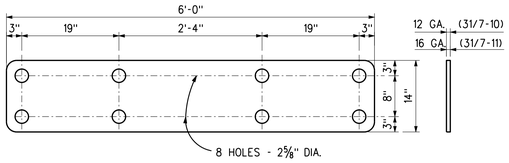

SHIM

MARK 31/7-10 STEEL
MAKE 4 EST. WT. 42 LB. EACH
MARK 31/7-11 STEEL
MAKE 8 EST. WT. 25 LB. EACH

REVISIONS

REV.	DESCRIPTION	DATE	BY	APPROVED
3	FIELD VERIFIED - NO CHANGES	6-27-86	RJ	FLH
2	REVISED AS CONSTRUCTED	8-16-66		CHB
1	REVISED TO CONFORM WITH (AMEND. NO. 1) SEE NOTE "A"	2-8-62	CAC	CHB

US Army Corps of Engineers Nashville District

U.S. ARMY ENGINEER DISTRICT
CORPS OF ENGINEERS
NASHVILLE, TENNESSEE

Drawn By: C.A.C.
Checked By: L.H.R.
CH RUSSELS, ENGINEER

CUMBERLAND RIVER
KENTUCKY AND TENNESSEE
BARKLEY DAM PROJECT
LOCK

UPSTREAM EMERGENCY GATE HOIST IDLER SHEAVE AND DETAILS

Approved By: G. PRADOS, CHIEF, DESIGN BRANCH
VINCIENT P. LARLSON, CHIEF, ENG. AND PLAN. DIV.

Date: DEC. 1960
Scale: 1" = 1'-0"
Record Drawing as constructed dated

Drawing Number **Q9-31/7.3**

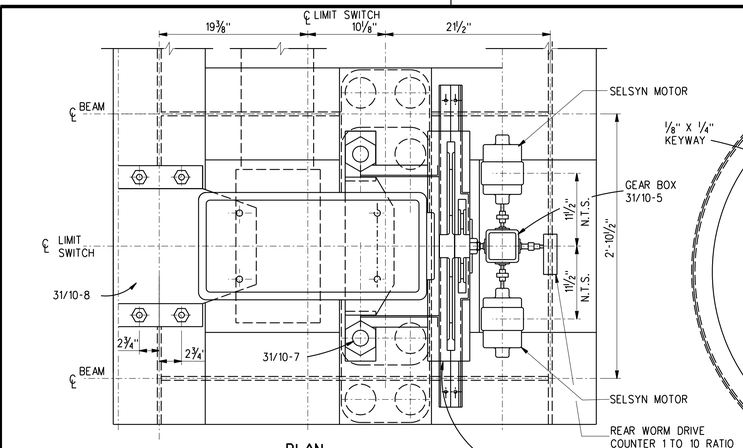

PLAN

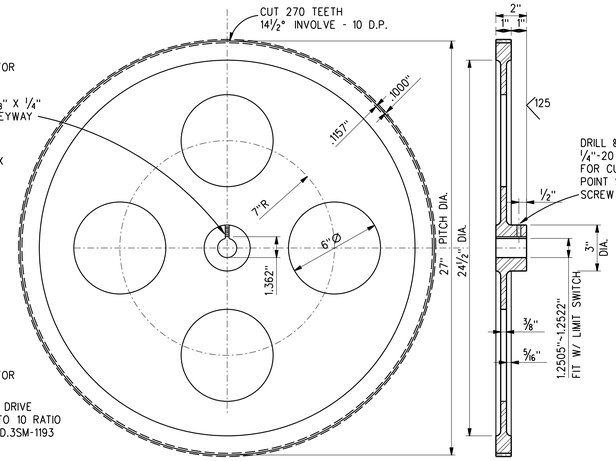

DRIVEN GEAR (LIMIT SWITCH)

MARK 31/10-1 CST. ASTM A27-58 GR.60-30
MAKE 2 EST. WT. 72 LB. EACH
SCALE: 3"=1'-0"

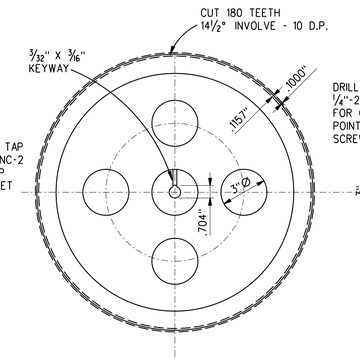

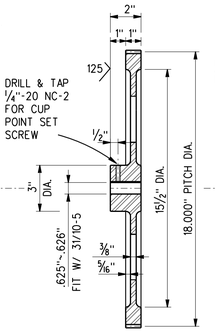

DRIVEN GEAR (GEAR BOX)

MARK 31/10-2 CST. ASTM A27-58 GR.60-30
MAKE 2 EST. WT. 37 LB. EACH
SCALE: 3"=1'-0"

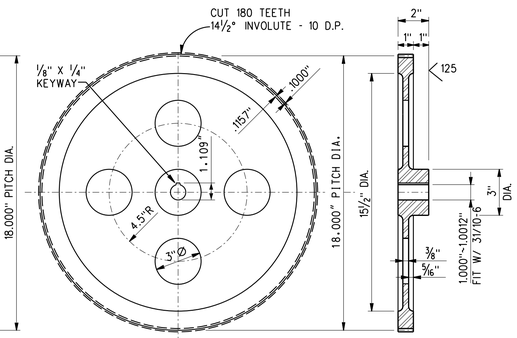

DRIVEN GEAR (LIMIT SWITCH)

MARK 31/10-3 CST. ASTM A27-58 GR.60-30
MAKE 2 EST. WT. 39 LB. EACH
SCALE: 3"=1'-0"

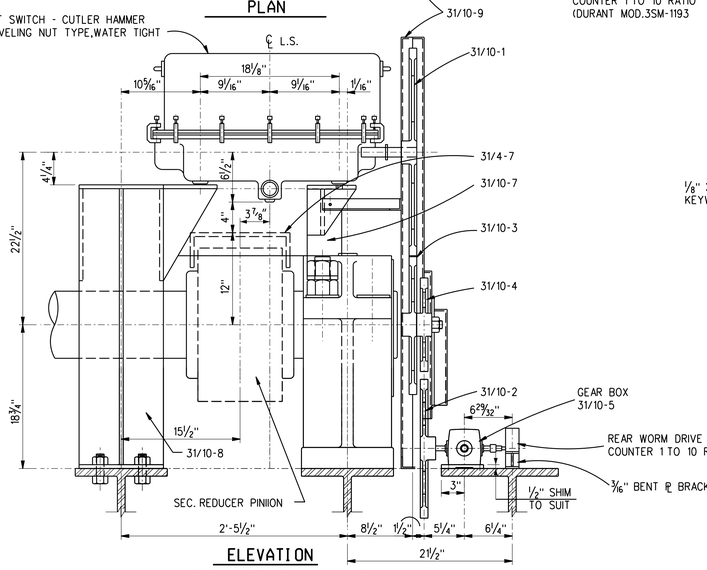

ELEVATION
ASSEMBLY CONTROL DRIVES

SCALE: 1½"=1'-0"

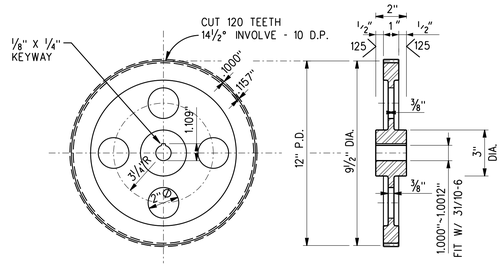

DRIVING GEAR (GEAR BOX)

MARK 31/10-4 CST. ASTM A27-58 GR.60-30
MAKE 2 EST. WT. 21 LB. EACH
SCALE: 3"=1'-0"

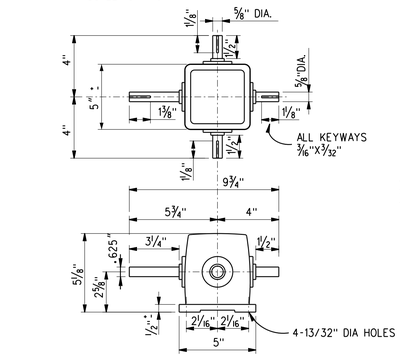

GEAR BOX (1 TO 1 RATIO)

MARK 31/10-5 MODIFIED OHIO GEAR, RAO
MAKE 2 EST. WT. 15 LB. EACH
SCALE: 3"=1'-0"

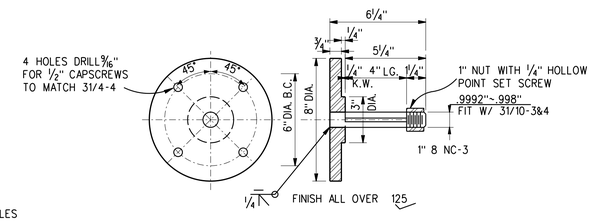

SHAFT FLANGE & STEM

MARK 31/10-6 ST. STEEL ASTM A7-58T
MAKE 2 EST. WT. 13 LB. EACH
SCALE: 3"=1'-0"

NOTE "A"

ASSY. EL.
1. 3⅞" DIM. ADDED BETWEEN ℄ PINION & ℄ LIMIT SWITCH
2. INT. PINION SHAFT CHANGED TO READ SEC. REDUCER PINION

31/10-6
1. FINISH 250 CHANGED TO 125

31/10-7
1. IN ELEV.-DIM. 12" CHANGED TO 12 5/16" IN OVER-ALL HEIGHT.
2. END VIEW -¾" DIM. FROM ℄ SUPPORT TO BOLT HOLE CHANGED TO 1".

31/10-9
1. SIDE ELEV.-DIM. 9½" CHANGED TO 10¼" DIM. 8½" CHANGED TO 9¼"

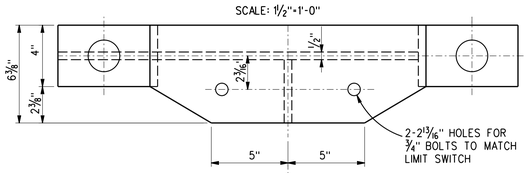

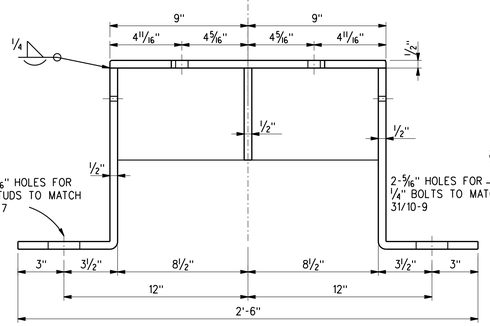

LIMIT SWITCH FRONT SUPPORT

MARK 31/10-7 ST. STEEL ASTM A7-58T
MAKE 2 EST. WT. 52 LB. EACH
SCALE: 3"=1'-0"

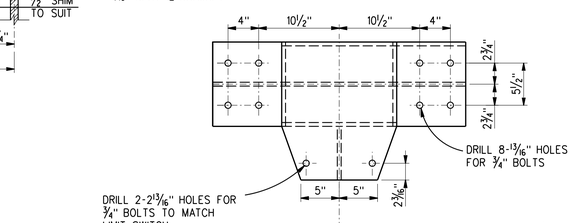

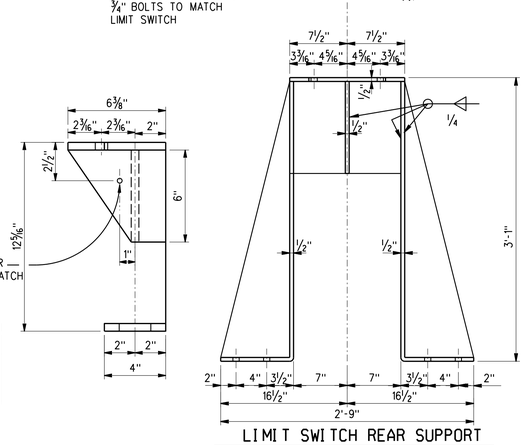

LIMIT SWITCH REAR SUPPORT

MARK 31/10-8 ST. STEEL ASTM A7-58T
MAKE 2 EST. WT. 260 LB. EACH
SCALE: 1½"=1'-0"

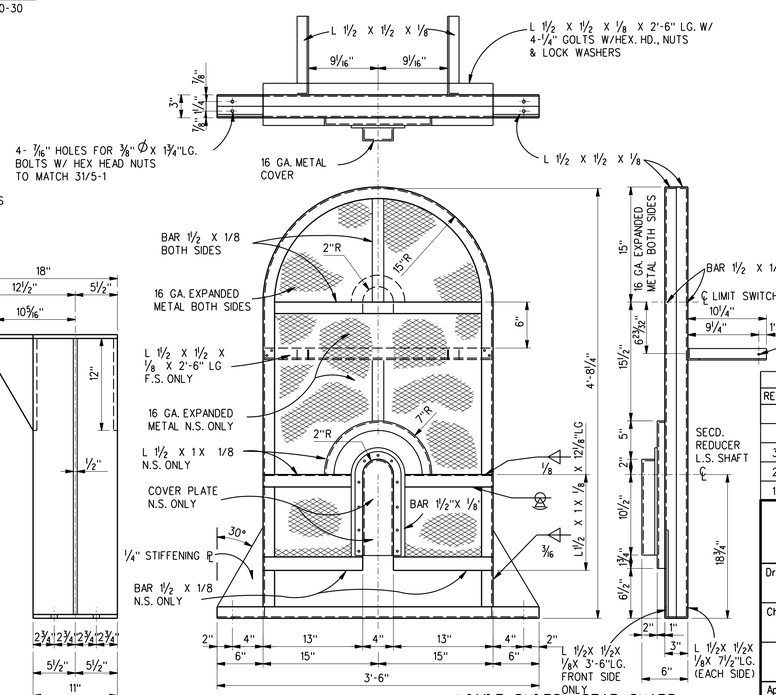

LIMIT SWITCH GEAR GUARD

MARK 31/10-9 ST. STEEL ASTM A7-58T
MAKE 2 EST. WT. 61 LB. EACH
SCALE: 1½"=1'-0"

GENERAL NOTES:
UNLESS OTHERWISE NOTED
1. QUANTITIES SHOWN ARE FOR ONE EMERGENCY GATE.
2. JOINTS FOR WHICH NO WELDING SYMBOLS ARE INDICATED ARE TO BE WELDED AS SHOWN FOR SIMILAR JOINTS
3. MACHINE SYMBOLS ARE A.S.A. SURFACE FINISH STANDARDS.

REVISIONS

REV.	DESCRIPTION	DATE	BY	APPROVED
3	FIELD VERIFIED - NO CHANGES	6-27-86	RJ	FLH
2	REVISED AS CONSTRUCTED	8-16-66		CHB
1	REVISED TO CONFORM WITH (AMEND. NO. 1) SEE NOTE "A"	2- 8-62	CAC	CHB

US Army Corps of Engineers Nashville District
U.S. ARMY ENGINEER DISTRICT
CORPS OF ENGINEERS
NASHVILLE, TENNESSEE

Drawn By: A.M.S.
Checked By: F.L.H.
CH. RUSSELS
ENGINEER
Approved By: G. PRADOS
CHIEF, DESIGN BRANCH
VINCIENT P.LARLSON
CHIEF, ENG. AND PLAN. DIV.

CUMBERLAND RIVER
KENTUCKY AND TENNESSEE
BARKLEY DAM PROJECT
LOCK

UPSTREAM EMERGENCY GATE HOIST MISC. CONTROL EQUIPMENT & DETAILS

Date: NOVEMBER 1961
Scale: 3"=1'-0"
Record Drawing as constructed dated
Drawing Number Q9-31/10.3

REVISIONS				
REV.	DESCRIPTION	DATE	BY	APPROVED
1	REVISED AS CONSTRUCTED	8-16-66		CHR
2	REVISED TO SHOW UPDATED AS CONSTRUCT. STATUS	6-27-86	RJ	FLH
		- -		
		- -		

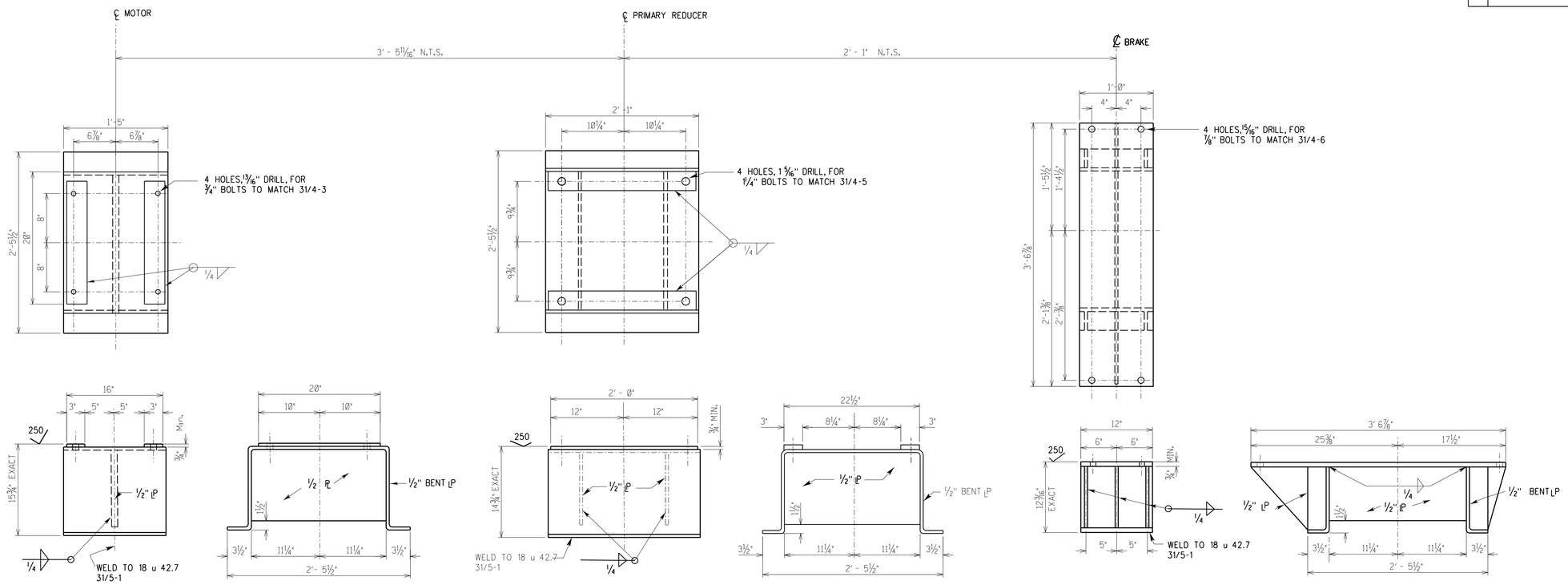

MOTOR SUPPORT

MARK 31/11-1 STRUCT. ST. ASTM A373-58T
MAKE 2 EST. WT. 210 LB. EACH

PRIMARY REDUCER SUPPORT

MARK 31/11-2 STRUCT. ST. ASTM A373-58T
MAKE 2 EST. WT. 280 LB. EACH

BRAKE SUPPORT

MARK 31/11-3 STRUCT. ST. ASTM A373-58T
MAKE 2 EST. WT. 238 LB. EACH

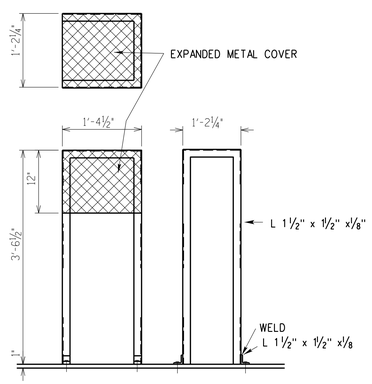

REDUCER COUPLING GUARD

MARK 31/11-4 STRUCT. ST.
MAKE 2

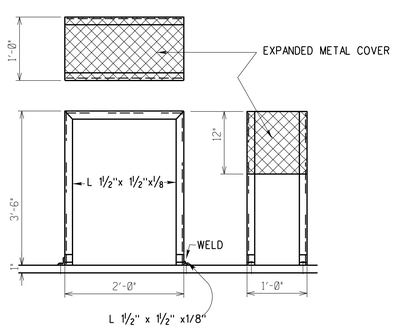

MOTOR COUPLING GUARD

MARK 31/11-5 STRUCT. ST.
MAKE 2

GENERAL NOTES
1. QUANTITIES SHOWN ARE FOR ONE EMERGENCY GATE.
2. MACHINE SYMBOLS ARE ASA SURFACE FINISH STANDARDS.

U.S. ARMY ENGINEER DISTRICT
CORPS OF ENGINEERS
NASHVILLE, TENNESSEE

Drawn By: C.A.C.
Checked By: F.L.H.
C. H. RUSSELS, ENGINEER
Approved By: G. PRADOS, CHIEF, DESIGN BRANCH
VINCENT P. CARLSON, CHIEF, ENG. AND PLAN. DIV.

CUMBERLAND RIVER
KENTUCKY AND TENNESSEE
BARKLEY DAM PROJECT
LOCK
UPSTREAM EMERGENCY GATE HOIST MACHINERY SUPPORTS

Date: NOVEMBER 1961
Scale: 1 1/2" = 1'-0"
Record Drawing as constructed dated
Drawing Number **Q9-31/11.2**

Q931B11.DGN

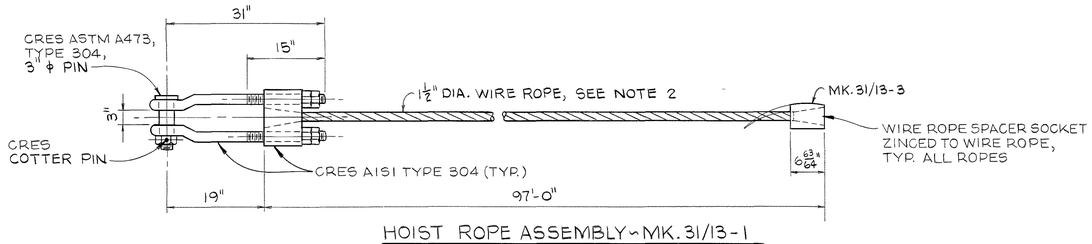

HOIST ROPE ASSEMBLY ~ MK. 31/13-1

MAKE: 8
SCALE: 1" = 1'-0"

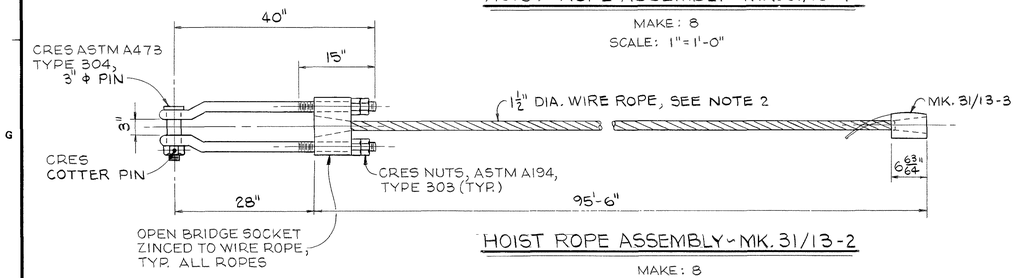

HOIST ROPE ASSEMBLY ~ MK. 31/13-2

MAKE: 8
SCALE: 1" = 1'-0"

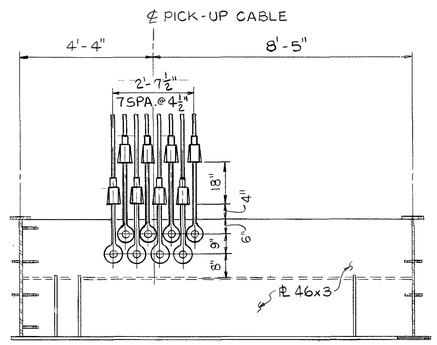

CABLE ATTACHMENT SPACING AT GATE

SCALE: 1½" = 1'-0"

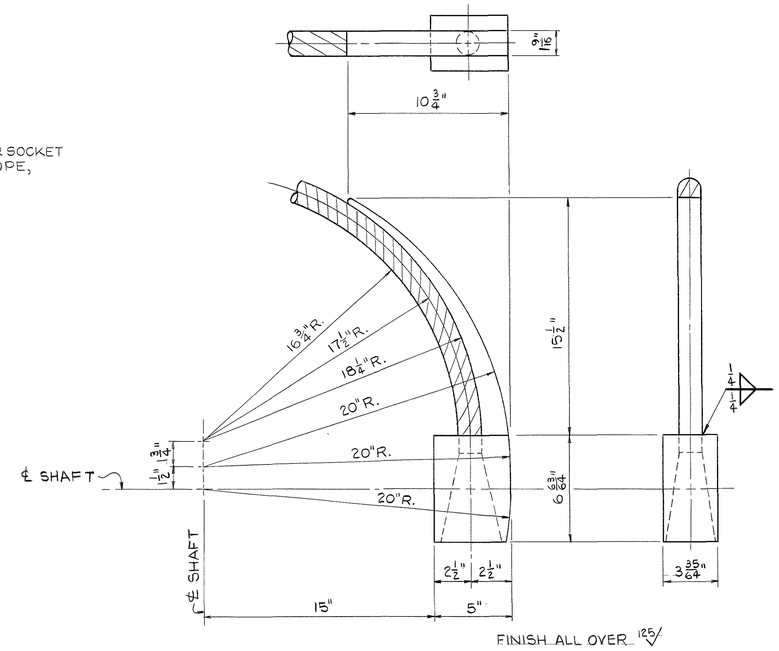

WIRE ROPE SPACER ~ MK. 31/13-3

MATERIAL: DROPPED FORGED, CRES, ASTM A473, TYPE 410
MAKE: 16 EST. WEIGHT: 32 LBS. EACH
SCALE: 3" = 1'-0"

NOTES:

1. CRES STANDS FOR CORROSION RESISTING STEEL.
2. 1½" ϕ WIRE ROPE, STAINLESS STEEL TYPE 304, MIN. B.S. 177,000# AND SHALL CONFORM TO APPLICABLE REQUIREMENTS OF FED. SPEC. RR-W-410 d, AND SHALL BE TYPE IV, CLASS 3, FLATTENED STRAND, CONSTRUCTION 2, 6x30 STYLE "G" REGULAR LAY, IWRC.
3. THE ROPE MANUFACTURER SHALL PRESTRESS THE ROPES TO 35,000 LBS, MARK THE CENTERLINE ON THE FULL LENGTH OF EACH ROPE, AND SHALL MARK THE CORRECT CUTTING LENGTH OF EACH ROPE WHILE UNDER TENSION. ROPE SOCKETS SHALL BE ATTACHED IN PROPER ALIGNMENT ALONG THE CENTERLINE OF ROPE AND KINKING OF ROPE WILL BE CAUSE FOR REJECTION.
4. SHOP DRAWINGS SHALL BE SUBMITTED FOR APPROVAL ON HOIST ROPE ASSEMBLY WITH DETAILS OF OPEN BRIDGE SOCKET PRIOR TO FABRICATION.
5. CABLE ASSEMBLY END SOCKETS SHALL BE ZINCED TO WIRE ROPE BY WIRE ROPE SUPPLIER. THE ZINCED SOCKET CONNECTION SHALL BE CAPABLE OF WITHSTANDING THE TOTAL BREAKING STRENGTH OF THE WIRE ROPE.
6. CABLE SOCKETS SHALL BE 100% RADIOGRAPHIC INSPECTED FOR DEFECTS AND ANY DEFECTS FOUND THAT LESSEN STRENGTH OR SOUNDNESS REPAIRED. FABRICATED SOCKETS SHALL BE CAPABLE OF WITHSTANDING THE TOTAL BREAKING STRENGTH OF THE WIRE ROPE.

REVISION	DATE	DESCRIPTION	BY	CHKD

12" 6" 0 1' 2'
GRAPHIC SCALE

DEPARTMENT OF THE ARMY
NASHVILLE DISTRICT, CORPS OF ENGINEERS
NASHVILLE, TENNESSEE

DRAWN: RMC
CHECKED: WDVD
TRACED:
COMPARED:
Ronald Carter
ENGINEER

CUMBERLAND RIVER
KENTUCKY AND TENNESSEE
BARKLEY DAM PROJECT
LOCK
UPSTREAM EMERGENCY GATE HOIST
WIRE ROPE ASSEMBLY REPLACEMENT

SUBMITTED: Howard Sayre
CHIEF, DESIGN BRANCH
APPROVAL RECOMMENDED: A. Lemmon
for CHIEF, ENGINEERING DIVISION
APPROVED: William L. Wade
COLONEL, C. E. DISTRICT ENGINEER
DATE: JULY 1987
SCALE AS SHOWN SPEC NO
DRAWING NUMBER
SHEET OF Q9-31/13
RECORD DRAWING AS CONSTRUCTED DATED