BUILDING SP-312
REPLACE CHILLER

NAVAL STATION • NORFOLK, VIRGINIA

NAVAL FACILITIES ENGINEERING COMMAND ~ MID-ATLANTIC

PUBLIC WORKS DEPARTMENT NORFOLK
FACILITIES ENGINEERING AND ACQUISITION DIVISION

VICINITY MAP

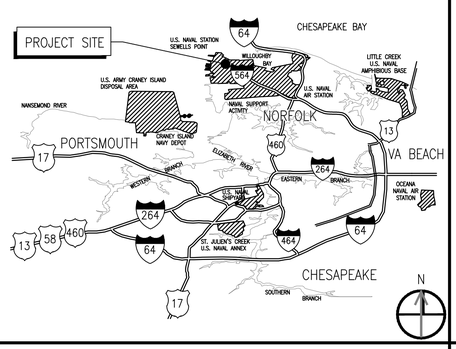

LOCATION MAP

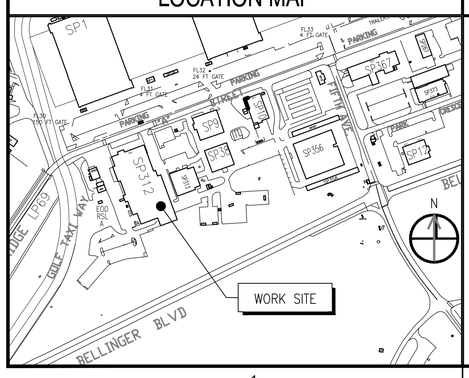

SYMBOLS LEGEND

CARET SYMBOLIZES A PHOTOGRAPH OR INTERIOR ELEVATION.

SHADED ARROW SIGNIFIES A SECTION CUT OR EXTERIOR ELEVATION.

B2 / G-001 — DETAIL, SECTION, OR ELEVATION NUMBER. NUMBER REFERENCES GRID PLACEMENT ON SHEET WHICH DETAIL IS DRAWN.

SHEET ON WHICH DETAIL, SECTION, OR ELEVATION IS DRAWN

DETAIL OR SECTION TITLE — B2'

SCALE: X/X" = 1'-0" — G-001, A-00#

SHEET(S) ON WHICH DETAIL, SECTION, ELEVATION, OR PHOTOGRAPH IS CALLED OUT [INCLUDE FIRST & ATYPICAL LOCATIONS]

ABBREVIATIONS

ALUM	ALUMINUM	MFR	MANUFACTURER
B/W	BETWEEN	MPH	MILES PER HOUR
CL	CENTERLINE	OC	ON CENTER
CMU	CONC MASONRY UNIT	PSF	POUNDS PER SQ FT
CONC	CONCRETE	PSI	POUNDS PER SQ IN
DEPT	DEPARTMENT	REINF	REINFORCING,-MENT
ø or DIA	DIAMETER	REQ'D	REQUIRED
DIM	DIMENSION	SCHED	SCHEDULE
DWGS	DRAWINGS	SHT	SHEET
ELEV	ELEVATION	SPEC	SPECIFICATION
EXIST	EXISTING	SQ	SQUARE
FED	FEDERAL	T&B	TOP & BOTTOM
GALV	GALVANIZED	TYP	TYPICAL
KIP	1000 POUNDS	VERT	VERTICAL
KSI	KIPS PER SQ INCH	UON	UNLESS OTHERWISE NOTED
KTR	CONTRACTOR		
LB	POUNDS	VDOT	VIRGINIA DEPT OF TRANSPORTATION
LONG	LONGITUDINAL		
MAX	MAXIMUM	W/	WITH
MIN	MINIMUM	W/O	WITHOUT

GENERAL NOTES

1. THESE ARE GENERAL PROJECT NOTES THAT APPLY TO THE ENTIRE PROJECT INCLUDING ALL DISCIPLINES.
2. THE CONTRACTOR SHALL OBSERVE AND MAINTAIN BUILDING AND COMPOUND SECURITY REQUIREMENTS AS DIRECTED BY THE CONTRACTING OFFICER.
3. WORK SHALL BE CARRIED OUT DURING NON-WORKING HOURS (WORKING HOURS: 0600-1600). AS SUCH, THE CONTRACTOR SHALL TAKE APPROPRIATE MEASURES TO PHASE MECHANICAL WORK SO THAT HVAC EQUIPMENT IS OPERATIONAL DURING WORKING HOURS. TEMPORARY HEATING OR COOLING SHALL BE PROVIDED AS REQUIRED. THE CONTRACTOR SHALL SUBMIT A PHASING PLAN TO THE CONTRACTING OFFICER FOR APPROVAL PRIOR TO CONTRACT AWARD.
4. ALL ITEMS NOT NOTED AS "EXIST" SHALL BE PROVIDED AND INSTALLED UNDER THE REQUIREMENTS OF THIS CONTRACT.
5. THE CONTRACTOR LAYDOWN AREA SHALL BE COORDINATED WITH THE ACTIVITY BY THE CONTRACTING OFFICER PRIOR TO THE PRECONSTRUCTION MEETING. THE ALLOWABLE AREA SIZE SHALL BE ESTABLISHED BY THE CONTRACTING OFFICER.
6. ALL SUBMITTALS REQUIRED BY THESE PLANS OR SPECIFICATIONS SHALL BE SUBMITTED TO THE CONTRACTING OFFICER FOR APPROVAL PRIOR TO COMMENCEMENT OF RELATED WORK.

LIST OF SHEETS

SHEET NO.		NAVFAC DWG. NO.	SHEET TITLE
			GENERAL
1	G-001	12,911,894	COVER SHEET
			MECHANICAL
2	M-001	12,911,895	LEGEND, ABBREVIATIONS, AND GENERAL NOTES
3	MD101	12,911,896	DEMOLITION PLAN
4	M-101	12,911,897	NEW WORK PLAN
5	M-501	12,911,898	DETAILS AND SCHEDULES
6	M-701	12,911,899	CONTROLS
			ELECTRICAL
7	E-001	12,911,900	ELECTRICAL SYMBOLS, LEGENDS, ABBREVIATIONS & NOTES
8	ED101	12,911,901	PARTIAL ELECTRICAL FLOOR PLAN – DEMOLITION
9	ED701	12,911,902	PANELBOARD SCHEDULES – DEMOLITION
10	EP101	12,911,903	PARTIAL ELECTRICAL FLOOR PLAN
11	EP701	12,911,904	PANELBOARD SCHEDULES

SYM	DESCRIPTION	DATE	APPR

SEAL

A/E INFO.

APPROVED
FOR COMMANDER NAVFAC 2-6-26

ACTIVITY: USTRANSCOM

SATISFACTORY TO DATE 07/30/2024
DES RSK DRW RSK CHK DS
PM/DM DS/RSK
BRANCH MANAGER A. PILLO R.A.
CHIEF ENG/ARCH J.C. MILLER, PE
FIRE PROTECTION N/A

DEPARTMENT OF THE NAVY
NAVAL FACILITIES ENGINEERING COMMAND
HAMPTON ROADS IPT – PWD NORFOLK
NAVAL FACILITIES ENGINEERING COMMAND – MID-ATLANTIC
NAVAL BASE – NORFOLK, VA
NAVAL STATION NORFOLK, VIRGINIA
BLDG. SP-312 REPLACE CHILLER
COVER SHEET

SCALE: AS NOTED
EPROJECT NO.: 1624308
CONSTR. CONTR. NO. N/A
NAVFAC DRAWING NO. 12,911,894
SHEET 1 OF 11
G-001

DRAWFORM REVISION: 10 MARCH 2009

FILE NAME: P:\VA\NavalStationNorfolk\Buildings\SP\SP-312\2019_1624308_SP-312 Replace Chiller\B_Design\DWGS\Sheet\01_GEN\SP312-1624308-G-001.dwg LAYOUT NAME: G-001 PLOTTED: Thursday, February 12, 2026 - 5:59pm USER: robert.krele

MECHANICAL LEGEND

(T)	THERMOSTAT
[T]	TEMPERATURE SENSOR
(A) 150	AIR TERMINAL TAG WITH AIR FLOW (CFM)
(EX) 150	EXISTING AIR TERMINAL WITH AIR FLOW (CFM)
12x10	RECTANGULAR DUCT DIMENSIONS (INCHES)
12"ø	ROUND DUCT DIMENSION
	FLEXIBLE ROUND DUCT
	DOWNWARD DIRECTION OF SLOPED PIPING
	SUPPLY DUCT, SUPPLY DUCT DOWN/UP
	RETURN DUCT, RETURN DUCT DOWN/UP
	GATE VALVE
	GLOBE VALVE
	MANUAL FLOW CONTROL BALANCING VALVE
	CHECK VALVE
	PRESSURE REDUCING VALVE
	DRAIN VALVE WITH HOSE CONNECTION
	3-WAY CONTROL VALVE
	RELIEF VALVE
	BACKFLOW PREVENTER
	MANUAL AIR VENT
	AUTOMATIC AIR VENT
	VACUUM BREAKER
	STEAM TRAP
	WYE STRAINER
	VALVE IN VERT. PIPING
	STRAINER W/ BLOWDOWN VALVE
C.O.	CLEAN OUT
	PIPE ANCHOR
	PIPE GUIDE
	UNION
	THERMOMETER IN PIPE WELL
	PRESSURE GAUGE W/ SHUTOFF COCK
	PIPE CAP
	FLANGE
	FLEXIBLE PIPE CONNECTOR
	BALL VALVE
	PIPE TURNING DOWN
	PIPE TURNING UP

(1)	DEMOLITION WORK NOTE
[1]	NEW WORK NOTE
	LIMIT OF DEMOLITION
	POINT OF CONNECTION NEW TO EXISTING
	THIN LINE WEIGHT INDICATES EXISTING ITEM TO REMAIN
	HEAVY LINE WEIGHT INDICATES NEW WORK TO BE PROVIDED
	HEAVY DASHED LINE WEIGHT INDICATES EXISTING ITEM TO REMOVE, REFER TO DEMOLITION NOTES.
222	ROOM NUMBER
	SQUARE THROAT ELBOW WITH TURNING VANES
	VOLUME DAMPER
	FLEXIBLE DUCT CONNECTOR
SD	DUCT MOUNTED SMOKE DETECTOR
R	RISE IN DUCTWORK

MECHANICAL PIPING LEGEND

---(NAME)---	PIPING TO BE REMOVED
—CWR—	CHILLED WATER RETURN PIPING
—CWS—	CHILLED WATER SUPPLY PIPING
—D—	CONDENSATE DRAIN PIPING
—DCW—	DOMESTIC COLD WATER PIPING
—G—	NATURAL GAS PIPING
—HG—	HOT GAS BYPASS PIPING
—HPS—	HIGH PRESSURE STEAM PIPING
—HWR—	HOT WATER RETURN PIPING
—HWS—	HOT WATER SUPPLY PIPING
— RL —	REFRIGERANT LIQUID PIPING
— RS —	REFRIGERANT SUCTION PIPING

MECHANICAL SPECIFICATIONS

1. TESTING AND BALANCING OF THE NEW HVAC EQUIPMENT SHALL BE PROVIDED. CONTRACTOR SHALL OBTAIN THE SERVICES OF A LICENSED AABC, NEBB ASHRAE CONTRACTOR TO TEST, BALANCE AND ADJUST THE WATER DISTRIBUTION SYSTEMS. TAB CONTRACTOR SHALL SUBMIT A WRITTEN REPORT OF THE RESULTS FOR APPROVAL BY THE GOVERNMENT.
2. ELECTRICAL COMPONENTS, DEVICES AND ACCESSORIES SHALL BE LISTED AND LABELED AS DEFINED IN NFPA 70, ARTICLE 100, BY A TESTING AGENCY ACCEPTABLE TO THE AUTHORITIES HAVING JURISDICTION, AND SHALL BE MARKED FOR INTENDED USE.
3. PIPING: PROVIDE STEEL PIPING CONFORMING TO ASTM A53/A53M, SCHEDULE 40, THREADED OR WELDED CONNECTIONS.
4. ALL CHILLED WATER PIPING SHALL BE INSULATED WITH 1.5" CELLULAR GLASS THERMAL INSULATION COMPLYING WITH ASTM C 552, TYPE II, AND WITH ALL SERVICE ALUMINUM JACKET. PROVIDE WITH 3 MIL VAPOR BARRIER. INSULATION SHALL BE INSTALLED IN ACCORDANCE WITH THE MANUFACTURER'S INSTALLATION INSTRUCTIONS.
5. HVAC UNITS SHALL BE ARI CERTIFIED AND LISTED. ALL COMPONENTS SHALL BE FACTORY FABRICATED, INSTALLED AND TESTED. UNIT ENERGY/EFFICIENCY RATION (EER) AND COEFFICIENT OF PERFORMANCE (COP) SHALL BE EQUAL TO OR GREATER THAN PRESCRIBED BY ASHRAE 90.1, "ENERGY EFFICIENT DESIGN OF NEW BUILDINGS EXCEPT LOW RISE RESIDENTIAL BUILDINGS". UNITS SHALL INCLUDE MANUFACTURER'S STANDARD, BUT NOT LESS THAN FIVE-YEAR COMPRESSOR WARRANTY.
6. REQUIRED ELECTRONIC SUBMITTALS FROM THE CONTRACTOR FOR GOVERNMENT REVIEW AND APPROVAL: CHILLER, TESTING AND BALANCING REPORTS, PIPING AND PIPE INSULATION. ALL SUBMITTALS SHALL INCLUDE ELECTRONIC COPIES OF MANUFACTURER'S CUT SHEETS AND/OR SHOP DRAWINGS.
7. ALL CONTROL WIRING SHALL BE RUN CONCEALED. WIRING IN WALLS SHALL BE IN CONDUIT. ALL WIRING SHALL BE PLENUM RATED.
8. SLEEVES: SLEEVES SHALL BE INSTALLED WHERE PIPING PASSES THROUGH MASONRY CONSTRUCTION. SLEEVES SHALL BE METAL, SIZED TO ACCOMMODATE PIPING. SET SLEEVES FLUSH WITH FINISHED SURFACES.
9. CHILLER SHALL BE CONSTRUCTED AND RATED IN ACCORDANCE WITH AHRI 550/590 IP AND CONFORM TO ANSI/ASHRAE 15 AND 34. REFER TO AIR COOLED CHILLER SCHEDULE, DRAWING M-501 FOR BASIS OF DESIGN.

MECHANICAL ABBREVIATIONS

AC	ABOVE CEILING
AI	ANALOG INPUT
AFF	ABOVE FINISHED FLOOR
AMS	AIRFLOW MONITORING STATION
APD	AIR PRESSURE DROP
BFP	BACKFLOW PREVENTER
BTU	BRITISH THERMAL UNIT
C-1	CHILLER
CRAC-1	COMPUTER ROOM AIR CONDITIONING UNIT DESIGNATION
CRCU-1	COMPUTER ROOM CONDENSING UNIT DESIGNATION
CFM	CUBIC FEET PER MINUTE
DDC	DIRECT DIGITAL CONTROL
DN	DOWN
EAT	ENTERING AIR TEMPERATURE
EER	ENERGY EFFICIENCY RATIO
EF	EXHAUST FAN
EF-1	EXHAUST FAN DESIGNATION
ENT	ENTERING
ESP	EXTERNAL STATIC PRESSURE
ET-1	EXPANSION TANK DESIGNATION
EWH	ELECTRIC WATER HEATER
EWT	ENTERING WATER TEMPERATURE
FCU-1	FAN COIL UNIT DESIGNATION
°FDB	DEGREES FAHRENHEIT DRY BULB
°FWB	DEGREES FAHRENHEIT WET BULB
FPM	FEET PER MINUTE
FD	FLOOR DRAIN
FT	FEET
GPM	GALLONS PER MINUTE
H20	WATER
HP	HORSEPOWER
HZ	HERTZ
IN	INCHES
KW	KILOWATT
LPC	LOW PRESSURE CONDENSATE
LPS	LOW PRESSURE STEAM
LVG	LEAVING
MAX	MAXIMUM
MBH	ONE THOUSAND BTU'S
MCA	MINIMUM CIRCUIT AMPS
MFG	MANUFACTURER
MIN	MINIMUM
MTD	MOUNTED
NO.	NUMBER
OA	OUTSIDE AIR
PD	PRESSURE DROP
PH	PHASE
PSIG	POUNDS PER SQUARE INCH GAGE
RA	RETURN AIR
RPM	REVOLUTIONS PER MINUTE
RTU-1	ROOFTOP HVAC UNIT DESIGNATION
RTAC	ROOFTOP AIR CONDITIONING UNIT
SA	SUPPLY AIR
SEN	SENSIBLE
T'STAT	THERMOSTAT
TTL	TOTAL
TYP	TYPICAL
UON	UNLESS OTHERWISE NOTED
VEL	VELOCITY
VNG	VIRGINIA NATURAL GAS
WC	WATER COLUMN
WG	WATER GAUGE

GENERAL MECHANICAL NOTES

1. THESE GENERAL MECHANICAL NOTES APPLY TO THE ALL MECHANICAL DRAWINGS IN THIS SET. SHEET SPECIFIC NOTES ARE INDICATED ON EACH SHEET UNDER GENERAL SHEET NOTES.
2. PATCH ALL HOLES FROM REMOVAL OF PIPING, DUCTWORK, OR EQUIPMENT TO MATCH ADJACENT CONSTRUCTION.
3. PROVIDE ALL MATERIALS AND EQUIPMENT AND PERFORM ALL LABOR REQUIRED TO INSTALL COMPLETE AND OPERABLE MECHANICAL SYSTEMS AS INDICATED ON THE DRAWINGS, AS SPECIFIED AND AS REQUIRED BY CODE.
4. INSTALL ALL MECHANICAL EQUIPMENT AND APPURTENANCES IN ACCORDANCE WITH MANUFACTURER'S RECOMMENDATIONS, THIS CONTRACT'S DOCUMENTS, AND APPLICABLE CODES AND REGULATIONS.
5. PROVIDE VIBRATION ISOLATORS FOR ALL MECHANICAL EQUIPMENT TO PREVENT TRANSMISSION OF VIBRATION TO BUILDING STRUCTURE.
6. PROVIDE ACCESS PANELS IN WALLS AND CEILINGS, WHERE REQUIRED, TO SERVE FIRE DAMPERS, VALVES, SMOKE DETECTORS, AND OTHER CONCEALED MECHANICAL EQUIPMENT THAT REQUIRES ROUTINE MAINTENANCE. ACCESS PANELS BE LARGE ENOUGH TO ALLOW PROPER CLEARANCE FOR ACCESS DOORS.
7. ALL OPENINGS IN FIRE WALLS DUE TO DUCTWORK, PIPING, CONDUIT, ETC., SHALL BE FIRE STOPPED.
8. EXISTING DUCT AND PIPING SIZES INDICATED ARE APPROXIMATE. FIELD VERIFY ALL DIMENSIONS.
9. LOCATE ALL NEW HORIZONTAL DUCTWORK ABOVE THE SUSPENDED CEILINGS UNLESS OTHERWISE INDICATED.
10. ALL 90 DEGREE RECTANGULAR MITERED DUCT ELBOWS IN THE SUPPLY AND RETURN DUCTS SHALL HAVE TURNING VANES.
11. PROVIDE PIPE SLEEVES FOR ALL PIPING PENETRATIONS THRU WALLS AND FLOORS. EACH PIPE SHALL BE SEPARATELY SLEEVED. PROVIDE CONTINUOUS SEALANT JOINT AROUND PIPE SLEEVE, BOTH SIDES OF WALL, WATERTIGHT.
12. PROVIDE P-TRAPS IN CONDENSATE DRAIN PIPING AT EACH AHU UNLESS THE AHU IS EQUIPPED WITH AN INTERNAL TRAP.
13. MOUNT THERMOSTATS 48 INCHES ABOVE THE FINISHED FLOOR UNLESS OTHERWISE INDICATED. REFER TO ELECTRICAL DRAWINGS FOR LOCATION OF LIGHT SWITCHES AND COORDINATE.
14. EXTERIOR CONDENSATE DRAIN PIPING SHALL BE SCHEDULE 40 PVC. CLEANOUTS SHALL BE INSTALLED AT EACH CHANGE IN DIRECTION GREATER THAN 45 DEGREES. WHERE MORE THAN ONE CHANGE OF DIRECTION OCCURS IN A RUN OF PIPING, ONLY ONE CLEANOUT SHALL BE REQUIRED FOR EACH 40 FEET OF DEVELOPED LENGTH.
15. AFTER THE PIPING IS INSULATED, PROVIDE SETON BRAND OR EQUAL FACTORY-FABRICATED PIPE LABELS, WITH DIRECTION OF FLOW ARROWS, ON THE FOLLOWING PIPING, AT 10 FOOT ON CENTER ON THE PIPING MAINS AND 5 FOOT ON CENTER ON THE BRANCH RUNOUTS FROM MAINS.

PIPING TYPE	LABEL WORDING
CWS	CHILLED WATER SUPPLY
CWR	CHILLED WATER RETURN
D	CONDENSATE

SYM	DESCRIPTION	DATE	APPR

NAVFAC

SEAL

A/E INFO.

APPROVED
FOR COMMANDER NAVFAC 2-6-26

ACTIVITY
USTRANSCOM

SATISFACTORY TO DATE 07/30/2024
DES RSK DRW RSK CHK DS
PM/DM DS/RSK
BRANCH MANAGER A. PILLO R.A.
CHIEF ENG/ARCH J.C. MILLER, PE
FIRE PROTECTION N/A

DEPARTMENT OF THE NAVY
NAVAL FACILITIES ENGINEERING COMMAND
HAMPTON ROADS IPT - PWD NORFOLK

NAVAL FACILITIES ENGINEERING COMMAND - MID-ATLANTIC
NAVAL BASE - NORFOLK, VA

NAVAL STATION NORFOLK, VIRGINIA

BLDG. SP-312 REPLACE CHILLER

LEGEND, GENERAL NOTES AND ABBREVIATIONS

SCALE: AS NOTED
EPROJECT NO.: 1624308
CONSTR. CONTR. NO. N/A
NAVFAC DRAWING NO. 12,911,895
SHEET 2 OF 11

M-001

DRAWFORM REVISION: 10 MARCH 2009

FILE NAME: P:\VA\NavalStationNorfolk\Buildings\SP\SP-312\2019_1624308_SP-312 Replace Chiller\B_Design\DWGS\Sheet\12_MECH\SP312-1624308-M-001.dwg LAYOUT NAME: M-001 PLOTTED: Thursday, February 12, 2026 - 6:04am USER: robert.kreke

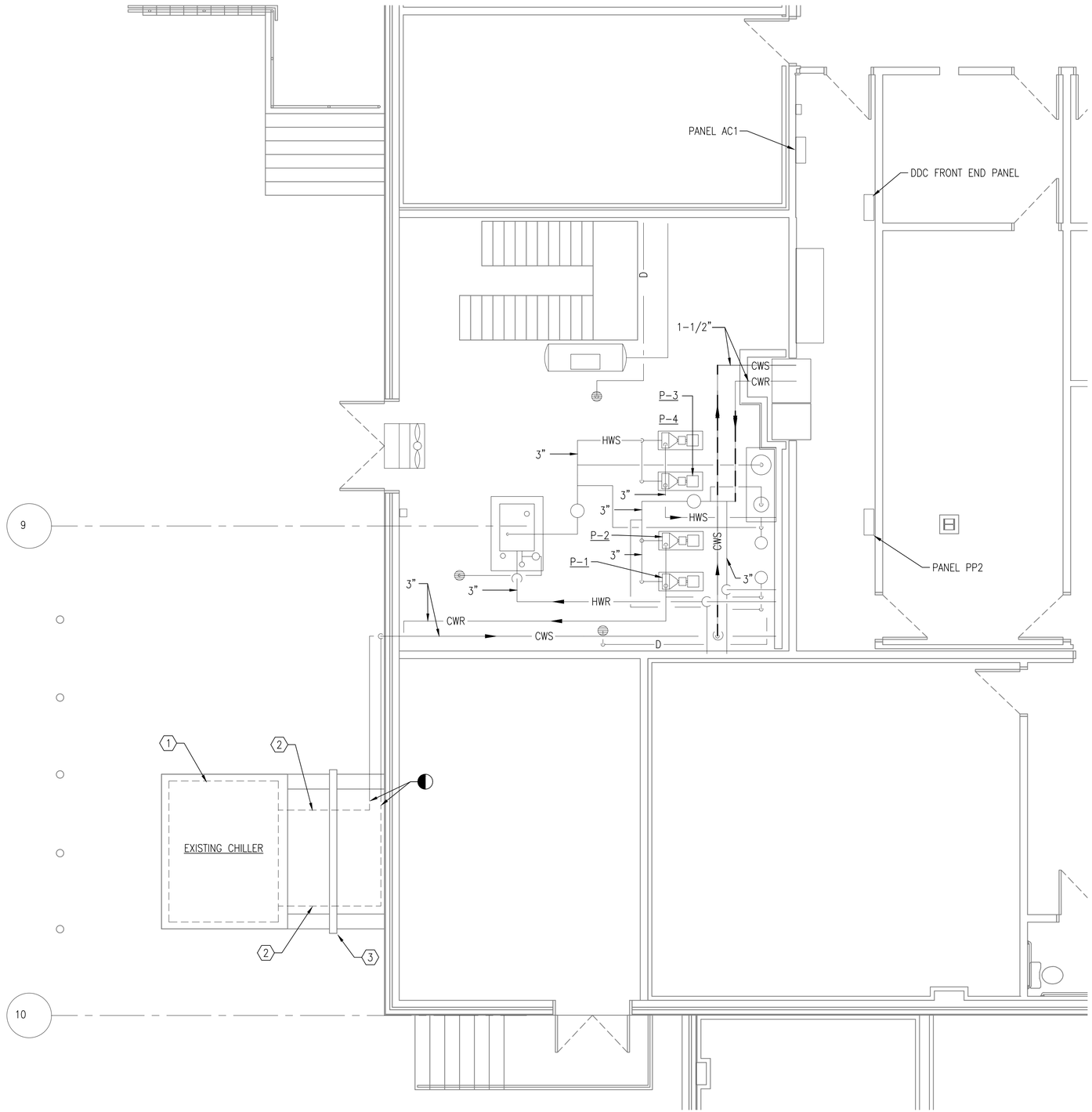

FLOOR PLAN - DEMOLITION

SCALE: 1/4" = 1'-0"

PLAN NORTH

GENERAL SHEET NOTES

1. REFER TO DRAWING M-001 FOR LEGEND, ABBREVIATIONS AND GENERAL NOTES.

DEMOLITION KEYNOTES

1. REMOVE EXISTING 50 TON AIR COOLED TRANE CHILLER COMPLETE.
2. REMOVE 3" CWS & CWR PIPING COMPLETE TO LIMITS AS INDICATED.
3. EXISTING STEEL SUPPORT FRAME.

KEYPLAN

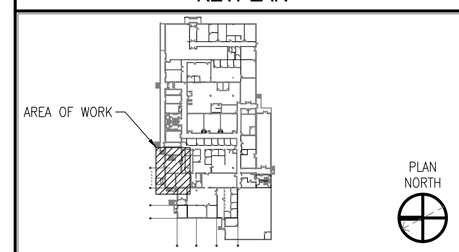

GRAPHIC SCALE

1/4"=1'-0" 0' 2' 4' 8'

SYM	DESCRIPTION	DATE	APPR

NAVFAC

SEAL

A/E INFO

APPROVED
FOR COMMANDER NAVFAC 2-6-26

ACTIVITY: USTRANSCOM

SATISFACTORY TO DATE 07/30/2024

DES RSK | DRW RSK | CHK DS

PM/DM DS/RSK

BRANCH MANAGER A. PILLO, R.A.

CHIEF ENG/ARCH J.C. MILLER, PE

FIRE PROTECTION N/A

DEPARTMENT OF THE NAVY
NAVAL FACILITIES ENGINEERING COMMAND
NAVAL FACILITIES ENGINEERING COMMAND ~MID-ATLANTIC
NAVAL BASE - NORFOLK, VA
NAVAL STATION HAMPTON ROADS PPT - PWD NORFOLK
NORFOLK, VIRGINIA

BLDG. SP-312 REPLACE CHILLER

DEMOLITION PLAN

SCALE: AS NOTED

EPROJECT NO.: 1624308

CONSTR. CONTR. NO. N/A

NAVFAC DRAWING NO. 12,911,896

SHEET 3 OF 11

MD101

DRAWFORM REVISION: 10 MARCH 2009

FILE NAME: P:\VA\NavalStationNorfolk\Buildings\SP\SP-312\2019_1624308_SP-312 Replace Chiller\B_Design\DWGS\Sheet\12_MECH\SP312-1624308-MD101.dwg LAYOUT NAME: MD101 PLOTTED: Thursday, February 12, 2026 - 6:10am USER: robert.krete

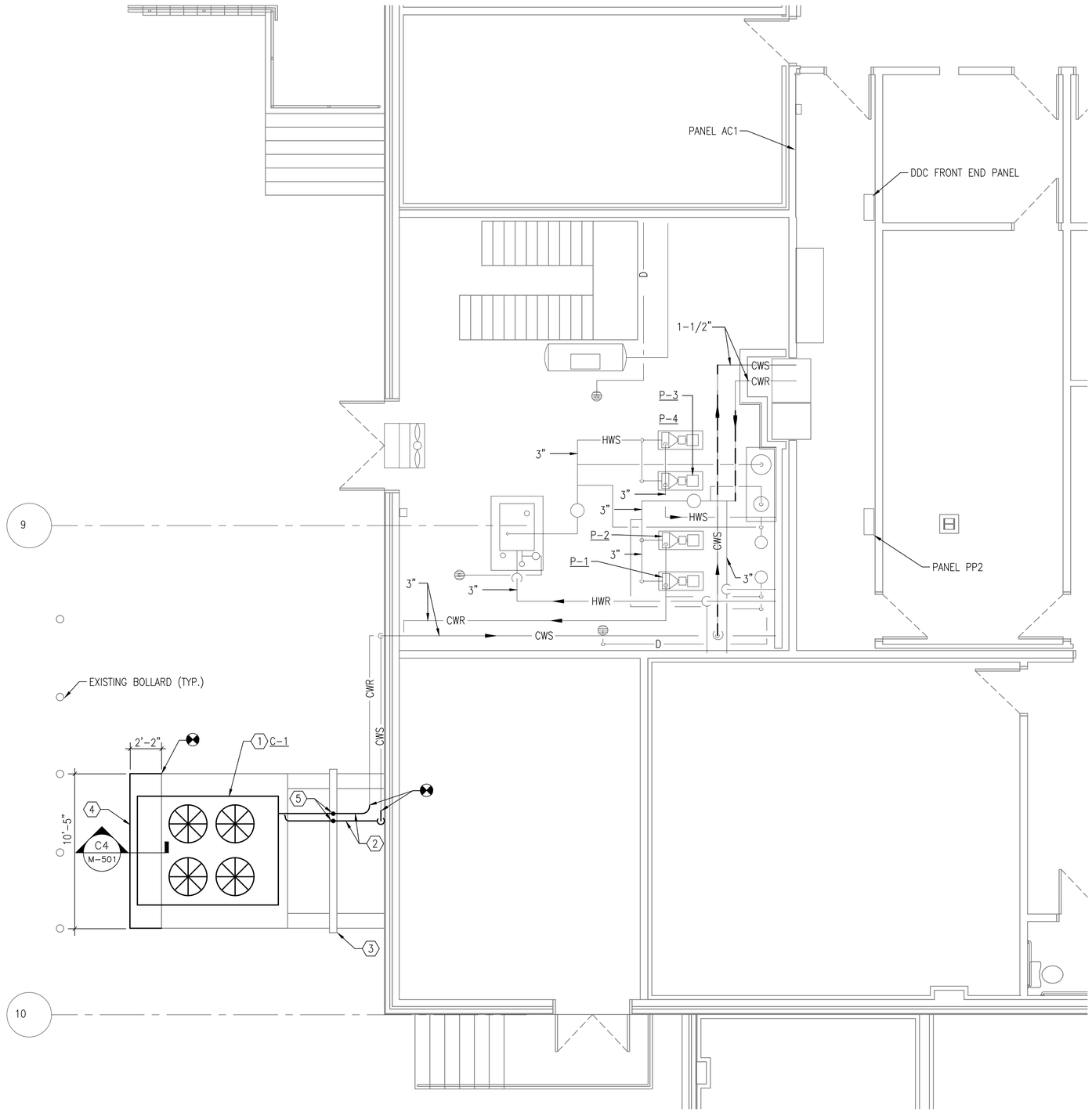

FLOOR PLAN - NEW WORK

SCALE: 1/4" = 1'-0"

PLAN NORTH

GENERAL SHEET NOTES

1. REFER TO DRAWING M-001 FOR LEGEND, ABBREVIATIONS AND GENERAL NOTES.

NEW WORK KEYNOTES

1. NEW 52 TON TRANE CHILLER. REFER TO CHILLER SCHEDULE, DRAWING M-501 FOR BASIS OF DESIGN.
2. NEW 3" CWS & CWR PIPING. CONNECT TO EXISTING PIPING WHERE INDICATED, REFER TO DETAIL C1/M-501. PROVIDE WITH HEAT TAPE, REFER TO DETAIL A1/M-501.
3. PAINT EXISTING STEEL SUPPORT FRAME. PREPARE EXISTING STEEL FRAME FOR PAINTING AS REQUIRED.
4. MODIFY EXISTING CONCRETE PAD AS NECESSARY TO MOUNT NEW CHILLER WITH REQUIRED CLEARANCES, REFER TO DETAIL C4/M-501.
5. PIPING SUPPORT, REFER TO DETAIL B3/M-501.

KEYPLAN

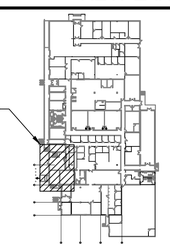

PLAN NORTH

GRAPHIC SCALE

1/4"=1'-0" 0' 2' 4' 8'

SYM	DESCRIPTION	DATE	APPR

SEAL

A/E INFO

APPROVED FOR COMMANDER NAVFAC 2-6-26

ACTIVITY: USTRANSCOM

SATISFACTORY TO DATE 07/30/2024

DES RSK | DRW RSK | CHK DS

PM/DM DS/RSK

BRANCH MANAGER A. PILLO, R.A.

CHIEF ENG/ARCH J.C. MILLER, PE

FIRE PROTECTION N/A

DEPARTMENT OF THE NAVY
NAVAL FACILITIES ENGINEERING COMMAND
NAVAL FACILITIES ENGINEERING COMMAND ~MID-ATLANTIC
NAVAL BASE – NORFOLK, VA
HAMPTON ROADS PPT – PWD NORFOLK
NAVAL STATION NORFOLK, VIRGINIA

BLDG. SP-312 REPLACE CHILLER

NEW WORK PLAN

SCALE: AS NOTED

EPROJECT NO.: 1624308

CONSTR. CONTR. NO. N/A

NAVFAC DRAWING NO. 12,911,897

SHEET 4 OF 11

M-101

DRAWFORM REVISION: 10 MARCH 2009

FILE NAME: P:\VA\NavalStationNorfolk\Buildings\SP\SP-312\2019_1624308_SP-312 Replace Chiller\B_Design\DWGS\Sheet\12_MECH\SP312-1624308-M-101.dwg LAYOUT NAME: M-101 PLOTTED: Wednesday, February 18, 2026 - 10:31am USER: robert.krete

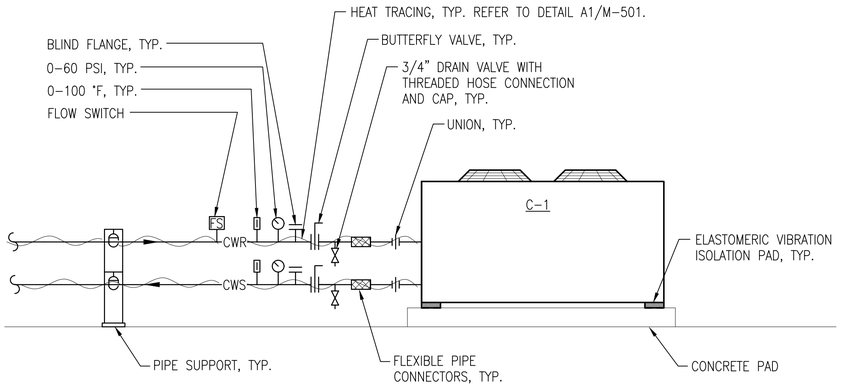

C1 DETAIL - AIR COOLED CHILLER

NOT TO SCALE — M-101

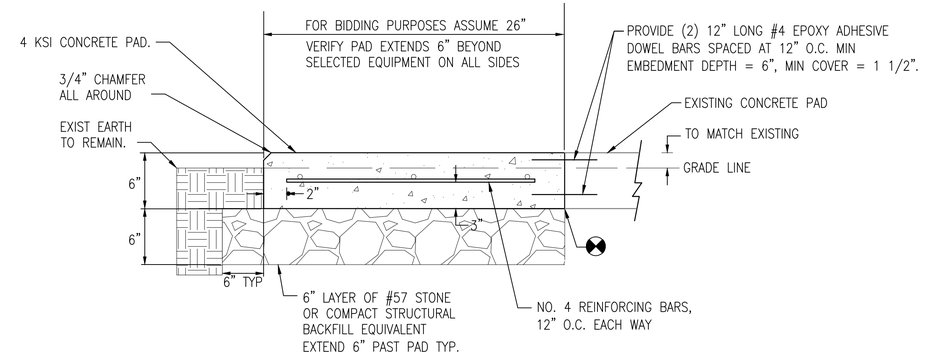

C4 DETAIL - EXTERIOR CONCRETE EQUIPMENT PAD

NOT TO SCALE — M-101

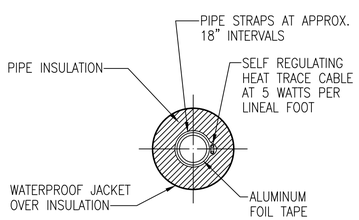

SECTION THRU PIPE

NO SCALE

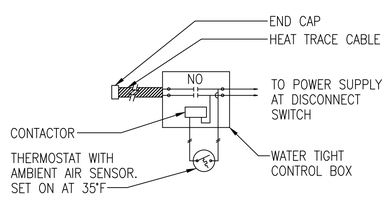

HEAT TRACE CONTROL BOX DIAGRAM

NO SCALE

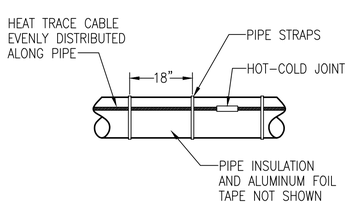

INSTALLATION DETAIL

NO SCALE

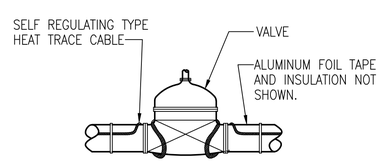

INSTALLATION AT VALVES

NO SCALE

NOTES: (1) PROVIDE WEATHER RESISTANT LABELING ON EXTERIOR OF JACKET IDENTIFYING PIPES AS BEING "ELECTRIC TRACED" WITH VOLTAGE INDICATED.

A1 DETAIL - TYPICAL HEAT TRACING

NOT TO SCALE — M-101

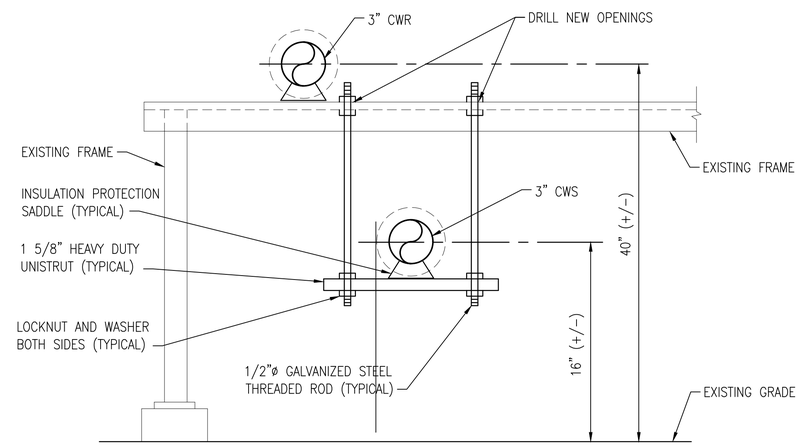

B4 DETAIL - SUPPORT FRAME DETAIL

NOT TO SCALE — M-101

AIR COOLED CHILLER SCHEDULE

MARK	MIN. CAPACITY (TONS)	COMPRESSOR TYPE	NO. OF REFRIG. CRKTS.	NO. OF CAPACITY STEPS	CONDENSER		EVAPORATOR					ELECTRICAL DATA					FULL LOAD EER	PART LOAD EER	NOTES
					EAT (°F)	NUMBER OF FANS	WATER TEMP. (°F) ENT.	WATER TEMP. (°F) LVG.	GPM	MAX. PD (FT. WATER)	FOULING FACTOR (HR)(SQ. FT.)(°F)/BTU	VOLTS	PHASE	HERTZ	MCA	MOCP			
C-1	52	SCROLL	2	4	95	4	55	45	149	26.1	0.00010	460	3	60	106	125	10.72	15.5	1,2,3,4,5

NOTES:

1. SELECTION BASED ON TRANE CGAM052F2**3AXD2A1A1A1DXA1C1A4XXXXXXA1A3A1D1XXLX OR APPROVED EQUAL.
2. PROVIDE CHILLER WITH THE FOLLOWING FACTORY INSTALLED OPTIONS: HIGH EFFICIENCY PERFORMANCE, LOW AMBIENT CAPABILITY (0 DEG), FLEXIBLE DIPPED AND BAKED EPOXY-COATED CONDENSER COILS, LOW NOISE FANS, ACROSS-THE-LINE STARTER, GFI CONVENIENCE OUTLET, TERMINAL BLOCK CONNECTION, SINGLE POINT POWER CONNECTION, ALARM RELAY OUTPUTS, COMPRESSOR SOUND ATTENUATION, AND ARCHITECTURAL PANELS AND OTHER OPTIONS INDICATED BY THE UNIT MODEL NUMBER.
3. PROVIDE CHILLER WITH THE FOLLOWING FIELD INSTALLED OPTIONS: DISCONNECT SWITCH, 110V CONVENIENCE OUTLET, ELASTOMERIC VIBRATION ISOLATORS AND COUPLING KIT FOR WATER CONNECTIONS.
4. PROVIDE FACTORY START-UP.
5. PROVIDE WITH BACNET INTERFACE.

SYM	DESCRIPTION	DATE	APPR

NAVFAC

SEAL

A/E INFO

APPROVED FOR COMMANDER NAVFAC 2-6-26

ACTIVITY: USTRANSCOM

SATISFACTORY TO DATE 07/30/2024

DES RSK DRW RSK CHK DS

PM/DM DS/RSK

BRANCH MANAGER A. PILLO, R.A.

CHIEF ENG/ARCH J.C. MILLER, PE

FIRE PROTECTION N/A

DEPARTMENT OF THE NAVY
NAVAL FACILITIES ENGINEERING COMMAND
NAVAL FACILITIES ENGINEERING COMMAND – MID-ATLANTIC
NAVAL BASE – NORFOLK, VA
HAMPTON ROADS PT – PWD NORFOLK
NAVAL STATION NORFOLK, VIRGINIA

BLDG. SP-312 REPLACE CHILLER

DETAILS AND SCHEDULES

SCALE: AS NOTED

EPROJECT NO.: 1624308

CONSTR. CONTR. NO. N/A

NAVFAC DRAWING NO. 12,911,898

SHEET 5 OF 11

M-501

DRAWFORM REVISION: 10 MARCH 2009

FILE NAME: P:\VA\NavalStationNorfolk\Buildings\SP\SP-312\2019_1624308_SP-312 Replace Chiller\B_Design\DWGS\Sheet\12_MECH\SP312-1624308-M-501.dwg LAYOUT NAME: M-501 PLOTTED: Wednesday, February 18, 2026 - 10:30am USER: robert.kreie

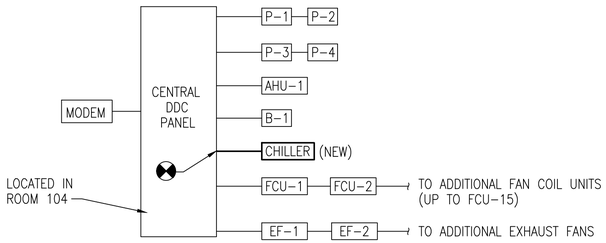

EXISTING DDC SYSTEM ARCHITECTURE

NOT TO SCALE

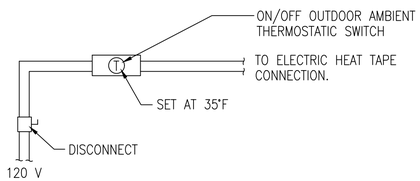

HEAT TAPE CONTROL DIAGRAM

NOT TO SCALE

SEQUENCE OF OPERATION

CHILLED WATER SYSTEM (PUMPS AND CHILLER)

THE CHILLED WATER SYSTEM SHALL BE ENABLED AND DISABLED BY THE DDC SYSTEM. THE CHILLED WATER SYSTEM SHALL ALSO BE ENABLED IF A CALL FOR COOLING IS RECEIVED IN THE UNOCCUPIED MODE.

THE CHILLER SHALL OPERATE BY ITS INTEGRAL FACTORY CONTROLS AND SAFETIES TO DELIVER 44°F WATER TO THE CHILLED WATER SYSTEM SUPPLY.

PUMPS SHALL BE CONTROLLED BY THE DDC SYSTEM. THE DDC SYSTEM SHALL MONITOR THE CHILLER CONTROLLER FOR PUMP COMMANDS. THE CHILLED WATER PUMPS SHALL OPERATE IN A RUN/STANDBY ARRANGEMENT. SELECTION OF THE RUN PUMP SHALL BE EVALUATED ON A WEEKLY BASIS. THE PUMP WITH THE LEAST RUN TIME SHALL BE THE RUN PUMP. IF THE RUN PUMP FAILS, IT SHALL BE DE-ENERGIZED, AN ALARM SHALL BE INITIATED AT THE CENTRAL CONTROL PANEL, AND THE STANDBY PUMP SHALL BE ENABLED. PUMP STATUS SHALL BE MONITORED.

HEAT TAPE CONTROLS:
THE OUTSIDE AIR THERMOSTAT SHALL PROVIDE MASTER CONTROL OVER THE COMMON HEAT TAPE CIRCUITS. WHEN THE OUTSIDE AIR TEMPERATURE FALLS BELOW 35°F (ADJ.), THE AMBIENT AIR THERMOSTAT SHALL ENERGIZE THE HEATING TAPE CIRCUITS. WHENEVER THE OUTSIDE AIR TEMPERATURE RISES ABOVE 35°F, THE HEATING TAPE CIRCUITS SHALL BE DE-ENERGIZED.

CONTROL LEGEND

MD	MOTORIZED DAMPER
TS	TEMPERATURE SENSOR
DPS	DIFFERENTIAL PRESSURE SENSOR
MS	MOTOR STARTER
CSR	CURRENT SENSOR RELAY
T	SPACE TEMPERATURE SENSOR
AO	ANALOG OUTPUT
AI	ANALOG INPUT
DO	DIGITAL OUTPUT
DI	DIGITAL INPUT
AF	AIRFLOW SENSOR
SP	STATIC PRESSURE SENSOR
SD	SMOKE DETECTOR
VFD	VARIABLE FREQUENCY DRIVE
FS	FLOW SWITCH

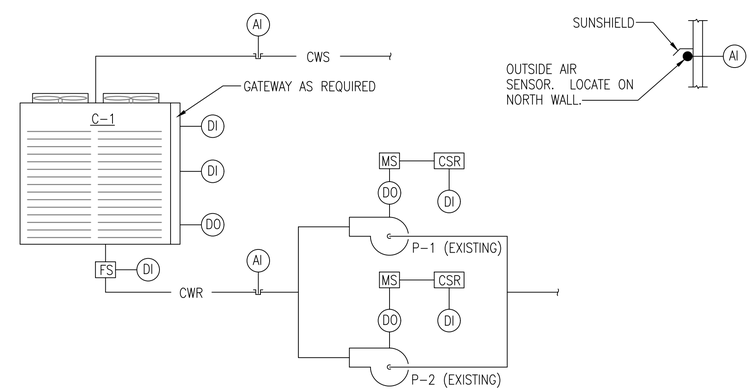

ANALOG INPUT	DIGITAL INPUT	DIGITAL OUTPUT
CHILLED WATER SUPPLY TEMPERATURE	P-1 PUMP STATUS	CHILLER START/STOP
CHILLED WATER RETURN TEMPERATURE	P-2 PUMP STATUS	PUMP START/STOP (P-1)
OUTSIDE AIR TEMPERATURE	CHILLER STATUS	PUMP START/STOP (P-2)
	CHILLER ALARM	
	FLOW SWITCH STATUS	

DIAGRAM - C-1 AND CHILLED WATER SYSTEM CONTROL

NOT TO SCALE

SYM	DESCRIPTION	DATE	APPR

NAVFAC

SEAL

A/E INFO

APPROVED
FOR COMMANDER NAVFAC 2-6-26

ACTIVITY
USTRANSCOM

SATISFACTORY TO DATE 07/30/2024
DES RSK DRW RSK CHK DS
PM/DM DS/RSK
BRANCH MANAGER A. PILLO, R.A.
CHIEF ENG/ARCH J.C. MILLER, PE
FIRE PROTECTION N/A

DEPARTMENT OF THE NAVY
NAVAL FACILITIES ENGINEERING COMMAND
HAMPTON ROADS PPT - PWD NORFOLK
NAVAL FACILITIES ENGINEERING COMMAND ~MID-ATLANTIC
NAVAL BASE - NORFOLK, VA
NAVAL STATION NORFOLK, VIRGINIA
BLDG. SP-312 REPLACE CHILLER
CONTROLS

SCALE: AS NOTED
EPROJECT NO.: 1624308
CONSTR. CONTR. NO. N/A
NAVFAC DRAWING NO. 12,911,899
SHEET 6 OF 11
M-701

DRAWFORM REVISION: 10 MARCH 2009

FILE NAME: P:\VA\NavalStationNorfolk\Buildings\SP\SP-312\2019_1624308_SP-312 Replace Chiller\B_Design\DWGS\Sheet\12_MECH\SP312-1624308-M-701.dwg LAYOUT NAME: M-701 PLOTTED: Thursday, February 12, 2026 - 6:36am USER: robert.kreie

ELECTRICAL LEGEND

GENERAL

(#) DEMOLITION NOTE TAG – REFER TO "DEMOLITION KEYNOTES" FOR EACH SHEET

SPECIALTY NOTE – REFER TO "SPECIALTY NOTES" FOR EACH SHEET

GENERAL NOTE – REFER TO "GENERAL NOTES" FOR EACH SHEET

OBJECTS ON DRAWING AT THIS LINETYPE ARE CATEGORIZED AS PROPOSED FOR CONSTRUCTION, UON.

OBJECTS ON DRAWING AT THIS LINETYPE ARE CATEGORIZED AS EXISTING TO BE REMOVED–DEMOLISHED, UON.

POWER

DUPLEX CONVENIENCE RECEPTACLE. 15A., 125V. MOUNT 18" AFF UON. GFI = GROUND FAULT PROTECTION.

EQUIPMENT CONNECTIONS

(E) EQUIPMENT CONNECTION.

3P 30/20 3R DISCONNECT SWITCH. 3P = # OF POLES, 30 = SWITCH RATING (NF=INDICATES NON–FUSED), 3R=NEMA RATING.

WIRE, CONDUIT, AND RACEWAY

BRANCH CIRCUIT OR FEEDER WIRING IN CONDUIT. NO TICK MARKS INDICATE 2–#12 CONDUCTORS & 1–#12 GND IN 1/2"C, UON.

A-1,2,3 HOMERUN TO PANEL. PANEL & CIRCUIT DESIGNATION AS INDICATED.

DISTRIBUTION

ELECTRICAL PANELBOARD (277/480V).

ELECTRICAL PANELBOARD (120/208V).

ABBREVIATIONS

1/C	ONE CONDUCTOR
AFF	ABOVE FINISHED FLOOR
AFG	ABOVE FINISHED GRADE
ARCI	ARC–FAULT CIRCUIT INTERRUPTER
ARF	ABOVE RAISED FLOOR
BKR	BREAKER
C	CONDUIT
CB	CIRCUIT BREAKER
CKT	CIRCUIT
DWG	DRAWING
EA	EACH
EC	EMPTY CONDUIT
ELEC	ELECTRICAL
EMT	ELECTRICAL METALLIC TUBING
ENCL	ENCLOSURE
EQUIP	EQUIPMENT
EWC	ELECTRIC WATER COOLER
EWH	ELECTRIC WATER HEATER
EXIST	EXISTING
EXP	EXPLOSION PROOF EQUIPMENT
FCU	FAN COIL UNIT
FT	FEET
GFCI	GOVERNMENT FURNISHED CONTRACTOR INSTALLED
GFE	GOVERNMENT FURNISHED EQUIPMENT
GFGI	GOVERNMENT FURNISHED GOVERNMENT INSTALLED
GFI	GROUND FAULT INTERRUPTER
GND	GROUND
HGT	HEIGHT
HH	HANDHOLE
HID	HIGH INTENSITY DISCHARGE
HUB	COMPUTER DISTRIBUTION HUB
LTS	LIGHTS
MCB	MAIN CIRCUIT BREAKER
MDP	MAIN DISTRIBUTION PANEL
MECH	MECHANICAL
MH	MANHOLE
MLO	MAIN LUGS ONLY
MTD	MOUNTED
MTG HT	MOUNTING HEIGHT
NEC	NATIONAL ELECTRICAL CODE
NIC	NOT IN CONTRACT
NL	NIGHT LIGHT
NTS	NOT TO SCALE
OBI	OUTLET BASE INFEED
PNL	PANEL
PNLBD	PANELBOARD
PVC	POLYVINYL CHLORIDE CONDUIT
QU	QUANTITY
REC	RECEPTACLE
REQ' D	REQUIRED
RGS	RIGID GALVANIZED STEEL
RM	ROOM
SHT	SHEET
SUB	SUBSTATION
T	TELEPHONE
TYP	TYPICAL
UG	UNDERGROUND
UON	UNLESS OTHERWISE NOTED
W	WIRE
WP	WEATHERPROOF
WW	WIREWAY (TROUGH)
X	IN SCHEDULES, ITEM NOT APPLICABLE
XFMR	TRANSFORMER

GENERAL DEMOLITION NOTES

1. ALL EQUIPMENT SHOWN WITH DASHED LINE SHALL BE REMOVED, UON.
2. ALL WIRING TO EQUIPMENT SHALL BE REMOVED, UON.
3. ALL CONDUIT CONCEALED IN WALLS AND SLABS SHALL BE BLANKED OFF AND ABANDONED IN PLACE. PATCH ALL WALLS AND SLABS AFTER DEMOLITION IS COMPLETE.
4. ALL BOXES DISCONTINUED SHALL BE BLANKED OFF OR REMOVED AND DEVICES REMOVED.
5. EXISTING ELECTRICAL EQUIPMENT NOT INDICATED ON DEMOLITION PLAN SHALL REMAIN CONNECTED FOR CONTINUED USE.
6. CONTRACTOR SHALL RECONNECT ANY EXISTING CIRCUIT (INTERRUPTED BY REMOVAL OF AN EXISTING DEVICE) TO THE REMAINING ELECTRICAL EQUIPMENT LOCATED DOWNSTREAM FROM THE POINT OF INTERRUPTION.

GENERAL NOTES

1. ALL ELECTRICAL WORK AND MATERIAL IS NEW AND MUST BE PROVIDED BY THE CONTRACTOR UON.
2. AN EQUIPMENT GROUND WIRE MUST BE RUN WITH FEEDER AND BRANCH CIRCUITS.
3. WIRING MUST BE AS PER THE NATIONAL ELECTRIC CODE (NEC).
4. FEEDERS/CIRCUITS MUST BE IDENTIFIED AT EACH END OF THE WIRE AND AT EVERY SPLICE OR JUNCTION BOX PULL.
5. PROVIDE NAMEPLATES ON THE EXTERIOR OF ELECTRICAL PANELS AND ENCLOSURES AS FOLLOWS:

PANEL LP1A	DEVICE I.D.
100A, 120/208V–3ø, 4W	DEVICE RATING
FEEDS FROM PANEL MDP	POWER SOURCE
INSTALLED 1996	INSTALLATION DATE
DRAWING NO. 15,350	NAVFAC DRAWING NUMBER

FOR DISCONNECTS WITCHES AND MOTOR STARTERS, THE TOP LINE SHALL BE THE NAME/DESIGNATION OF EQUIPMENT BEING FFED BY THE SAME.

6. PROVIDE NEW TYPED DIRECTORIES FOR PANELS (NEW OR EXISTING) INCLUDED IN THIS PROJECT.
7. INTERIOR WIRING SYSTEMS MUST BE CONCEALED WITH FLUSH MOUNTED BOXES/DEVICES, UON.
8. DRAWINGS ARE BASED ON EXISTING BUILDING PLANS AND FIELD INVESTIGATIONS. CONTRACTOR MUST VISIT THE EXISTING BUILDING AND ACQUAINT HIMSELF/HERSELF WITH THE EXISTING CONDITIONS. CONTRACTOR MUST EXAMINE DRAWINGS TO AVOID CONFLICTS.
9. ELECTRICAL DEVICES SHOWN BUT NOT CIRCUITED MUST REMAIN ON THEIR EXISTING CIRCUIT.
10. PROVIDE ARC–FLASH LABEL ON PANELS/DISCONNECT SWITCHES AS PER UFC 3–56–01 AND NFPA 70E. SEE DETAIL ON SHEET E–001.
11. SINGLE PHASE (120/208) BRACH CIRCUITS MUST CONSIST OF 2#12 & 1#12 IN 1/2"C, UON.
12. REFER TO PLANS FOR CONDUCTOR SIZING. COMPLY WITH THE FOLLOWING GUIDELINES FOR CONDUCTOR RUN LENGTHS, UON

    20A, 120V CIRCUITS LONGER THAN 100' – USE #10 AWG TO LIMIT VOLTAGE DROP ON BRANCH CIRCUITS TO 3%

    20A, 120V CIRCUITS LONGER THAN 150' – USE #8 AWG TO LIMIT VOLTAGE DROP TO BRANCH CIRCUITS TO 3%

    20A, 277V CIRCUITS LONGER THAN 150' – USE 10 AWG TO LIMIT VOLTAGE DROP ON BRACH CIRCUITS TO 3%
13. COORDINATE ELECTRICAL WORK WITH ARCHITECTURAL, MECHANICAL, AND FIRE PROTECTION WORK PRIOR TO FABRICATION AND INSTALLATION TO PREVENT CONFLICTS. NOTIFY CONTRACTING OFFICER WHERE CONFLICTS ARE DISCOOVERED PRIOR TO CONSTRUCTION AND BEFORE BEGINNING WORK IN THOSE AREAS. ALL CONFLICTS THAT ARISE DUE TO LACK OF COORDINATION MUST BE RECTIFIED BY THE CONTRACTOR AT NO COST TO THE GOVERNMENT.

CONSTRUCTION NOTES

1. CONTRACTOR MUST PROVIDE A MINIMUM OF 2 WEEKS NOTICE OF POWER OUTAGES TO ACTIVITY AND GOVERNMENT OFFICIAL.

MARK	DESCRIPTION	DATE

NAVFAC

SEAL

A/E INFO

APPROVED

FOR COMMANDER NAVFAC 2024-07-30

ACTIVITY: USTRANSCOM

SATISFACTORY TO DATE 07/30/24

DES DNB | DRW DNB | CHK JMG

PM/DM DS/RSK

BRANCH MANAGER J.MORTON,P.E.

CHIEF ENG/ARCH J.C. MILLER, P.E.

FIRE PROTECTION N/A

DEPARTMENT OF THE NAVY
NAVAL FACILITIES ENGINEERING COMMAND
PWD NORFOLK

NAVAL FACILITIES ENGINEERING SYSTEMS COMMAND
NAVAL FACILITIES ENGINEERING COMMAND ~ MID-ATLANTIC
NAVAL STATION - NORFOLK, VIRGINIA

NAVAL STATION NORFOLK, VIRGINIA

BLDG. SP-312 REPLACE CHILLER

ELECTRICAL SYMBOLS, LEGEND, ABBREVIATIONS, AND NOTES

SCALE: AS NOTED

EPROJECT NO.: 1624308

CONSTR. CONTR. NO. N/A

NAVFAC DRAWING NO. 12,911,900

SHEET 7 OF 11

E-001

DRAWFORM REVISION: 14 SEP 2023

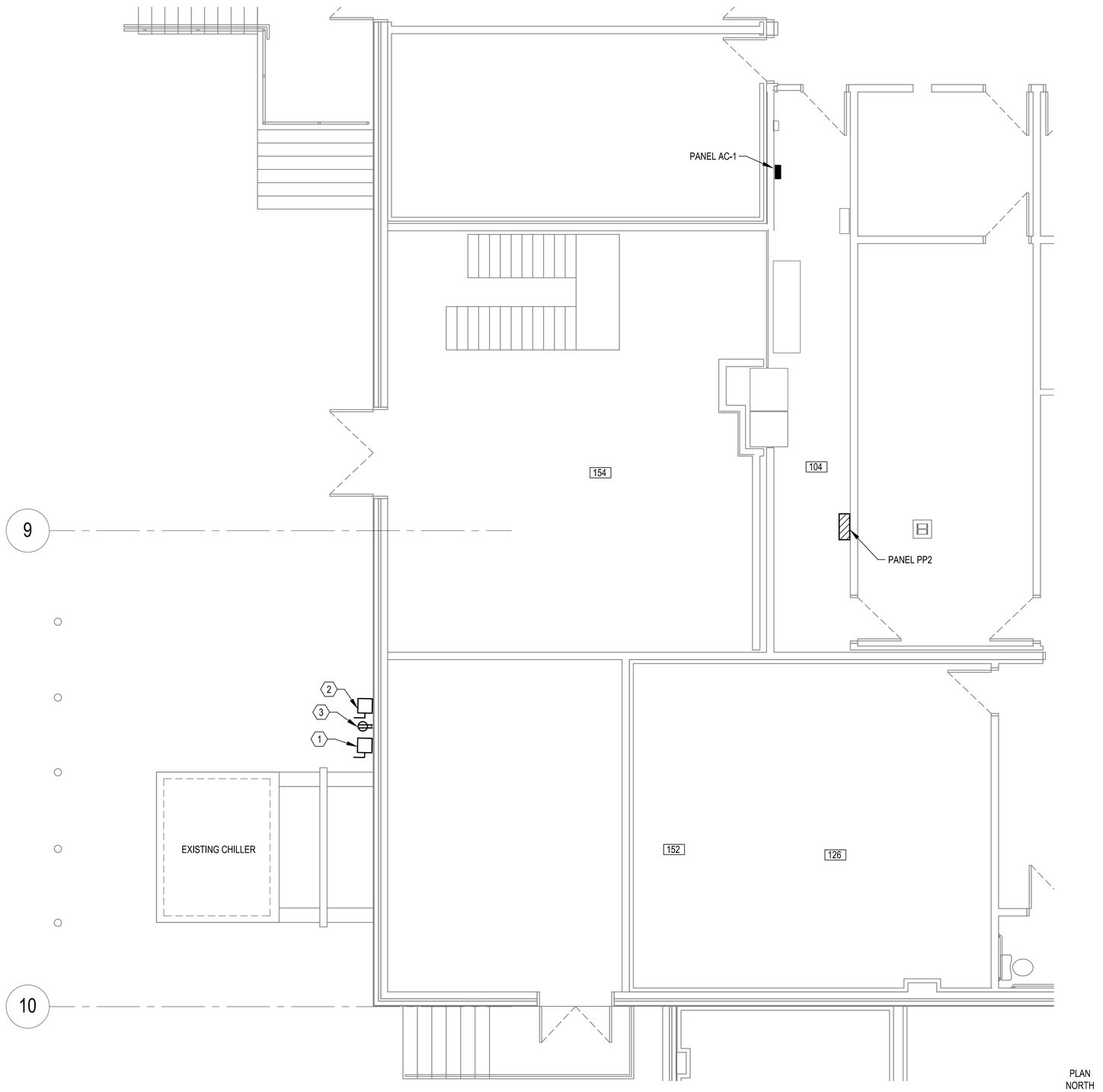

FLOOR PLAN - DEMOLITION

SCALE: 1/4" = 1'-0"

GENERAL SHEET NOTES

1. REFER TO SHEET E-001 FOR SYMBOLS, LEGEND, ABBREVIATIONS AND GENERAL NOTES.
2. CHILLER POWERED FROM FROM CIRCUIT AC-1-13 LOCATED IN THE ELECTRICAL ROOM (ROOM 104).
3. CHILLER HEAT TAPE POWERED FROM CIRCUIT PP2-12 LOCATED IN THE ELECTRICAL ROOM (ROOM 104).
4. RECEPTACLE POWERED FROM CIRCUIT PP2-28 AND IS EXISTING TO REMAIN.
5. EXISTING PANEL AC-1 IS A SIEMENS TYPE S3, 600A, 480/277V, 3PH, 3W, 42 CCT PANELBOARD.
6. EXISTING PANEL PP2 IS A SQUARE-D, 225A, 208/120V, 3PH, 4W, 42 CCT PANELBOARD.

NEW WORK KEYNOTES

1. DEMOLISH DISCONNECT SWITCH, WIRING, AND CONDUIT BACK TO SOURCE FOR CHILLER.
2. DEMOLISH DISCONNECT SWITCH, WIRING, AND CONDUIT BACK TO SOURCE FOR HEAT TAPE.
3. EXISTING RECEPTACLE CIRCUIT TO REMAIN.

KEYPLAN

AREA OF WORK

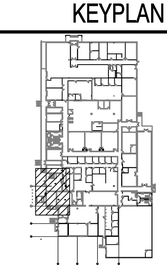

PLAN NORTH

GRAPHIC SCALE

1/4"=1'-0" 0' 2' 4' 8'

MARK	DESCRIPTION	DATE

SEAL

A/E INFO

APPROVED

FOR COMMANDER NAVFAC

ACTIVITY: USTRANSCOM

SATISFACTORY TO DATE 07/30/24

DES DNB | DRW DNB | CHK JMG

PM/DM DS/RSK

BRANCH MANAGER J. MORTON, P.E.

CHIEF ENG/ARCH J.C. MILLER, P.E.

FIRE PROTECTION N/A

DEPARTMENT OF THE NAVY
NAVAL FACILITIES ENGINEERING COMMAND
PWD NORFOLK

NAVAL FACILITIES ENGINEERING SYSTEMS COMMAND
NAVAL STATION - NORFOLK, VIRGINIA
NAVAL FACILITIES ENGINEERING COMMAND ~ MID-ATLANTIC

NAVAL STATION NORFOLK, VIRGINIA

BLDG. SP-312 REPLACE CHILLER

PARTIAL ELECTRICAL FLOOR PLAN - DEMOLITION

SCALE: AS NOTED

EPROJECT NO.: 1624308

CONSTR. CONTR. NO. N/A

NAVFAC DRAWING NO. 12,911,901

SHEET 8 OF 11

ED101

DRAWFORM REVISION: 14 SEP 2023

PANEL AC-1 SCHEDULE

EXISTING

600 AMP BUS 600A MCB 480/277 WYE VOLTS 3PH. 4W. SN, 60HZ MIN. 25KAIC SURFACE MOUNTED

LOAD SERVED	LOAD A	LOAD B	LOAD C	BKR TRIP	WIRE SIZE	CKT NO.	CKT NO.	WIRE SIZE	BKR TRIP	LOAD A	LOAD B	LOAD C	LOAD SERVED
EXHAUST FAN (MECH RM) .5HP	1			15	12	1	2	12	15	4			AIR COMPRESSOR (MECH RM) 2.5 HP
		1					4				4		
			1				6					4	
EXHAUST FAN (BATHROOM) 1HP	3			30	12	3	8	10	30	11			COLD WTR PUMP (CWP-1) 7.5 HP
		3					10				11		
			3				12					11	
COLD WATER PUMP (CWR-1) 7.5HP	11			30	10	5	14		35	0			SPARE
		11					16				0		
			11				18					0	
AC ON ROOF (OAU-1)	41			80	6	7	20		35	0			SPARE
		41					22				0		
			41				24					0	
HOT WTR PUMP (HWP-1) 3HP	5			20	12	9	26	4	70	54			PANEL L VIA 45KVA XFMR
		5					28				54		
			5				30					54	
HOT WTR PUMP (HWP-2) 3HP	5			20	12	11	32						SPACE
		5					34						
			5				36						
(1) CHILLER (ACC1)	68			150	3	13	38	4	225	125			AC-2
		68					40				125		
			68				42					125	
SIEMAN'S TYPE S3 PANEL FEED PANEL MDP. CKT 10	134	134	134							194	194	194	

TOTAL CONNECTED LOAD (AMPS)

A= 328
B= 328
C= 328

GENERAL SHEET NOTES

1. REFER TO SHEET E-001 FOR DEMOLITION NOTES.
2. ALL MATERIAL REMOVED UNDER DEMOLITION SHALL BECOME THE PROPERTY OF THE CONTRACTOR AND REMOVED COMPLETELY OFF-SITE UNLESS NOTED OTHERWISE.
3. CIRCUITS SHOWN ARE BASED ON FIELD AND DRAWING INVESTIGATIONS. CONTRACTOR SHALL VERIFY ALL CIRCUITS PRIOR TO DEMOLITION.
4. PANEL AC-1 IS POWERED FROM PANEL MDP, CKT 10.
5. PANEL SCHEDULE IS SHOWN FOR REFERENCE PURPOSES ONLY.

DEMOLITION KEYNOTES

1. DEMOLISH CIRCUIT BREAKER, CONDUIT, AND WIRING TO CHILLER.

MARK | DESCRIPTION | DATE

SEAL

A/E INFO

APPROVED

FOR COMMANDER NAVFAC

ACTIVITY: USTRANSCOM

SATISFACTORY TO DATE 07/30/24

DES DNB | DRW DNB | CHK JMG

PM/DM DS/RSK

BRANCH MANAGER J.MORTON,P.E.

CHIEF ENG/ARCH J.C.MILLER, P.E.

FIRE PROTECTION N/A

DEPARTMENT OF THE NAVY
NAVAL FACILITIES ENGINEERING SYSTEMS COMMAND
NAVAL FACILITIES ENGINEERING SYSTEMS COMMAND ~ MID-ATLANTIC
NAVAL STATION - NORFOLK, VIRGINIA
PWD NORFOLK

NAVAL STATION NORFOLK, VIRGINIA

BLDG. SP-312 REPLACE CHILLER

PANELBOARD SCHEDULES - DEMOLITION

SCALE: AS NOTED

EPROJECT NO.: 1624308

CONSTR. CONTR. NO. N/A

NAVFAC DRAWING NO. 12,911,902

SHEET 9 OF 11

ED701

DRAWFORM REVISION: 14 SEP 2023

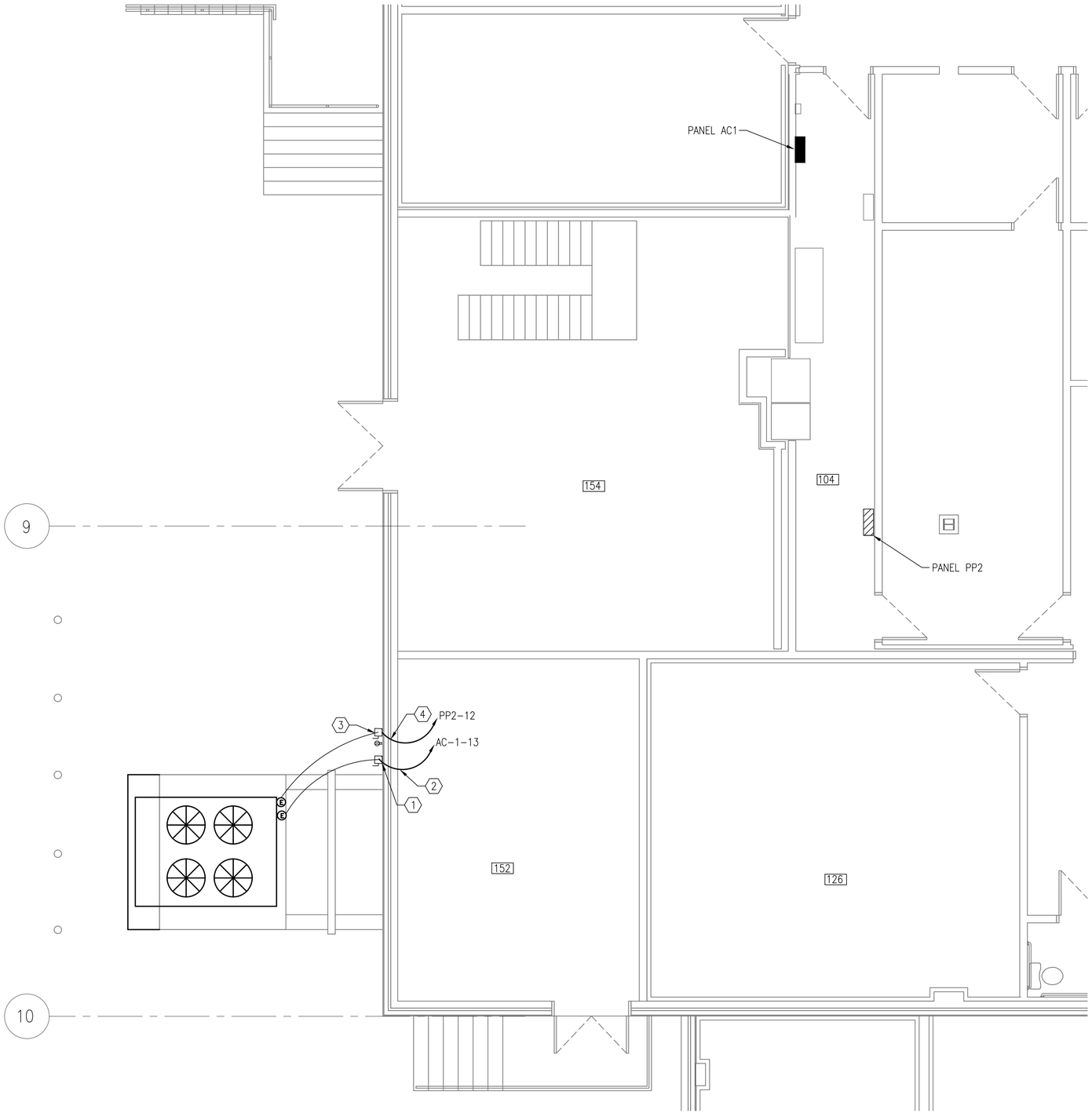

PARTIAL ELECTRICAL FLOOR PLAN

SCALE: 1/4" = 1'-0"

PLAN NORTH

GENERAL SHEET NOTES

1. REFER TO SHEET E-001 FOR LEGEND, ABBREVIATIONS AND GENERAL NOTES.

NEW WORK KEYNOTES

1. PROVIDE A 400A, 600V, 3P, FUSED, NEMA 3R DISCONNECT SWITCH. FUSES RATED AT 125A. PROVIDE 3-#1/0 & 1-#6 IN 1-1/2" LFMC.
2. PROVIDE 3-#1/0 &1-#6 IN 1-1/2" EMT.
3. PROVIDE 30A, 240V, 2P, NON-FUSED, NEMA 3R, DISCONNECT SWITCH. PROVIDE 2-#10 & 1-#10 GND IN 3/4" LFMC.
4. PROVIDE 2-#10 & 1-#10 IN 3/4" EMT.

KEYPLAN

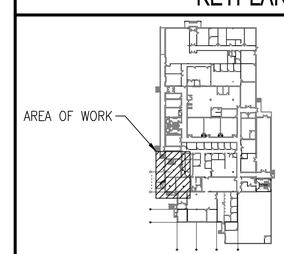

PLAN NORTH

GRAPHIC SCALE

1/4"=1'-0" 0' 2' 4' 8'

MARK	DESCRIPTION	DATE

SEAL

A/E INFO

APPROVED

FOR COMMANDER NAVFAC 20-0-20

ACTIVITY: USTRANSCOM

SATISFACTORY TO DATE 07/30/24

DES DNB | DRW DNB | CHK JMG

PM/DM DS/RSK

BRANCH MANAGER J.MORTON,P.E.

CHIEF ENG/ARCH J.C. MILLER, P.E.

FIRE PROTECTION N/A

DEPARTMENT OF THE NAVY
NAVAL FACILITIES ENGINEERING COMMAND
PWD NORFOLK
NAVAL STATION

NAVAL FACILITIES ENGINEERING SYSTEMS COMMAND
NAVFAC ~ MID-ATLANTIC
NAVAL STATION – NORFOLK, VIRGINIA

BLDG. SP-312 REPLACE CHILLER

NORFOLK, VIRGINIA

PARTIAL ELECTRICAL FLOOR PLAN

SCALE: AS NOTED

EPROJECT NO.: 1624308

CONSTR. CONTR. NO. N/A

NAVFAC DRAWING NO. 12,911,903

SHEET 10 OF 11

EP101

DRAWFORM REVISION: 14 SEP 2023

PANEL AC-1 SCHEDULE

600 AMP BUS 600A MCB 480/277 WYE VOLTS 3PH. 4W. SN, 60HZ MIN. 25KAIC SURFACE MOUNTED

LOAD SERVED	LOAD A	LOAD B	LOAD C	BKR TRIP	WIRE SIZE	CKT NO.	CKT NO.	WIRE SIZE	BKR TRIP	LOAD A	LOAD B	LOAD C	LOAD SERVED
EXHAUST FAN (MECH RM) .5HP	1			15	12	1	2	12	15	4			AIR COMPRESSOR (MECH RM) 2.5 HP
		1					4				4		
			1				6					4	
EXHAUST FAN (BATHROOM) 1HP	3			30	12	3	8	10	30	11			COLD WTR PUMP (CWP-1) 7.5 HP
		3					10				11		
			3				12					11	
COLD WATER PUMP (CWR-1) 7.5HP	11			30	10	5	14		35	0			SPARE
		11					16				0		
			11				18					0	
AC ON ROOF (OAU-1)	41			80	6	7	20		35	0			SPARE
		41					22				0		
			41				24					0	
HOT WTR PUMP (HWP-1) 3HP	5			20	12	9	26	4	70	54			PANEL L VIA 45KVA XFMR
		5					28				54		
			5				30					54	
HOT WTR PUMP (HWP-2) 3HP	5			20	12	11	32						SPACE
		5					34						
			5				36						
(1) CHILLER (C-1)	101			150	1/0	13	38	4	225	125			AC-2
		101					40				125		
			101				42					125	
SIEMAN'S TYPE S3 PANEL FEED PANEL MDP. CKT 10	167	167	167							194	194	194	

TOTAL CONNECTED LOAD (AMPS)
A= 361
B= 361
C= 361

GENERAL SHEET NOTES

1. REFER TO SHEET E-001 FOR GENERAL NOTES.
2. PANEL AC-1 IS A SIEMENS TYPE S3, 600A, 480/277V, 3PH. 4W, 42 CCT PANELBOARD.
3. PANEL AC-1 IS POWERED FROM PANEL MDP, CKT 10.
4. PANEL SCHEDULE IS SHOWN FOR REFERENCE PURPOSES ONLY.

KEYNOTES

1. PROVIDE A 3P, 150A CIRCUIT BREAKER.
2. PROVIDE A NEW TYPED PANEL SCHEDULE.

MARK	DESCRIPTION	DATE

NAVFAC

SEAL

A/E INFO

APPROVED
FOR COMMANDER NAVFAC 2024-7-30

ACTIVITY
USTRANSCOM

SATISFACTORY TO DATE 07/30/24

DES DNB DRW DNB CHK JMG
PM/DM DS/RSK
BRANCH MANAGER J. MORTON, P.E.
CHIEF ENG/ARCH J.C. MILLER, P.E.
FIRE PROTECTION N/A

DEPARTMENT OF THE NAVY
NAVAL FACILITIES ENGINEERING SYSTEMS COMMAND
NAVAL FACILITIES ENGINEERING SYSTEMS COMMAND ~ MID-ATLANTIC
NAVAL STATION - NORFOLK, VIRGINIA
PWD NORFOLK

NAVAL STATION
NORFOLK, VIRGINIA

BLDG. SP-312 REPLACE CHILLER

PANELBOARD SCHEDULE

SCALE: AS NOTED
EPROJECT NO.: 1624308
CONSTR. CONTR. NO. N/A
NAVFAC DRAWING NO. 12,911,904
SHEET 11 OF 11

EP701

DRAWFORM REVISION: 14 SEP 2023