TELECOMMUNICATIONS LEGEND

SYMBOL	DESCRIPTION
E	ELEVATOR PHONE OUTLET - PROVIDE ONE CAT6 PLENUM WHITE VOICE DROP COMPLETE WITH CABLE, CONNECTOR, PATCH CORDS AND TERMINATION AS REQUIRED. ROUTE ONE 1" CONDUIT FROM ELEVATOR EQUIPMENT BOX TO CABLE TRAY ON THE SAME FLOOR AS SHOWN UNLESS NOTED OTHERWISE. COORDINATE EXACT LOCATION WITH ELEVATOR VENDOR.
W	WALL PHONE OUTLET - PROVIDE ONE CAT6 PLENUM WHITE DROP COMPLETE WITH CABLE, CONNECTOR, PATCH CORDS, AND TERMINATION AS REQUIRED. STUB ONE 1" CONDUIT FROM DOUBLE GANG BOX WITH SINGLE GANG PLASTER RING TO CABLE TRAY ON THE SAME FLOOR AS SHOWN. MOUNT AT 54" AFF UNLESS NOTED OTHERWISE.
	WALL STANDARD COMMUNICATION OUTLET - PROVIDE TWO CAT6 PLENUM DATA AND ONE CAT6 PLENUM VOICE DROP COMPLETE WITH CABLES, CONNECTORS, PATCH CORDS, AND TERMINATIONS AS REQUIRED. STUB ONE 1" CONDUIT FROM DOUBLE GANG BOX WITH SINGLE GANG PLASTER RING TO CABLE TRAY ON THE SAME FLOOR AS SHOWN. MOUNT AT PROJECT'S STANDARD RECEPTACLE HEIGHT UNLESS NOTED OTHERWISE. (DATA#1 BLUE, DATA#2 GREEN, VOICE #1 WHITE)
	FLOOR STANDARD COMMUNICATION OUTLET - PROVIDE TWO CAT6 PLENUM DATA AND ONE CAT6 PLENUM VOICE DROPS COMPLETE WITH CABLES, CONNECTORS, PATCH CORDS, AND TERMINATIONS AS REQUIRED. STUB ONE 1" CONDUIT TO CABLE TRAY ON THE SAME FLOOR AS SHOWN UNLESS NOTED OTHERWISE. MOUNT IN FLOOR BOX. EXACT LOCATION TO BE COORDINATED BY ARCHITECT. (DATA#1 BLUE, DATA#2 GREEN, VOICE#1 WHITE)
AP	CEILING STANDARD WIRELESS ACCESS POINT OUTLET - PROVIDE TWO CAT6 PLENUM DATA DROPS COMPLETE WITH CABLES, CONNECTORS, PATCH CORDS, AND TERMINATIONS AS REQUIRED. STUB ONE 1" CONDUIT TO CABLE TRAY ON THE SAME FLOOR AS SHOWN UNLESS NOTED OTHERWISE. MOUNT BACK BOX 12-INCHES ABOVE ACCESSIBLE CEILING. (DATA#1 BLUE, DATA#2 GREEN)
XD/V	DATA/VOICE COMMUNICATION OUTLET - PROVIDE QUANTITY OF CAT6 PLENUM DROPS AS INDICATED BY SUBSCRIPT COMPLETE WITH CABLES, CONNECTORS, PATCH CORDS, AND TERMINATIONS AS REQUIRED. STUB ONE 1" CONDUIT FROM DOUBLE GANG BOX WITH SINGLE GANG PLASTER RING TO CABLE TRAY ON THE SAME FLOOR AS SHOWN UNLESS NOTED OTHERWISE. MOUNT AT 18" AFF UNLESS NOTED OTHERWISE.
XD/V	DATA/VOICE COMMUNICATION OUTLET - PROVIDE QUANTITY OF CAT6 PLENUM DROPS AS INDICATED BY SUBSCRIPT COMPLETE WITH CABLES, CONNECTORS, PATCH CORDS, AND TERMINATIONS AS REQUIRED. STUB ONE 1" CONDUIT TO CABLE TRAY ON THE SAME FLOOR AS SHOWN UNLESS NOTED OTHERWISE. MOUNT IN FLOOR BOX. EXACT LOCATION TO BE COORDINATED BY ARCHITECT.
FP	DATA/CATV COMMUNICATION OUTLET - PROVIDE ONE CATV DROP COMPLETE WITH CABLES, CONNECTORS AND TERMINATIONS AS REQUIRED. MOUNTED IN FLAT PANEL IN-WALL BACKBOX. SEE EAV DRAWINGS FOR INFORMATION OF THE FLAT PANEL IN-WALL BACKBOX. STUB ONE 1" CONDUIT TO CABLE TRAY ON THE SAME FLOOR AS SHOWN UNLESS NOTED OTHERWISE.
X	COMMUNICATIONS DATA OUTLET - "X" DENOTES FUNCTION
	C — CLASSIFIED COMMUNICATION OUTLET - PROVIDE TWO CAT6 PLENUM RED DATA DROPS COMPLETE WITH FIBER, CONNECTORS, PATCH CORDS AND TERMINATIONS AS REQUIRED. STUB ONE 1" CONDUIT FROM DOUBLE GANG BOX WITH SINGLE GANG PLASTER RING TO THE DEDICATED COMMUNICATION CABLE TRAY. MOUNT AT 48" A.F.F. SECURE NETWORK OUTLET UNLESS NOTED OTHERWISE.
	6 — SIX DATA OUTLET CONFIGURATION - PROVIDE SIX CAT6 PLENUM DATA OUTLETS WITHIN A FLUSH MOUNTED WALL PLATE. STUB ONE 1.25" CONDUIT FROM DOUBLE GANG BACKBOX WITH SINGLE GANG PLASTER RING TO THE DEDICATED COMMUNICATION CABLE TRAY. MOUNT AT 18" A.F.F. (DATA# 1, 3, 5 - BLUE AND DATA# 2, 4, 6 - GREEN). INCLUDE CONNECTORS, PATCH CORDS AND TERMINATIONS.
	M — SINGLE CAT6 PLENUM DATA CABLE FOR METER. PROVIDE HOME RUN 1" CONDUIT TO DOUBLE GANG BACKBOX.
TV	TELEVISION WALL OUTLET - PROVIDE ONE RG11 COAX CABLE, CONNECTOR AND TERMINATION AS REQUIRED. ROUTE ONE 1" CONDUIT FROM 2-GANG BACK BOX TO THE DEDICATED COMMUNICATIONS CABLE TRAY AS SHOWN UNLESS NOTED OTHERWISE. COORDINATE TERMINATION OF CABLE WITHIN THE TELECOM ROOM WITH VENDOR. MOUNT BACKBOX AT 72" A.F.F.
P	DATA IN POP UP AT DESK. PROVIDE 2 CAT6 PLENUM DROPS COMPLETE WITH CABLES, CONNECTORS, PATCH CORDS AND TERMINATIONS AS REQUIRED. COORDINATE WITH THE ARCHITECT BEFORE INSTALLATION. (DATA#1 BLUE, DATA#2 GREEN)
F	SYSTEM FURNITURE STANDARD COMMUNICATION OUTLET - PROVIDE TWO CAT6 PLENUM DATA AND ONE CAT6 PLENUM VOICE DROP COMPLETE WITH CABLES, AND 1 BLANK INSERT IN A FOUR PORT FACEPLATE, CONNECTORS, PATCH CORDS AND TERMINATIONS AS REQUIRED. COORDINATE WITH THE ARCHITECT AND FURNITURE CONSULTANT FOR MOUNTING HEIGHT. (DATA#1 BLUE, DATA#2 GREEN, VOICE#1 WHITE)
CAM	WALL CAMERA COMMUNICATION OUTLET - PROVIDE ONE CAT6 PLENUM (BLUE) DATA DROP COMPLETE WITH CABLE, CONNECTORS, PATCH CORDS AND TERMINATIONS AS REQUIRED. STUB ONE 1" CONDUIT FROM DOUBLE GANG BOX WITH SINGLE GANG PLASTER RING TO CABLE TRAY ON THE SAME FLOOR AS SHOWN UNLESS NOTED OTHERWISE. COORDINATE WITH ARCHITECT AND SECURITY CONSULTANT FOR MOUNTING HEIGHT.
CAM	CEILING CAMERA COMMUNICATION OUTLET - PROVIDE ONE CAT6 PLENUM (BLUE) DATA DROP COMPLETE WITH CABLE, CONNECTOR, PATCH CORDS AND TERMINATION AS REQUIRED. STUB ONE 1" CONDUIT FROM DOUBLE GANG BOX WITH SINGLE GANG PLASTER RING TO CABLE TRAY ON THE SAME FLOOR AS SHOWN UNLESS NOTED OTHERWISE. COORDINATE WITH ARCHITECT AND SECURITY CONSULTANT FOR EXACT LOCATION.
RW	DATA COMMUNICATION OUTLET ON RACEWAY- PROVIDE FOUR DATA DROPS COMPLETE WITH CABLES, CONNECTORS AND TERMINATIONS AS REQUIRED. COORDINATE WITH THE ARCHITECT BEFORE INSTALLATION. SEE ELECTRICAL DRAWINGS FOR RACEWAY SPECIFICATIONS.
11	4"x4"x4" JUNCTION BOX. PROVIDE ONE 1.5" CONDUIT TO CABLE TRAY ON THE SAME FLOOR AS SHOWN UNLESS NOTED OTHERWISE. MOUNT AT PROJECT'S STANDARD RECEPTACLE HEIGHT UNLESS NOTED OTHERWISE.
12	6"x6"x4" JUNCTION BOX. PROVIDE ONE 2" CONDUIT TO CABLE TRAY ON THE SAME FLOOR AS SHOWN UNLESS NOTED OTHERWISE. MOUNT AT PROJECT'S STANDARD RECEPTACLE HEIGHT UNLESS NOTED OTHERWISE.
S#*	PUBLIC ADDRESS SPEAKER
PA	CONTROL STATION - PUSH TO TALK
	PUBLIC ADDRESS ZONES
S#*	PAGING HORN
	19" TELECOMMUNICATIONS RACK.
	TELECOMMUNICATIONS GROUND BUS BAR.
	FIRE RETARDANT .75" PLYWOOD BACKBOARD. PAINTED WHITE OR ANOTHER LIGHT COLOR. 4' WIDE X 8' HIGH.
	TELECOMMUNICATIONS BASKET CABLE TRAY, 12" WIDE x 4" DEEP, UNO. MOUNT ABOVE ACCESSIBLE CEILING. COORDINATE LOCATION WITH DUCTWORK, PLUMBING, FIRE PROTECTION, ELECTRICAL, AND LIGHT FIXTURES.
	TELECOMMUNICATIONS LADDER CABLE RUNWAY. SIZE AS INDICATED ON DRAWINGS.
	CONDUIT CONCEALED IN SLAB OR UNDER FINISHED FLOOR. ROUTE AS INDICATED.
	CONDUIT CONCEALED IN WALL OR ABOVE FINISHED CEILING. ROUTE AS INDICATED.
	CONDUIT STUB UP INTO ACCESSIBLE CEILING UNLESS NOTED OTHERWISE
	CONDUIT ABOVE CEILING UNLESS NOTED OTHERWISE. CONDUIT MUST BE CONCEALED.

ABBREVIATIONS

AFF	ABOVE FINISHED FLOOR
BFG	BELOW FINISHED GRADE
CR	CARD READER
C	CONDUIT
EA	EACH
EC	ELECTRICAL CONTRACTOR
ER	EQUIPMENT ROOM
EX	EXISTING
FOC	FIBER OPTIC CABLES
GFCI	GOVERNMENT FURNISHED, CONTRACTOR INSTALLED
GFGI	GOVERNMENT FURNISHED, GOVERNMENT INSTALLED
IDS	INTRUSION DETECTION SYSTEM
MS	MOTION SENSOR
NGEN	NEXT GENERATION ENTERPRISE NETWORK
NMCI	NAVY MARINE CORPS INTRANET
NIPR	NON-SECURE INTERNET PROTOCOL ROUTER
PBB	PRIMARY BONDING BUSBAR
QU	QUANTITY
REQ'D	REQUIRED
RBB	RACK BONDING BUSBAR
RM	ROOM
SBB	SECONDARY BONDING BUSBAR
SIPR	SECURE INTERNET PROTOCOL ROUTER
SHT	SHEET
SM	SINGLE MODE
TR	TELECOMMUNICATION ROOM
TGB	TELECOMMUNICATION GROUNDING BUSBAR
THH	TELECOMMUNICATION HAND HOLE
TMH	TELECOMMUNICATION MAINTENANCE HOLE
TMGB	TELECOMMUNICATION MAIN GROUNDING BUSBAR
TBB	TELECOMMUNICATION BONDING BACKBONE
UNO	UNLESS NOTED OTHERWISE

SEPARATION DISTANCES BETWEEN DATA CABLES AND SPECIFIC EMI SOURCES

SOURCE OF DISTURBANCE	MINIMUM SEPARATION DISTANCE
FLUORESCENT LAMPS	6"
NEON LAMPS	6"
MERCURY VAPOUR LAMPS	6"
HIGH-INTENSITY DISCHARGE LAMPS	6"
ARC WELDERS	6"
FREQUENCY INDUCTION HEATING	40"

50' DISTANCE LIMIT RULE

A. IN NO CASE MUST A NON-LISTED OUTSIDE PLANT OR INCOMING SERVICE OUTDOOR RATED CABLE EXCEED 50 FEET FROM THE POINT OF ENTRANCE INTO ANY BUILDING. IF ON-SITE CONDITIONS RESULT IN A CASE WHERE THE CABLE EXCEEDS THE DISTANCE LIMIT THE CONTRACTOR MUST ADVISE A SOLUTION WITH THE PROJECT CONSULTANT. IN ALL CASES THE SOLUTION WOULD NEED TO INVOLVE EITHER TRANSITIONING FROM OUTDOOR NON-LISTED TO INDOOR LISTED CABLE VIA A SPLICE POINT (E.G. SPLICE CASE OR SPLICE ENCLOSURE FOR FIBIER, PROTECTOR BLOCK FOR COPPER ETC.) OR THE ALTERNATIVE MUST BE TO ENCLOSE THE OUTDOOR RATED CABLE WITHIN INTERMEDIATE METAL CONDUIT (IMC) OR RIGID METAL CONDUIT (RMC) THAT IS PROPERLY SEALED AND BONDED TO A GROUNDING ELECTRODE. RETAINING THE OUTDOOR CABLE WITHIN CONDUIT MUST EFFECTIVELY EXTEND THE POINT OF ENTRANCE INTO THE BUILDING.

OSP DETECTION TAPE INCLUSION

A. IN ORDER TO REDUCE THE CHANCE OF ACCIDENTAL DIG-UP OF OUTSIDE PLANT DUCTBANK ELEMENTS IN THE FUTURE, PROVIDE A DETECTABLE WARNING TAPE CONTAINING METALLIC TRACINGS ALONG THE DUCTBANK PATH AT 12" BELOW GRADE MINIMUM. COLOR OF THE DETECTABLE TAPE MUST BE ORANGE OR WHICHEVER COLOR THE COMMON GROUND ALLIANCE (CGA) HAS CURRENTLY DETERMINED FOR TELEVISION AND COMMUNITY ANTENNA TELEVISION (CATV) CABLES.

GENERAL NOTES

CONDUIT INSTALLATION NOTES
ASSOCIATED WITH DIVISION 26

THE RACEWAY SYSTEM FOR TELECOM CABLE MUST FOLLOW THE NEC AND ALL LOCAL CODES GOVERNING THIS PROJECT. ADDITIONAL REQUIREMENTS ARE AS FOLLOWS:

1. A PULL CORD (NYLON, 1/8" MINIMUM) MUST BE INSTALLED WITHIN ALL CONDUITS.
2. CONDUIT MUST RUN IN MOST DIRECT ROUTE POSSIBLE, USUALLY PARALLEL WITH BUILDING LINES.
3. CONDUIT SLEEVES MUST BE RIGID GALVANIZED STEEL FOR PENETRATIONS OF CONCRETE SLABS, CONCRETE WALLS. ALL SLEEVES MUST BE RIGIDLY INSTALLED USING APPROPRIATE FITTINGS AND ALL PENETRATIONS MUST BE GROUTED AROUND THE SLEEVE. SLEEVES MUST PROJECT A MINIMUM OF 4" BEYOND WALL OR FLOOR SURFACE. ALL PENETRATIONS MUST BE FIRESTOPPED.
4. CONDUIT RUN MUST CONTAIN NO CONTINUOUS SECTIONS LONGER THAN 100 FEET. IF RUNS TOTAL MORE THAN 100 FEET, PULL POINTS OR PULL BOXES MUST BE INSERTED.
5. CONDUIT RUNS TO WORK AREAS MUST SERVE NO MORE THAN ONE COMMUNICATION OUTLET. DAISY CHAINING IS NEVER ALLOWED.
6. CONDUIT MUST HAVE NO MORE THAN TWO 90 DEGREES OF BENDS AT ANY POINT OR MORE THAN 180 DEGREES OF CUMULATIVE BENDS BETWEEN PULL POINTS.
7. INSTALL CONDUITS WITH A MINIMUM OF BENDS AND OFFSETS. BENDS MUST NOT KINK OR DESTROY INTERIOR CROSS SECTION OF RACEWAY. FACTORY MADE BENDS MUST BE USED FOR RACEWAYS 1" TRADE SIZE AND LARGER. BENDS RADIUS MUST BE 6 TIMES INTERNAL DIAMETER FOR CONDUIT SIZES UP TO 2". A CONDUIT GREATER THAN 2" MUST HAVE BEND RADIUS AT LEAST 10 TIMES DIAMETER OF CONDUIT. DO NOT USE PULL BOX IN LIEU OF A BEND RADIUS. BEND RADIUS ON CABLING MUST ALWAYS BE MADE WITHIN THE CONDUIT.
8. DO NOT INSTALL CONDUIT OVER OR ADJACENT TO BOILERS, INCINERATORS, HOT WATER LINES, OR STEAM LINES.
9. REAM ALL CONDUIT ENDS AND FIT THEM WITH AN INSULATED BUSHING TO ELIMINATE SHARP EDGES THAT MAY DAMAGE CABLES.
10. AFTER INSTALLATION, LEAVE CONDUITS CLEAN, DRY AND UNOBSTRUCTED, REAMED AND FITTED WITH BUSHINGS.
11. ELECTRICAL METALLIC TUBING AND RIGID METAL CONDUIT ARE THE ONLY ALLOWED TYPES FOR INTERIOR BUILDING. FLEXIBLE METAL CONDUIT IS NEVER ALLOWED.
12. CONDUIT SYSTEM INSTALLATION:
    - 12.1. CABLE IN EXTERIOR, ABOVE GRADE LOCATIONS: RIGID GALVANIZED STEEL.
    - 12.2. INTERIOR LOCATIONS: EMT.
    - 12.3. CABLE BELOW GRADE: SCHEDULE 40 PVC.
13. ALL METALLIC CONDUITS MUST BE APPROPRIATELY GROUNDED AS SPECIFIED IN THE NEC, ANSI/TIA/EIA J-STD-607-B AND PER MANUFACTURER'S SPECIFICATIONS.
14. CONDUITS ARE TO BE CLEARLY MARKED AT EACH END TO INDICATE THE TRADE (E.G. AV, TELECOM) THAT THE CONDUIT IS INTENDED TO SUPPORT.
15. CABLE PATHWAY MUST NOT EXCEED 295 FEET. THE LENGTH MUST BE MEASURED FROM THE OUTLET IN THE WORK AREA TO PATCH PANEL IN THE RACK.
16. FOR OUTSIDE PLANT CONDUITS ROUTES PROVIDE A SITE LEVEL ACCESSIBLE HANDHOLE EVERY (2) 90 DEGREE BENDS OR 180 DEGREES IN BENDS TOTAL. DISTANCE BETWEEN EACH HANDHOLE MUST NOT EXCEED 600 FEET DISTANCE. DO NOT USE HANDHOLE IN LIEU OF A BEND RADIUS. BEND RADIUS ON CABLING MUST ALWAYS BE MADE WITHIN THE CONDUIT.
17. OUTSIDE PLANT LOCATIONS, ROUTES, AND PULL POINTS ARE INDICATIVE ONLY. CONTRACTOR TO REVIEW THE PROJECT SITE AND SUBMIT SHOP DRAWING FOR REVIEW BEFORE COMMENCING WORK.

GENERAL PROJECT NOTES

A. ALL MOUNTING HEIGHTS ARE TO THE CENTER LINE OF THE DEVICE BACKBOX UNLESS NOTED OTHERWISE.
B. ALL BOXES AND CONDUITS IN WALLS AND CEILINGS MUST BE FLUSH MOUNTED OR CONCEALED UNLESS NOTED OTHERWISE.
C. ALL EXTERIOR OUTLETS MUST BE WEATHERPROOF.
D. EXACT LOCATION OF ALL TELECOM OUTLETS LOCATED IN FURNITURE AND MILLWORK TO BE VERIFIED WITH ARCHITECT PRIOR TO INSTALLATION.
E. ELECTRICAL OUTLETS MUST BE PROVIDED WITHIN THREE FEET OF COMMUNICATION OUTLETS AT EQUAL HEIGHT.

SEPARATION DISTANCES BETWEEN POWER AND DATA CABLES

CONDITION	MINIMUM SEPARATION DISTANCE		
	< 2kVA	2-5 kVA	> 5kVA
UNSHIELDED POWER LINES OR ELECTRICAL EQUIPMENT IN PROXIMITY TO OPEN OR NONMETAL PATHWAYS.	5"	12"	24"
UNSHIELDED POWER LINES OR ELECTRICAL EQUIPMENT IN PROXIMITY TO A GROUNDED METAL CONDUIT PATHWAY.	2.5"	6"	12"
POWER LINES ENCLOSED IN A GROUNDED METAL CONDUIT (OR EQUIVALENT SHIELDING) IN PROXIMITY TO A GROUNDED METAL CONDUIT PATHWAY.		3"	6"
ELECTRICAL MOTORS AND TRANSFORMERS.			48"

SYM	DESCRIPTION	DATE	APPR

NAVFAC

REGISTERED COMMUNICATIONS DISTRIBUTION DESIGNER
6/23/2025
Bicsi
Rene Rubio
BICSI ID #112613
EXPIRES 12-31-26
RCDD
SEAL

Jacobs
1100 NORTH GLEBE ROAD
SUITE 500
ARLINGTON, VIRGINIA 22201
571.218.1000
FAX: 571.218.1600

AE INFO

APPROVED
FOR COMMANDER NAVFAC
ACTIVITY
APPROVED BY LCDR ELIZABETH OLOKODE NAVFAC NLON FEAD DIRECTOR NEW LONDON, GROTON, CT
SATISFACTORY TO DATE 05/27/2025

DES	RR	DRW RR	CHK SA
PM/DM			SDS / RSF
BRANCH MANAGER			WRB
CHIEF ENG/ARCH			JWJ
FIRE PROTECTION			HPN

DEPARTMENT OF THE NAVY
NAVAL FACILITIES ENGINEERING SYSTEMS COMMAND - MID-ATLANTIC
NAVAL FACILITIES ENGINEERING SYSTEMS COMMAND - MID-ATLANTIC
NAVAL STATION - NORFOLK, VA
NAVAL SUBMARINE BASE NEW LONDON
GROTON, CONNECTICUT
P-1102 WEAPONS MAGAZINE & ORDNANCE OPERATIONS FACILITY
OPERATIONS
TELECOMMUNICATIONS SYMBOLS, LEGEND, ABBREVIATIONS, AND NOTES

SCALE: AS NOTED
EPROJECT NO.: 1667770
CONSTR. CONTR. NO.
NAVFAC DRAWING NO. 12894055
SHEET 105 OF 140
T-001

6/20/2025 1:09:12 PM T-001
\\dc1vs01\edp\PDZE\6280\TELE\BLDG-1667770-T-BIM_v21.rvt

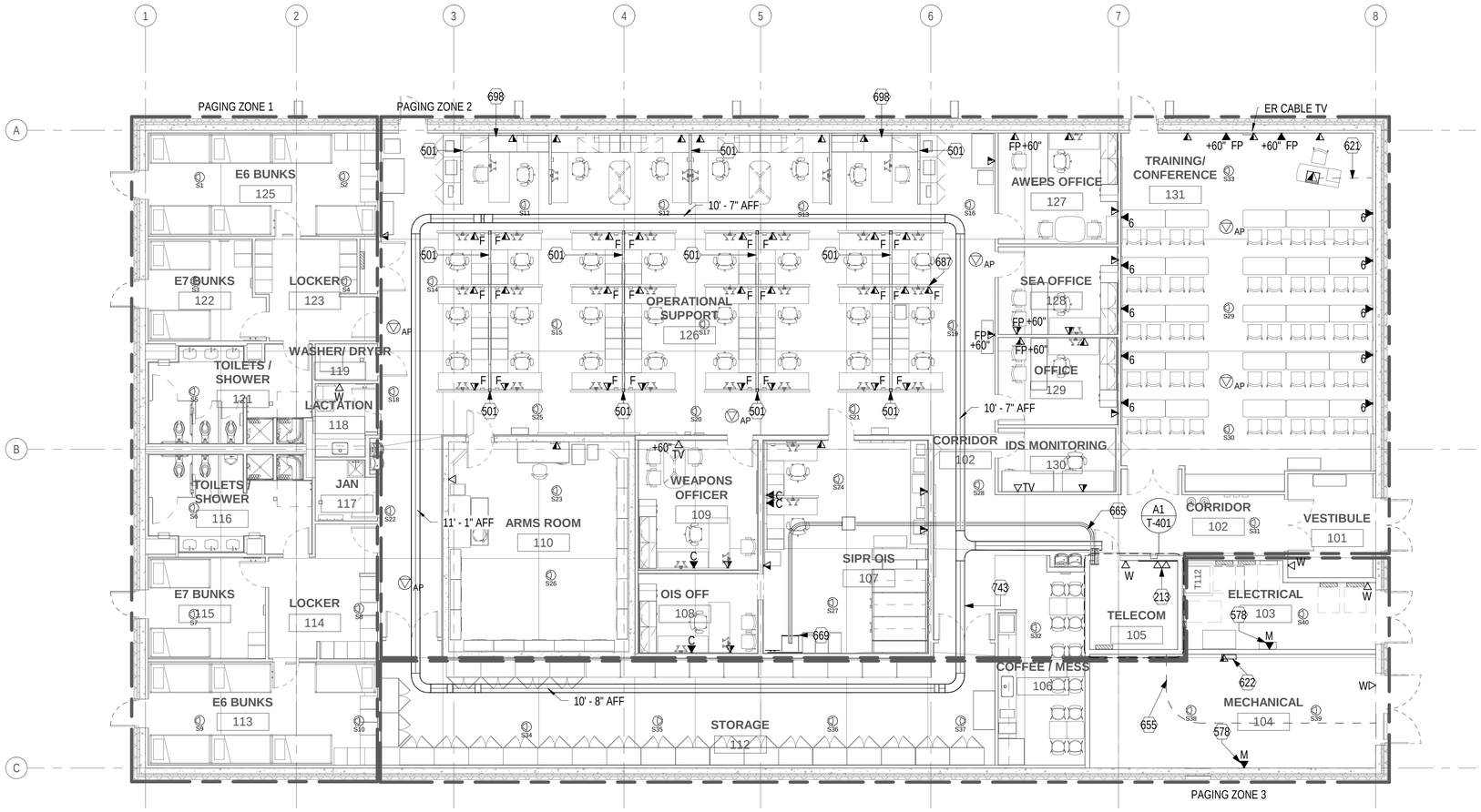

B1 TELECOMMUNICATIONS FLOOR PLAN

1/8" = 1'-0"

GENERAL SHEET NOTES

A REFER TO SHEET T-001 FOR TELECOM SYMBOLS AND ABBREVIATIONS.

B BOND CABLE TRAY SECTIONS TOGETHER AND GROUND THE SYSTEM TO THE PBB/SBB.

C TELECOMMUNICATIONS RACKS AND/OR CABINTS MUST BE BONDED TO THE PBB/SBB

D TELECOMMUNICATIONS CONDUITS MUST BE BONDED TO THE PBB/SBB OR TO THE NEAREST CABLE TRAY OUTSIDE THE TR.

E PROVIDE INFRASTRUCTURE FOR GOVERNMENT FURNISHED GOVERNMENT INSTALLED SECUIRITY INTRUSION DETECTION SYSTEM AND ACCESS CONTROL SYSTEM. PROVIDE JUNCTION BOXES AND CONDUIT WITH PULL STRINGS.

F MAINTAIN SEPARATION BETWEEN ALL CLASSIFIED AND UNCLASSIFED CABLING IN ACCORDANCE WITH CNSSAM TEPMEST/1-13.

SHEET KEYNOTES

213 PROVIDE CATEGORY 6 WALL MOUNTED DATA OUTLETS FOR ESS EQUIPMENT. COORDINATE ROUGH IN HEIGHT WITH ESS PROVIDER.

501 WIREMOLD VISTA POWER POLES BY FF&E. INSTALL DATA WIRING WITHIN A SEPARATE CHANNEL AND TERMINATE WITHIN DEDICATED OUTLET IN FURNITURE PANEL. RE:A1/E-502. TYPICAL.

578 PROVIDE DEDICATED 1 INCH CONDUIT FROM TELECOM ROOM FOR CATEGORY 6 METERING CONNECTION. COORDINATE FINAL PLACEMENT WITH EQUIPMENT PRIOR TO ROUGH IN. INCLUDE PATCH CORDS AS NEEDED.

621 PROVIDE MINIMUM 1" CONDUIT BETWEEN FLOOR BOX UNDER INSTRUCTOR DESK AND NEAREST ACCESSIBLE CEILING FOR COMMUNICATIONS CABLING.

622 PROVIDE 24 PORT PATCH PANEL WITH CATEGORY 6 CABLES TO CABINET 1 IN TELECOM ROOM 105 FOR BAS CONNECTION INTERFACE.

655 ROUTE NEW 2X2 DUCTBANK BETWEEN THE NEW TMH01 AND TELECOM RM 105 IN-GROUND AND BELOW THE OPERATIONS BUILDING (BLDG A) SLAB. REF TS-101

665 PROVIDE 4" CONDUIT FOR CONNECTION BETWEEN SIPR OIS 107 AND TELECOM 105. INCLUDE 18" X 18" X 8" PULL BOX.

669 REFERENCE A3/C3 T-201 FOR ADDITIONAL DETAILS.

687 ADDITIONAL DATA DROP AT WEAPONS OFFICER LOCATION FOR LIGHTENING DETECTION SYSTEM MONITOR.

698 BASE FEED DATA OUTLETS FOR SYSTEMS FURNITURE. TERMINATE DATA CABLING WITHIN PANEL SYSTEM KICK PLATE USING A THE CORRECT SIZE BEZEL. (TYPICAL)

743 PROVIDE 12" WIDE BY 2 INCH DEEP WIRE BASKET TRAY OVERHEAD FOR LOW COMMUNICATIONS CABLING. INSTALL TRAY MIN 12" ABOVE CEILING.

0 4' 8' 16' 24'
1/8" = 1'-0"

PLAN NORTH

SYM	DESCRIPTION	DATE	APPR

NAVFAC

REGISTERED COMMUNICATIONS DISTRIBUTION DESIGNER 6/23/2025 Bicsi Rene Rubio BICSI ID #112613 EXPIRES 12-31-26 RCDD SEAL

Jacobs
1100 NORTH GLEBE ROAD
SUITE 500
ARLINGTON, VIRGINIA 22201
571.218.1000
FAX: 571.218.1600
A/E INFO

APPROVED
FOR COMMANDER NAVFAC
ACTIVITY
APPROVED BY LCDR ELIZABETH OLOKODE NAVFAC NLON FEAD DIRECTOR NEW LONDON, GROTON, CT
SATISFACTORY TO DATE 05/27/2025

DES RR	DRW RR	CHK SA	
PMOM			SDS / RSF
BRANCH MANAGER			WRB
CHIEF ENG/ARCH			JWJ
FIRE PROTECTION			HPN

DEPARTMENT OF THE NAVY
NAVAL FACILITIES ENGINEERING SYSTEMS COMMAND - MID-ATLANTIC
NAVAL FACILITIES ENGINEERING SYSTEMS COMMAND
MID-ATLANTIC
NAVAL STATION - NORFOLK, VA
NAVAL SUBMARINE BASE NEW LONDON
GROTON, CONNECTICUT
P-1102 WEAPONS MAGAZINE & ORDNANCE OPERATIONS FACILITY
OPERATIONS
TELECOMMUNICATIONS FLOOR PLAN

SCALE: AS NOTED
EPROJECT NO.: 1667770
CONSTR. CONTR. NO.
NAVFAC DRAWING NO. 12894056
SHEET 106 OF 140
T-101

6/20/2025 1:09:26 PM T-101
\\dc1vs01\Revit\P\OZE1628\TELE\BLDG-1667770-T-BIM_v21.rvt

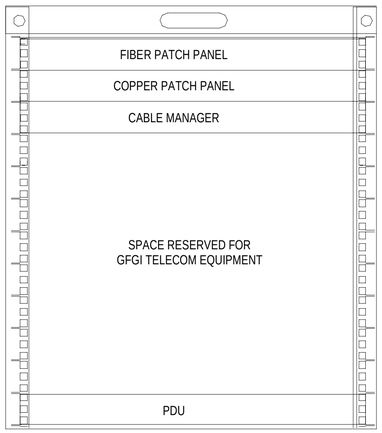

C3 CABINET ELEVATION SIPR OIS ROOM 107
NTS

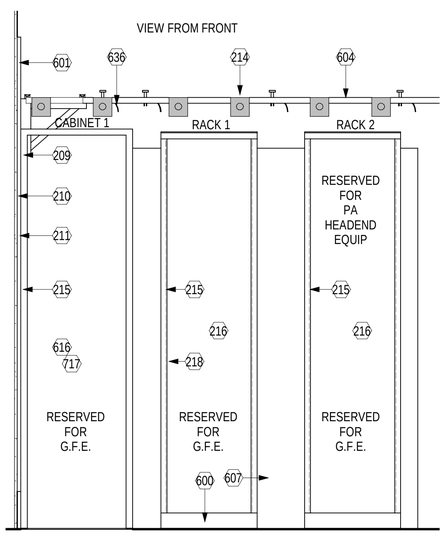

A1 TELECOM CABINET & RACK ELEVATION RM 105
3/4" = 1'-0" (T-401)

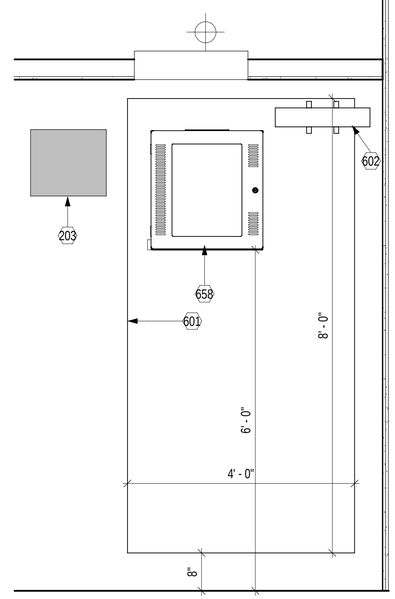

A3 SIPR OIS RM 107 - WALL ELEVATION
3/4" = 1'-0" (T-102)

GENERAL SHEET NOTES

A REFER TO SHEET T-001 FOR TELECOM SYMBOLS AND ABBREVIATIONS.

B BOND CABLE TRAY SECTIONS TOGETHER AND GROUND THE SYSTEM TO THE PBB/SBB.

C TELECOMMUNICATIONS RACKS AND/OR CABINTS MUST BE BONDED TO THE PBB/SBB

D TELECOMMUNICATIONS CONDUITS MUST BE BONDED TO THE PBB/SBB OR TO THE NEAREST CABLE TRAY OUTSIDE THE TR.

E PROVIDE INFRASTRUCTURE FOR GOVERNMENT FURNISHED GOVERNMENT INSTALLED SECUIRITY INTRUSION DETECTION SYSTEM AND ACCESS CONTROL SYSTEM. PROVIDE JUNCTION BOXES AND CONDUIT WITH PULL STRINGS.

F MAINTAIN SEPARATION BETWEEN ALL CLASSIFIED AND UNCLASSIFED CABLING IN ACCORDANCE WITH CNSSAM TEPMEST/1-13.

SHEET KEYNOTES

203 SPACE ALLOCATED FOR PCU (CONTROL POINT FOR DEDICATED ROOM ACCESS CONTROL AND INTRUSION DETECTION PANELS) PROVIDE JUNCTION BOX ON WALL FOR HARD WIRED 110VAC POWER MOUNTED AT 84" AFF.

209 PROVIDE PATCH PANEL FOR OSP FIBER OPTIC CABLE

210 PROVIDE HORIZONTAL CABLE MANAGER ABOVE AND BELOW COPPER PATCH PANELS. (TYPICAL)

211 PROVIDE 48 PORT COPPER PATCH PANEL AS REQUIRED FOR THE NUMBER OF DATA DROPS PLUS 25% SPARE.

214 LOCATION OF POWER OUTLETS SHOWN FOR REFERENCE ONLY. REFER TO ELECTRICAL DRAWINGS FOR ADDITIONAL INFORMATION RECEPTACELS FOR MULTI-OUTLET POWER STRIPS. (TYPICAL)

215 PROVIDE AN RBB WITHIN EACH EQUIPMENT RACK FOR CHASSIS GROUNDING.

216 PROVIDE (2) MULTI-OUTLET POWER STRIPS IN EACH RACK. ONE POWER STRIP MUST BE 120V, 1-PHASE AND THE OTHER MUST BE 208V, 1-PHASE. EACH STRI MUST BE EQUIPPED WITH A TWIST LOCK PLUG

218 APPROXIMATE LOCATION OF NVR. CONFIRM FINAL LOCATION WITH OWNER.

600 PROVIDE TWO-POST EQUIPMENT RACK, 19" WIDE, UNIVERSAL, 84" HIGH, 45RU, BLACK, MARKED AND NUMBERED RACK UNITS, 1500LB LOAD CAPACITY. ANCHOR BASEPLATE ON ALL FOUR CORNERS TO CONCRETE SUBFLOOR. (TYPICAL)

601 PROVIDE AC GRADE FIRE TREATED 3/4" PLYWOOD ON WALLS AS SHOWN MOUNTED VERTICALLY 8" AFF . PAINT PLYWOOD WITH 2 EVEN COATS OF FIRE RETARDANT PAINT ON ALL SIDES. ATTACH USING AN ANCHORING SYSTEM SUITABLE FOR THE WALL TYPE (TYPICAL)

602 GROUND AND BOND EQUIPMENT RACKS AND LADDER PATHWAY TO PBB/SBB. INSTALL GROUND BAR AT HEIGHT INDICATED.

604 PROVIDE 12" WIDE STEEL LADDER RACK WITH FITTINGS. MOUNT LADDER RACK 8' AFF. (TYPICAL)

607 PROVIDE DOUBLE-SIDED VERTICAL CABLE MANAGER PER SPECIFICATIONS. (TYPICAL)

616 FLOOR MOUNTED EQUIPMENT CABINET FOR NIPR NETWORK CABLING ONLY. MAINTAIN 3' MINIMUM CLEARANCE IN FRONT AND REAR OF CABINET. EQUIPPED WITH LOCKABLE FRONT AND REAR DOORS, INDIVIDUALLY KEYED, 84"H X 24"W X 36"D, FRONT AND REAR VERTICAL MOUNTING RAILS, GROUND BUS BAR BONDED TO THE TELECOM GROUNDING SYSTEM.

636 PROVIDE WATERFALL FITTING WHERE CABLING EXITS LADDER RACK TO MAINTAIN PROPER BEND RADIUS. (TYPICAL)

658 PROVIDE WALL-MOUNTED EQUIPMENT ENCLOSURE MOUNTED 6' AFF AS INDICATED. CABLING FOR SIPR DROPS ORIGINATES FROM A DEDICATED 24-PORT PATCH PANEL. PROVIDE TWO CAT6 DATA CABLES BETWEEN THE WALL CABINET AND TELECOM 105. COORDINATE POWER WITH EC.

717 COORDINATE POWER WITH ELECTRICAL - PROVIDE ONE 120VAC L5-20R RECEPTACLE CONNECTED TO A DEDICATED BRANCH CIRCUIT WITH ONE 120VAC RACK MOUNTED POWER STRIP CONNECTED TO L5-20R RECEPTACLE (FOR CRITICAL FACILITIES - PROVIDE TWO L5-20R RECEPTACLES REQUIRED ON SEPARATE BRANCH CIRCUIS WITH TWO POWER STRIPS CONNECTED TO EACH L5-20R RECEPTACLES). UPS IS GFGI.

0 6" 1' 2' 4'
3/4" = 1'-0"

SYM	DESCRIPTION	DATE	APPR

NAVFAC

REGISTERED COMMUNICATIONS DISTRIBUTION DESIGNER
6123/1/BICSI
Bicsi
Rene Rubio
BICSI ID #112613
EXPIRES 12-31-26
RCDD
SEAL

Jacobs
1100 NORTH GLEBE ROAD
SUITE 500
ARLINGTON, VIRGINIA 22201
571.218.1000
FAX: 571.218.1600

A/E INFO

APPROVED
FOR COMMANDER NAVFAC
ACTIVITY
APPROVED BY LCDR ELIZABETH
OLOKODE NAVFAC NLON FEAD
DIRECTOR NEW LONDON, GROTON, CT
SATISFACTORY TO DATE 05/27/2025

DES	RR	DRW	RR
CHK	SA		
PM/DM	SDS / RSF		
BRANCH MANAGER	WRB		
CHIEF ENG/ARCH	JWJ		
FIRE PROTECTION	HPN		

DEPARTMENT OF THE NAVY
NAVAL FACILITIES ENGINEERING SYSTEMS COMMAND
MID-ATLANTIC
NAVAL FACILITIES ENGINEERING SYSTEMS COMMAND - MID-ATLANTIC
NAVAL STATION - NORFOLK, VA
NAVAL SUBMARINE BASE NEW LONDON
GROTON, CONNECTICUT
P-1102 WEAPONS MAGAZINE & ORDNANCE OPERATIONS FACILITY
OPERATIONS
TELECOMMUNICATIONS RACK ELEVATIONS

SCALE: AS NOTED
EPROJECT NO.: 1667770
CONSTR. CONTR. NO.
NAVFAC DRAWING NO.
12894057
SHEET 107 OF 140
T-201

6/20/2025 1:09:36 PM T-201
\\bk21vs01\Revit\PROJECTS\26187\ELE\BLDG-1667770-T-BIM_v21.rvt

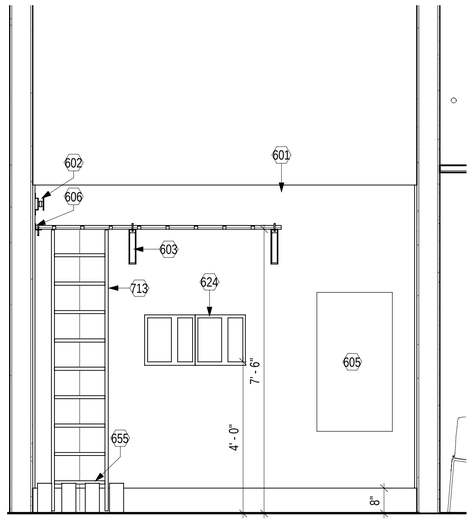

C1 TELECOM 105 - SOUTH ELEVATION

1/2" = 1'-0" (T-102)

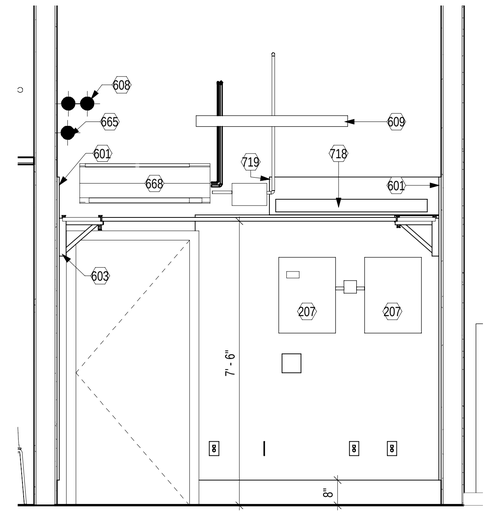

C3 TELECOM 105 - NORTH ELEVATION

1/2" = 1'-0" (T-102)

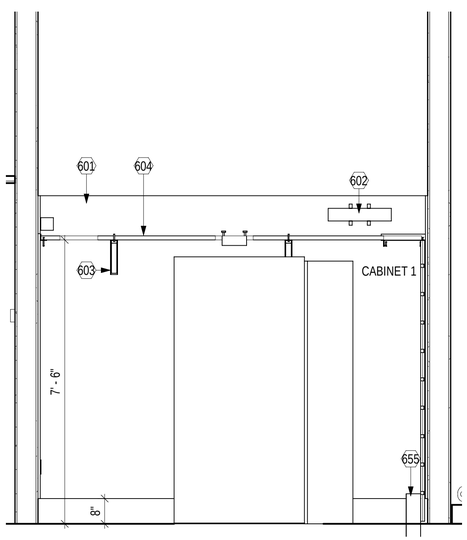

A1 TELECOM 105 EAST ELEVATION

1/2" = 1'-0" (T-102)

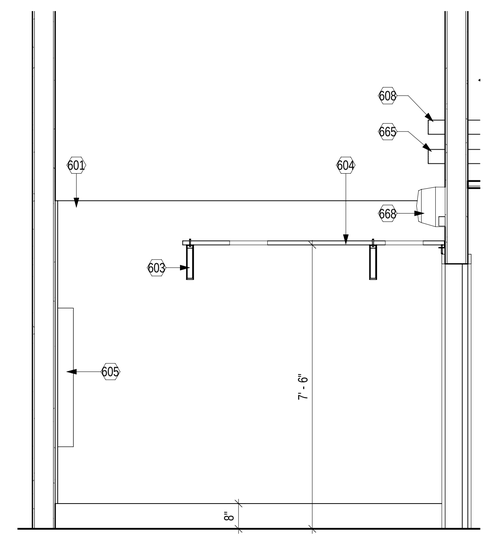

A3 TELECOM 105 - WEST ELEVATION

1/2" = 1'-0" (T-102)

GENERAL SHEET NOTES

A REFER TO SHEET T-001 FOR TELECOM SYMBOLS AND ABBREVIATIONS.

B BOND CABLE TRAY SECTIONS TOGETHER AND GROUND THE SYSTEM TO THE PBB/SBB.

C TELECOMMUNICATIONS RACKS AND/OR CABINTS MUST BE BONDED TO THE PBB/SBB

D TELECOMMUNICATIONS CONDUITS MUST BE BONDED TO THE PBB/SBB OR TO THE NEAREST CABLE TRAY OUTSIDE THE TR.

E PROVIDE INFRASTRUCTURE FOR GOVERNMENT FURNISHED GOVERNMENT INSTALLED SECUIRITY INTRUSION DETECTION SYSTEM AND ACCESS CONTROL SYSTEM. PROVIDE JUNCTION BOXES AND CONDUIT WITH PULL STRINGS.

F MAINTAIN SEPARATION BETWEEN ALL CLASSIFIED AND UNCLASSIFED CABLING IN ACCORDANCE WITH CNSSAM TEPMEST/1-13.

SHEET KEYNOTES

207 WALL SPACE ALLOCATED FOR ACCESS CONTROL PANELS. PROVIDE DEDICATED 110VAC POWER FOR HARDWIRED CIRCUIT MOUNTED AT 72" AFF

601 PROVIDE AC GRADE FIRE TREATED 3/4" PLYWOOD ON WALLS AS SHOWN MOUNTED VERTICALLY 8" AFF . PAINT PLYWOOD WITH 2 EVEN COATS OF FIRE RETARDANT PAINT ON ALL SIDES. ATTACH USING AN ANCHORING SYSTEM SUITABLE FOR THE WALL TYPE (TYPICAL)

602 GROUND AND BOND EQUIPMENT RACKS AND LADDER PATHWAY TO PBB/SBB. INSTALL GROUND BAR AT HEIGHT INDICATED.

603 TRI-ANGULAR SUPPORT FOR LADDER RACK SHALL BE SPACED AT 5' ON CENTER. (TYPICAL)

604 PROVIDE 12" WIDE STEEL LADDER RACK WITH FITTINGS. MOUNT LADDER RACK 8' AFF. (TYPICAL)

605 APPROXIMATE LOCATION OF ELECTRICAL PANEL BOARD. MAINTAIN OPERATIONAL CLEARANCES PER NEC.

606 PROVIDE WALL ANGLE SUPPORT BRACKET FITTING USING WALL ANCHORS SUITABLE FOR WALL TYPE. (TYPICAL)

608 PROVIDE FOUR INCH FIRE RATED SLEEVE SYSTEM FOR COMMUNICATIONS CABLING CAPABLE OF 100 PERCENT FILL.(TYPICAL)

609 MAINTAIN 12" CLEARANCE BETWEEN LIGHTING FIXTURES AND COMMUNICATIONS CABLE. INCLUDE SPILL OUT FITTING TO CONTROL CABLE BEND RADIUS.

624 PROVIDE WALL MOUNTED PRIMARY ENTRANCE PROTECTION OF INCOMING/OUTGOING COPPER FEEDER CABLES.

655 ROUTE NEW 2X2 DUCTBANK BETWEEN THE NEW TMH01 AND TELECOM RM 105 IN-GROUND AND BELOW THE OPERATIONS BUILDING (BLDG A) SLAB. REF TS-101

665 PROVIDE 4" CONDUIT FOR CONNECTION BETWEEN SIPR OIS 107 AND TELECOM 105. INCLUDE 18" X 18" X 8" PULL BOX.

668 MECHANICAL EQUIPMENT - AC UNIT SHOWN FOR REFERENCE AND COORDINATION.

713 PROVIDE 18"W VERTICAL STEEL LADDER RACK WITH FOOT KIT, WALL BRACKETS, AND FITTINGS TO PROVIDE SECURE PATHWAY BETWEEN ENTRY CONDUITS AND OVERHEAD LADDER.

718 CONSOLIDATE SECURITY CONDUIT INTO METALLIC TROUGH WITH COVER 4" X 4" X 4'.

719 NOTCH PLYWOOD AROUND MECHANICAL EQUIPMENT.

0 1' 2' 4' 6'

1/2" = 1'-0"

SYM	DESCRIPTION	DATE	APPR

NAVFAC

REGISTERED COMMUNICATIONS DISTRIBUTION DESIGNER 61231BCDS Bicsi Rene Rubio BICSI ID #112613 EXPIRES 12-31-26 RCDD SEAL

Jacobs
1100 NORTH GLEBE ROAD
SUITE 500
ARLINGTON, VIRGINIA 22201
571.218.1000
FAX: 571.218.1600
A/E INFO

APPROVED
DATE SIGNED 05/27/25
FOR COMMANDER NAVFAC 21HOOD
ACTIVITY
APPROVED BY LCDR ELIZABETH OLOKODE NAVFAC NLON FEAD DIRECTOR NEW LONDON, GROTON, CT
SATISFACTORY TO DATE 05/27/2025

DES RR	DRW RR	CHK SA	
PM/DM			SDS / RSF
BRANCH MANAGER			WRB
CHIEF ENG/ARCH			JWJ
FIRE PROTECTION			HPN

DEPARTMENT OF THE NAVY
NAVAL FACILITIES ENGINEERING SYSTEMS COMMAND
MID-ATLANTIC
NAVAL FACILITIES ENGINEERING SYSTEMS COMMAND - MID-ATLANTIC
NAVAL STATION - NORFOLK, VA
NAVAL SUBMARINE BASE NEW LONDON
GROTON, CONNECTICUT
P-1102 WEAPONS MAGAZINE & ORDNANCE OPERATIONS FACILITY
OPERATIONS
TELECOMMUNICATIONS ELEVATIONS

SCALE: AS NOTED
EPROJECT NO.: 1667770
CONSTR. CONTR. NO.
NAVFAC DRAWING NO. 12894058
SHEET 108 OF 140

T-202

6/20/2025 1:09:46 PM T-202
\\Qk1vs01\Redgy\PDZE1628\TELE\BLDG-1667770-T-BIM_v21.rvt

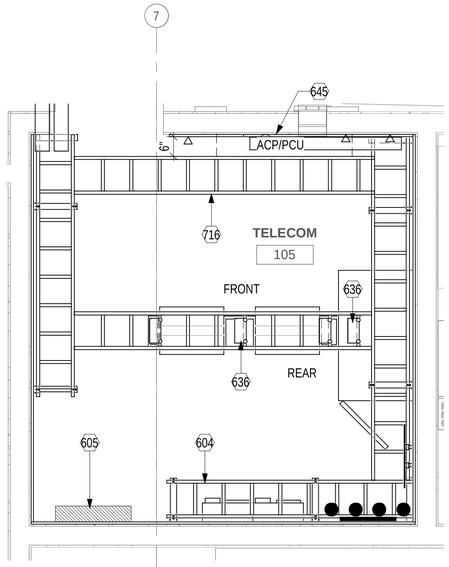

C1 TELECOMMUNICATIONS ENLARGED PLANS - ROOM 105 - CABLE TRAY

1/2" = 1'-0"

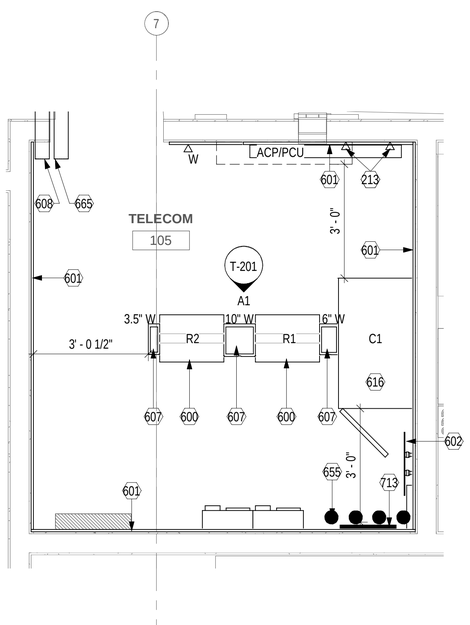

A1 TELECOMMUNICATIONS ENLARGED PLANS - ROOM 105

1/2" = 1'-0"

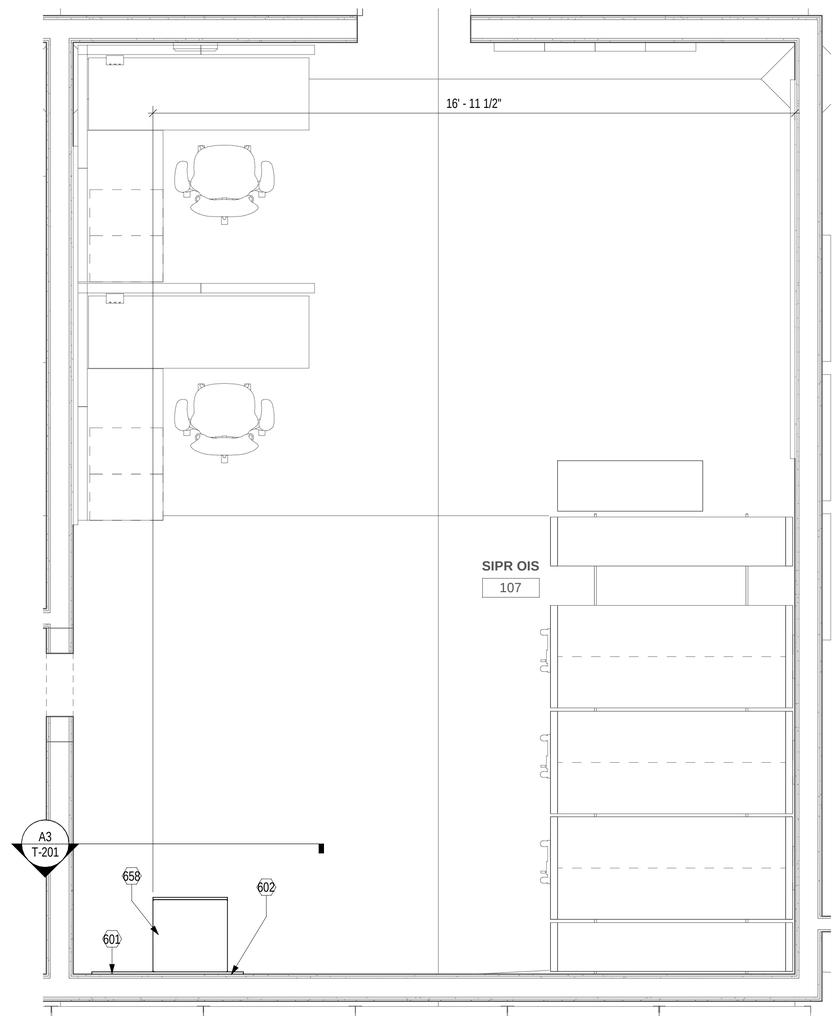

A3 TELECOMMUNICATIONS ENLARGED PLANS - SIPR OIS ROOM 107

1/2" = 1'-0"

GENERAL SHEET NOTES

A REFER TO SHEET T-001 FOR TELECOM SYMBOLS AND ABBREVIATIONS.

B BOND CABLE TRAY SECTIONS TOGETHER AND GROUND THE SYSTEM TO THE PBB/SBB.

C TELECOMMUNICATIONS RACKS AND/OR CABINTS MUST BE BONDED TO THE PBB/SBB

D TELECOMMUNICATIONS CONDUITS MUST BE BONDED TO THE PBB/SBB OR TO THE NEAREST CABLE TRAY OUTSIDE THE TR.

E PROVIDE INFRASTRUCTURE FOR GOVERNMENT FURNISHED GOVERNMENT INSTALLED SECUIRITY INTRUSION DETECTION SYSTEM AND ACCESS CONTROL SYSTEM. PROVIDE JUNCTION BOXES AND CONDUIT WITH PULL STRINGS.

F MAINTAIN SEPARATION BETWEEN ALL CLASSIFIED AND UNCLASSIFED CABLING IN ACCORDANCE WITH CNSSAM TEPMEST/1-13.

SHEET KEYNOTES

213 PROVIDE CATEGORY 6 WALL MOUNTED DATA OUTLETS FOR ESS EQUIPMENT. COORDINATE ROUGH IN HEIGHT WITH ESS PROVIDER.

600 PROVIDE TWO-POST EQUIPMENT RACK, 19" WIDE, UNIVERSAL, 84" HIGH, 45RU, BLACK, MARKED AND NUMBERED RACK UNITS, 1500LB LOAD CAPACITY. ANCHOR BASEPLATE ON ALL FOUR CORNERS TO CONCRETE SUBFLOOR. (TYPICAL)

601 PROVIDE AC GRADE FIRE TREATED 3/4" PLYWOOD ON WALLS AS SHOWN MOUNTED VERTICALLY 8" AFF . PAINT PLYWOOD WITH 2 EVEN COATS OF FIRE RETARDANT PAINT ON ALL SIDES. ATTACH USING AN ANCHORING SYSTEM SUITABLE FOR THE WALL TYPE (TYPICAL)

602 GROUND AND BOND EQUIPMENT RACKS AND LADDER PATHWAY TO PBB/SBB. INSTALL GROUND BAR AT HEIGHT INDICATED.

604 PROVIDE 12" WIDE STEEL LADDER RACK WITH FITTINGS. MOUNT LADDER RACK 8' AFF. (TYPICAL)

605 APPROXIMATE LOCATION OF ELECTRICAL PANEL BOARD. MAINTAIN OPERATIONAL CLEARANCES PER NEC.

607 PROVIDE DOUBLE-SIDED VERTICAL CABLE MANAGER PER SPECIFICATIONS. (TYPICAL)

608 PROVIDE FOUR INCH FIRE RATED SLEEVE SYSTEM FOR COMMUNICATIONS CABLING CAPABLE OF 100 PERCENT FILL.(TYPICAL)

616 FLOOR MOUNTED EQUIPMENT CABINET FOR NIPR NETWORK CABLING ONLY. MAINTAIN 3' MINIMUM CLEARANCE IN FRONT AND REAR OF CABINET. EQUIPPED WITH LOCKABLE FRONT AND REAR DOORS, INDIVIDUALLY KEYED, 84"H X 24"W X 36"D, FRONT AND REAR VERTICAL MOUNTING RAILS, GROUND BUS BAR BONDED TO THE TELECOM GROUNDING SYSTEM.

636 PROVIDE WATERFALL FITTING WHERE CABLING EXITS LADDER RACK TO MAINTAIN PROPER BEND RADIUS. (TYPICAL)

645 SPACE RESERVED FOR ACCESS CONTROL AND INTRUSION DETECTION EQUIPMENT. COORDINATE 110VAC POWER WITH E.C.

655 ROUTE NEW 2X2 DUCTBANK BETWEEN THE NEW TMH01 AND TELECOM RM 105 IN-GROUND AND BELOW THE OPERATIONS BUILDING (BLDG A) SLAB. REF TS-101

658 PROVIDE WALL-MOUNTED EQUIPMENT ENCLOSURE MOUNTED 6' AFF AS INDICATED. CABLING FOR SIPR DROPS ORIGINATES FROM A DEDICATED 24-PORT PATCH PANEL. PROVIDE TWO CAT6 DATA CABLES BETWEEN THE WALL CABINET AND TELECOM 105. COORDINATE POWER WITH EC.

665 PROVIDE 4" CONDUIT FOR CONNECTION BETWEEN SIPR OIS 107 AND TELECOM 105. INCLUDE 18" X 18" X 8" PULL BOX.

713 PROVIDE 18"W VERTICAL STEEL LADDER RACK WITH FOOT KIT, WALL BRACKETS, AND FITTINGS TO PROVIDE SECURE PATHWAY BETWEEN ENTRY CONDUITS AND OVERHEAD LADDER.

716 PROVIDE LADDER RACK TRAPEZE SUPPORT IN CENTER OF SECTION USING MIN 3/8" ALL THREAD ROD AND CORRECT HARDWARE. STAND OFF SECTION FROM WALL 6" TO ALLOW FOR SECURITY WIRING TROUGH ACCESS TO PANELS BELOW.

0 1' 2' 4' 6'

1/2" = 1'-0"

PLAN NORTH

SYM	DESCRIPTION	DATE	APPR

NAVFAC

REGISTERED COMMUNICATIONS DISTRIBUTION DESIGNER
6/23/2025
Bicsi
Rene Rubio
BICSI ID #112613
EXPIRES 12-31-26
RCDD
SEAL

Jacobs
1100 NORTH GLEBE ROAD
SUITE 500
ARLINGTON, VIRGINIA 22201
571.218.1000
FAX: 571.218.1600

A/E INFO

APPROVED

FOR COMMANDER NAVFAC

ACTIVITY
APPROVED BY LCDR ELIZABETH OLOKODE NAVFAC NLON FEAD DIRECTOR NEW LONDON, GROTON, CT

SATISFACTORY TO DATE 05/27/2025

DES	RR	DRW	RR	CHK	SA

PM/DM	SDS / RSF
BRANCH MANAGER	WRB
CHIEF ENG/ARCH	JWJ
FIRE PROTECTION	HPN

DEPARTMENT OF THE NAVY
NAVAL FACILITIES ENGINEERING SYSTEMS COMMAND
MID-ATLANTIC
NAVAL FACILITIES ENGINEERING SYSTEMS COMMAND - MID-ATLANTIC
NAVAL STATION - NORFOLK, VA
NAVAL SUBMARINE BASE NEW LONDON
GROTON, CONNECTICUT
P-1102 WEAPONS MAGAZINE & ORDNANCE OPERATIONS FACILITY
OPERATIONS
TELECOMMUNICATIONS ENLARGED PLANS

SCALE: AS NOTED

EPROJECT NO.: 1667770

CONSTR. CONTR. NO.

NAVFAC DRAWING NO.
12894059

SHEET 109 OF 140

T-401

6/20/2025 1:09:58 PM T-401
\\bk21vs01\Hdqs\PDZE16293\TE\ELE\BLDG-1667770-T-BIM_v21.rvt

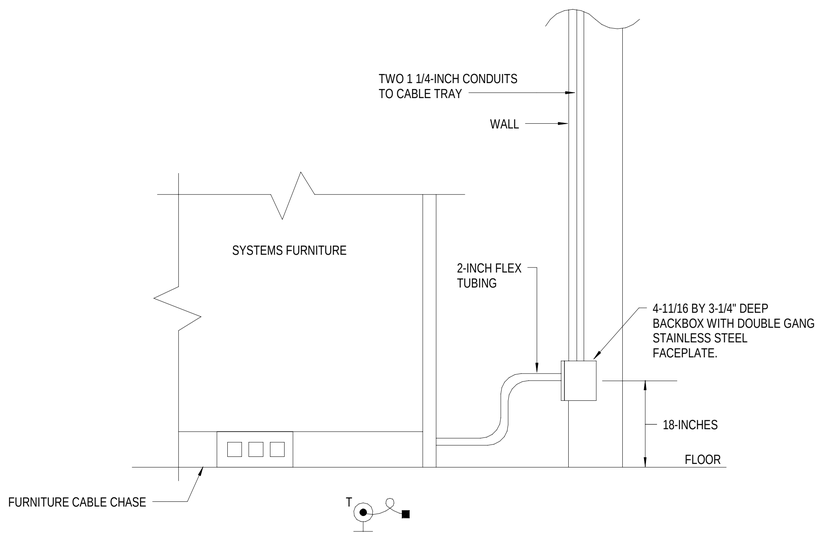

C1 MODULAR SYSTEMS FURNITURE OUTLET INSTALLATION

NTS

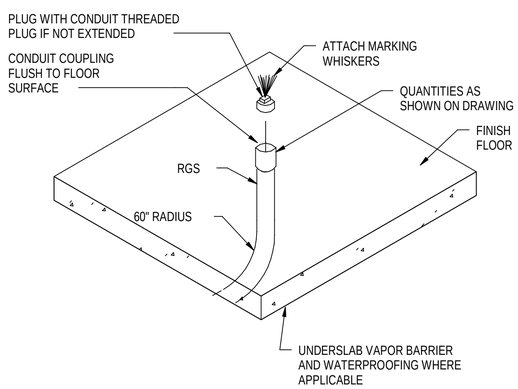

A1 4" UNDERGROUND CONDUIT STUB-UP

NTS

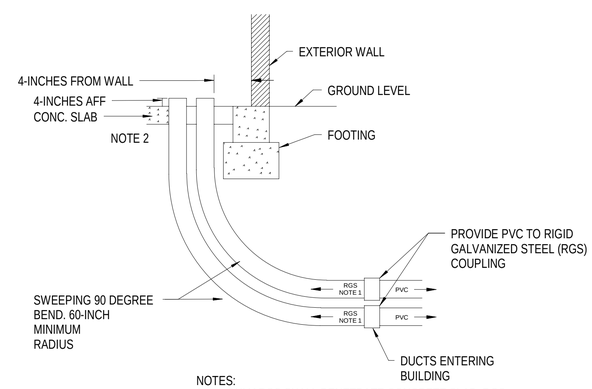

NOTES:

1. ONLY RGS SHALL PENETRATE CONCRETE SLAB. RGS MUST BE FACTORY COATED WITH PVC OR BE WRAPPED WITH A MINIMUM OF TWO LAYERS OF WATERPROOF PIPE TAPE.
2. SEAL AROUND CONDUITS AT PENETRATION THROUGH VAPOR BARRIER (NOT SHOWN)
3. ACTUAL CONDUIT CONFIGURATION IN EACH BUILDING WILL SPLAY INTO SINGLE ROW.

A3 CONDUIT FACILITY PENETRATION

NTS

SYM	DESCRIPTION	DATE	APPR

NAVFAC

REGISTERED COMMUNICATIONS DISTRIBUTION DESIGNER
6/23/2025
Bicsi
Rene Rubio
BICSI ID #112613
EXPIRES 12-31-26
RCDD
SEAL

Jacobs
1100 NORTH GLEBE ROAD
SUITE 500
ARLINGTON, VIRGINIA 22201
571.218.1000
FAX: 571.218.1600

A/E INFO

APPROVED

FOR COMMANDER NAVFAC

ACTIVITY
APPROVED BY LCDR ELIZABETH
OLOKODE NAVFAC NLON FEAD
DIRECTOR NEW LONDON, GROTON, CT

SATISFACTORY TO DATE 05/27/2025

DES	DRW	CHK
RR	RR	SA

PM/DM	SDS / RSF
BRANCH MANAGER	WRB
CHIEF ENG/ARCH	JWJ
FIRE PROTECTION	HPN

DEPARTMENT OF THE NAVY
NAVAL FACILITIES ENGINEERING SYSTEMS COMMAND
MID-ATLANTIC
NAVAL FACILITIES ENGINEERING SYSTEMS COMMAND - MID-ATLANTIC
NAVAL STATION - NORFOLK, VA
NAVAL SUBMARINE BASE NEW LONDON
GROTON, CONNECTICUT
P-1102 WEAPONS MAGAZINE & ORDNANCE OPERATIONS FACILITY
OPERATIONS
TELECOMMUNICATIONS DETAILS

SCALE: AS NOTED
EPROJECT NO.: 1667770
CONSTR. CONTR. NO.
NAVFAC DRAWING NO.
12894060
SHEET 110 OF 140
T-501

6/20/2025 11:10:03 PM T-501
\\bk1vs01\Redp\PDZE1628\TELE\BLDG-1667770-T-BIM_v21.rvt

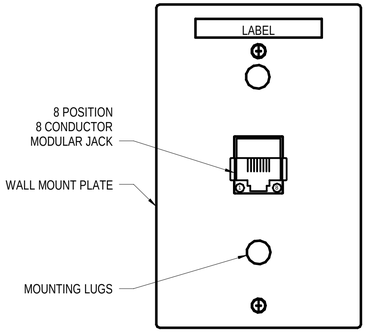

D1 WALL MOUNT PHONE FACEPLATE
NTS

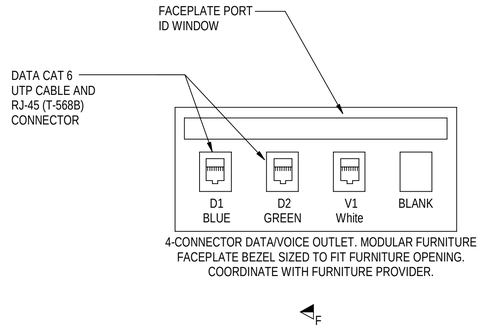

4-CONNECTOR DATA/VOICE OUTLET. MODULAR FURNITURE FACEPLATE BEZEL SIZED TO FIT FURNITURE OPENING. COORDINATE WITH FURNITURE PROVIDER.

D2 MODULAR FURNITURE AND VOICE OUTLET
NTS

* UN-NUMBERED CUBICLE: WHEN A CUBICAL AREA IS FOUND UNNUMBERED, IT MUST BE NUMBERED CLOCK-WISE FROM NORTH. THE ASSIGNED NUMBERS WILL BE NOTED ON THE RED LINED FLOOR PLAN.

* IF WIRING CLOSET ROOM NUMBER IS NOT AVAILABLE, LABEL WIRING CLOSETS, M01 FOR MAIN 01, S01 FOR SUB-CLOSET 01, AND CLOCK-WISE FROM NORTH.

* IF ROOM NUMBERS ARE UNAVAILABLE, START NUMBERING ROOMS NORTH TO SOUTH, WEST TO EAST.

* DROP NUMBERS ARE IN SEQUENCE BY WIRING CLOSET.

*PATCH PANELS ARE IDENTIFIED BY A NUMBER FOLLOWED BY F FOR FRONT AND B FOR BACK AS NECESSARY

* NUMBERS NEXT TO JACKS ARE ALWAYS D1, D2, S1, S2, AND V2, AS THEY ARE PART OF THE CABLE ID CONVENTION AND NOT A PATCH PANEL NUMBER. D IS FOR DATA AND V FOR VOICE OVER IP.

NOTE: THIS NGEN WALL PLATE NAMING SCHEME SUPERCEDES ALL EXISTING LABELING SCHEMES IN PLACE.

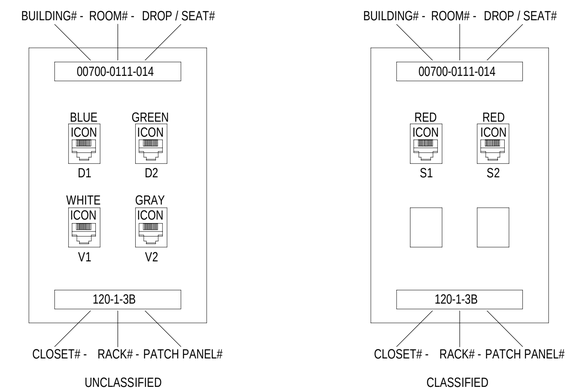

D4 WALL PLATE
NTS

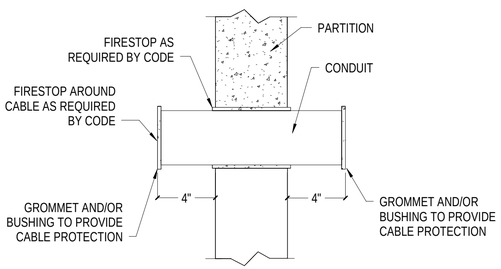

C1 TYPICAL SLEEVE IN RATED WALL
NTS

568A PIN CONFIGURATION

PIN	WIRE COLOR
1	WHITE/ORANGE
2	ORNGE
3	WHITE/GREEN
4	BLUE
5	WHITE/BLUE
6	GREEN
7	WHITE/BROWN
8	BROWN

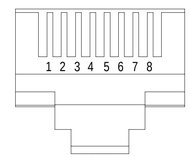

C2 568B PIN OUT CONFIGURATION
NTS

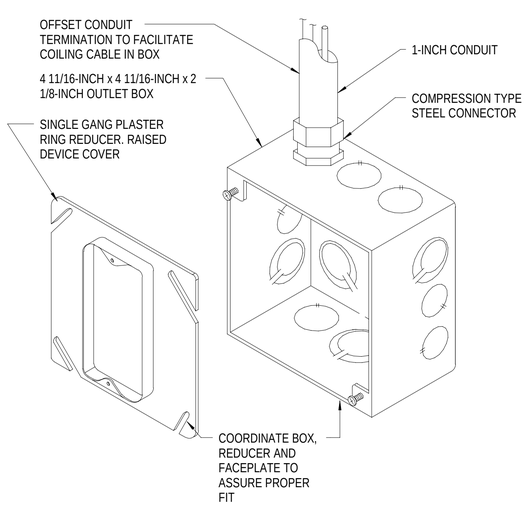

A1 WALL MOUNTED OUTLET BOX DETAIL
NTS

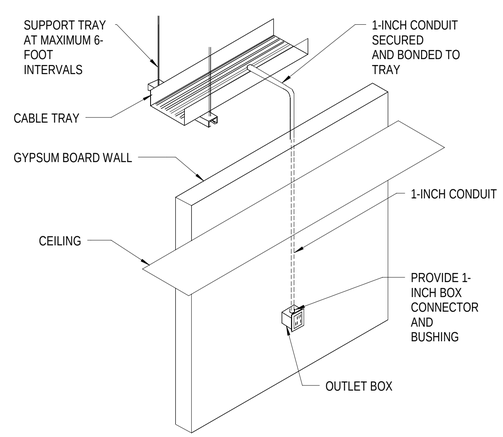

A2 TYPICAL OUTLET DROP
NTS

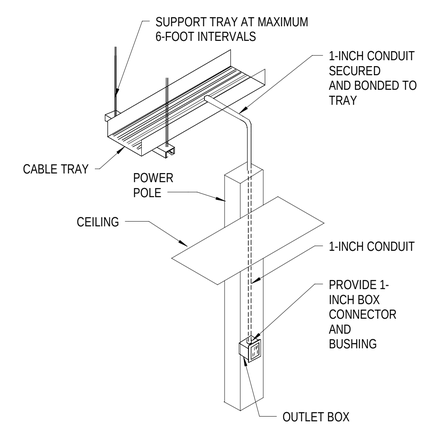

A4 TYPICAL POWER POLE OUTLET DROP
NTS

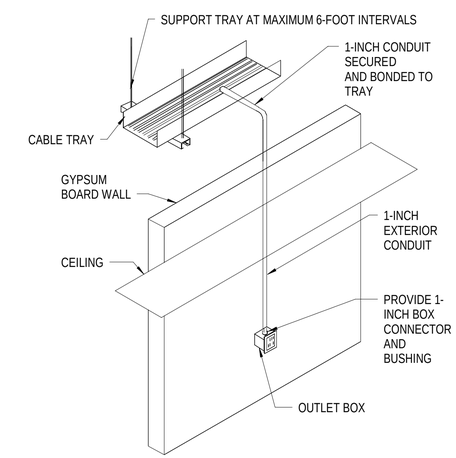

A5 TYPICAL SIPR OUTLET DROP
NTS

SYM	DESCRIPTION	DATE	APPR

Jacobs
1100 NORTH GLEBE ROAD
SUITE 500
ARLINGTON, VIRGINIA 22201
571.218.1000
FAX: 571.218.1600

A/E INFO

APPROVED

FOR COMMANDER NAVFAC

ACTIVITY
APPROVED BY LCDR ELIZABETH OLOKODE NAVFAC NLON FEAD DIRECTOR NEW LONDON, GROTON, CT

SATISFACTORY TO DATE 05/27/2025

DES	RR	DRW	RR	CHK	SA
PM/DM	SDS / RSF				
BRANCH MANAGER	WRB				
CHIEF ENG/ARCH	JWJ				
FIRE PROTECTION	HPN				

DEPARTMENT OF THE NAVY
NAVAL FACILITIES ENGINEERING SYSTEMS COMMAND - MID-ATLANTIC
NAVAL FACILITIES ENGINEERING SYSTEMS COMMAND
MID-ATLANTIC
NAVAL SUBMARINE BASE NEW LONDON
NAVAL STATION - NORFOLK, VA
GROTON, CONNECTICUT
P-1102 WEAPONS MAGAZINE & ORDNANCE OPERATIONS FACILITY
OPERATIONS
TELECOMMUNICATIONS DETAILS

SCALE: AS NOTED
EPROJECT NO.: 1667770
CONSTR. CONTR. NO.
NAVFAC DRAWING NO. 12894061
SHEET 111 OF 140
T-502

6/20/2025 11:10:11 PM T-502
\\bk1vs01\eapjf\DZE1628\TELE\BLDG-1667770-T-BIM_v21.rvt

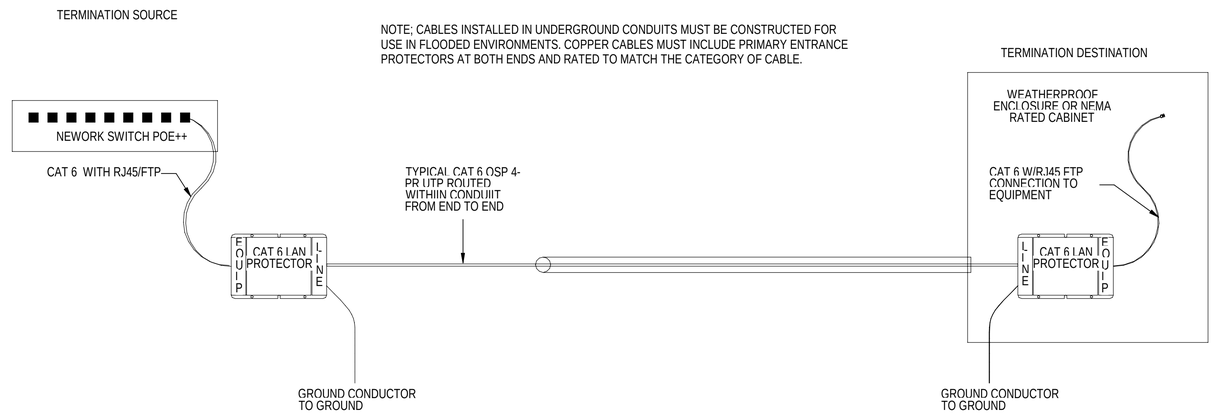

C1 OSP COPPER CHANNEL LINK - PROTECTED - OSP CAMERAS

NTS

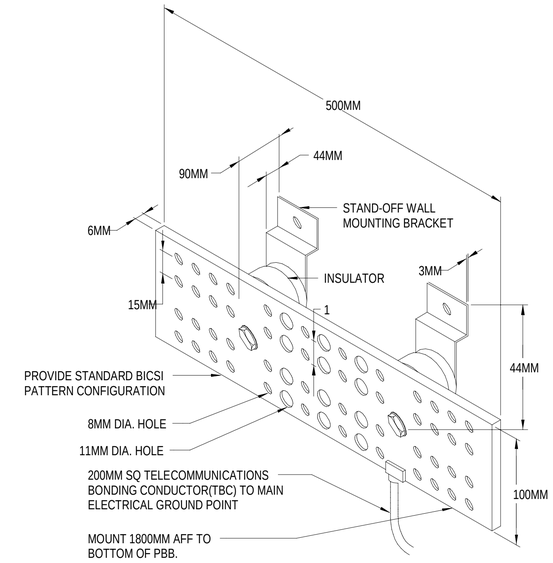

C4 PRIMARY BONDING BUSBAR (PBB) DETAIL

NTS

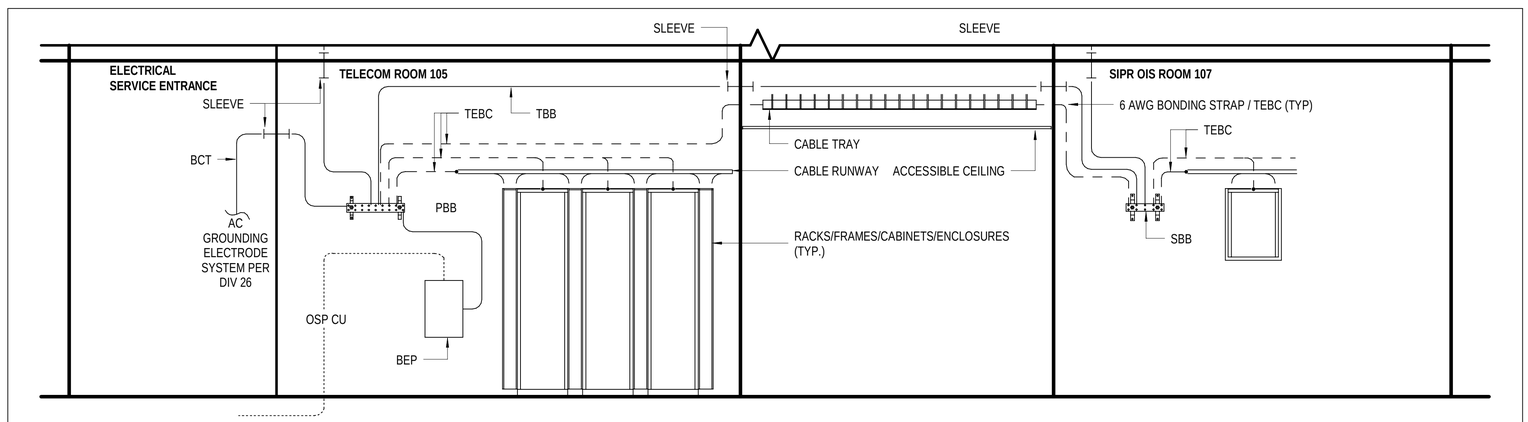

GENERAL NOTES:

A. THIS DETAIL CONVEYS REQUIREMENTS FOR THE CONSTRUCTION OF THE GROUNDING AND BONDING SYSTEM TO PROVIDE A PERMANENT BONDING INFRASTRUCTURE FOR COMMUNICATIONS SYSTEMS. THOSE ELEMENTS THAT ARE PRESENT MUST BE GROUNDED AS SHOWN. REFER TO FLOOR PLANS, ELEVATIONS, AND SPECIFICATIONS FOR EXACT LOCATIONS OF GROUNDING AND BONDING ELEMENTS.

B. THE TELECOMMUNICATIONS GROUNDING AND BONDING SYSTEM IS BONDED TO THE BUILDING GROUNDING SYSTEM AND IS INTENDED TO PROVIDE A PERMANENT BONDING INFRASTRUCTURE FOR COMMUNICATIONS SYSTEMS. THE PERFORMANCE OF TELECOMMUNICATIONS GROUNDING AND BONDING SYSTEM IS DEPENDANT UPON THE INTEGRITY OF THE BUILDING GROUNDING SYSTEM. THE BUILDING GROUNDING SYSTEM IS COMPRISED OF THE AC ELECTRODE GROUNDING SYSTEM AND THE EQUIPMENT GROUNDING SYSTEM SPECIFIED IN THE DIVISION 26 SPECIFICATION SECTION ELECTRICAL – GROUNDING AND BONDING FOR ELECTRICAL SYSTEMS.

C. GROUNDING BACKBONE, ALL CONDUIT SLEEVES AND PBB / SBB IN EACH TR PROVIDED BY ELECTRICAL CONTRACTOR.

D. GROUNDING TO ELEMENTS WITHIN TR PROVIDED BY TECHNOLOGY CONTRACTOR.

E. CABLE TRAY AND GROUNDING OF CABLE TRAY BY ELECTRICAL CONTRACTOR.

F. CABLE RUNWAY AND GROUNDING OF CABLE RUNWAY BY TECHNOLOGY CONTRACTOR.

G. GROUNDING EQUALIZERS (GEs) ARE NOT SHOWN ON THE DETAIL FOR CLARITY AND ARE NOT ALWAYS REQUIRED. REFER TO THE ELECTRICAL CONTRANCTOR AND DIVISION 26 SPECIFICATIONS FOR ADDITIONAL REQUIREMENTS.

H. THE CONDUIT SLEEVE(S) FOR THE ROUTING OF THE GROUNDING CONDUCTORS MUST BE SIZED ACCORDING TO THE LATEST EDITION OF THE NEC. THE MINIMUM SIZE SHALL BE 1-INCH.

LEGEND

————	INSULATED GROUND WIRE
- - - - -	6 AWG STRANDED, GREEN INSULATED GROUND WIRE
.....	OSP COPPER CABLE

TBB CONDUCTOR SIZES

0 TO 20 FEET	=	#4 AWG
20 TO 26 FEET	=	#3 AWG
26 TO 33 FEET	=	#2 AWG
33 TO 44 FEET	=	#1 AWG
44 TO 52 FEET	=	#1/0 AWG
52 TO 66 FEET	=	#2/0 AWG
GREATER THAN 66 FEET	=	#3/0 AWG

A1 GROUNDING AND BONDING SYSTEM

NTS

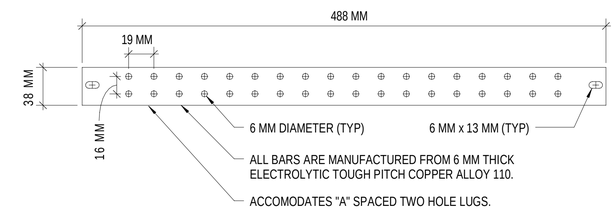

B4 RACK BONDING BUSBAR (RBB) DETAIL

NTS

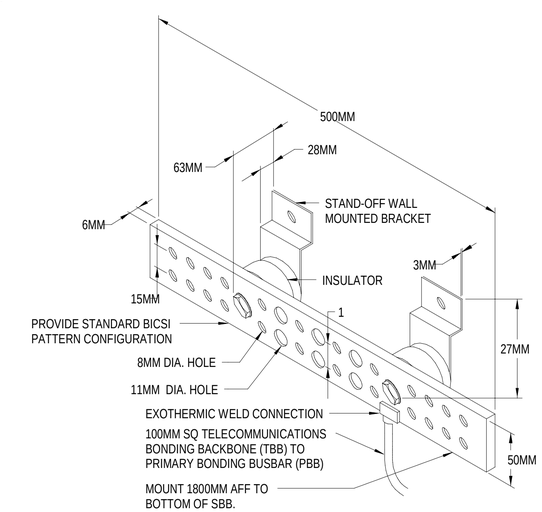

A4 SECONDARY BONDING BUSBAR (SBB) DETAIL

NTS

SYM	DESCRIPTION	DATE	APPR

NAVFAC

REGISTERED COMMUNICATIONS DISTRIBUTION DESIGNER 61231BCDS Bicsi Rene Rubio BICSI ID #112613 EXPIRES 12-31-26 RCDD SEAL

Jacobs
1100 NORTH GLEBE ROAD
SUITE 500
ARLINGTON, VIRGINIA 22201
571.218.1000
FAX: 571.218.1600

AE INFO

APPROVED

FOR COMMANDER NAVFAC

ACTIVITY:
APPPROVED BY LCDR ELIZABETH OLOKODE NAVFAC NLON FEAD DIRECTOR NEW LONDON, GROTON, CT

SATISFACTORY TO DATE 05/27/2025

DES RR	DRW RR	CHK SA	
PM/DM	SDS / RSF		
BRANCH MANAGER	WRB		
CHIEF ENG/ARCH	JWJ		
FIRE PROTECTION	HPN		

DEPARTMENT OF THE NAVY
NAVAL FACILITIES ENGINEERING SYSTEMS COMMAND
MID-ATLANTIC
NAVAL FACILITIES ENGINEERING SYSTEMS COMMAND - MID-ATLANTIC
NAVAL STATION - NORFOLK, VA
NAVAL SUBMARINE BASE NEW LONDON
GROTON, CONNECTICUT
P-1102 WEAPONS MAGAZINE & ORDNANCE OPERATIONS FACILITY
OPERATIONS
TELECOMMUNICATIONS DETAILS

SCALE: AS NOTED
EPROJECT NO.: 1667770
CONSTR. CONTR. NO.
NAVFAC DRAWING NO. 12894062
SHEET 112 OF 140

T-503

6/20/2025 1:10:18 PM T-503
\\dc1vs01fesp\PROJECT\628\TELE\BLDG-1667770-T-BIM_v21.rvt

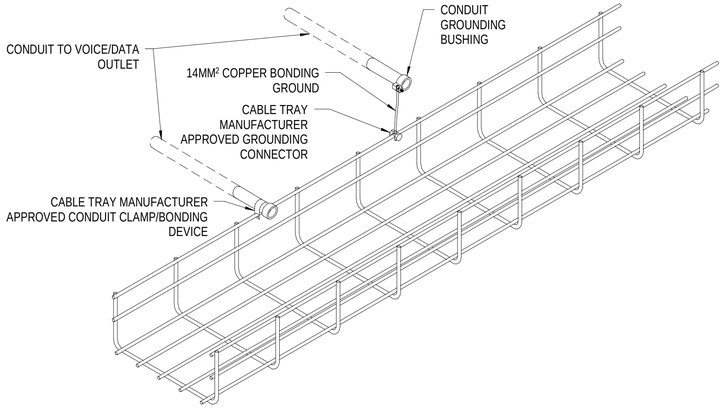

INSTALL WATERFALLS WHERE CABLES LEAVE THE TRAY IN ORDER TO PROVIDE PROPER BEND RADIUS.

C1 CABLE TRAY - BASKET TYPE2

NTS

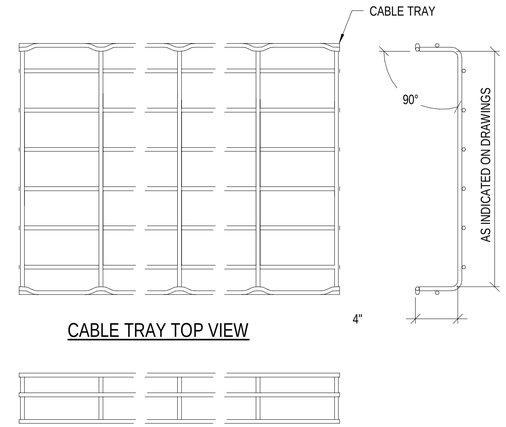

CABLE TRAY TOP VIEW

CABLE TRAY SIDE VIEW

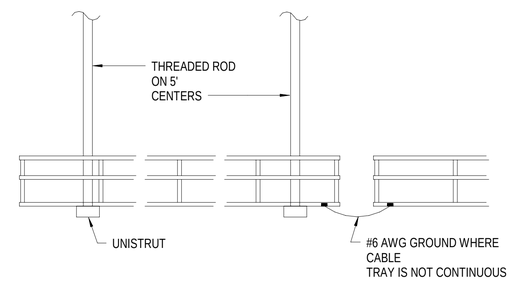

MOUNTING AND BONDING DETAIL

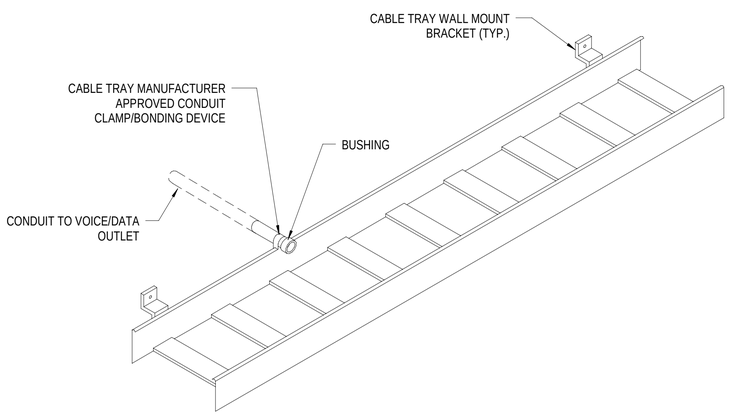

INSTALL WATERFALLS WHERE CABLES LEAVE THE TRAY IN ORDER TO PROVIDE PROPER BEND RADIUS.

A1 CABLE TRAY - LADDER TYPE1

NTS

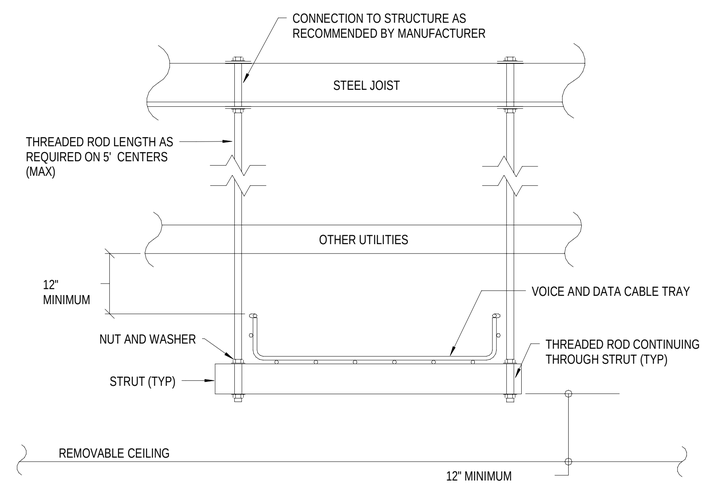

ABOVE CEILING MOUNTED CABLE TRAY

A3 TELECOM CABLE TRAY MOUNTING DETAILS

NTS

SYM	DESCRIPTION	DATE	APPR

NAVFAC

REGISTERED COMMUNICATIONS DISTRIBUTION DESIGNER
6123180085
Bicsi
Rene Rubio
BICSI ID #112613
EXPIRES 12-31-26
RCDD
SEAL

Jacobs
1100 NORTH GLEBE ROAD
SUITE 500
ARLINGTON, VIRGINIA 22201
571.218.1000
FAX: 571.218.1600
A/E INFO

APPROVED
FOR COMMANDER NAVFAC
ACTIVITY
APPROVED BY LCDR ELIZABETH OLOKODE NAVFAC NLON FEAD DIRECTOR NEW LONDON, GROTON, CT
SATISFACTORY TO DATE 05/27/2025

DES RR	DRW RR	CHK SA	
PM/DM	SDS / RSF		
BRANCH MANAGER	WRB		
CHIEF ENG/ARCH	JWJ		
FIRE PROTECTION	HPN		

DEPARTMENT OF THE NAVY
NAVAL FACILITIES ENGINEERING SYSTEMS COMMAND - MID-ATLANTIC
MID-ATLANTIC
NAVAL FACILITIES ENGINEERING SYSTEMS COMMAND
NAVAL STATION - NORFOLK, VA
NAVAL SUBMARINE BASE NEW LONDON
GROTON, CONNECTICUT
P-1102 WEAPONS MAGAZINE & ORDNANCE OPERATIONS FACILITY
OPERATIONS
TELECOMMUNICATIONS DETAILS

SCALE: AS NOTED
EPROJECT NO.: 1667770
CONSTR. CONTR. NO.
NAVFAC DRAWING NO. 12894063
SHEET 113 OF 140
T-504

6/20/2025 1:10:23 PM T-504
\\uc1.sys01\Redp\PROJECTS\28\TELE\BLDG-1667770-T-BIM_v21.rvt

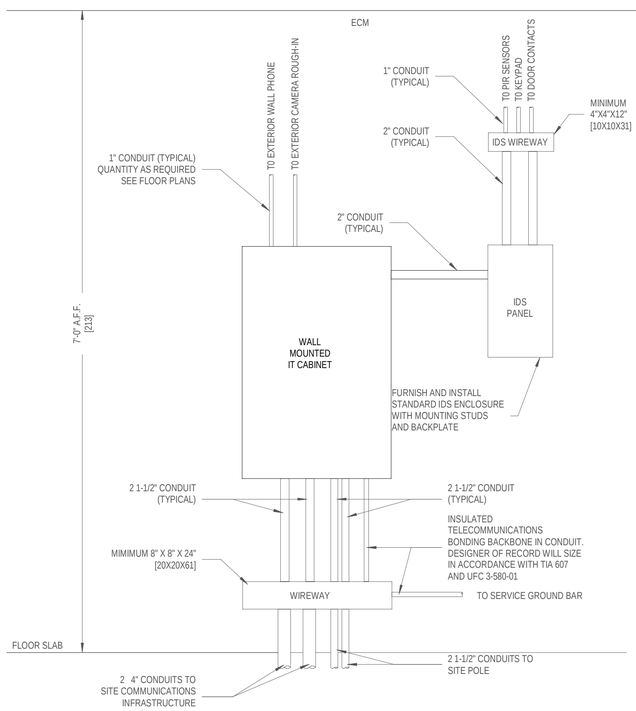

NOTE: WALL MOUNTED IT CABINET PROVIDED BY DIV 27. PATWAYS AND STRUCUTRES ARE SHOWN FOR COORDINATION AND REFERENCE WITH OTHER DISCIPLINES.

A1 TYPE G & H MAGAZINE WALL ELEVATION - TYPICAL

NTS

SYM	DESCRIPTION	DATE	APPR

NAVFAC

REGISTERED COMMUNICATIONS DISTRIBUTION DESIGNER
6123180085
Bicsi
Rene Rubio
BICSI ID #112613
EXPIRES 12-31-26
RCDD
SEAL

Jacobs
1100 NORTH GLEBE ROAD
SUITE 500
ARLINGTON, VIRGINIA 22201
571.218.1000
FAX: 571.218.1600

A/E INFO

APPROVED
FOR COMMANDER NAVFAC
8/14/2025

ACTIVITY
APPROVED BY LCDR ELIZABETH OLOKODE NAVFAC NLON FEAD DIRECTOR NEW LONDON, GROTON, CT

SATISFACTORY TO DATE 05/27/2025

DES	RR	DRW	RR	CHK	SA

PM/DM	SDS / RSF
BRANCH MANAGER	WRB
CHIEF ENG/ARCH	JWJ
FIRE PROTECTION	HPN

DEPARTMENT OF THE NAVY
NAVAL FACILITIES ENGINEERING SYSTEMS COMMAND
MID-ATLANTIC
NAVAL FACILITIES ENGINEERING SYSTEMS COMMAND - MID-ATLANTIC
NAVAL STATION - NORFOLK, VA
NAVAL SUBMARINE BASE NEW LONDON
GROTON, CONNECTICUT
P-1102 WEAPONS MAGAZINE & ORDNANCE OPERATIONS FACILITY
OPERATIONS
TELECOMMUNICATIONS DETAILS

SCALE: AS NOTED
EPROJECT NO.: 1667770
CONSTR. CONTR. NO.
NAVFAC DRAWING NO. 12894064
SHEET 114 OF 140

T-505

6/20/2025 1:10:29 PM T-505
\\ad.jacobs.com\eupj\PD2E\D28\TELE\BLDG-1667770-T-BIM_v21.rvt

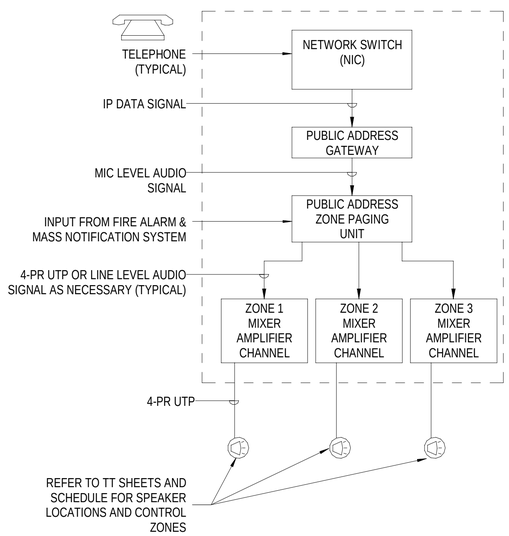

PUBLIC ADDRESS NOTES:

1. SPEAKER LAYOUT AND QUANTITIES DEPICT A PERFORMANCE LEVEL ENGINEERING DESIGN LAYOUT TO BE UTILIZED AS GUIDANCE FOR THE PLANNING OF THE PUBLIC ADDRESS SYSTEM. PROVIDE COMPLETE DOCUMENTS OR REVIEW AND APPROVAL FROM THE CONTRACTING OFFICER PRIOR TO INSTALLATION. INCLUDE IN THE SHOP DRAWINGS AND CALCULATIONS ANY ADDITIONAL EQUIPMENT NECESSARY TO PROVIDE A COMPLETE INSTALLATION AND COMPLY WITH LOCAL CODES AND AMENDMENTS.
2. ALL PUBLIC ADDRESS SYSTEM CONDUIT SHALL BE RUN INDEPENDANT OF ANY OTHER SYSTEM.
3. SPEAKERS AND VISUAL ALARMS SHALL BE SUITABLE FOR DAMP AND HAZARDOUS LOCATIONS AS NECESSARY.
4. GFGI TELEPHONE SYSTEM IS VOIP ENABLED. PROVIDE VOIP COMPATIBLE PUBLIC ADDRESS INTERFACE MODULE.

A1 PUBLIC ADDRESS SYSTEM

NTS

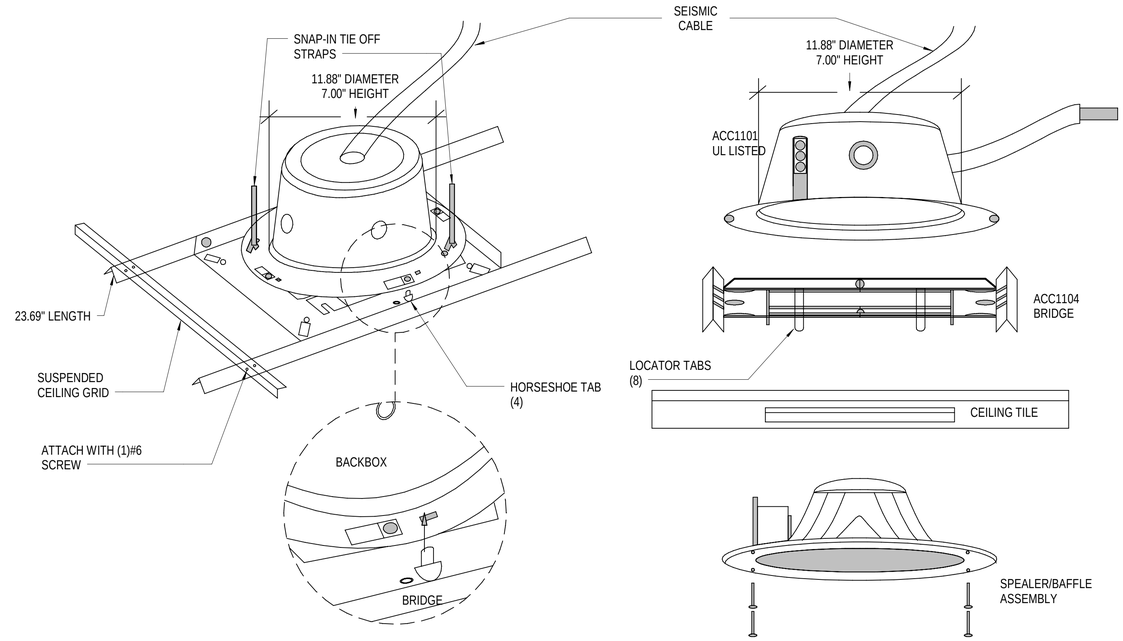

C3 SPEAKER - IN-LAY CEILING

NTS

PUBLIC ADDRESS SPEAKER SCHEDULE

SPEAKER NUMBER	PA ZONE	ROOM NUMBER
1	1	RM 125 E6 BUNKS
2	1	RM 125 E6 BUNKS
3	1	RM 122 E7 BUNKS
4	1	RM 123 LOCKER
5	1	RM 121 TOILETS/SHOWER
6	1	RM 116 TOILETS/SHOWER
7	1	RM 115 E7 BUNKS
8	1	RM 114 LOCKER
9	1	RM 113 E6 BUNKS
10	1	RM 113 E6 BUNKS
11	2	RM 126 OPERATIONAL SUPPORT
12	2	RM 126 OPERATIONAL SUPPORT
13	2	RM 126 OPERATIONAL SUPPORT
14	2	RM 126 OPERATIONAL SUPPORT
15	2	RM 126 OPERATIONAL SUPPORT
16	2	RM 126 OPERATIONAL SUPPORT
17	2	RM 126 OPERATIONAL SUPPORT
18	2	RM 126 OPERATIONAL SUPPORT
19	2	RM 126 OPERATIONAL SUPPORT
20	2	RM 126 OPERATIONAL SUPPORT
21	2	RM 126 OPERATIONAL SUPPORT
22	2	RM 126 OPERATIONAL SUPPORT
23	2	RM 111 ARMORY WORK BENCHES
24	2	RM 107 SIPR OIS
25	2	RM 126 OPERATIONAL SUPPORT
26	2	RM 110 ARMS ROOM
27	2	RM 107 SIPR OIS
28	2	102 CORRIDOR
29	2	RM 131 TRAINING/CONFERENCE
30	2	RM 131 TRAINING/CONFERENCE
31	2	102 CORRIDOR

PUBLIC ADDRESS SPEAKER SCHEDULE

SPEAKER NUMBER	PA ZONE	ROOM NUMBER
32	2	COFFEE MISC
33	2	RM 131 TRAINING/CONFERENCE
34	3	RM 112 STORAGE
35	3	RM 112 STORAGE
36	3	RM 112 STORAGE
37	3	RM 112 STORAGE
38	3	RM 103 ELECTRICAL
39	3	RM 104 MECHANICAL
40	3	RM 104 MECHANICAL

SYM	DESCRIPTION	DATE	APPR

NAVFAC

REGISTERED COMMUNICATIONS DISTRIBUTION DESIGNER
6123/1B085
Bicsi
Rene Rubio
BICSI ID #112613
EXPIRES 12-31-26
RCDD
SEAL

Jacobs
1100 NORTH GLEBE ROAD
SUITE 500
ARLINGTON, VIRGINIA 22201
571.218.1000
FAX: 571.218.1600

A/E INFO

APPROVED
FOR COMMANDER NAVFAC
ACTIVITY
APPROVED BY LCDR ELIZABETH OLOKODE NAVFAC NLON FEAD DIRECTOR NEW LONDON, GROTON, CT
SATISFACTORY TO DATE 05/27/2025

DES RR	DRW RR	CHK SA	
PMDM			SDS / RSF
BRANCH MANAGER			WRB
CHIEF ENGARCH			JWJ
FIRE PROTECTION			HPN

DEPARTMENT OF THE NAVY
NAVAL FACILITIES ENGINEERING SYSTEMS COMMAND
MID-ATLANTIC
NAVAL FACILITIES ENGINEERING SYSTEMS COMMAND - MID-ATLANTIC
NAVAL STATION - NORFOLK, VA
NAVAL SUBMARINE BASE NEW LONDON
GROTON, CONNECTICUT
P-1102 WEAPONS MAGAZINE & ORDNANCE OPERATIONS FACILITY
OPERATIONS
TELECOMMUNICATIONS DETAILS

SCALE: AS NOTED
EPROJECT NO.: 1667770
CONSTR. CONTR. NO.
NAVFAC DRAWING NO. 12894065
SHEET 115 OF 140
T-506

6/20/2025 1:10:33 PM T-506
\\dc1vs01\Revit\proj\FOZE1628\TELE\BLDG-1667770-T-BIM_v21.rvt

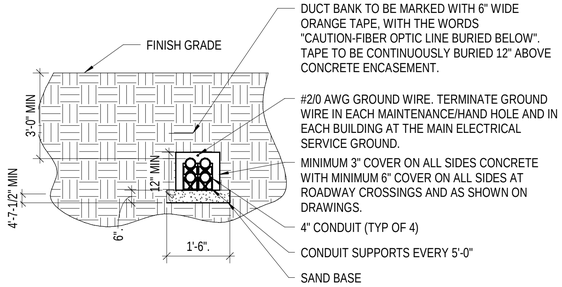

D1 DUCTBANK - (4) 4" 2X2
N.T.S.

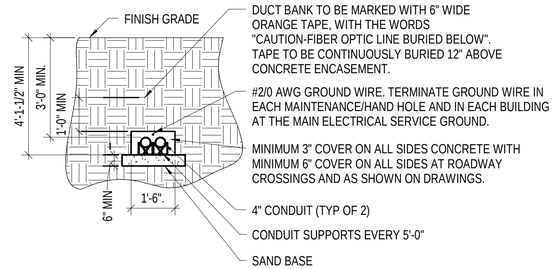

D2 DUCTBANK - (2) 4" 1X2
N.T.S.

GENERAL NOTES:
1. PROVIDE GRAVEL BASE WHERE REQUIRED TO MAINTAIN GRADE PER SPECIFICATIONS.
2. INSTALL DUCT BANKS AT REQUIRED DEPTHS DICTATED BY CIVIL ENGINEER'S SITE UTILITY DOCUMENTATION. COORDINATE AS REQUIRED.

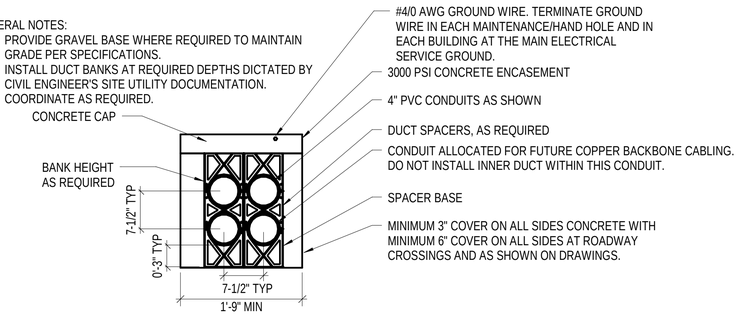

D4 DUCT BANK SECTION - TYPICAL 4 CONDUIT
N.T.S.

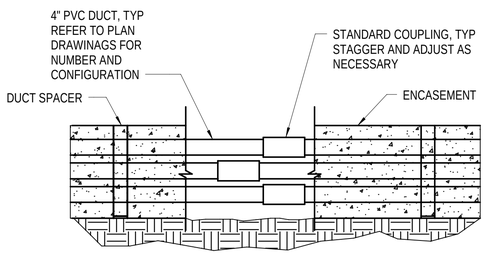

C1 DUCTBANK - COUPLER CONNECTION
N.T.S.

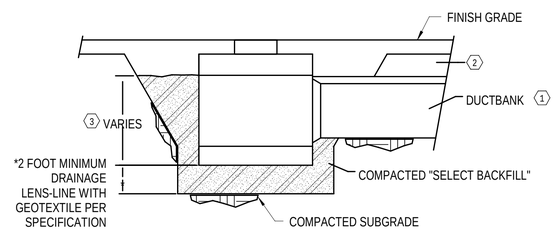

KEYED NOTES:
1. USE PEA GRAVEL OR PIT RUN SAND. SEE SPECIFICATION SECTION 31 20 00.
2. COVER WITH 6" MAXIMUM THICK REINFORCED CONCRETE ON ALL SIDES (3000 PSI).
3. INSTALL COMPACTED "SELECT BACKFILL" UP TO TOP OF DUCTBANK ELEVATION.

B3 DUCTBANK - HANDHOLE CONNECTION
N.T.S.

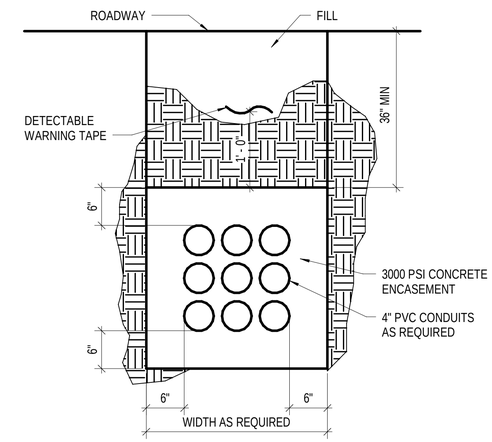

B4 DUCTBANK - UNDER ROADWAY
N.T.S.

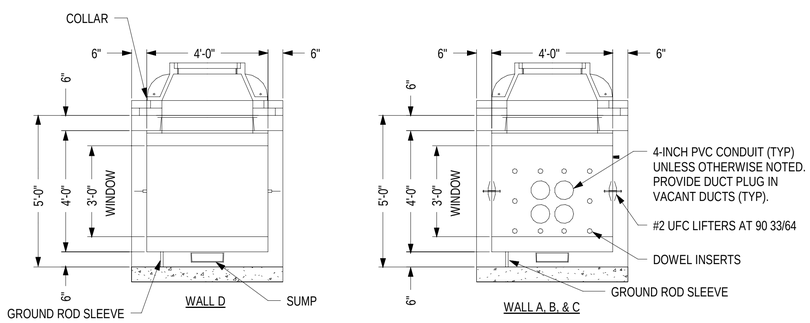

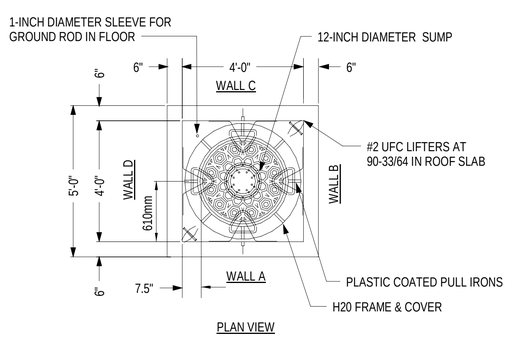

A1 HANDHOLE DETAILS - TYPE 3
NTS

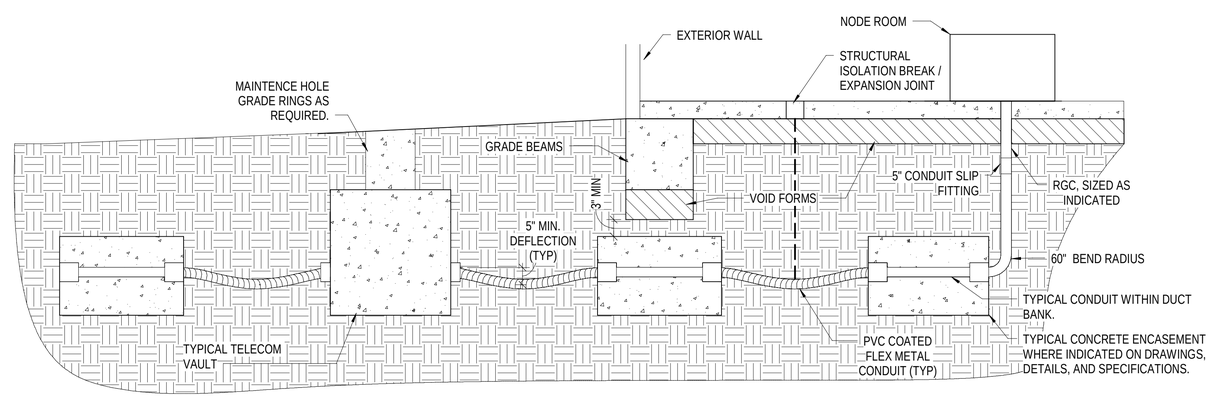

NOTES:
1. ELEVATION ABOVE SHOWS A TYPICAL SINGLE CONDUIT FOR ILLUSTRATION PURPOSES. REFER TO PLANS FOR ACTUAL QUANTITY OF CONDUITS.
2. REFER TO TYPICAL UNDERGROUND CONDUIT SECTION DETAIL FOR CONCRETE ENCASEMENT REQUIREMENTS.
3. REFER TO MANHOLE AND VAULT DETAILS FOR CONNECTION REQUIREMENTS.

A3 DUCT BANK SECTION - CONDUIT ROUTING ELEVATION
N.T.S.

SYM	DESCRIPTION	DATE	APPR

NAVFAC

REGISTERED COMMUNICATIONS DISTRIBUTION DESIGNER 6/23/2025 Bicsi Rene Rubio BICSI ID #112613 EXPIRES 12-31-26 RCDD SEAL

Jacobs
1100 NORTH GLEBE ROAD
SUITE 500
ARLINGTON, VIRGINIA 22201
571.218.1000
FAX: 571.218.1600
A/E INFO

APPROVED
FOR COMMANDER NAVFAC
ACTIVITY APPROVED BY LCDR ELIZABETH OLOKODE NAVFAC NLON FEAD DIRECTOR NEW LONDON, GROTON, CT
SATISFACTORY TO DATE 05/27/2025

DES RR	DRW RR	CHK SA	
PMDM			SDS / RSF
BRANCH MANAGER			WRB
CHIEF ENGARCH			JWJ
FIRE PROTECTION			HPN

DEPARTMENT OF THE NAVY
NAVAL FACILITIES ENGINEERING SYSTEMS COMMAND - MID-ATLANTIC
NAVAL FACILITIES ENGINEERING SYSTEMS COMMAND
MID-ATLANTIC
NAVAL SUBMARINE BASE NEW LONDON
NAVAL STATION - NORFOLK, VA
GROTON, CONNECTICUT
P-1102 WEAPONS MAGAZINE & ORDNANCE OPERATIONS FACILITY
OPERATIONS
TELECOMMUNICATIONS DETAILS

SCALE: AS NOTED
EPROJECT NO.: 1667770
CONSTR. CONTR. NO.
NAVFAC DRAWING NO. 12894066
SHEET 116 OF 140
T-507

6/20/2025 11:10:42 PM T-507
\\DL-1vs01\Web\pif\52E1628\TELE\BLDG-1667770-T-BIM_v21.rvt

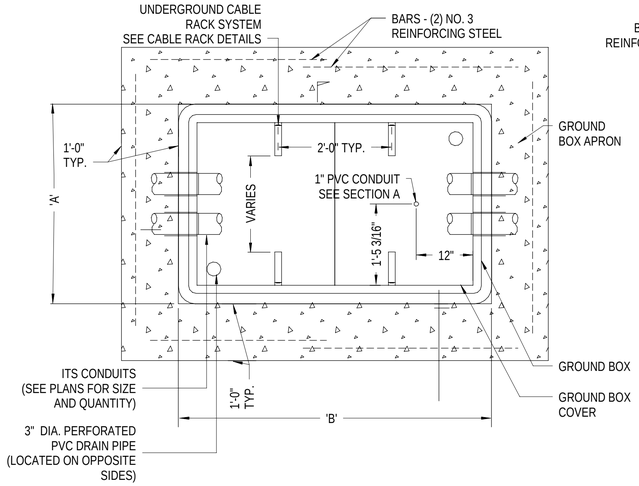

C1 TOP VIEW POLYMER CONCRETE GROUND BOX

12" = 1'-0"

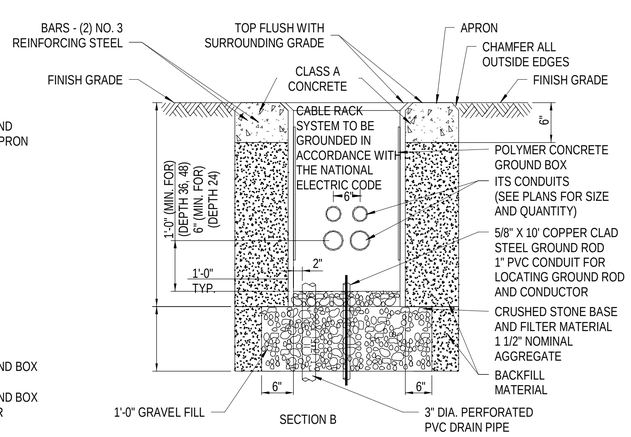

C2 GROUND BOX SECTION B

6" = 1'-0"

GENERAL NOTES:

1. CONDUIT SHOWN IS FOR EXAMPLE ONLY. ADDITIONAL CONDUITS MAY BE REQUIRED AS SHOWN ON THE PLANS.
2. PROVIDE POLYMER CONCRETE GROUND BOX AND COVER.
3. PROVIDE TYPE "2" GROUND BOXES WHEN SPLICE CLOSURE IS REQUIRED, AS SHOWN ON THE PLANS.
4. TERMINATE CONDUITS THROUGH THE SIDE OF THE GROUND BOX.
5. PROVIDE TERMINATORS FOR CONDUITS CAST IN THE WALLS AND PLACED SYMMETRICALLY ABOUT THE CENTERLINE OF THE BOX AT THE DEPTHS SHOWN, UNLESS OTHERWISE NOTED, FOR THE NUMBER OF CONDUITS IDENTIFIED ON THE PLANS TO ENTER THE BOX.
6. PROVIDE TERMINATORS APPROPRIATELY SIZED FOR THE CONDUITS INDICATED ON THE PLANS. PROVIDE TERMINATORS WITH AN AIR TIGHT AND WATER TIGHT CONNECTION.
7. PROVIDE GROUND BOX WITH OPEN BOTTOM. PROVIDE TWO 3" DIA. PERFORATED PVC DRAIN PIPES ON OPPOSITE CORNERS AND EXTEND 2" BELOW BOTTOM OF GRAVEL BED TO OPTIMIZE WATER DRAINAGE.
8. INSTALL GROUND BOX ON A 12-INCH BASE OF CRUSHED STONE WHICH EXTENDS 6 INCHES IN ALL DIRECTIONS FROM THE PERIMETER OF THE BOX. CRUSHED STONE WILL BE SUBSIDIARY TO SPECIAL SPECIFICATION, "ITS GROUND BOX".
9. WHEN ADDITIONAL CONDUIT ENTRY POINTS ARE NEEDED TO ACCOMMODATE EXISTING CONDUIT, CORE DRILL CONDUIT KNOCKOUTS IN THE FIELD OF THE APPROPRIATE NUMBER AND SIZE OF CONDUIT AT EACH LOCATION, AS DIRECTED BY THE ENGINEER.
10. PROVIDE A BELL FITTING ON THE END OF EACH CONDUIT TO ENSURE A FLUSH FIT INSIDE THE GROUND BOX.
11. CONCRETE GROUT AROUND THE KNOCKOUT (INSIDE AND OUT) AND AROUND THE CONDUIT AND BELL FITTING TO ENSURE A NEAT WATERTIGHT FIT AFTER THE CONDIUT AND BELL FITTING HAVE BEEN PLACED IN A KNOCKOUT. ENSURE ALL OPENING IN THE GROUND BOX ARE SEALED PRIOR TO GROUTING OPERATIONS.
12. LABEL TOP OF COVER WITH THE WORDS "COMMUNICATIONS".
13. EQUIP ALL COVERS WITH A BOLTING SYSTEM THAT WILL POSITIVELY SECURE THE COVER IN PLACE.
14. BACKFILL IN ACCORDANCE WITH ITEM 400, "EXCAVATION AND BACKFILL FOR STRUCTURES"
15. PROVIDE POLYMER CONCRETE GROUND BOXES AND COVERS FOR OFF ROADWAY APPLICATIONS SUBJECT OT OCCASIONAL NON-DELIBERATE HEAVY VEHICULAR TRAFFIC, SUCH AS DRIVEWAYS, ALONG SIDEWALKS, PARKING LOTS AND BEHIND NON-MOUNTABLE CURB. MEET AMERICAN NATIONAL STANDARDS INSTITUTE (ANSI) / SOCIETY OF CABLE TELECOMMUNICATIONS ENGINEERS (SCTE) TIER 22 LOADING REQUIREMENTS WHEN LOCATED IN THESE AREAS.
16. PROVIDE STEEL (ASTM A-153), GLASS REINFORCED NYLON, OR EQUIVALENT CABLE RACK ASSEMBLIES DESIGNED TO SUPPORT THE AMOUNT OF CABLE STROAGE SLACK AND SPLICE ENCLOSURES IDENTIFIED IN THE PLANS. LOCATE CABLE RACK SYSTEM ON ANY SIDE BUT ALLOW FOR SUFFICIENT ACCESS TO THE INSIDE OF THE GROUND BOX. CABLE RACKS MAY BE INSTALLED AT THE FACTORY OR IN THE FIELD. WHEN MOUNTING CABLE RACKS IN THE FIELD, SEAL ALL PENETRATIONS TO THE SIDE WALL TO PREVENT MOISTURE PENETRATION. GROUND METALLIC CABLE RACK SYSTEMS TO GROUNDING SYSTEM INSIDE GROUND BOX IN ACCORDANCE WITH THE NATIONAL ELECTRIC CODE.

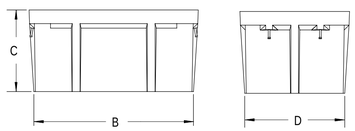

GROUND BOX SCHEDULE						
GROUND BOX TYPE	'A' * WIDTH (OUTSIDE) (INCHES	'B' * WIDTH (OUTSIDE) (INCHES	'C' * WIDTH (OUTSIDE) (INCHES	'D' * WIDTH (OUTSIDE) (INCHES	SIZE #3 BARS (APRON)	
					LENGTH	WEIGHT
TYPE 1	26	38	24, 36, 48		24'-0"	9.12
TYPE 2	40	63	24, 36, 48		32'-8"	12.45

* - TOLERANCE OF + / - 1.5"

B1 SIDE VIEW TYPICAL GROUND BOX

NTS

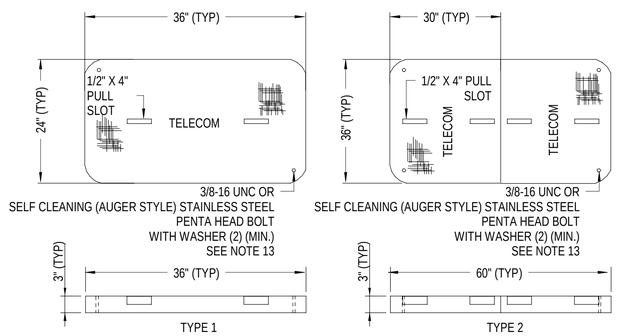

B2 GROUND BOX COVER TOP VIEW AND SIDE VIEW

12" = 1'-0"

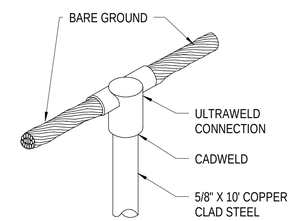

NOTE - ALL GROUNDING CONNECTIONS TO BE CADWELD OR APPROVED EQUAL. THIS WORK IS CONSIDERED INCIDENTAL TO THE ITS GROUND BOX

B4 GROUNDING CONNECTION DETAIL

NTS

NOTE:
OPTIONS SHOWN FOR CABLE RACKS AND ATTACHMENT METHODS. FURNISH SHOP DRAWINGS OF CABLE RACK AND CABLE RACK GROUNDING SYSTEM (IF APPLICABLE) FOR ENGINEER APPROVAL PRIOR TO INSTALLATION.

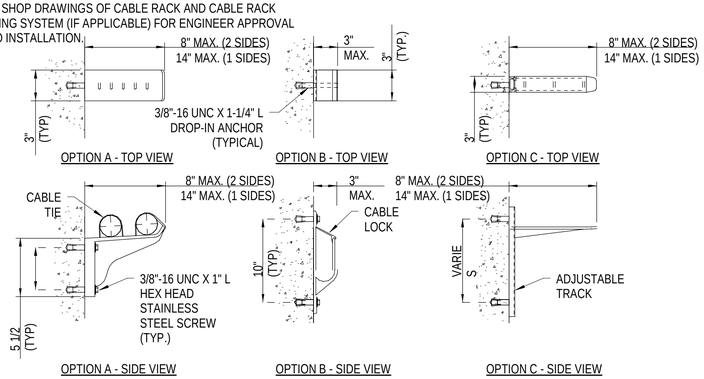

A1 CABLE RACK DETAILS

12" = 1'-0"

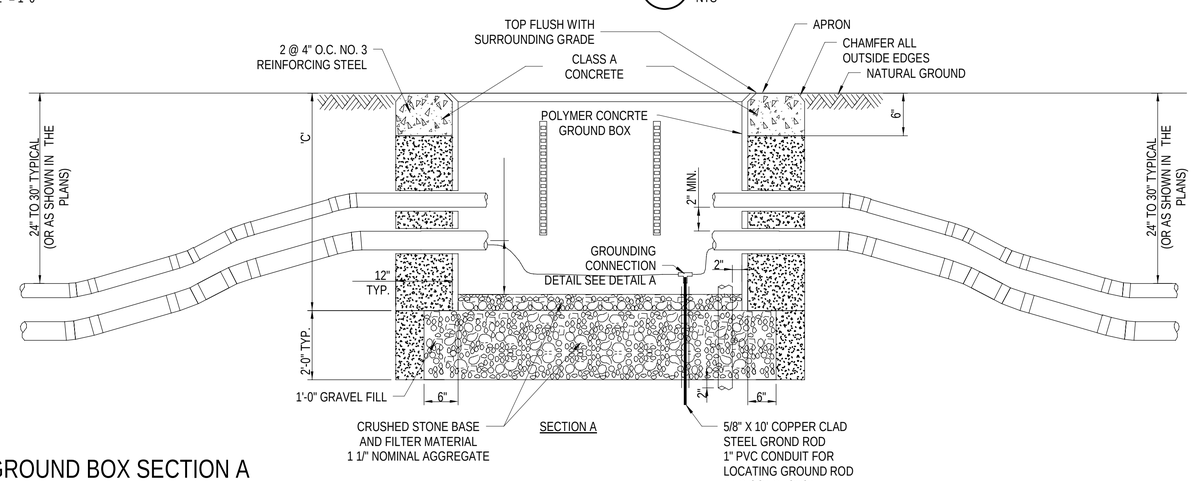

A2 GROUND BOX SECTION A

12" = 1'-0"

SYM	DESCRIPTION	DATE	APPR

NAVFAC

REGISTERED COMMUNICATIONS DISTRIBUTION DESIGNER 6123118085 Bicsi Rene Rubio BICSI ID #112613 EXPIRES 12-31-26 RCDD SEAL

Jacobs
1100 NORTH GLEBE ROAD
SUITE 500
ARLINGTON, VIRGINIA 22201
571.218.1000
FAX: 571.218.1600
A/E INFO

APPROVED
FOR COMMANDER NAVFAC
ACTIVITY: APPROVED BY LCDR ELIZABETH OLOKODE NAVFAC NLON FEAD DIRECTOR NEW LONDON, GROTON, CT
SATISFACTORY TO DATE 05/27/2025

DES	RR	DRW RR	CHK SA
PM/DM	SDS / RSF		
BRANCH MANAGER	WRB		
CHIEF ENG/ARCH	JWJ		
FIRE PROTECTION	HPN		

DEPARTMENT OF THE NAVY
NAVAL FACILITIES ENGINEERING SYSTEMS COMMAND - MID-ATLANTIC
NAVAL FACILITIES ENGINEERING SYSTEMS COMMAND MID-ATLANTIC
NAVAL STATION - NORFOLK, VA
NAVAL SUBMARINE BASE NEW LONDON
GROTON, CONNECTICUT
P-1102 WEAPONS MAGAZINE & ORDNANCE OPERATIONS FACILITY
OPERATIONS
TELECOMMUNICATIONS DETAILS

SCALE: AS NOTED
EPROJECT NO.: 1667770
CONSTR. CONTR. NO.
NAVFAC DRAWING NO. 12894067
SHEET 117 OF 140
T-508

6/20/2025 1:10:51 PM T-508
\\dc1-vs01\edsp\PDZE1628\TELE\BLDG-1667770-T-BIM_v21.rvt

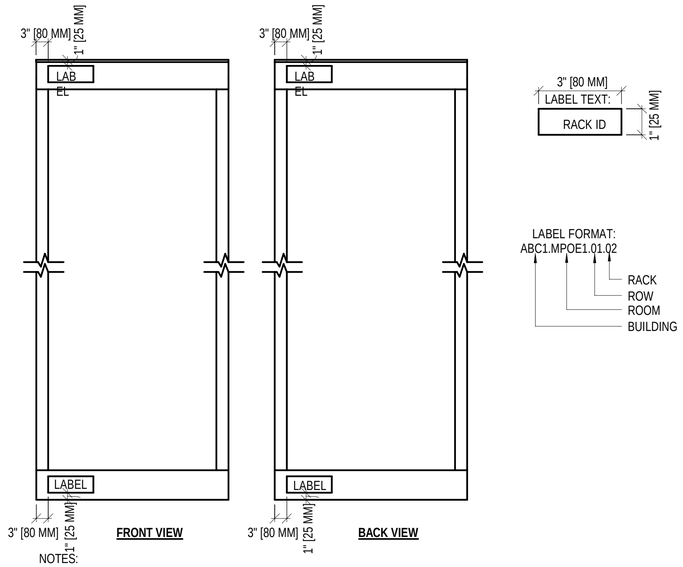

NOTES:
1. REFER TO SPECIFICATION 27 10 00 COMMUNICATIONS LABELING FOR LABEL MATERIAL.
2. LOCATE AS SHOWN ON THE LEFT SIDE OF THE RACK FACING THE FRONT OR BACK.
3. REFER TO ROOM ENLARGED PLANS FOR RACK IDs.
4. COORDINATE WITH OWNER.
5. DETAIL APPLIES TO 2-POST AND CABINET ENCLOSURES.

C1 EQUIPMENT RACK AND CABINET LABELING
NTS

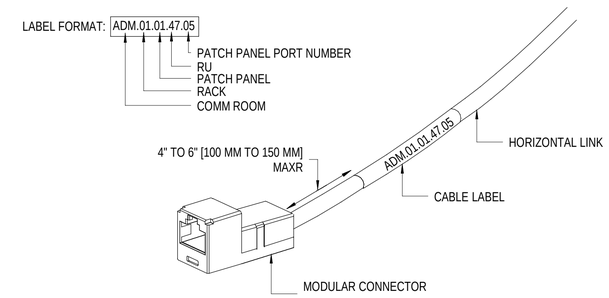

NOTES:
1. ROOM NUMBER SHOWN HERE AS EXAMPLE.
2. MODULAR CONNECTOR SHOWN FOR CLARITY, AND MAY NOT REFLECT ACTUAL CONNECTOR SPECIFIED FOR THIS PROJECT.
3. REFER TO PLANS FOR OUTLET PLACEMENT TO DERIVE CABLE ID LABELS.

C4 HORIZONTAL CABLE LABELING
NTS

NOTE:

1. TERMINAL PATCH PANELS ARE TYPICAL. SIZE, PORT COUNT AND STYLE WILL VARY BY MANUFACTURER. DIAGRAMMATIC ONLY.
2. FIRST THREE NUMERALS INDICATE THE UNIQUE OUTLET ID FOR ALL OUTLETS. ALPHA CHARACTERS INDICATE OUTLET PORT ID.
3. UNIQUE ID NUMBER FROM THE OUTLET ID SHOWN ON FLOOR PLANS, TYPICAL
4. FOR MULTI-PORT OUTLET LOCATIONS, UNIQUE ID NUMBER IS DUPLICATED FOR EACH ADDITIONAL CABLE. SHOWN IS AN EXAMPLE OF A FOUR-PORT OUTLET.

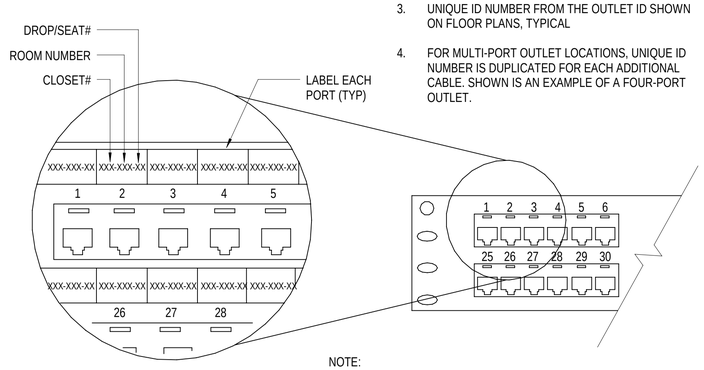

NOTE:

THE ABOVE IS AN EXAMPLE PATCH PANEL LABELING, AND IS NOT INTENDED TO BE EXACT OUTLET NUMBERING FOR THIS PROJECT.

A1 LABELING - PATCH PANEL
NTS

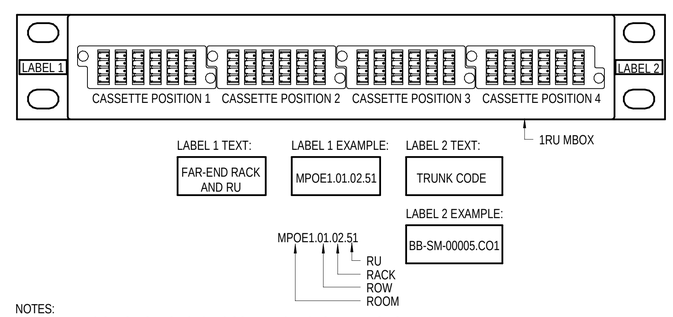

NOTES:
1. REFER TO SPECIFICATION 27 05 53 COMMUNICATIONS LABELING FOR LABEL MATERIAL.
2. DEPENDING ON TRUNK USE, THE FIBER PANEL MAY CONTAIN TWO, THREE, OR FOUR POSITIONS POPULATED. REFER TO RACK ELEVATIONS AND CABLE SCHEDULES FOR CONFIGURATION REQUIRED BY TRUNK. FIBER PANEL SHOWN IN THIS DETAIL.
3. REFER TO EXISTING CABLE RECORDS
4. REFER TO EXISTING LABEL CONVENTION AND CREATE SIMILAR AND MATCH

A4 FIBER PANEL LABEL - CORE FIBER TRUNKS
NTS

SYM	DESCRIPTION	DATE	APPR

NAVFAC

REGISTERED COMMUNICATIONS DISTRIBUTION DESIGNER
BICSI
Rene Rubio
BICSI ID #112613
EXPIRES 12-31-26
RCDD
SEAL

Jacobs
1100 NORTH GLEBE ROAD
SUITE 500
ARLINGTON, VIRGINIA 22201
571.218.1000
FAX: 571.218.1600

A/E INFO

APPROVED
FOR COMMANDER NAVFAC
ACTIVITY
APPROVED BY LCDR ELIZABETH OLOKODE NAVFAC NLON FEAD DIRECTOR NEW LONDON, GROTON, CT
SATISFACTORY TO DATE 05/27/2025

DES RR	DRW RR	CHK SA	
PM/DM	SDS / RSF		
BRANCH MANAGER	WRB		
CHIEF ENG/ARCH	JWJ		
FIRE PROTECTION	HPN		

DEPARTMENT OF THE NAVY
NAVAL FACILITIES ENGINEERING SYSTEMS COMMAND
MID-ATLANTIC
NAVAL FACILITIES ENGINEERING SYSTEMS COMMAND - MID-ATLANTIC
NAVAL STATION - NORFOLK, VA
NAVAL SUBMARINE BASE NEW LONDON
GROTON, CONNECTICUT
P-1102 WEAPONS MAGAZINE & ORDNANCE OPERATIONS FACILITY
OPERATIONS
TELECOMMUNICATIONS DETAILS

SCALE: AS NOTED
EPROJECT NO.: 1667770
CONSTR. CONTR. NO.
NAVFAC DRAWING NO. 12894068
SHEET 118 OF 140
T-509

6/20/2025 1:10:57 PM T-509
\\bk21vs01\Revit\pr\PDZE1628\TE ELE\BLDG-1667770-T-BIM_v21.rvt

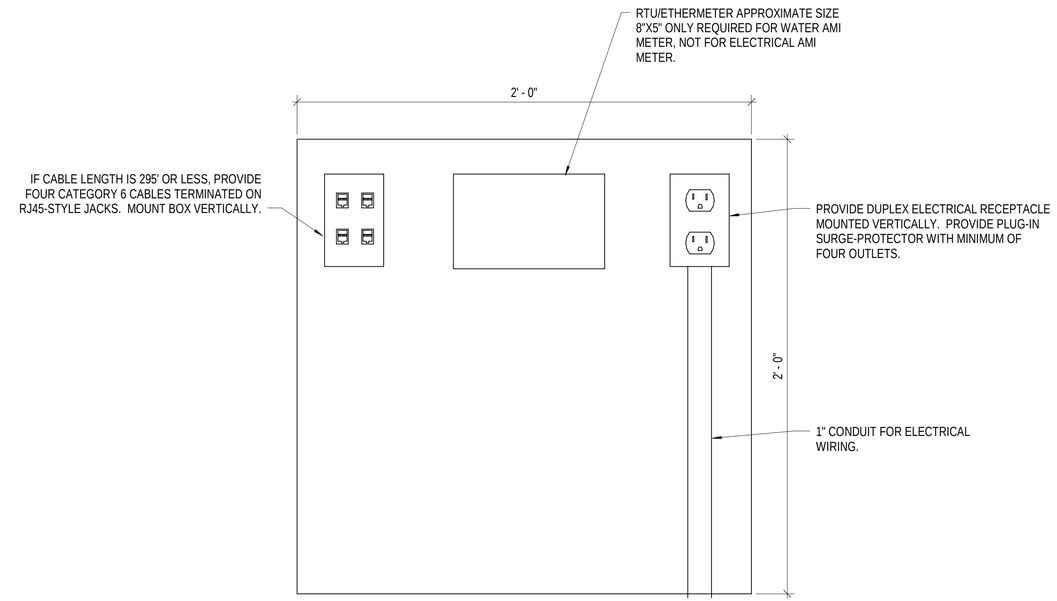

C3 SMART GRID AMI METER ENCLOSURE - CAT 6 CABLING
NTS

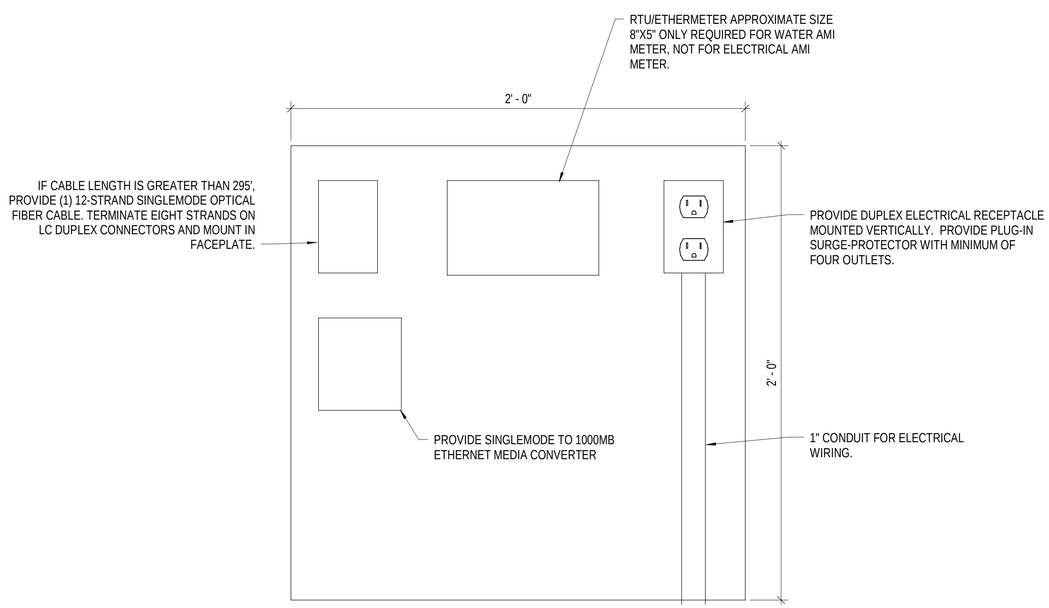

A1 SMART GRID AMI METER ENCLOSURE - FIBER CABLING
NTS

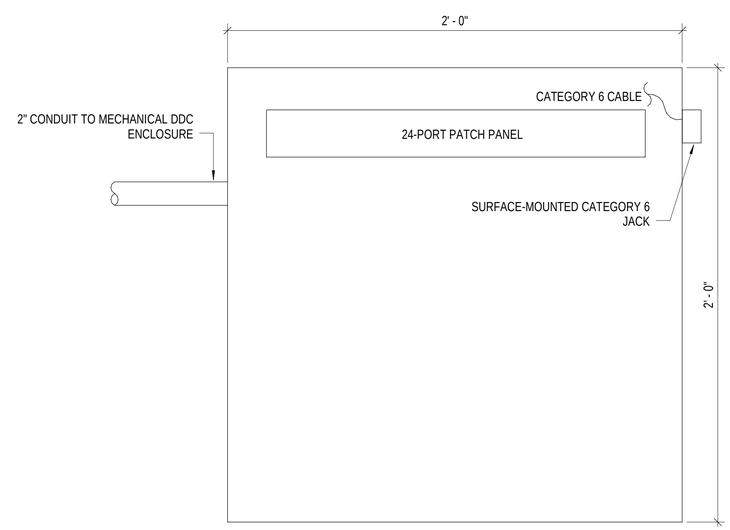

A3 SMART GRID DDC CABLING ENCLOSURE
NTS

SYM	DESCRIPTION	DATE	APPR

NAVFAC

REGISTERED COMMUNICATIONS DISTRIBUTION DESIGNER
6123180085
Bicsi
Rene Rubio
BICSI ID #112613
EXPIRES 12-31-26
RCDD
SEAL

Jacobs
1100 NORTH GLEBE ROAD
SUITE 500
ARLINGTON, VIRGINIA 22201
571.218.1000
FAX: 571.218.1600
A/E INFO

APPROVED
DATE SIGNED: 05-27-25
FOR COMMANDER NAVFAC
ACTIVITY
APPROVED BY LCDR ELIZABETH OLOKODE NAVFAC NLON FEAD DIRECTOR NEW LONDON, GROTON, CT
SATISFACTORY TO DATE 05/27/2025

DES RR	DRW RR	CHK SA
PM/DM		SDS / RSF
BRANCH MANAGER		WRB
CHIEF ENG/ARCH		JWJ
FIRE PROTECTION		HPN

DEPARTMENT OF THE NAVY
NAVAL FACILITIES ENGINEERING SYSTEMS COMMAND
MID-ATLANTIC
NAVAL FACILITIES ENGINEERING SYSTEMS COMMAND - MID-ATLANTIC
NAVAL STATION - NORFOLK, VA
NAVAL SUBMARINE BASE NEW LONDON
GROTON, CONNECTICUT
P-1102 WEAPONS MAGAZINE & ORDNANCE OPERATIONS FACILITY
OPERATIONS
TELECOMMUNICATIONS DETAILS

SCALE: AS NOTED
EPROJECT NO.: 1667770
CONSTR. CONTR. NO.
NAVFAC DRAWING NO. 12894069
SHEET 119 OF 140
T-510

6/20/2025 1:11:04 PM T-510
\\Qc1vs01\edgp\PDZE1620\TELE\BLDG-1667770-T-BIM_v21.rvt

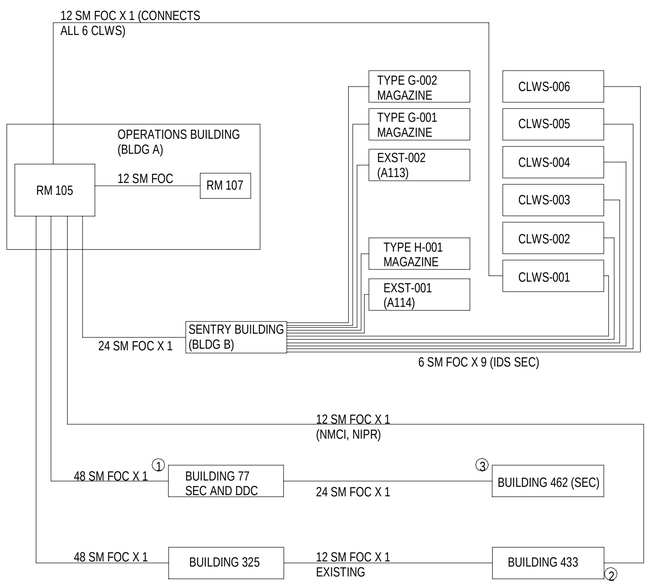

NOTES:

① FOC CFCI, PATCH CORDS ARE CFOI BY BASE IT

② COORDINATE DESIGN WITH LEIDOS TO ENSURE ACCESS TO THE BUILDING FOR FOC TERMINATION IN THE TEF. DESIGN MUST COORDINATE WTIH LEIDOS FOR UTILIZATION OF EXISTING FIBER WITH NEW FIBER TO SUPPORT THE OPERATIONS BUILDING (BLDG A)

③ PROVIDE PATCH CORDS ONLY. ACTUAL PATCHING BY BASE IT

A1 FIBER OPTIC ONE LINE DIAGRAM (NETWORK AND SECURITY)

NTS

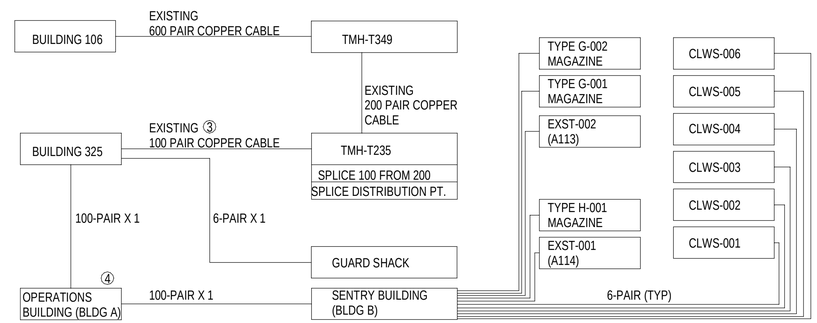

NOTE ③

EXISTING AERIAL 100-PAIR COPPER. PROVIDE UNDERGROUND DUCTBANK AND 100-PAIR. TERMINATE THE REPLACEMENT 100-PAIR CABLE ADJACENT TO THE EXISTING AERIAL 100-PAIR CABLE. COORDINATE WITH BCO FOR CUTOVER. WHEN REPLACEMENT 100-PAIR CABLE IS OPERATIONAL THEN DEMO AERIAL PLANT FROM BUILDING 325 TO MH-T235.

NOTE ④

IDS CABLING CONNECTS TO THE PANEL AND SIGNAL OUT IS CONVEYED VIA FIBER OPTIC CABLING OUT TO BUILDING 462.

A3 COPPER ONE LINE DIAGRAM - VOICE

NTS

SYM	DESCRIPTION	DATE	APPR

REGISTERED COMMUNICATIONS DISTRIBUTION DESIGNER 61231B0B5 Bicsi Rene Rubio BICSI ID #112613 EXPIRES 12-31-26 RCDD SEAL

Jacobs
1100 NORTH GLEBE ROAD
SUITE 500
ARLINGTON, VIRGINIA 22201
571.218.1000
FAX: 571.218.1600

A/E INFO

APPROVED

FOR COMMANDER NAVFAC

ACTIVITY: APPROVED BY LCDR ELIZABETH OLOKODE NAVFAC NLON FEAD DIRECTOR NEW LONDON, GROTON, CT

SATISFACTORY TO DATE 05/27/2025

DES	RR	DRW	RR	CHK	SA

PMDM	SDS / RSF
BRANCH MANAGER	WRB
CHIEF ENGIARCH	JWJ
FIRE PROTECTION	HPN

DEPARTMENT OF THE NAVY
NAVAL FACILITIES ENGINEERING SYSTEMS COMMAND - MID-ATLANTIC
NAVAL FACILITIES ENGINEERING SYSTEMS COMMAND
MID-ATLANTIC
NAVAL STATION - NORFOLK, VA
NAVAL SUBMARINE BASE NEW LONDON
GROTON, CONNECTICUT
P-1102 WEAPONS MAGAZINE & ORDNANCE OPERATIONS FACILITY
OPERATIONS
TELECOMMUNICATIONS RISER DIAGRAMS

SCALE: AS NOTED

EPROJECT NO.: 1667770

CONSTR. CONTR. NO.

NAVFAC DRAWING NO. 12894070

SHEET 120 OF 140

T-601

6/20/2025 1:11:11 PM T-601
\\bl-1vs01\ldsjpf\OZE162BTE\ELEB\LDG-1667770-T-BIM_v21.rvt

CABLE INFORMATION		FROM					TO				
QUANTITY	CABLE DESCRIPTION	BLDG	ROOM	ROW	CABINET / RACK	PATCH PANEL	BLDG SPACE	ROOM	ROW	CABINET / RACK	PATCH PANEL
(1)	12 SM (OS1) 250UM DIELECTRIC FOC (NMCI, NIPR, CLASS)	OPERATIONS BUILDING (BLDG A)	TR 105	N/A	CABINET 1	FDU	BLDG 433	SERVER RM	N/A	TBD	FDU
(1)	24 SM (OS1) 250UM DIELECTRIC FOC	OPERATIONS BUILDING (BLDG A)	TR 105	N/A	CABINET 1	FDU	SENTRY BUILDING (BUILDING B)	ELECTRICAL ROOM	N/A	TBD	FDU
(1)	48 SM (0S1) 250UM DIELECTRIC FOC (SEC, DDC)	OPERATIONS BUILDING (BLDG A)	TR 105	N/A	CABINET 1	FDU	BLDG 77	TELECOM RM	N/A	TBD	FDU
(1)	48 SM (OS1) 250UM DIELECTRIC FOC	OPERATIONS BUILDING (BLDG A)	TR 105	N/A	CABINET 1	FDU	BLDG 325	TMH10	N/A	N/A	SPLICE IN MH
(1)	6 SM (OS1) 250UM DIELECTRIC FOC	SENTRY BUILDING (BLDG B)	ELECTRICAL ROOM	N/A	CABINET 1	FDU	TYPE G 001 MAGAZINE	NEMA ENCLOSURE	N/A	WALL	WDU
(1)	6 SM (OS1) 250UM DIELECTRIC FOC	SENTRY BUILDING (BLDG B)	ELECTRICAL ROOM	N/A	CABINET 1	FDU	TYPE G 002 MAGAZINE	NEMA ENCLOSURE	N/A	WALL	WDU
(1)	6 SM (OS1) 250UM DIELECTRIC FOC	SENTRY BUILDING (BLDG B)	ELECTRICAL ROOM	N/A	CABINET 1	FDU	TYPE H 001 MAGAZINE	NEMA ENCLOSURE	N/A	WALL	WDU
(1)	6 SM (OS1) 250UM DIELECTRIC FOC	SENTRY BUILDING (BLDG B)	ELECTRICAL ROOM	N/A	CABINET 1	FDU	CLWS-001	NEMA ENCLOSURE	N/A	WALL	WDU
(1)	6 SM (OS1) 250UM DIELECTRIC FOC	SENTRY BUILDING (BLDG B)	ELECTRICAL ROOM	N/A	CABINET 1	FDU	CLWS-002	NEMA ENCLOSURE	N/A	WALL	WDU
(1)	6 SM (OS1) 250UM DIELECTRIC FOC	SENTRY BUILDING (BLDG B)	ELECTRICAL ROOM	N/A	CABINET 1	FDU	CLWS-003	NEMA ENCLOSURE	N/A	WALL	WDU
(1)	6 SM (OS1) 250UM DIELECTRIC FOC	SENTRY BUILDING (BLDG B)	ELECTRICAL ROOM	N/A	CABINET 1	FDU	CLWS-004	NEMA ENCLOSURE	N/A	WALL	WDU
(1)	6 SM (OS1) 250UM DIELECTRIC FOC	SENTRY BUILDING (BLDG B)	ELECTRICAL ROOM	N/A	CABINET 1	FDU	CLWS-005	NEMA ENCLOSURE	N/A	WALL	WDU
(1)	6 SM (OS1) 250UM DIELECTRIC FOC	SENTRY BUILDING (BLDG B)	ELECTRICAL ROOM	N/A	CABINET 1	FDU	CLWS-006	NEMA ENCLOSURE	N/A	WALL	WDU
(1)	12 SM (OS1) 250UM DIELECTRIC FOC (NMCI, NIPR, CLASS)	OPERATIONS BUILDING (BLDG A)	TR 105	N/A	CABINET 1	FDU	CLWS-001	NEMA ENCLOSURE	N/A	WALL	WDU
(1)	100 PAIR OSP COPPER CABLE (VOICE/SECURITY)	OPERATIONS BUILDING (BLDG A)	TR 105	N/A	WALL	PROTECTIVE ENTRANCE TERMINAL (PET)	BLDG 325	TMH10	N/A	N/A	SPLICE IN MH
(1)	100 PAIR OSP COPPER CABLE (VOICE/SECURITY)	OPERATIONS BUILDING (BLDG A)	TR 105	N/A	WALL	PROTECTIVE ENTRANCE TERMINAL (PET)	SENTRY BUILDING (BUILDING B)	ELECTRICAL ROOM	N/A	WALL	PROTECTIVE ENTRANCE TERMINAL (PET)
(1)	6 PAIR OSP COPPER CABLE (VOICE/SECURITY)	BUILDING 325	ELECTRICAL ROOM	N/A	WALL	PROTECTIVE ENTRANCE TERMINAL (PET)	GUARD SHACK	ELECTRICAL ROOM	N/A	WALL	PROTECTIVE ENTRANCE TERMINAL (PET)
(1)	6 PAIR OSP COPPER CABLE (VOICE/SECURITY)	SENTRY BUILDING (BLDG B)	ELECTRICAL ROOM	N/A	WALL	PROTECTIVE ENTRANCE TERMINAL (PET)	TYPE G 001 MAGAZINE	NEMA ENCLOSURE	N/A	WALL	PROTECTIVE ENTRANCE TERMINAL (PET)
(1)	6 PAIR OSP COPPER CABLE (VOICE/SECURITY)	SENTRY BUILDING (BLDG B)	ELECTRICAL ROOM	N/A	WALL	PROTECTIVE ENTRANCE TERMINAL (PET)	TYPE G 002 MAGAZINE	NEMA ENCLOSURE	N/A	WALL	PROTECTIVE ENTRANCE TERMINAL (PET)
(1)	6 PAIR OSP COPPER CABLE (VOICE/SECURITY)	SENTRY BUILDING (BLDG B)	ELECTRICAL ROOM	N/A	WALL	PROTECTIVE ENTRANCE TERMINAL (PET)	EXST-002 (A113) MAGAZINE	NEMA ENCLOSURE	N/A	WALL	PROTECTIVE ENTRANCE TERMINAL (PET)
(1)	6 PAIR OSP COPPER CABLE (VOICE/SECURITY)	SENTRY BUILDING (BLDG B)	ELECTRICAL ROOM	N/A	WALL	PROTECTIVE ENTRANCE TERMINAL (PET)	CLWS-001	NEMA ENCLOSURE	N/A	WALL	PROTECTIVE ENTRANCE TERMINAL (PET)
(1)	6 PAIR OSP COPPER CABLE (VOICE/SECURITY)	SENTRY BUILDING (BLDG B)	ELECTRICAL ROOM	N/A	WALL	PROTECTIVE ENTRANCE TERMINAL (PET)	CLWS-002	NEMA ENCLOSURE	N/A	WALL	PROTECTIVE ENTRANCE TERMINAL (PET)
(1)	6 PAIR OSP COPPER CABLE (VOICE/SECURITY)	SENTRY BUILDING (BLDG B)	ELECTRICAL ROOM	N/A	WALL	PROTECTIVE ENTRANCE TERMINAL (PET)	CLWS-003	NEMA ENCLOSURE	N/A	WALL	PROTECTIVE ENTRANCE TERMINAL (PET)
(1)	6 PAIR OSP COPPER CABLE (VOICE/SECURITY)	SENTRY BUILDING (BLDG B)	ELECTRICAL ROOM	N/A	WALL	PROTECTIVE ENTRANCE TERMINAL (PET)	CLWS-004	NEMA ENCLOSURE	N/A	WALL	PROTECTIVE ENTRANCE TERMINAL (PET)
(1)	6 PAIR OSP COPPER CABLE (VOICE/SECURITY)	SENTRY BUILDING (BLDG B)	ELECTRICAL ROOM	N/A	WALL	PROTECTIVE ENTRANCE TERMINAL (PET)	CLWS-005	NEMA ENCLOSURE	N/A	WALL	PROTECTIVE ENTRANCE TERMINAL (PET)
(1)	6 PAIR OSP COPPER CABLE (VOICE/SECURITY)	SENTRY BUILDING (BLDG B)	ELECTRICAL ROOM	N/A	WALL	PROTECTIVE ENTRANCE TERMINAL (PET)	CLWS-006	NEMA ENCLOSURE	N/A	WALL	PROTECTIVE ENTRANCE TERMINAL (PET)
(1)	6 PAIR OSP COPPER CABLE (VOICE/SECURITY)	SENTRY BUILDING (BLDG B)	ELECTRICAL ROOM	N/A	WALL	PROTECTIVE ENTRANCE TERMINAL (PET)	TYPE H 001 MAGAZINE	NEMA ENCLOSURE	N/A	WALL	PROTECTIVE ENTRANCE TERMINAL (PET)
(1)	6 PAIR OSP COPPER CABLE (VOICE/SECURITY)	SENTRY BUILDING (BLDG B)	ELECTRICAL ROOM	N/A	WALL	PROTECTIVE ENTRANCE TERMINAL (PET)	EXST-001 (A114) MAGAZINE	NEMA ENCLOSURE	N/A	WALL	PROTECTIVE ENTRANCE TERMINAL (PET)
(1)	6 SM (OS1) 250UM DIELECTRIC FOC	SENTRY BUILDING (BLDG B)	ELECTRICAL ROOM	N/A	CABINET 1	FDU	EXST-001 (A114) MAGAZINE	NEMA ENCLOSURE	N/A	WALL	WDU
(1)	6 SM (OS1) 250UM DIELECTRIC FOC	SENTRY BUILDING (BLDG B)	ELECTRICAL ROOM	N/A	CABINET 1	FDU	EXST-002 (A113) MAGAZINE	NEMA ENCLOSURE	N/A	WALL	WDU

SYM	DESCRIPTION	DATE	APPR

NAVFAC

REGISTERED COMMUNICATIONS DISTRIBUTION DESIGNER
6/23/2025
Bicsi
Rene Rubio
BICSI ID #112613
EXPIRES 12-31-26
RCDD
SEAL

Jacobs
1100 NORTH GLEBE ROAD
SUITE 500
ARLINGTON, VIRGINIA 22201
571.218.1000
FAX: 571.218.1600

A/E INFO

APPROVED
FOR COMMANDER NAVFAC
ACTIVITY
APPROVED BY LCDR ELIZABETH OLOKODE NAVFAC NLON FEAD DIRECTOR NEW LONDON, GROTON, CT
SATISFACTORY TO DATE 05/27/2025

DES RR	DRW RR	CHK SA	
PM/DM	SDS / RSF		
BRANCH MANAGER	WRB		
CHIEF ENG/ARCH	JWJ		
FIRE PROTECTION	HPN		

DEPARTMENT OF THE NAVY
NAVAL FACILITIES ENGINEERING SYSTEMS COMMAND
MID-ATLANTIC
NAVAL FACILITIES ENGINEERING SYSTEMS COMMAND - MID-ATLANTIC
NAVAL STATION - NORFOLK, VA
NAVAL SUBMARINE BASE NEW LONDON
GROTON, CONNECTICUT
P-1102 WEAPONS MAGAZINE & ORDNANCE OPERATIONS FACILITY
OPERATIONS
TELECOMMUNICATIONS SCHEDULES

SCALE: AS NOTED
EPROJECT NO.: 1667770
CONSTR. CONTR. NO.
NAVFAC DRAWING NO.
12894071
SHEET 121 OF 140
T-602

6/20/2025 1:11:17 PM T-602
\\AZ1-vs01\Redp\PDZE1628\TELE\BLDG-1667770-T-BIM_v21.rvt

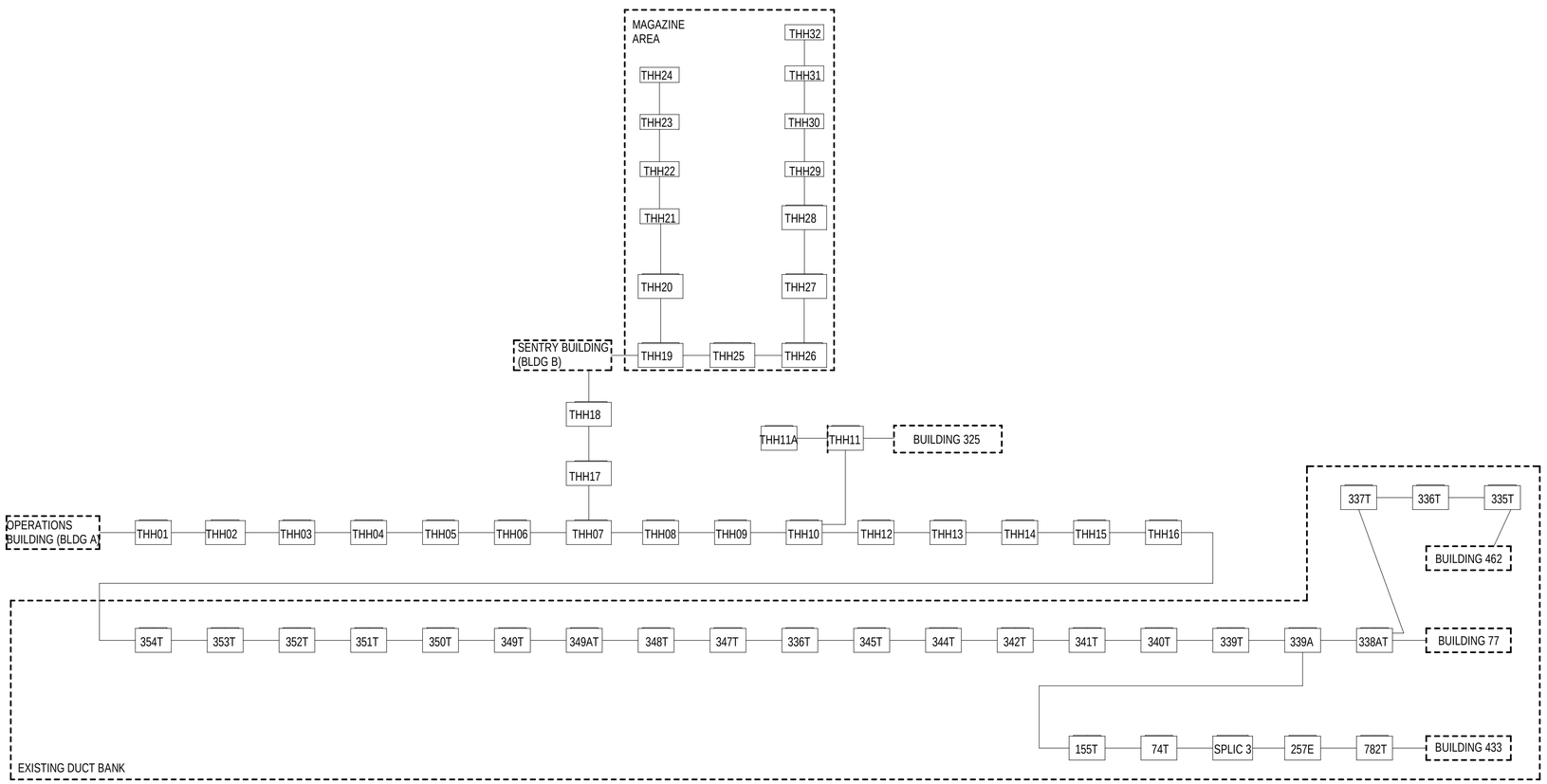

A1 ONE LINE OSP RISER

NTS

SYM	DESCRIPTION	DATE	APPR

NAVFAC

REGISTERED COMMUNICATIONS DISTRIBUTION DESIGNER
6128310085
Bicsi
Rene Rubio
BICSI ID #112613
EXPIRES 12-31-26
RCDD
SEAL

Jacobs
1100 NORTH GLEBE ROAD
SUITE 500
ARLINGTON, VIRGINIA 22201
571.218.1000
FAX: 571.218.1600

A/E INFO

APPROVED

FOR COMMANDER NAVFAC

ACTIVITY:
APPROVED BY LCDR ELIZABETH OLOKODE NAVFAC NLON FEAD DIRECTOR NEW LONDON, GROTON, CT

SATISFACTORY TO DATE 05/27/2025

DES	RR	DRW	RR	CHK	SA

PM/DM	SDS / RSF
BRANCH MANAGER	WRB
CHIEF ENG/ARCH	JWJ
FIRE PROTECTION	HPN

DEPARTMENT OF THE NAVY
NAVAL FACILITIES ENGINEERING SYSTEMS COMMAND
MID-ATLANTIC

NAVAL FACILITIES ENGINEERING SYSTEMS COMMAND - MID-ATLANTIC
NAVAL STATION - NORFOLK, VA

NAVAL SUBMARINE BASE NEW LONDON
GROTON, CONNECTICUT

P-1102 WEAPONS MAGAZINE & ORDNANCE OPERATIONS FACILITY
OPERATIONS

ONE LINE OSP RISER DIAGRAM

SCALE: AS NOTED

EPROJECT NO.: 1667770

CONSTR. CONTR. NO.

NAVFAC DRAWING NO.
12894072

SHEET 122 OF 140

T-603

6/20/2025 1:11:21 PM T-603
\\uc1vs01\eupp\P-D2E1628\TELE\BLDG-1667770-T-BIM_v21.rvt

AUDIO VISUAL SYMBOLS

WALL MOUNTED	CEILING MOUNTED	FLOOR MOUNTED	
S: HT, REQ, SCHED ID, LOC ID	S: REQ, SCHED ID, LOC ID	S: REQ, SCHED ID, LOC ID	SPEAKER
MIC: HT, REQ, SCHED ID, LOC ID	MIC: REQ, SCHED ID, LOC ID	MIC: REQ, SCHED ID, LOC ID	MICROPHONE
J: HT, REQ, SCHED ID, LOC ID	J: REQ, SCHED ID, LOC ID	J: REQ, SCHED ID, LOC ID	A/V JUNCTION BOX
HT, REQ	CB: HT, MOUNT, SCHED ID	FB: HT, MOUNT, SCHED ID	GROUPED LOCATION/ENCLOSURE CB - CEILING BOX FB - FLOOR BOX PT - POKE-THRU
		ER	A/V EQUIPMENT RACK
		TP	TOUCH PANEL
AV X	AV X	AV X	AUDIO VISUAL OUTLET X = BOX TYPE XG = # OF GANGS
WALL MOUNTED	CEILING MOUNTED	FLOOR MOUNTED	

HT - MOUNTING HEIGHT TO CENTER
MOUNT - MOUNTING STYLE (FLUSH, SURFACE, ETC)
REQ - OPTIONAL, REQUIREMENT TYPE (E.G. 1 GANG, 2 GANG, ETC)
SCHED ID - UNIQUE INCREMENTAL NUMERIC VALUE AMONG SIMILAR DEVICE TYPE
LOC ID - OPTIONAL, INDICATES LOCATION

TYPE	MANUFACTURER	MODEL	DETAIL
A	CHIEF	PAC526	N/A
B	FSR	PWB-100	A3/A_TA501
C	FLOOR BOX	COORDINATE WITH ELECTRICAL	

ABBREVIATIONS & ACRONYMS

ABBREVIATION & ACRONYM	DESCRIPTION
AC	ALTERNATING CURRENT
ADD	ADDENDUM
AFC	ABOVE FINISHED CEILING
AFF	ABOVE FINISHED FLOOR
ALT	ALTERNATE
AV	AUDIO VISUAL
BFC	BELOW FINISHED CEILING
BTM	BOTTOM
C	CONDUIT
CL	CENTERLINE
CLG	CEILING
CONF	CONFERENCE
D	DATA
DB	DECIBEL
DC	DIRECT CURRENT
DIA	DIAMETER
DIM	DIMENSION
DR	DOOR
DWG	DRAWING
EC	ELECTRICAL CONTRACTOR
ELEC	ELECTRICAL
ELEV	ELEVATION
ENC	ENCLOSURE
EQ	EQUAL
EQUIP	EQUIPMENT
EXG	EXISTING
EXT	EXTERIOR
FB	FLOOR BOX
FLR	FLOOR
FO	FINISH OPENING
FUT	FUTURE
GC	GENERAL CONTRACTOR
HD	HIGH-DEFINITION
HOR	HORIZONTAL
HT	HEIGHT
INCL	INCLUDED
INT	INTERIOR
IR	INFRARED
J	JUNCTION BOX
LBL	LABEL
LVC	LOW VOLTAGE CONTROLLER

ABBREVIATION & ACRONYM	DESCRIPTION
MAX	MAXIMUM
MECH	MECHANICAL
MFR	MANUFACTURER
MIN	MINIMUM
MISC	MISCELLANEOUS
MULL	MULLION
NA	NOT APPLICABLE
NIC	NOT IN CONTRACT
NTS	NOT TO SCALE
OFE	OWNER FURNISHED EQUIPMENT
OPG	OPENING
OH	OVERHEAD
PED	PEDESTAL
POTS	PLAIN OLD TELEPHONE SERVICE
PSTN	PUBLIC SWITCHED TELEPHONE NETWORK
PT	POKE-THRU
REF	REFERENCE
REV	REVISION
RF	RADIO FREQUENCY
RM	ROOM
RO	ROUGH OPENING
SCH	SCHEDULE
SEC	SECTION
SIM	SIMILAR
SPEC	SPECIFICATION
S	LOUDSPEAKER
STD	STANDARD
SUS	SUSPENDED
SW	SWITCH
SYS	SYSTEM
TD	THROW DISTANCE
TEL	TELEPHONE
TEL/COM	TELECOMMUNICATIONS
TP	TOUCH PANEL
TV	TELEVISION
TYP	TYPICAL
V	VOLTS
VTC	VIDEO CONFERENCING
W	WATTS
W/O	WITHOUT

ELECTRICAL NOTES

1	ELECTRICAL RECEPTACLES FOR AUDIO VISUAL EQUIPMENT TO SHARE THE SAME PHASE.
2	TELEPHONE, NETWORK, AND ELECTRICAL FACILITY REQUIREMENTS INDICATED ON THESE DRAWINGS ARE FOR COORDINATION PURPOSES ONLY.
3	ELECTRICAL REQUIREMENTS INDICATED ON THESE DRAWINGS ARE FOR AUDIO VISUAL PURPOSES ONLY.
4	REFER TO ELECTRICAL DRAWINGS FOR ALL POWER CIRCUITRY.
5	FINAL LOCATION OF ALL FLOOR BOXES/POKE-THRU'S TO BE VERIFIED IN FIELD WITH ARCHITECT PRIOR TO INSTALLATION.
6	COORDINATE FINAL LOCATION OF AUDIO VISUAL JUNCTION BOXES WITH WALL TREATMENTS AND SURFACES.

GENERAL NOTES

1	CABLES TO BE CONTINUOUS WITHOUT SPLICING, UNLESS OTHERWISE NOTED.
2	AUDIO VISUAL DEVICES TO BE ASSEMBLED AND INSTALLED IN ACCORDANCE TO MANUFACTURER INSTRUCTIONS.

CONDUIT GUIDELINES

THIS SECTION DEFINES THE DIFFERENT LEVELS AND TYPE OF AUDIO AND VIDEO SIGNALS THAT WILL BE A PART OF THE COMPLETE SOUND, COMMUNICATIONS, AND VIDEO SYSTEM. IT IS IMPORTANT THAT EACH GROUP IS INSTALLED IN CONDUIT DISCREET FROM OTHER GROUP LEVELS. DO NOT COMBINE DIFFERENT CABLES IN COMMON JUNCTION BOXES/WIRE RACEWAYS. ANY WIRING THAT IS CLASSIFIED WITHIN A GROUP CAN BE COMBINED IN A CONDUIT CARRYING OTHER WIRING THAT IS IN THE SAME GROUP. WHEN A COMBINATION PANEL IS SPECIFIED THE CONDUITS WILL ENTER INTO THE BOX WITH THE INTENT OF MAINTAINING THE SEPARATION AS MUCH AS POSSIBLE. IN BRINGING THE CONDUITS INTO THE BOX THE METAL WALLS OF THE BOX WILL SUPPLY SOME ADDITIONAL SHIELDING. THE DIFFERENT LEVELS OF AUDIO AND VIDEO SIGNALS ARE DEFINED AS FOLLOWS:

GROUP A - MICROPHONE LEVEL WIRING (0 TO .01V)
GROUP B - LINE LEVEL WIRING (.01V TO 10V)
GROUP C - LOUDSPEAKER AND CONTROL WIRING (10V TO 70V)
GROUP D - TELEPHONE, VIDEO, CONTROL, AND DIGITAL SYSTEMS
GROUP E - FIBER OPTIC AND DIELECTRIC SIGNAL WIRING

SEPARATION DISTANCES

	GROUP A	GROUP B	GROUP C	GROUP D	GROUP E
GROUP A	ADJACENT	150mm	300mm	300mm	ADJACENT
GROUP B	150mm	ADJACENT	300mm	150mm	ADJACENT
GROUP C	300mm	300mm	ADJACENT	150mm	ADJACENT
GROUP D	300mm	150mm	150mm	ADJACENT	ADJACENT
GROUP E	ADJACENT	ADJACENT	ADJACENT	ADJACENT	ADJACENT
DIMMER CONTROLLED LIGHTING	610mm	300mm	150mm	300mm	ADJACENT
SCR CONTROLLED DEVICES	920mm	300mm	150mm	150mm	ADJACENT
480V OR 208V FEEDER CIRCUITS	1830mm	1830mm	1530mm	1830mm	300mm
120V OR 208V BRANCH CIRCUITS	1220mm	1220mm	920mm	1220mm	300mm
ALL OTHERS (PLUMBING, HEAT, ETC)	300mm	300mm	300mm	300mm	300mm

1 REFER TO ABOVE TABLE FOR ALL SEPARATION DISTANCES. ALL UNDER SLAB CONDUIT MUST BE RIGID GALVANIZED STEEL CONDUIT AND COATED WITH A WATERPROOF SEAL. ALL ABOVE SLAB CONDUITS MUST BE EMT, UNLESS OTHERWISE NOTED.

2 ALL CONTINUOUS CONDUIT MUST NOT EXCEED 180 DEGREES OF TOTAL BENDS WITHOUT AN ACCESSIBLE PULL BOX AFTER EACH 180 DEGREES OF CUMULATIVE BENDS ALONG THE TOTAL CONDUIT RUN.

3 MAINTAIN MINIMUM CONDUIT SEPARATION BETWEEN CONDUITS CARRYING WIRE OF DIFFERENT GROUPS. RUN NO MORE THAN ONE GROUP IN A SINGLE CONDUIT WHEN DIFFERENT SIGNALS EXIST ON A WALL PANEL.

4 TO MINIMIZE SIGNAL INTERFERENCE, THE CONDUIT PATHS MUST BE DESIGNED TO CROSS AT 90 DEGREES AND STAY CLOSE IN PROXIMITY AT EACH DIFFERENT GROUPS OF CONDUITS. FOR CLASSIFIED SEPARATION THE DISTANCE CAN BE REDUCED TO 50mm SEPARATION.

5 DO NOT ROUTE SOUND, COMMUNICATION, AND VIDEO NEAR POWER TRANSFORMERS, SCR DIMMERS, POWER CONTROL EQUIPMENT, HEAVY CURRENT SWITCHGEAR, FLUORESCENT BALLAST, MOTORS, OR ANY EQUIPMENT THAT MAY BE A SOURCE OF INTERFERENCE.

6 MINIMUM CONDUIT SIZE IS 1-INCH WITH PULL TAPE AND SIZED FOR 40% FILL OR LESS IF REQUIRED BY PREVAILING CODE. PROVIDE PULL BOXES TO MATCH THE PULL TENSIONS OF WIRING BEING INSTALLED. THE ELECTRICAL CONTRACTOR IS RESPONSIBLE FOR PROVIDING APPROPRIATE PULL TENSIONS AND LUBRICANT TO ENSURE THE CABLE INSULATION WILL NOT BE ABRADED OR CUT DURING INSTALLATION.

7 PROVIDE ADDITIONAL SEPARATION BETWEEN SOUND, COMMUNICATION, AND VIDEO CONDUITS FROM HEAVY CURRENT DEMAND IN ADJACENT CONDUITS OR WHERE THERE IS A LONG PARALLEL CONDUIT RUN.

8 MECHANICALLY AND ELECTRICALLY CONNECT SIGNAL CONDUITS TO BOXES AND CONNECT TO THE BUILDING GROUNDING SYSTEM.

9 ALL SYSTEMS WIRING WILL BE IN CONDUIT, UNLESS AUTHORIZED BY THE ARCHITECT AND APPROVED BY THE SOUND, COMMUNICATION, AND VIDEO DESIGNER.

10 SOUND, COMMUNICATION, AND VIDEO SYSTEM CONDUITS ENTERING EQUIPMENT RACKS WILL BE A DIELECTRICALLY INSULATED GROUND JOINT UNION TO ISOLATE THE CONDUIT SYSTEM FROM THE CHASSIS OF THE RACK.

11 BOND SOUND SYSTEM TECHNICAL GROUND TO THE METAL FRAME OF ALL EQUIPMENT RACKS AND BOND UNINSULATED GROUND BUS BAR OR GROUNDING LUGS TO ONE CENTRAL EQUIPMENT RACK LUG, WHICH WILL BE THE ONLY CONNECTION TO THE SOUND SYSTEM TECHNICAL GROUND CONDUCTOR. THE GANGING OF RACKS TOGETHER WITH MECHANICAL FASTENERS IS NOT AN ACCEPTABLE METHOD OF BONDING THE SOUND SYSTEM TECHNICAL GROUND BETWEEN RACKS.

12 INSULATE RACK FRAMES FROM THE FLOOR AND LOCATE TO PREVENT CONTACT WITH ANY SAFETY GROUNDED ITEMS DURING OPERATION.

SYM	DESCRIPTION	DATE	APPR

NAVFAC

Certified Technology Specialist-Design CTS-D 6/23/2025 Steven J Yost #2386776 Expires 2025-06-30 SEAL

Jacobs
1100 NORTH GLEBE ROAD
SUITE 500
ARLINGTON, VIRGINIA 22201
571.218.1000
FAX: 571.218.1600

A/E INFO

APPROVED
FOR COMMANDER NAVFAC

ACTIVITY
APPROVED BY LCDR ELIZABETH OLOKODE NAVFAC NLON FEAD DIRECTOR NEW LONDON, GROTON, CT

SATISFACTORY TO DATE 05/27/2025

DES	SJY	DRW	TLO	CHK	JFH

PM/DM SDS / RSF
BRANCH MANAGER WRB
CHIEF ENG/ARCH JWJ
FIRE PROTECTION HPN

DEPARTMENT OF THE NAVY
NAVAL FACILITIES ENGINEERING SYSTEMS COMMAND - MID-ATLANTIC
MID-ATLANTIC
NAVAL FACILITIES ENGINEERING SYSTEMS COMMAND
NAVAL STATION - NORFOLK, VA
NAVAL SUBMARINE BASE NEW LONDON
GROTON, CONNECTICUT
P-1102 WEAPONS MAGAZINE & ORDNANCE OPERATIONS FACILITY
OPERATIONS
AUDIO VISUAL SYMBOLS, LEGEND, ABBREVIATIONS, AND NOTES

SCALE: AS NOTED
EPROJECT NO.: 1667770
CONSTR. CONTR. NO.
NAVFAC DRAWING NO. 12894073
SHEET 123 OF 140

TA001

6/20/2025 1:13:00 PM TA001
\\bcl.local\Projects\PDZE1620\TELE\BLDG-1667770-T-BIM_v21.rvt

AUDIO VISUAL DISPLAY SCHEDULE

ROOM NUMBER	DISPLAY TYPE	DISPLAY SIZE	HEIGHT AFF
109	FPD-B	70"	4'-0"
126	FPD-B	70"	5'-6"
127	FPD-A	60"	4'-0"
128	FPD-A	60"	4'-0"
129	FPD-A	60"	4'-0"
130	FPD-A	60"	4'-0"
131	FPD-E	86"	4'-0"
131	FPD-E	86"	4'-0"

SYM	DESCRIPTION	DATE	APPR

NAVFAC

Certified Technology Specialist-Design
6/23/2025
CTS-D
Steven J Frost
#2336776
Expires
2026/06/30
AVIXA
SEAL

Jacobs
1100 NORTH GLEBE ROAD
SUITE 500
ARLINGTON, VIRGINIA 22201
571.218.1000
FAX: 571.218.1600

A/E INFO

APPROVED

FOR COMMANDER NAVFAC

ACTIVITY
APPROVED BY LCDR ELIZABETH OLOKODE NAVFAC NLON FEAD DIRECTOR NEW LONDON, GROTON, CT

SATISFACTORY TO DATE 05/27/2025

DES SJY | DRW TLO | CHK JFH

PM/DM SDS / RSF

BRANCH MANAGER WRB

CHIEF ENG/ARCH JWJ

FIRE PROTECTION HPN

DEPARTMENT OF THE NAVY
NAVAL FACILITIES ENGINEERING SYSTEMS COMMAND
NAVAL FACILITIES ENGINEERING SYSTEMS COMMAND - MID-ATLANTIC
MID-ATLANTIC
NAVAL STATION - NORFOLK, VA

NAVAL SUBMARINE BASE NEW LONDON
GROTON, CONNECTICUT
P-1102 WEAPONS MAGAZINE & ORDNANCE OPERATIONS FACILITY
OPERATIONS

AUDIO VISUAL DISPLAY SCHEDULE

SCALE: AS NOTED

EPROJECT NO.: 1667770

CONSTR. CONTR. NO.

NAVFAC DRAWING NO.
12894074

SHEET 124 OF 140

TA002

6/20/2025 1:13:07 PM TA002
\\bk-1vs01\Hdsp\FDZE1628\TELE\BLDG-1667770-T-BIM_v21.rvt

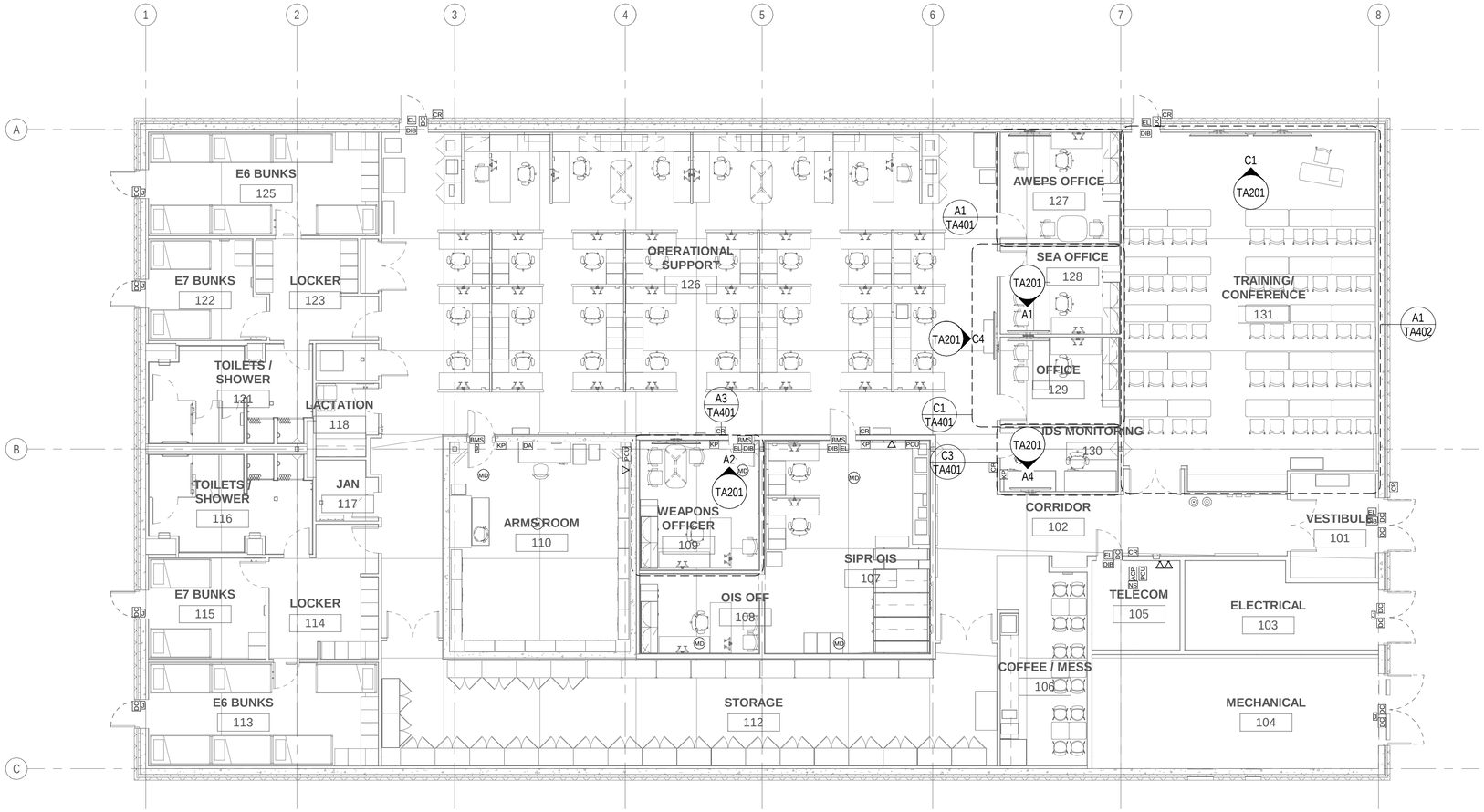

B1 OVERALL FIRST FLOOR AUDIO VISUAL PLAN

1/8" = 1'-0"

GENERAL SHEET NOTES

A. REFER TO SHEET TA001 FOR AUDIO VISUAL SYMBOLS AND ABBREVIATIONS.

SYM	DESCRIPTION	DATE	APPR

NAVFAC

Certified Technology Specialist-Design CTS-D 6/23/2025 Steven J Yost #2386776 Expires 2025-06-30 AVIXA SEAL

Jacobs
1100 NORTH GLEBE ROAD
SUITE 500
ARLINGTON, VIRGINIA 22201
571.218.1000
FAX: 571.218.1600

A/E INFO

APPROVED

FOR COMMANDER NAVFAC

ACTIVITY
APPROVED BY LCDR ELIZABETH OLOKODE NAVFAC NLON FEAD DIRECTOR NEW LONDON, GROTON, CT

SATISFACTORY TO DATE 05/27/2025

DES	SJY	DRW TLO	CHK JFH
PM/DM	SDS / RSF		
BRANCH MANAGER	WRB		
CHIEF ENG/ARCH	JWJ		
FIRE PROTECTION	HPN		

DEPARTMENT OF THE NAVY
NAVAL FACILITIES ENGINEERING SYSTEMS COMMAND
MID-ATLANTIC
NAVAL FACILITIES ENGINEERING SYSTEMS COMMAND - MID-ATLANTIC
NAVAL STATION - NORFOLK, VA
NAVAL SUBMARINE BASE NEW LONDON
GROTON, CONNECTICUT
P-1102 WEAPONS MAGAZINE & ORDNANCE OPERATIONS FACILITY
OPERATIONS
AUDIO VISUAL FLOOR PLAN

SCALE: AS NOTED
EPROJECT NO.: 1667770
CONSTR. CONTR. NO.
NAVFAC DRAWING NO. 12894075
SHEET 125 OF 140

TA101

0 4' 8' 16' 24'
1/8" = 1'-0"

PLAN NORTH

6/20/2025 1:13:17 PM
TA101
\\dc1vs01\Revit\PDZE\1628\TELE\BLDG-1667770-T-BIM_v21.rvt

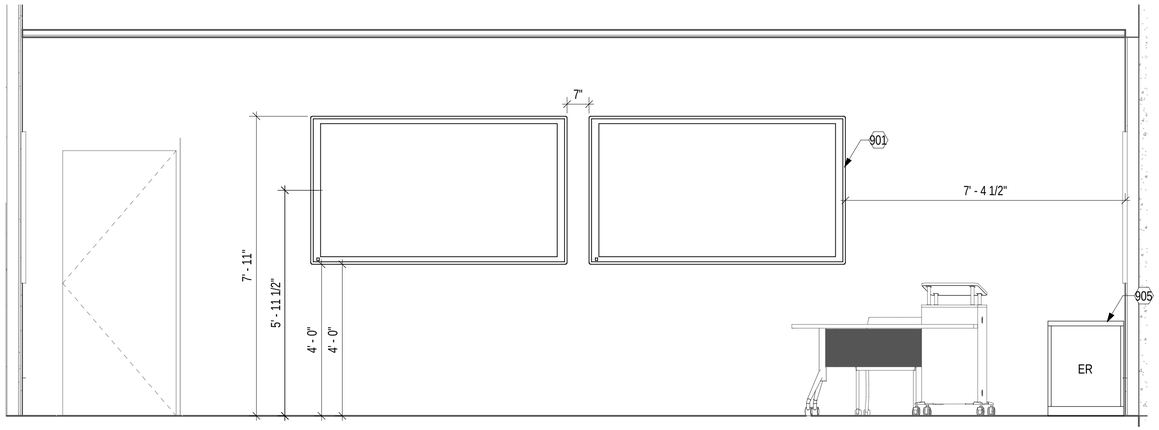

C1 DISPLAY ELEVATION - TRAINING/CONFERENCE 131
1/2" = 1'-0" (TA101)

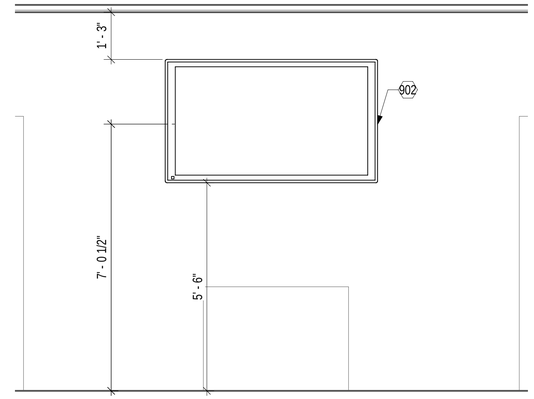

C4 DISPLAY ELEVATION - ROOM 126
1/2" = 1'-0" (TA101)

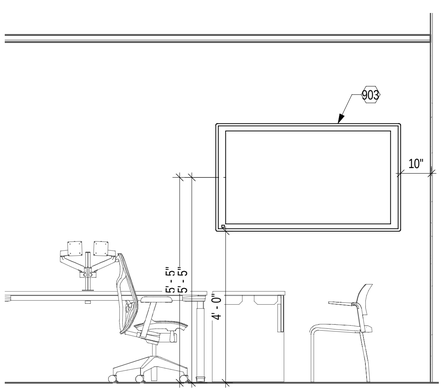

A1 DISPLAY ELEVATION - TYPICAL OFFICE
1/2" = 1'-0"

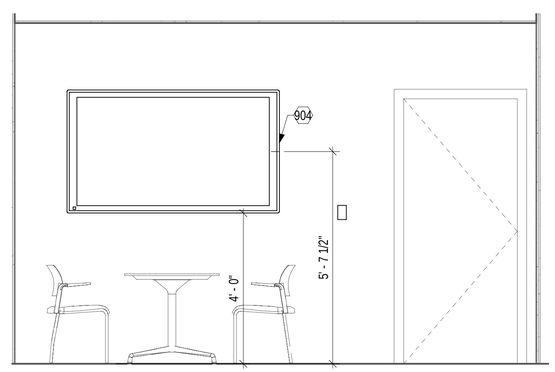

A2 DISPLAY ELEVATION - WEAPONS OFFICER
1/2" = 1'-0"

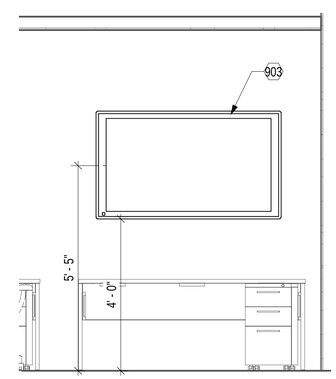

A4 DISPLAY ELEVATION - IDS MONITORING
1/2" = 1'-0" (TA101)

0 1' 2' 4' 6'
1/2" = 1'-0"

GENERAL SHEET NOTES

A REFER TO A_TA001 FOR SYMBOLS, ABBREVIATIONS AND GENERAL NOTES.

SHEET KEYNOTES

901 86" SMART DISPLAY WITH MOUNT AND BACKBOX. BOTTOM OF DISPLAY MOUNTED 48" A.F.F. SEE C1/A_TA501 FOR DETAIL.

902 70" DISPLAY WITH MOUNT AND OFFSET BACKBOX. BOTTOM OF DISPLAY MOUNTED AT 66" A.F.F. SEE C3/A_TA501 FOR DETAIL.

903 60" DISPLAY WITH MOUNT AND BACKBOX. BOTTOM OF DISPLAY MOUNTED AT 48" A.F.F. SEE C1/A_TA501 FOR DETAIL.

904 70" DISPLAY WITH MOUNT AND BACKBOX. BOTTOM OF DISPLAY MOUNTED AT 48" A.F.F. SEE C1/A_TA501 FOR DETAIL.

905 12 RU SPACE 27" DEEP AUDIO VISUAL EQUIPMENT RACK.

SYM	DESCRIPTION	DATE	APPR

NAVFAC

Certified Technology Specialist-Design
6/23/2025
CTS-D
Steven J Frost
#2386776
Expires
2025-06-30
AVIXA
SEAL

Jacobs
1100 NORTH GLEBE ROAD
SUITE 500
ARLINGTON, VIRGINIA 22201
571.218.1000
FAX: 571.218.1600

A/E INFO

APPROVED
FOR COMMANDER NAVFAC
ACTIVITY
APPROVED BY LCDR ELIZABETH OLOKODE NAVFAC NLON FEAD DIRECTOR NEW LONDON, GROTON, CT
SATISFACTORY TO DATE 05/27/2025

DES SJY	DRW TLO	CHK JFH	
PM/DM	SDS / RSF		
BRANCH MANAGER	WRB		
CHIEF ENG/ARCH	JWJ		
FIRE PROTECTION	HPN		

DEPARTMENT OF THE NAVY
NAVAL FACILITIES ENGINEERING SYSTEMS COMMAND
MID-ATLANTIC
NAVAL FACILITIES ENGINEERING SYSTEMS COMMAND - MID-ATLANTIC
NAVAL STATION - NORFOLK, VA
NAVAL SUBMARINE BASE NEW LONDON
GROTON, CONNECTICUT
P-1102 WEAPONS MAGAZINE & ORDNANCE OPERATIONS FACILITY
OPERATIONS
AUDIO VISUAL ELEVATIONS

SCALE: AS NOTED
EPROJECT NO.: 1667770
CONSTR. CONTR. NO.
NAVFAC DRAWING NO.
12894076
SHEET 126 OF 140
TA201

6/20/2025 11:23:29 PM TA201
\\bk1v901\hdsp\PROJECT\6281\ELE\BLDG-1667770-T-BIM_v21.rvt

GENERAL SHEET NOTES

A REFER TO A_TA001 FOR SYMBOLS, ABBREVIATIONS AND GENERAL NOTES.

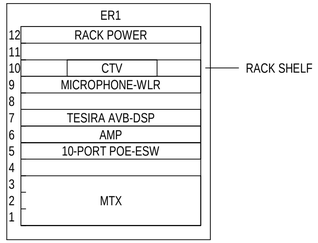

EQUIPMENT RACK

A1 AUDIO VISUAL RACK ELEVATION - TRAINING ROOM 131

NTS

SYM	DESCRIPTION	DATE	APPR

NAVFAC

Certified Technology Specialist-Design
6/23/2025
CTS-D
Steven J Frost
#2386776
Expires
2026/06/30
SEAL

Jacobs
1100 NORTH GLEBE ROAD
SUITE 500
ARLINGTON, VIRGINIA 22201
571.218.1000
FAX: 571.218.1600
A/E INFO

APPROVED

FOR COMMANDER NAVFAC

ACTIVITY
APPROVED BY LCDR ELIZABETH
OLOKODE NAVFAC NLON FEAD
DIRECTOR NEW LONDON, GROTON, CT

SATISFACTORY TO DATE 05/27/2025

DES SJY | DRW TLO | CHK JFH

PM/DM	SDS / RSF
BRANCH MANAGER	WRB
CHIEF ENG/ARCH	JWJ
FIRE PROTECTION	HPN

DEPARTMENT OF THE NAVY
NAVAL FACILITIES ENGINEERING SYSTEMS COMMAND
NAVAL FACILITIES ENGINEERING SYSTEMS COMMAND - MID-ATLANTIC
MID-ATLANTIC
NAVAL STATION - NORFOLK, VA
NAVAL SUBMARINE BASE NEW LONDON
GROTON, CONNECTICUT
P-1102 WEAPONS MAGAZINE & ORDNANCE OPERATIONS FACILITY
OPERATIONS
AUDIO VISUAL ELEVATIONS

SCALE: AS NOTED

EPROJECT NO.: 1667770

CONSTR. CONTR. NO.

NAVFAC DRAWING NO.
12894077

SHEET 127 OF 140

TA202

6/20/2025 1:13:34 PM TA202
\\bc1vs01\Hdqs\PDZE1628\TELE\BLDG-1667770-T-BIM_v21.rvt

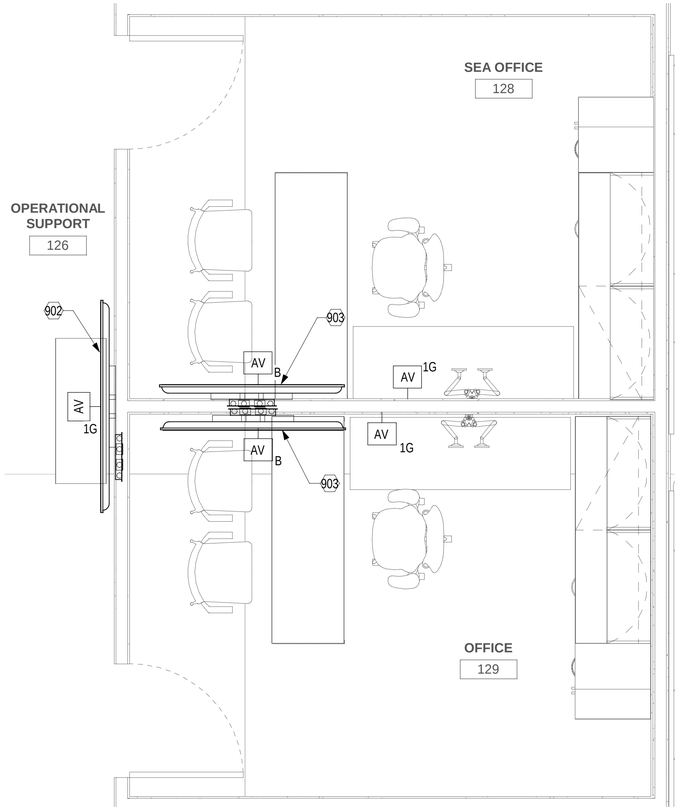

C1 AUDIO VISUAL ENLARGED PLAN - ROOMS 126, 128 & 129

1/2" = 1'-0" (TA101)

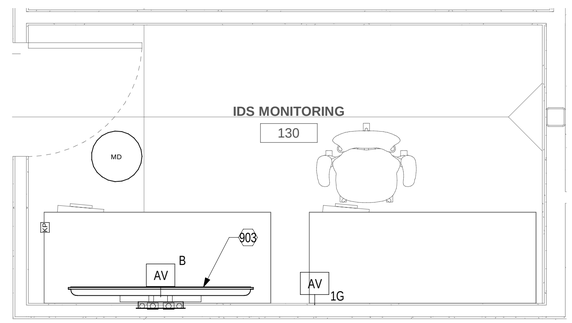

C3 AUDIO VISUAL ENLARGED PLAN - IDS MONITORING

1/2" = 1'-0" (TA101)

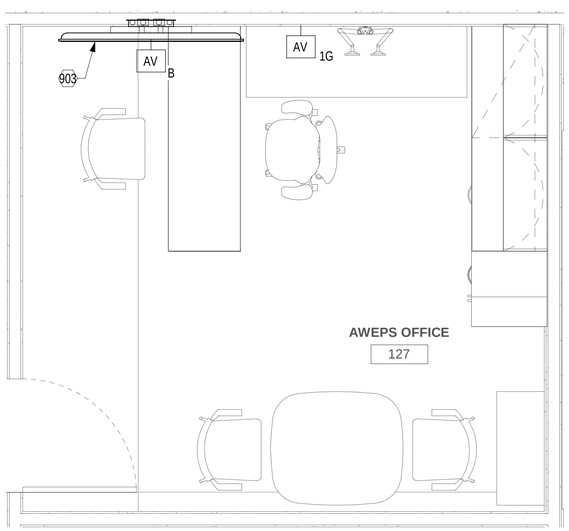

A1 AUDIO VISUAL ENLARGED PLAN - ROOM 127

1/2" = 1'-0" (TA101)

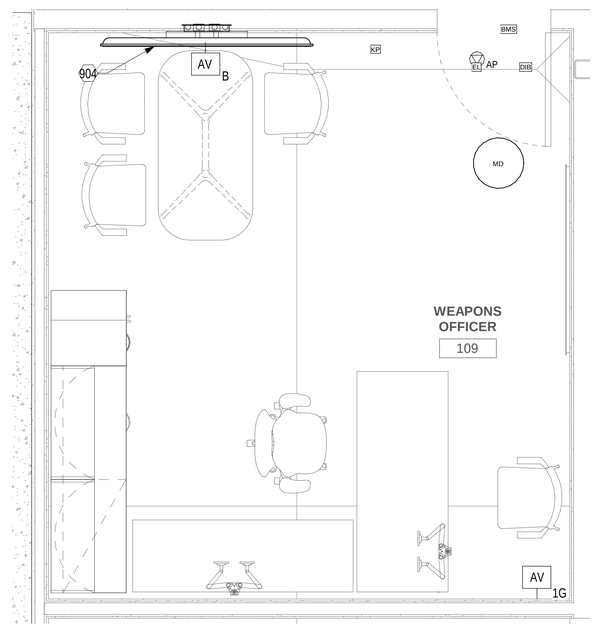

A3 AUDIO VISUAL ENLARGED PLAN - ROOM 109

1/2" = 1'-0" (TA101)

GENERAL SHEET NOTES

1. REFER TO A_TA001 FOR SYMBOLS, ABBREVIATIONS AND GENERAL NOTES.

SHEET KEYNOTES

902 70" DISPLAY WITH MOUNT AND OFFSET BACKBOX. BOTTOM OF DISPLAY MOUNTED AT 66" A.F.F. SEE C3/A_TA501 FOR DETAIL.

903 60" DISPLAY WITH MOUNT AND BACKBOX. BOTTOM OF DISPLAY MOUNTED AT 48" A.F.F. SEE C1/A_TA501 FOR DETAIL.

904 70" DISPLAY WITH MOUNT AND BACKBOX. BOTTOM OF DISPLAY MOUNTED AT 48" A.F.F. SEE C1/A_TA501 FOR DETAIL.

0 1' 2' 4' 6'

1/2" = 1'-0"

SYM	DESCRIPTION	DATE	APPR

NAVFAC

Certified Technology Specialist-Design CTS-D 6/23/2025 Steven J Frost #2386776 Expires 2025-06-30 AVIXA SEAL

Jacobs
1100 NORTH GLEBE ROAD
SUITE 500
ARLINGTON, VIRGINIA 22201
571.218.1000
FAX: 571.218.1600

A/E INFO

APPROVED

FOR COMMANDER NAVFAC

ACTIVITY
APPROVED BY LCDR ELIZABETH OLOKODE NAVFAC NLON FEAD DIRECTOR NEW LONDON, GROTON, CT

SATISFACTORY TO DATE 05/27/2025

DES	SJY	DRW	TLO	CHK	JFH
PM/DM	SDS / RSF				
BRANCH MANAGER	WRB				
CHIEF ENG/ARCH	JWJ				
FIRE PROTECTION	HPN				

DEPARTMENT OF THE NAVY
NAVAL FACILITIES ENGINEERING SYSTEMS COMMAND - MID-ATLANTIC
NAVAL FACILITIES ENGINEERING SYSTEMS COMMAND
MID-ATLANTIC
NAVAL STATION - NORFOLK, VA
NAVAL SUBMARINE BASE NEW LONDON
GROTON, CONNECTICUT
P-1102 WEAPONS MAGAZINE & ORDNANCE OPERATIONS FACILITY
OPERATIONS
AUDIO VISUAL ENLARGED PLANS

SCALE: AS NOTED

EPROJECT NO.: 1667770

CONSTR. CONTR. NO.

NAVFAC DRAWING NO. 12894078

SHEET 128 OF 140

TA401

6/20/2025 1:13:42 PM TA401
\\wlv-vs01\esp\PROJECTS\28TELE\BLDG-1667770-T-BIM_V21.rvt

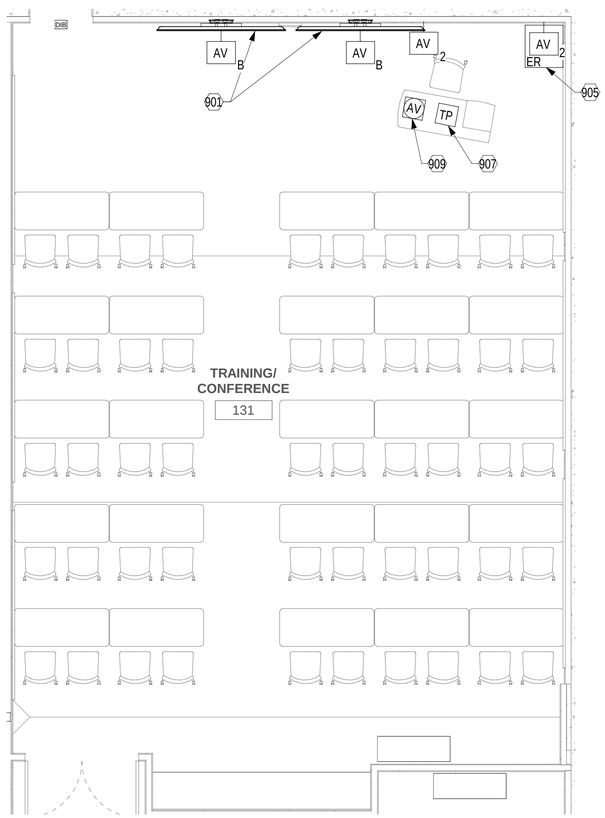

A1 AUDIO VISUAL ENLARGED PLANS - ROOM 131

1/4" = 1'-0" (TA101)

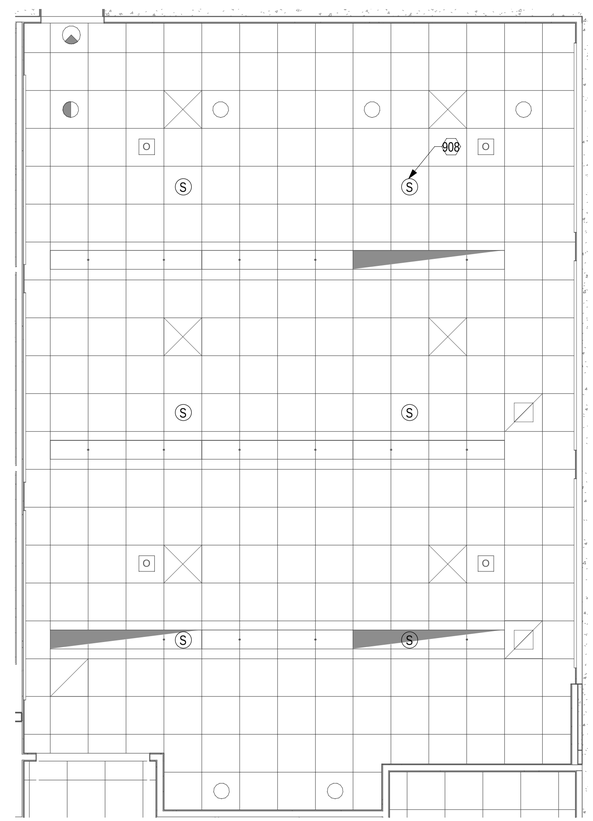

A3 AUDIO VISUAL ENLARGED PLANS - RCP ROOM 131

1/4" = 1'-0"

GENERAL SHEET NOTES

A. REFER TO TA001 FOR SYMBOLS, ABBREVIATIONS AND GENERAL NOTES.

SHEET KEYNOTES

901 86" SMART DISPLAY WITH MOUNT AND BACKBOX. BOTTOM OF DISPLAY MOUNTED 48" A.F.F. SEE C1/A_TA501 FOR DETAIL.

905 12 RU SPACE 27" DEEP AUDIO VISUAL EQUIPMENT RACK.

907 TABLE MOUNTED TOUCH CONTROL PANEL.

908 CEILING RECESSED LOUDSPEAKER.

909 REFER TO A1/TA502 FOR FLOORBOX DETAIL. AV CONDUIT PATHWAY STUBBED OUT TO OPEN CEILING.

0 2' 4' 8' 12'

1/4" = 1'-0"

PLAN NORTH

SYM	DESCRIPTION	DATE	APPR

NAVFAC

Certified Technology Specialist-Design
6/23/2025
CTS-D
Steven J Yost
#2386776
Expires
2025/06/30
AVIXA
SEAL

Jacobs
1100 NORTH GLEBE ROAD
SUITE 500
ARLINGTON, VIRGINIA 22201
571.218.1000
FAX: 571.218.1600
A/E INFO

APPROVED

FOR COMMANDER NAVFAC

ACTIVITY
APPROVED BY LCDR ELIZABETH
CLOKCODE NAVFAC N.ON FEAD
DIRECTOR NEW LONDON, GROTON, CT

SATISFACTORY TO DATE 05/27/2025

DES	SJY	DRW	TLO	CHK	JFH

PM/DM	SDS / RSF
BRANCH MANAGER	WRB
CHIEF ENG/ARCH	JWJ
FIRE PROTECTION	HPN

DEPARTMENT OF THE NAVY
NAVAL FACILITIES ENGINEERING SYSTEMS COMMAND
MID-ATLANTIC
NAVAL FACILITIES ENGINEERING SYSTEMS COMMAND - MID-ATLANTIC
NAVAL STATION - NORFOLK, VA
NAVAL SUBMARINE BASE NEW LONDON
GROTON, CONNECTICUT
P-1102 WEAPONS MAGAZINE & ORDNANCE OPERATIONS FACILITY
OPERATIONS
AUDIO VISUAL ENLARGED PLANS

SCALE: AS NOTED

EPROJECT NO.: 1667770

CONSTR. CONTR. NO.

NAVFAC DRAWING NO.
12894079

SHEET 129 OF 140

TA402

6/20/2025 1:13:52 PM TA402
\\ac1vs01\edp\PDZE1638\TELE\BLDG-1667770-T-BIM_v21.rvt

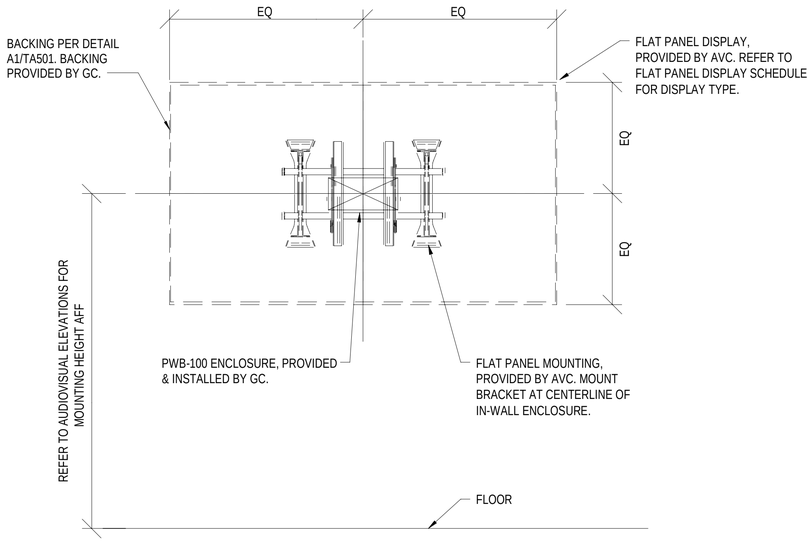

C1 FLAT PANEL DISPLAY BRACKET DETAIL
NTS

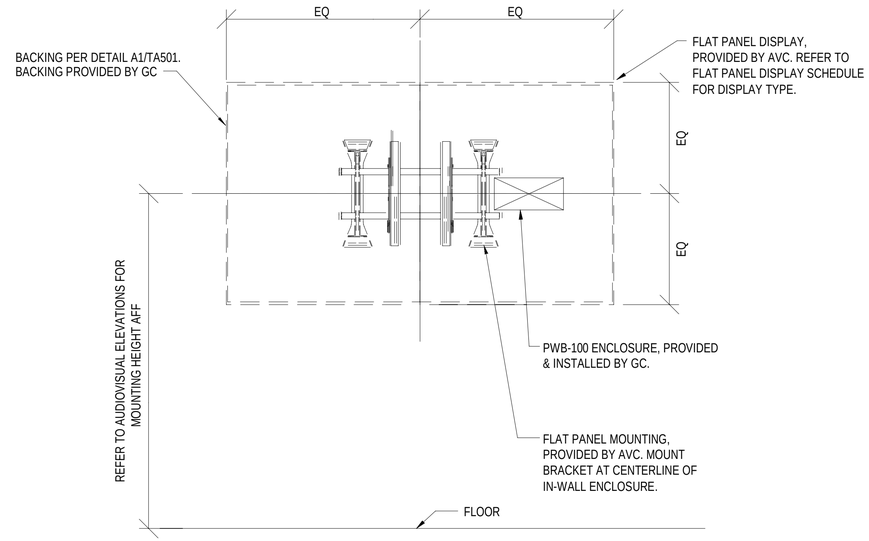

C3 FLAT PANEL DISPLAY BRACKET DETAIL ROOM 126
NTS

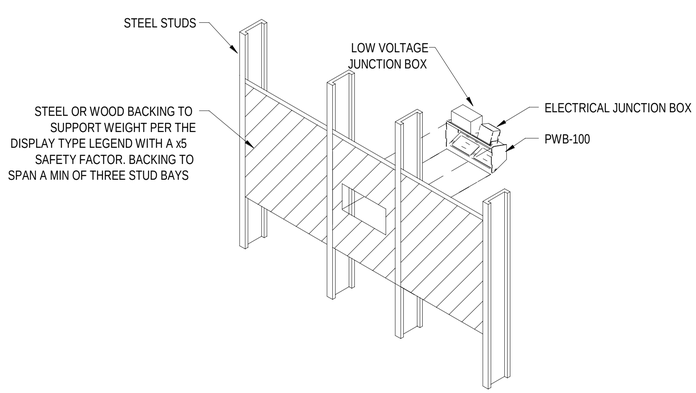

A1 BLOCKING DETAIL
NTS

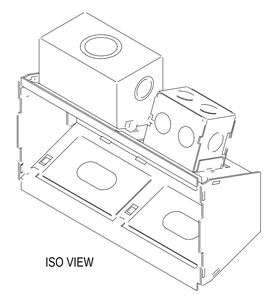

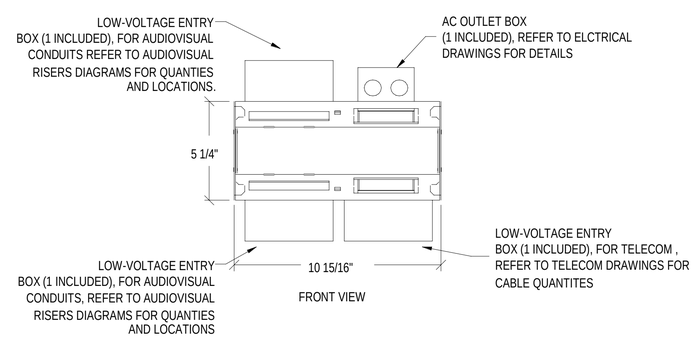

A3 PWB-100 DETAIL
NTS

GENERAL SHEET NOTES

A. REFER TO A_TA001 FOR SYMBOLS, ABBREVIATIONS AND GENERAL NOTES.

SHEET KEYNOTES

1. BACKING MUST BE A MINIMUM OF 24" H X 48" W.
2. SEE PARTITION TYPES FOR STUD SIZE AND MATERIAL.
3. VERIFY LOCATIONS OF BACKING WITH PLANS AND ROOM ELEVATIONS.
4. FLAT PANEL DISPLAYS AND MOUNTING BRACKETS BY THE AVC.

SYM	DESCRIPTION	DATE	APPR

NAVFAC

Certified Technology Specialist-Design CTS-D 6/23/2025 Steven J Yost #2386776 Expires 2025-06-30 SEAL

Jacobs
1100 NORTH GLEBE ROAD
SUITE 500
ARLINGTON, VIRGINIA 22201
571.218.1000
FAX: 571.218.1600

A/E INFO

APPROVED
FOR COMMANDER NAVFAC
ACTIVITY APPROVED BY LCDR ELIZABETH OLOKODE NAVFAC NLON FEAD DIRECTOR NEW LONDON, GROTON, CT
SATISFACTORY TO DATE 05/27/2025

DES SJY	DRW TLO	CHK JFH	
PM/DM	SDS / RSF		
BRANCH MANAGER	WRB		
CHIEF ENG/ARCH	JWJ		
FIRE PROTECTION	HPN		

DEPARTMENT OF THE NAVY
NAVAL FACILITIES ENGINEERING SYSTEMS COMMAND
MID-ATLANTIC
NAVAL FACILITIES ENGINEERING SYSTEMS COMMAND - MID-ATLANTIC
NAVAL STATION - NORFOLK, VA
NAVAL SUBMARINE BASE NEW LONDON
GROTON, CONNECTICUT
P-1102 WEAPONS MAGAZINE & ORDNANCE OPERATIONS FACILITY
OPERATIONS
AUDIO VISUAL DETAILS

SCALE: AS NOTED
EPROJECT NO.: 1667770
CONSTR. CONTR. NO.
NAVFAC DRAWING NO. 12894080
SHEET 130 OF 140
TA501

6/20/2025 1:13:56 PM TA501
\\bk1v9001\fedpjf\DZE1628\TE\ELE\BLDG-1667770-T-BIM_v21.rvt

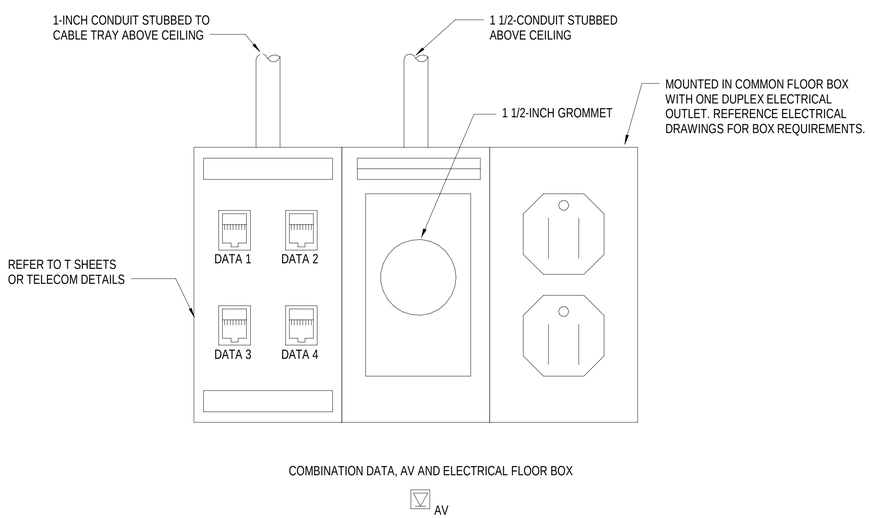

COMBINATION DATA, AV AND ELECTRICAL FLOOR BOX

A1 VOICE AND DATA FLOOR BOX OUTLET

NTS

GENERAL SHEET NOTES

A. REFER TO A_TA001 FOR SYMBOLS, ABBREVIATIONS AND GENERAL NOTES.

SYM	DESCRIPTION	DATE	APPR

Certified Technology Specialist-Design CTS-D 6/23/2023 Steven J Yost #2386776 Expires 2025/06/30

Jacobs
1100 NORTH GLEBE ROAD
SUITE 500
ARLINGTON, VIRGINIA 22201
571.218.1000
FAX: 571.218.1600

A/E INFO

APPROVED

FOR COMMANDER NAVFAC

ACTIVITY
APPROVED BY LCDR ELIZABETH OLOKODE NAVFAC NLON FEAD DIRECTOR NEW LONDON, GROTON, CT

SATISFACTORY TO DATE 05/27/2025

DES	SJY	DRW	TLO	CHK	JFH

PM/DM	SDS / RSF
BRANCH MANAGER	WRB
CHIEF ENG/ARCH	JWJ
FIRE PROTECTION	HPN

DEPARTMENT OF THE NAVY
NAVAL FACILITIES ENGINEERING SYSTEMS COMMAND
NAVAL FACILITIES ENGINEERING SYSTEMS COMMAND - MID-ATLANTIC
MID-ATLANTIC
NAVAL STATION - NORFOLK, VA
NAVAL SUBMARINE BASE NEW LONDON
GROTON, CONNECTICUT
P-1102 WEAPONS MAGAZINE & ORDNANCE OPERATIONS FACILITY
OPERATIONS
AUDIO VISUAL DETAILS

SCALE: AS NOTED
EPROJECT NO.: 1667770
CONSTR. CONTR. NO.
NAVFAC DRAWING NO. 12894081
SHEET 131 OF 140
TA502

6/20/2025 1:14:00 PM TA502
\\bk1vs001\hdsp\PDZE1620\TELE\BLDG-1667770-T-BIM_v21.rvt

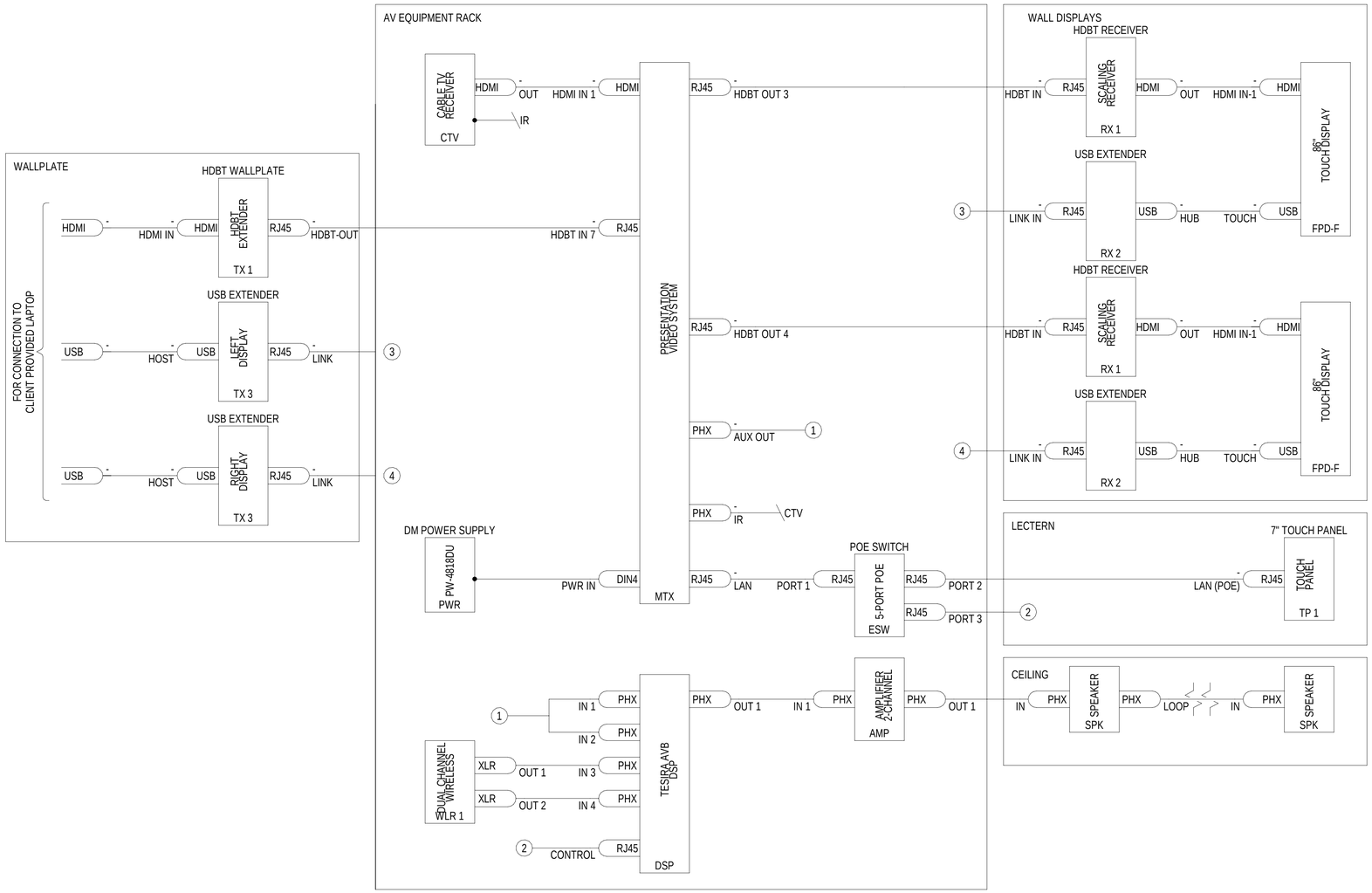

B1 AUDIO VISUAL FLOW DIAGRAM - TRAINING ROOM 131

NTS

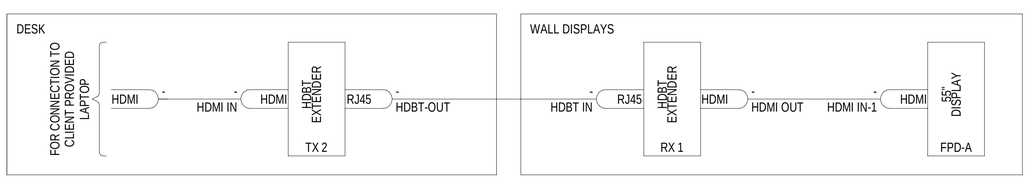

A1 AUDIO VISUAL FLOW DIAGRAM - OFFICE (TYPICAL)

NTS

GENERAL SHEET NOTES

SHEET KEYNOTES

SYM	DESCRIPTION	DATE	APPR

Jacobs
1100 NORTH GLEBE ROAD
SUITE 500
ARLINGTON, VIRGINIA 22201
571.218.1000
FAX: 571.218.1600

A/E INFO

APPROVED

FOR COMMANDER NAVFAC

ACTIVITY: APPROVED BY LCDR ELIZABETH OLOKODE NAVFAC NLON FEAD DIRECTOR NEW LONDON, GROTON, CT

SATISFACTORY TO DATE 05/27/2025

DES SJY DRW TLO CHK JFH

PM/DM SDS / RSF

BRANCH MANAGER WRB

CHIEF ENG/ARCH JWJ

FIRE PROTECTION HPN

DEPARTMENT OF THE NAVY
NAVAL FACILITIES ENGINEERING SYSTEMS COMMAND - MID-ATLANTIC
NAVAL FACILITIES ENGINEERING SYSTEMS COMMAND
MID-ATLANTIC
NAVAL STATION - NORFOLK, VA
NAVAL SUBMARINE BASE NEW LONDON
GROTON, CONNECTICUT
P-1102 WEAPONS MAGAZINE & ORDNANCE OPERATIONS FACILITY
OPERATIONS
AUDIO VISUAL DIAGRAMS

SCALE: AS NOTED

EPROJECT NO.: 1667770

CONSTR. CONTR. NO.

NAVFAC DRAWING NO. 12894082

SHEET 132 OF 140

TA601

6/20/2025 1:14:05 PM T-A601
\\dc1-vs01\edsp\PDZE1628\TELE\BLDG-1667770-T-BIM_v21.rvt

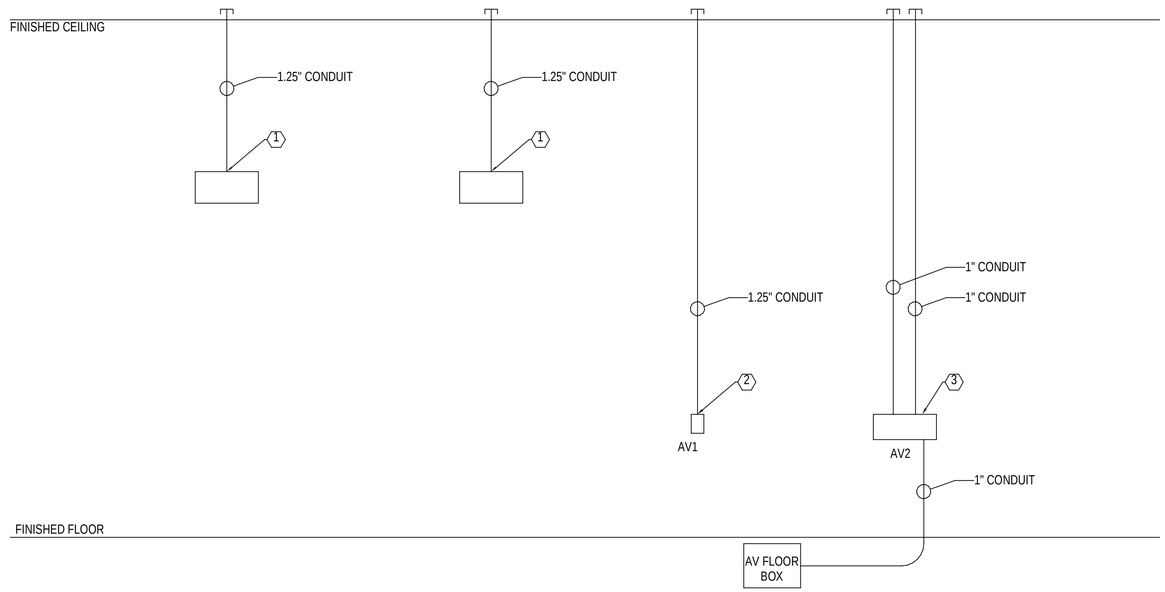

C1 AUDIO VISUAL CONDUIT RISER - TRAINING ROOM 131

NTS

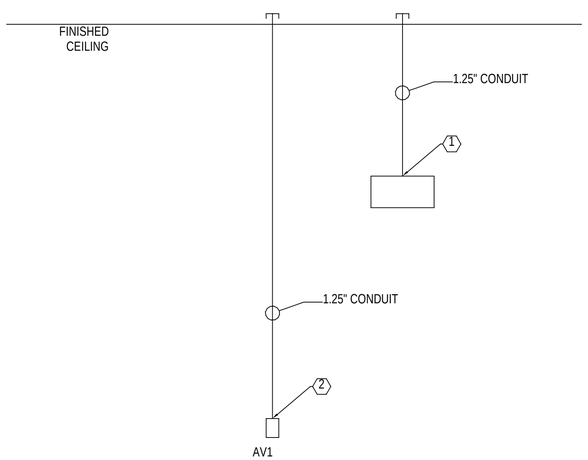

A1 AUDIO VISUAL CONDUIT RISER - OFFICE (TYPICAL)

NTS

GENERAL SHEET NOTES

SHEET KEYNOTES

1. RECESSED AV BACK BOX. REFER TO SCHEDULE TA001.
2. ONE GANG BACK BOX.
3. TWO GANG AV BACK BOX.

SYM	DESCRIPTION	DATE	APPR

NAVFAC

Certified Technology Specialist-Design CTS-D 6/23/2025 Steven J Yost #2336776 Expires 2025-06-30 AVIXA

SEAL

Jacobs
1100 NORTH GLEBE ROAD
SUITE 500
ARLINGTON, VIRGINIA 22201
571.218.1000
FAX: 571.218.1600

A/E INFO

APPROVED

FOR COMMANDER NAVFAC

ACTIVITY
APPROVED BY LCDR ELIZABETH OLOKODE NAVFAC NLON FEAD DIRECTOR NEW LONDON, GROTON, CT

SATISFACTORY TO DATE 05/27/2025

DES	SJY	DRW	TLO	CHK	JFH

PM/DM	SDS / RSF
BRANCH MANAGER	WRB
CHIEF ENG/ARCH	JVJ
FIRE PROTECTION	HPN

DEPARTMENT OF THE NAVY
NAVAL FACILITIES ENGINEERING SYSTEMS COMMAND
NAVAL FACILITIES ENGINEERING SYSTEMS COMMAND - MID-ATLANTIC
MID-ATLANTIC
NAVAL SUBMARINE BASE NEW LONDON
NAVAL STATION - NORFOLK, VA
GROTON, CONNECTICUT
P-1102 WEAPONS MAGAZINE & ORDNANCE OPERATIONS FACILITY
OPERATIONS
AUDIO VISUAL DIAGRAMS

SCALE: AS NOTED

EPROJECT NO.: 1667770

CONSTR. CONTR. NO.

NAVFAC DRAWING NO. 12894083

SHEET 133 OF 140

TA602

6/20/2025 1:14:10 PM TA602
\\ad.jacobs.com\dfs\PROJECTS\328\TELE\BLDG-1667770-T-BIM_V21.rvt

SECURITY

CR	CARD READER/KEYPAD COMBO
DA	DURESS ALARM
DC	ACS DOOR POSITION SENSOR
BMS	IDS HIGH SECURITY BALANCED MAGNETIC SWITCH
PCU	IDS PREMISE CONTROL UNIT
●	SYSTEMS PUSH BUTTON
ACP	ACCESS CONTROL PANEL
MD	IDS MOTION DETECTOR MOUNTED TO CEILING
EL	24VDC ELECTRIC LOCK SET W/ INTERNAL REQUEST-TO-EXIT (PROVIDED BY DIV. 08)
NS	NETWORK SWITCH
P	120VAC POWER CONNECTION (PROVIDED BY DIV. 26)
▽	DATA CONNECTION (PROVIDED BY DIV. 27)
▭	8MP FIXED LENS CCTV CAMERA
PNO	20MP MULTI-SENSOR PANORAMIC CCTV CAMERA
DIB	DOOR INTERFACE BOX
J	6" X 6" X 4" HINGED COVER KEY LOCKABLE ENCLOSURE
J1	10" X 10" X 4" HINGED COVER KEY LOCKABLE ENCLOSURE
J2	12" X 12" X 6" HINGED COVER KEY LOCKABLE ENCLOSURE
KP	IDS CONTROL KEYPAD
M	IDS MOTION DETECTOR PENDANT MOUNTED TO STRUCTURE UNO
MW	IDS MOTION DETECTOR WALL MOUNTED
IT	INFORMATION TECHNOLOGY (IT) CABINET (BY DIV 27)

ABBREVIATIONS

AFF	ABOVE FINISHED FLOOR
BFG	BELOW FINISHED GRADE
CR	CARD READER
C	CONDUIT
EA	EACH
EC	ELECTRICAL CONTRACTOR
ER	EQUIPMENT ROOM
EX	EXISTING
FOC	FIBER OPTIC CABLES
GFCI	GOVERNMENT FURNISHED, CONTRACTOR INSTALLED
GFGI	GOVERNMENT FURNISHED, GOVERNMENT INSTALLED
IDS	INTRUSION DETECTION SYSTEM
MS	MOTION SENSOR
NMCI	NAVY MARINE CORPS INTRANET
NIPR	NON-SECURE INTERNET PROTOCOL ROUTER
QU	QUANTITY
REQ'D	REQUIRED
RM	ROOM
SIPR	SECURE INTERNET PROTOCOL ROUTER
SHT	SHEET
SM	SINGLE MODE
TR	TELECOMMUNICATION ROOM
TGB	TELECOMMUNICATION GROUNDING BUSBAR
TMH	TELECOMMUNICATION MAINTENANCE HOLE
TMGB	TELECOMMUNICATION MAIN GROUNDING BUSBAR
TBB	TELECOMMUNICATION BONDING BACKBONE
UNO	UNLESS NOTED OTHERWISE

SEPARATION DISTANCES BETWEEN DATA CABLES AND SPECIFIC EMI SOURCES

SOURCE OF DISTURBANCE	MINIMUM SEPARATION DISTANCE
FLUORESCENT LAMPS	6"
NEON LAMPS	6"
MERCURY VAPOUR LAMPS	6"
HIGH-INTENSITY DISCHARGE LAMPS	6"
ARC WELDERS	6"
FREQUENCY INDUCTION HEATING	40"

50' DISTANCE LIMIT RULE

A. IN NO CASE MUST A NON-LISTED OUTSIDE PLANT OR INCOMING SERVICE OUTDOOR RATED CABLE EXCEED 50 FEET FROM THE POINT OF ENTRANCE INTO ANY BUILDING. IF ON-SITE CONDITIONS RESULT IN A CASE WHERE THE CABLE EXCEEDS THE DISTANCE LIMIT THE CONTRACTOR MUST ADVISE A SOLUTION WITH THE PROJECT CONSULTANT. IN ALL CASES THE SOLUTION WOULD NEED TO INVOLVE EITHER TRANSITIONING FROM OUTDOOR NON-LISTED TO INDOOR LISTED CABLE VIA A SPLICE POINT (E.G. SPLICE CASE OR SPLICE ENCLOSURE FOR FIBER, PROTECTOR BLOCK FOR COPPER ETC.) OR THE ALTERNATIVE MUST BE TO ENCLOSE THE OUTDOOR RATED CABLE WITHIN INTERMEDIATE METAL CONDUIT (IMC) OR RIGID METAL CONDUIT (RMC) THAT IS PROPERLY SEALED AND BONDED TO A GROUNDING ELECTRODE. RETAINING THE OUTDOOR CABLE WITHIN CONDUIT MUST EFFECTIVELY EXTEND THE POINT OF ENTRANCE INTO THE BUILDING.

OSP DETECTION TAPE INCLUSION

A. IN ORDER TO REDUCE THE CHANCE OF ACCIDENTAL DIG-UP OF OUTSIDE PLANT DUCTBANK ELEMENTS IN THE FUTURE, PROVIDE A DETECTABLE WARNING TAPE CONTAINING METALLIC TRACINGS ALONG THE DUCTBANK PATH AT 12" BELOW GRADE MINIMUM. COLOR OF THE DETECTABLE TAPE MUST BE ORANGE OR WHICHEVER COLOR THE COMMON GROUND ALLIANCE (CGA) HAS CURRENTLY DETERMINED FOR TELEVISION AND COMMUNITY ANTENNA TELEVISION (CATV) CABLES.

CONDUIT INSTALLATION NOTES

ASSOCIATED WITH DIVISION 26

THE RACEWAY SYSTEM FOR TELECOM CABLE MUST FOLLOW THE NEC AND ALL LOCAL CODES GOVERNING THIS PROJECT. ADDITIONAL REQUIREMENTS ARE AS FOLLOWS:

1. A PULL CORD (NYLON, 1/8" MINIMUM) MUST BE INSTALLED WITHIN ALL CONDUITS.
2. CONDUIT MUST RUN IN MOST DIRECT ROUTE POSSIBLE, USUALLY PARALLEL WITH BUILDING LINES.
3. CONDUIT SLEEVES MUST BE RIGID GALVANIZED STEEL FOR PENETRATIONS OF CONCRETE SLABS, CONCRETE WALLS. ALL SLEEVES MUST BE RIGIDLY INSTALLED USING APPROPRIATE FITTINGS AND ALL PENETRATIONS MUST BE GROUTED AROUND THE SLEEVE. SLEEVES MUST PROJECT A MINIMUM OF 4" BEYOND WALL OR FLOOR SURFACE. ALL PENETRATIONS MUST BE FIRESTOPPED.
4. CONDUIT RUN MUST CONTAIN NO CONTINUOUS SECTIONS LONGER THAN 100 FEET. IF RUNS TOTAL MORE THAN 100 FEET, PULL POINTS OR PULL BOXES MUST BE INSERTED.
5. CONDUIT RUNS TO WORK AREAS MUST SERVE NO MORE THAN ONE COMMUNICATION OUTLET. DAISY CHAINING IS NEVER ALLOWED.
6. CONDUIT MUST HAVE NO MORE THAN TWO 90 DEGREES OF BENDS AT ANY POINT OR MORE THAN 180 DEGREES OF CUMULATIVE BENDS BETWEEN PULL POINTS.
7. INSTALL CONDUITS WITH A MINIMUM OF BENDS AND OFFSETS. BENDS MUST NOT KINK OR DESTROY INTERIOR CROSS SECTION OF RACEWAY. FACTORY MADE BENDS MUST BE USED FOR RACEWAY'S 1" TRADE SIZE AND LARGER. BENDS RADIUS MUST BE 6 TIMES INTERNAL DIAMETER FOR CONDUIT SIZES UP TO 2". A CONDUIT GREATER THAN 2" MUST HAVE BEND RADIUS AT LEAST 10 TIMES DIAMETER OF CONDUIT. DO NOT USE PULL BOX IN LIEU OF A BEND RADIUS. BEND RADIUS ON CABLING MUST ALWAYS BE MADE WITHIN THE CONDUIT.
8. DO NOT INSTALL CONDUIT OVER OR ADJACENT TO BOILERS, INCINERATORS, HOT WATER LINES, OR STEAM LINES.
9. REAM ALL CONDUIT ENDS AND FIT THEM WITH AN INSULATED BUSHING TO ELIMINATE SHARP EDGES THAT MAY DAMAGE CABLES.
10. AFTER INSTALLATION, LEAVE CONDUITS CLEAN, DRY AND UNOBSTRUCTED, REAMED AND FITTED WITH BUSHINGS.
11. ELECTRICAL METALLIC TUBING AND RIGID METAL CONDUIT ARE THE ONLY ALLOWED TYPES FOR INTERIOR BUILDING. FLEXIBLE METAL CONDUIT IS NEVER ALLOWED.
12. CONDUIT SYSTEM INSTALLATION:
    - 12.1. CABLE IN EXTERIOR, ABOVE GRADE LOCATIONS: RIGID GALVANIZED STEEL.
    - 12.2. INTERIOR LOCATIONS: EMT.
    - 12.3. CABLE BELOW GRADE: SCHEDULE 40 PVC.
13. ALL METALLIC CONDUITS MUST BE APPROPRIATELY GROUNDED AS SPECIFIED IN THE NEC, ANSI/TIA/EIA J-STD-607-B AND PER MANUFACTURER'S SPECIFICATIONS.
14. CONDUITS ARE TO BE CLEARLY MARKED AT EACH END TO INDICATE THE TRADE (E.G. AV, TELECOM) THAT THE CONDUIT IS INTENDED TO SUPPORT.
15. CABLE PATHWAY MUST NOT EXCEED 295 FEET. THE LENGTH MUST BE MEASURED FROM THE OUTLET IN THE WORK AREA TO PATCH PANEL IN THE RACK.
16. FOR OUTSIDE PLANT CONDUITS ROUTES PROVIDE A SITE LEVEL ACCESSIBLE HANDHOLE EVERY (2) 90 DEGREE BENDS OR 180 DEGREES IN BENDS TOTAL. DISTANCE BETWEEN EACH HANDHOLE MUST NOT EXCEED 600 FEET DISTANCE. DO NOT USE HANDHOLE IN LIEU OF A BEND RADIUS. BEND RADIUS ON CABLING MUST ALWAYS BE MADE WITHIN THE CONDUIT.
17. OUTSIDE PLANT LOCATIONS, ROUTES, AND PULL POINTS ARE INDICATIVE ONLY. CONTRACTOR TO REVIEW THE PROJECT SITE AND SUBMIT SHOP DRAWING FOR REVIEW BEFORE COMMENCING WORK.

GENERAL PROJECT NOTES

A. ALL MOUNTING HEIGHTS ARE TO THE CENTER LINE OF THE DEVICE BACKBOX UNLESS NOTED OTHERWISE.
B. ALL BOXES AND CONDUITS IN WALLS AND CEILINGS MUST BE FLUSH MOUNTED OR CONCEALED UNLESS NOTED OTHERWISE.
C. ALL EXTERIOR OUTLETS MUST BE WEATHERPROOF.
D. EXACT LOCATION OF ALL TELECOM OUTLETS LOCATED IN FURNITURE AND MILLWORK TO BE VERIFIED WITH ARCHITECT PRIOR TO INSTALLATION.
E. ELECTRICAL OUTLETS MUST BE PROVIDED WITHIN THREE FEET OF COMMUNICATION OUTLETS AT EQUAL HEIGHT.

SEPARATION DISTANCES BETWEEN POWER AND DATA CABLES

CONDITION	MINIMUM SEPARATION DISTANCE		
	< 2kVA	2-5 kVA	> 5kVA
UNSHIELDED POWER LINES OR ELECTRICAL EQUIPMENT IN PROXIMITY TO OPEN OR NONMETAL PATHWAYS.	5"	12"	24"
UNSHIELDED POWER LINES OR ELECTRICAL EQUIPMENT IN PROXIMITY TO A GROUNDED METAL CONDUIT PATHWAY.	2.5"	6"	12"
POWER LINES ENCLOSED IN A GROUNDED METAL CONDUIT (OR EQUIVALENT SHIELDING) IN PROXIMITY TO A GROUNDED METAL CONDUIT PATHWAY.		3"	6"
ELECTRICAL MOTORS AND TRANSFORMERS.			48"

CABLE SCHEDULE

CABLE TYPE	DESCRIPTION	USE
A1	COMPOSITE OSDP: 2PR, 24AWG OAS, 4C 22AWG, 4C 18AWG CMP	DOOR INTERFACE BOX OSDP
A2	COMPOSITE WEIGAND: 3PR 18AWG, 4C 16AWG, 6C 18AWG CMP	DOOR INTERFACE BOX WEIGAND
B	2PR 24AWG	RS-485
C1	1 PR 22AWG, SHLD + 2C 16AWG PWR	CARD READER OSDP
C2	6C 22AWG, SHLD	CARD READER WIEGAND
D	2C 18AWG CMP	DPS
E	6C 22AWG CMP	HSS/BMS
F	4C 18AWG CMP	REQUEST-TO-EXIT
G	4C 18AWG CMP	24VDC LOCK POWER
H	2C 20AWG CMP	TAMPER
J	4C 20AWG, SHLD	ALARM SENSOR
K	3PR 18AWG, SHLD	ALARM SENSOR
L	2C 16AWG SHLD	LOW VOLTAGE POWER
M	CATEGORY 6 UTP	VIDEO SURVEILLANCE

* OR EQUIVALENT

SECURITY HARDWARE SCHEDULE

ROOM NUMBER	DEVICE TYPE	DETAIL REFERENCE
RM 101 VESTIBULE	CARD READER	TY502 / A1
RM 101 VESTIBULE	DOOR CONTACT (DC)	TY502 / A1
RM 101 VESTIBULE	DOOR CONTACT (DC)	TY502 / A1
RM 101 VESTIBULE	ELECTRICAL LOCK (EL)	TY502 / A1
RM 101 VESTIBULE	DOOR INTERFACE BOX (DIB)	TY502 / A1
RM 103 ELECTRICAL	DOOR CONTACT (DC)	TY502 / C1
RM 103 ELECTRICAL	DOOR CONTACT (DC)	TY502 / C1
RM 104 MECHANICAL	DOOR CONTACT (DC)	TY502 / C1
RM 105 TELECOM	DOOR CONTACT (DC)	TY501 / A1
RM 105 TELECOM	ELECTRICAL LOCK (EL)	TY501 / A1
RM 105 TELECOM	DOOR INTERFACE BOX (DIB)	TY501 / A1
RM 105 TELECOM	SECURITY KEYPAD	TY501 / A1
RM 105 TELECOM	ACCESS CONTROL PANEL	TY501 / A1
RM 105 TELECOM	NETWORK SWITCH (NS)	TY501 / A1
RM 107 SIPR OIS	BALANCED MAGNETIC SWITCH (BMS)	TY502 / A4
RM 107 SIPR OIS	SECURITY KEYPAD	TY501 / C3
RM 107 SIPR OIS	SECURITY KEYPAD	TY501 / C3
RM 107 SIPR OIS	CEILING MOUNT SECURITY PIR	TY503/ A3
RM 107 SIPR OIS	ELECTRICAL LOCK (EL)	TY502 / A4
RM 107 SIPR OIS	DOOR INTERFACE BOX (DIB)	TY502 / A4
RM 107 SIPR OIS	ELECTRICAL LOCK (EL)	TY502 / A4
RM 107 SIPR OIS	DOOR INTERFACE BOX (DIB)	TY502 / A4
RM 107 SIPR OIS	HINGED COVER KEY LOCKABLE ENCLOSURE	TY501 / A1
RM 109 WEAPONS OFFICER	BALANCED MAGNETIC SWITCH (BMS)	TY502 / A4
RM 109 WEAPONS OFFICER	CEILING MOUNT SECURITY PIR	TY503/ A3
RM 109 WEAPONS OFFICER	IDS MOTION DETECTOR PENDANT MOUNTED TO SURFACE	
RM 109 WEAPONS OFFICER	CEILING MOUNT SECURITY PIR	
RM 109 WEAPONS OFFICER	CEILING MOUNT SECURITY PIR	
RM 109 WEAPONS OFFICER	CEILING MOUNT SECURITY PIR	
RM 110 ARMS ROOM	SECURITY KEYPAD	TY501 / C3
RM 110 ARMS ROOM	SECURITY KEYPAD	TY502 / A3
RM 110 ARMS ROOM	SECURITY KEYPAD	TY501 / C3
RM 110 ARMS ROOM	BALANCED MAGNETIC SWITCH (BMS)	TY502 / A4
RM 110 ARMS ROOM	CEILING MOUNT SECURITY PIR	
RM 113 E6 BUNKS	DOOR CONTACT (DC)	TY502 / A4
RM 115 E7 BUNKS	DOOR CONTACT (DC)	TY502 / A4
RM 122 E7 BUNKS	DOOR CONTACT (DC)	TY502 / A4
RM 125 E6 BUNKS	DOOR CONTACT (DC)	TY502 / A4
RM 126 OPERATIONAL SUPPORT	DOOR CONTACT (DC)	TY501 / A1
RM 126 OPERATIONAL SUPPORT	CARD READER	TY501 / A1
RM 126 OPERATIONAL SUPPORT	ELECTRICAL LOCK (EL)	TY501 / A1
RM 126 OPERATIONAL SUPPORT	DOOR INTERFACE BOX (DIB)	TY501 / A1
RM 126 OPERATIONAL SUPPORT	HINGED COVER KEY LOCKABLE ENCLOSURE	TY501 / A1
RM 126 OPERATIONAL SUPPORT	HINGED COVER KEY LOCKABLE ENCLOSURE	TY501 / A1
RM 126 OPERATIONAL SUPPORT	HINGED COVER KEY LOCKABLE ENCLOSURE	TY501 / A1
RM 126 OPERATIONAL SUPPORT	HINGED COVER KEY LOCKABLE ENCLOSURE	TY501 / A1
RM 126 OPERATIONAL SUPPORT	HINGED COVER KEY LOCKABLE ENCLOSURE	TY501 / A1
RM 126 OPERATIONAL SUPPORT	HINGED COVER KEY LOCKABLE ENCLOSURE	TY501 / A1
RM 126 OPERATIONAL SUPPORT	ELECTRICAL LOCK (EL)	TY501 / A1
RM 126 OPERATIONAL SUPPORT	DOOR INTERFACE BOX (DIB)	TY501 / A1
RM 131 TRAINING/CONFERENCE	DOOR CONTACT (DC)	TY501 / A1
RM 131 TRAINING/CONFERENCE	CARD READER	TY501 / A1

SYM	DESCRIPTION	DATE	APPR

NAVFAC

REGISTERED COMMUNICATIONS DISTRIBUTION DESIGNER
BICSI 61231 BICDS
Bicsi
Rene Rubio
BICSI ID #112613
EXPIRES 12-31-26
RCDD
SEAL

Jacobs
1100 NORTH GLEBE ROAD
SUITE 500
ARLINGTON, VIRGINIA 22201
571.218.1000
FAX: 571.218.1600
A/E INFO

APPROVED
DAVID G. LYONS, PE
FOR COMMANDER NAVFAC 21 MAY 2025

ACTIVITY
APPROVED BY LCDR ELIZABETH OLOKODE NAVFAC NLON FEAD DIRECTOR NEW LONDON, GROTON, CT

SATISFACTORY TO DATE	05/27/2025
DES MG / DRW LA / CHK RR	
PM/DM	SDS / RSF
BRANCH MANAGER	WRB
CHIEF ENG/ARCH	JWJ
FIRE PROTECTION	HPN

DEPARTMENT OF THE NAVY
NAVAL FACILITIES ENGINEERING SYSTEMS COMMAND - MID-ATLANTIC
NAVAL FACILITIES ENGINEERING SYSTEMS COMMAND
MID-ATLANTIC
NAVAL STATION - NORFOLK, VA
NAVAL SUBMARINE BASE NEW LONDON
GROTON, CONNECTICUT
P-1102 WEAPONS MAGAZINE & ORDNANCE OPERATIONS FACILITY
OPERATIONS
SECURITY SYMBOLS, LEGEND, ABBREVIATIONS, AND NOTES

SCALE:	AS NOTED
EPROJECT NO.:	1667770
CONSTR. CONTR. NO.	
NAVFAC DRAWING NO.	12894084
SHEET	134 OF 140

TY001

6/20/2025 1:15:09 PM TY001
\\ds\navfac\epsp\PD2E1620\TELE\BLDG-1667770-T-BIM_v21.rvt

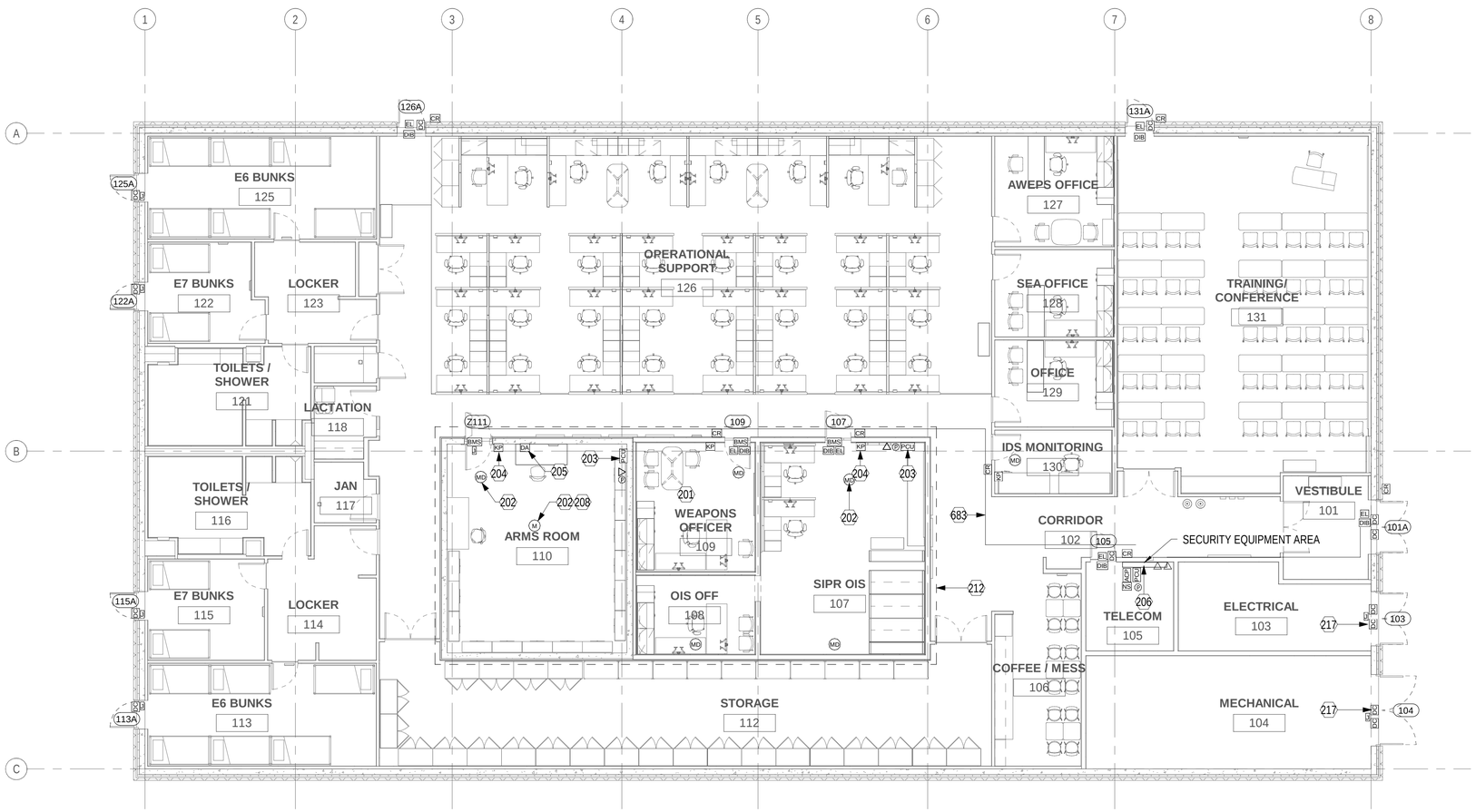

B1 OVERALL FIRST FLOOR SECURITY PLAN

1/8" = 1'-0"

GENERAL SHEET NOTES

1. REFER TO SHEET TY001 FOR SECURITY SYMBOLS AND ABBREVIATIONS.
2. PROVIDE SEPARATE AND INDEPENDENT PATHWAYS FOR SECURITY CABLING.

SHEET KEYNOTES

201 SECURITY MONITORING PLACED IN THE WEAPONS DUTY OFFICE.

202 PROVIDE ROUGH-IN FOR CEILING MOUNTED MOTION DETECTOR.

203 SPACE ALLOCATED FOR PCU (CONTROL POINT FOR DEDICATED ROOM ACCESS CONTROL AND INTRUSION DETECTION PANELS) PROVIDE JUNCTION BOX ON WALL FOR HARD WIRED 110VAC POWER MOUNTED AT 84" AFF.

204 PROVIDE SINGLE GANG BACKBOX AND 1" CONDUIT TO DEDICATED IN ROOM PCU LOCATION FOR KEY PAD.

205 PROVIDE SINGLE GANG BACKBOX AND ONE INCH CONDUIT TO IN ROOM DEDICATED PCU PANEL FOR DURESS ALARM.

206 DEDICATED WALL SPACE ALLOCATED FOR ACCESS CONTROL PANELS. PROVIDE 110VAC POWER FOR HARDWIRED CIRCUIT MOUNTED AT 72" AFF. REF C3/T-402

208 LOCATE ABOVE CEILING.

212 DASHED LINE INDICATES BOUNDARY OF SECURE PERIMETER.

217 MONITORED DOORS ARE PLACED ON SCHEDULE FOR ALERTS TO ACCESS CONTROL SYSTEM.

683 PROPOSED PATHWAY ROUTING SHOWN FOR REFERENCE. ACTUAL MEANS AND METHODS BY CONTRACTOR - COORDINATE WITH FIELD CONDITIONS.

SYM	DESCRIPTION	DATE	APPR

NAVFAC

REGISTERED COMMUNICATIONS DISTRIBUTION DESIGNER
BICSI 61231 BCDD
Rene Rubio
BICSI ID #112613
EXPIRES 12-31-26
RCDD
SEAL

Jacobs
1100 NORTH GLEBE ROAD
SUITE 500
ARLINGTON, VIRGINIA 22201
571.218.1000
FAX: 571.218.1600

A/E INFO

APPROVED

FOR COMMANDER NAVFAC

ACTIVITY
APPROVED BY LCDR ELIZABETH OLOKODE NAVFAC NLON FEAD DIRECTOR NEW LONDON, GROTON, CT

SATISFACTORY TO DATE 05/27/2025

DES	MG	DRW	LA	CHK	RR

PM/DM	SDS / RSF
BRANCH MANAGER	WRB
CHIEF ENG/ARCH	JWJ
FIRE PROTECTION	HPN

DEPARTMENT OF THE NAVY
NAVAL FACILITIES ENGINEERING SYSTEMS COMMAND
MID-ATLANTIC
NAVAL FACILITIES ENGINEERING SYSTEMS COMMAND - MID-ATLANTIC
NAVAL STATION - NORFOLK, VA
NAVAL SUBMARINE BASE NEW LONDON
GROTON, CONNECTICUT
P-1102 WEAPONS MAGAZINE & ORDNANCE OPERATIONS FACILITY
OPERATIONS
SECURITY FLOOR PLAN

SCALE: AS NOTED
EPROJECT NO.: 1667770
CONSTR. CONTR. NO.
NAVFAC DRAWING NO.
12894085
SHEET 135 OF 140

TY101

0 4' 8' 16' 24'
1/8" = 1'-0"

PLAN NORTH

6/20/2025 1:15:19 PM TY101
\\AL1vs01\Hdsp\PDZE1628\TELE\BLDG-1667770-T-BIM_v21.rvt

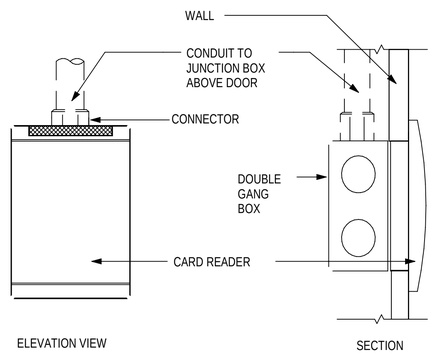

C1 CARD READER

NTS

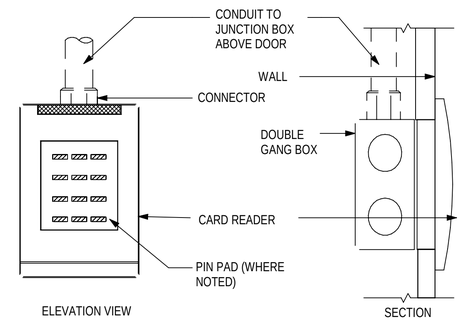

C3 CARD READER W/ PIN PAD

NTS

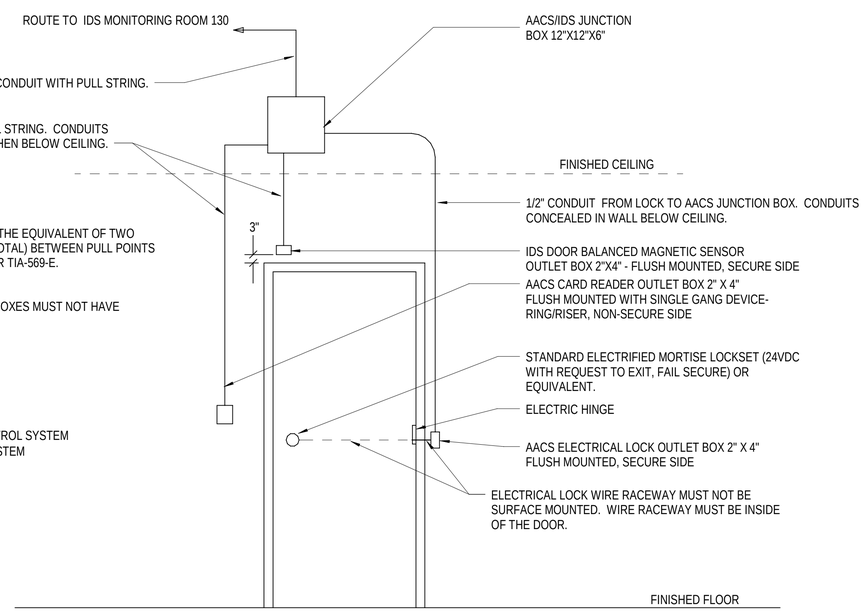

NOTES:

1. THERE MUST NOT BE MORE THAN THE EQUIVALENT OF TWO QUARTER BENDS (180 DEGREES TOTAL) BETWEEN PULL POINTS (CONDUIT BODIES AND BOXES) PER TIA-569-E.

2. ALL SURFACE MOUNTED OUTLET BOXES MUST NOT HAVE KNOCKOUTS.

ABBREVIATIONS:

AACS	AUTOMATED ACCESS CONTROL SYSTEM
IDS	INTRUSION DETECTION SYSTEM
VDC	VOLTS, DIRECT CURRENT

A1 SECURED SINGLE DOOR W/ CARD READER

NOT TO SCALE

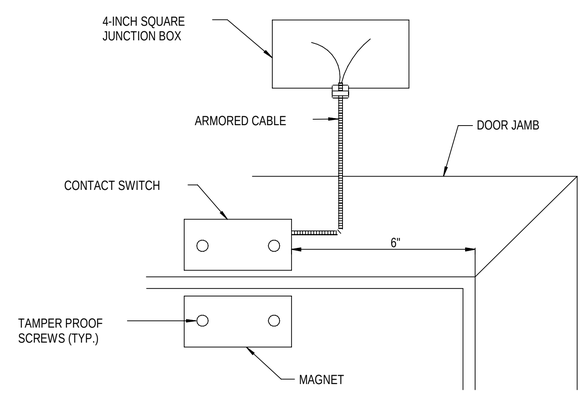

A3 SCREW MOUNT DOOR CONTACT

NTS

SYM	DESCRIPTION	DATE	APPR

NAVFAC

REGISTERED COMMUNICATIONS DISTRIBUTION DESIGNER
BICSI
Rene Rubio
BICSI ID #112613
EXPIRES 12-31-26
RCDD
SEAL

Jacobs
1100 NORTH GLEBE ROAD
SUITE 500
ARLINGTON, VIRGINIA 22201
571.218.1000
FAX: 571.218.1600

A/E INFO

APPROVED
FOR COMMANDER NAVFAC

ACTIVITY
APPROVED BY LCDR ELIZABETH
OLOKODE NAVFAC NLON FEAD
DIRECTOR NEW LONDON, GROTON, CT

SATISFACTORY TO DATE	05/27/2025
DES MG	DRW LA / CHK RR
PM/DM	SDS / RSF
BRANCH MANAGER	WRB
CHIEF ENG/ARCH	JWJ
FIRE PROTECTION	HPN

DEPARTMENT OF THE NAVY
NAVAL FACILITIES ENGINEERING SYSTEMS COMMAND
MID-ATLANTIC
NAVAL FACILITIES ENGINEERING SYSTEMS COMMAND - MID-ATLANTIC
NAVAL STATION - NORFOLK, VA
NAVAL SUBMARINE BASE NEW LONDON
GROTON, CONNECTICUT
P-1102 WEAPONS MAGAZINE & ORDNANCE OPERATIONS FACILITY
OPERATIONS
SECURITY DETAILS

SCALE:	AS NOTED
EPROJECT NO.:	1667770
CONSTR. CONTR. NO.	
NAVFAC DRAWING NO.	12894086
SHEET	136 OF 140

TY501

6/20/2025 1:15:24 PM TY501
\\dc1-vs01\Hdqp\PDZE1628\TE ELE\BLDG-1667770-T-BIM_v21.rvt

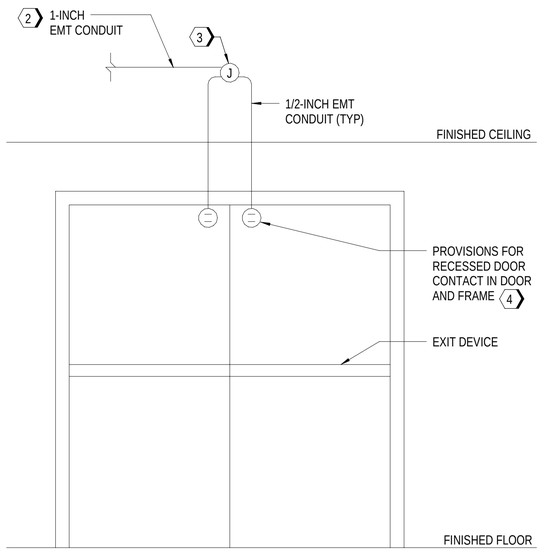

C1 MONITORED DOUBLE DOOR
NTS

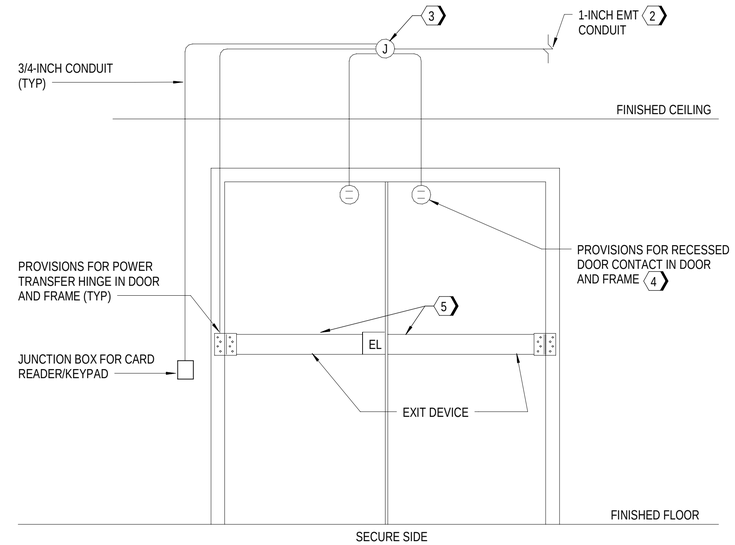

C3 SECURED DOUBLE DOOR WITH CARD READER/KEYPAD
NTS

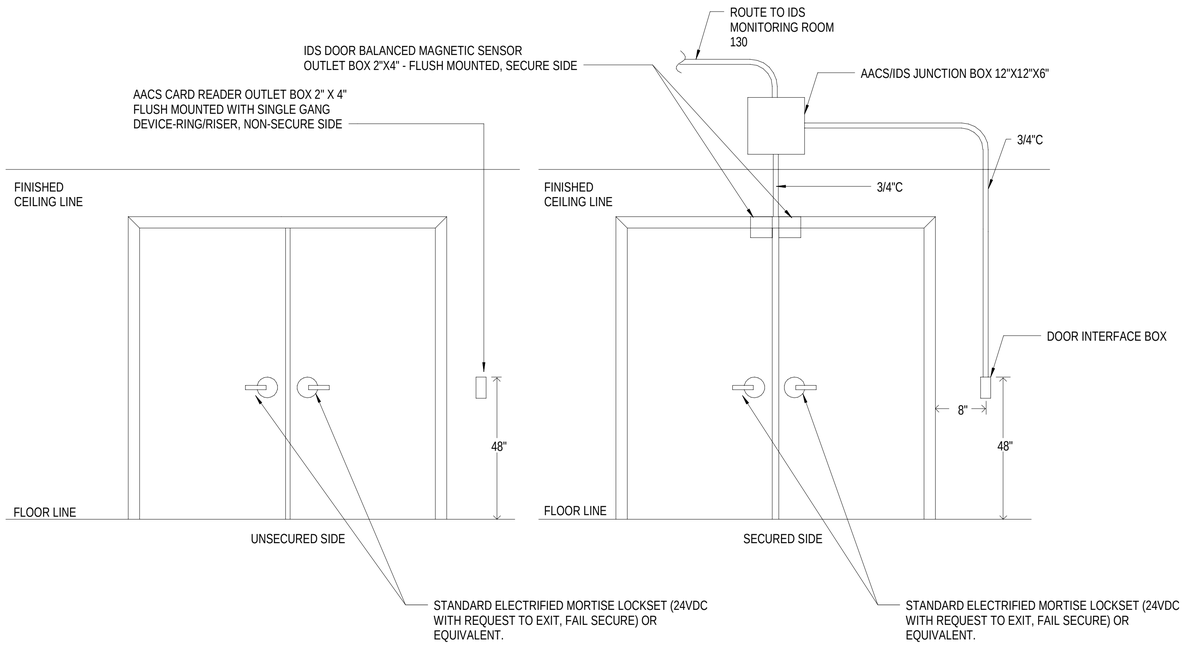

A1 DOUBLE DOOR WITH CARD READER
NTS

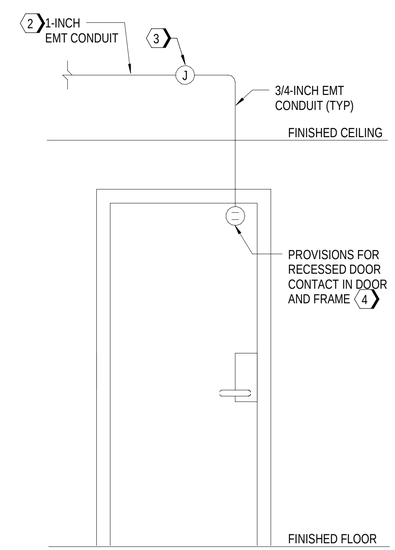

A4 MONITORED SINGLE DOOR
NTS

SHEET KEYNOTES

1. NOT USED
2. ROUTE CONDUIT TO SECURITY WIREWAY LOCATED ON SAME FLOOR AS DOOR.
3. 6-INCH X 6-INCH X 4-INCH DEEP BOX WITH BLANK COVER RECESS WITHIN 24-INCHES ABOVE DOOR.
4. ALL SECURITY DOORS MUST BE PREPPED TO ACCEPT RECESSED BMS OR MAGNETIC SWITCHES REFERENCE ARCHITECTURAL DOOR HARDWARE SCHEDULE.
5. ELECTRIFIED LOCKSET OR EXIT WITH INTEGRAL REQUEST TO EXIT CONTACT.

SYM	DESCRIPTION	DATE	APPR

NAVFAC

REGISTERED COMMUNICATIONS DISTRIBUTION DESIGNER 61231BICSI Bicsi Rene Rubio BICSI ID #112613 EXPIRES 12-31-26 RCDD SEAL

Jacobs
1100 NORTH GLEBE ROAD
SUITE 500
ARLINGTON, VIRGINIA 22201
571.218.1000
FAX: 571.218.1600
A/E INFO

APPROVED
FOR COMMANDER NAVFAC
ACTIVITY: APPROVED BY LCDR ELIZABETH OLOKODE NAVFAC NLON FEAD DIRECTOR NEW LONDON, GROTON, CT
SATISFACTORY TO DATE 05/27/2025

DES	MG	DRW	LA	CHK	RR
PM/DM	SDS / RSF				
BRANCH MANAGER	WRB				
CHIEF ENG/ARCH	JWJ				
FIRE PROTECTION	HPN				

DEPARTMENT OF THE NAVY
NAVAL FACILITIES ENGINEERING SYSTEMS COMMAND
NAVAL FACILITIES ENGINEERING SYSTEMS COMMAND - MID-ATLANTIC
MID-ATLANTIC
NAVAL STATION - NORFOLK, VA
NAVAL SUBMARINE BASE NEW LONDON
GROTON, CONNECTICUT
P-1102 WEAPONS MAGAZINE & ORDNANCE OPERATIONS FACILITY
OPERATIONS
SECURITY DETAILS

SCALE: AS NOTED
EPROJECT NO.: 1667770
CONSTR. CONTR. NO.
NAVFAC DRAWING NO. 12894087
SHEET 137 OF 140
TY502

6/20/2025 1:15:29 PM TY502
\\bc1vs01\Hdqp\PDZE1628\TE ELE\BLDG-1667770-T-BIM_v21.rvt

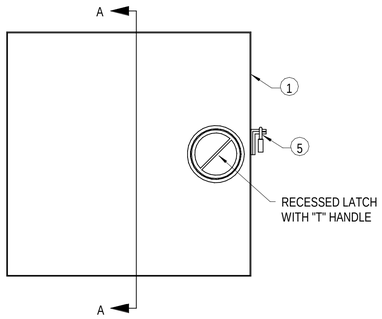

FRONT VIEW

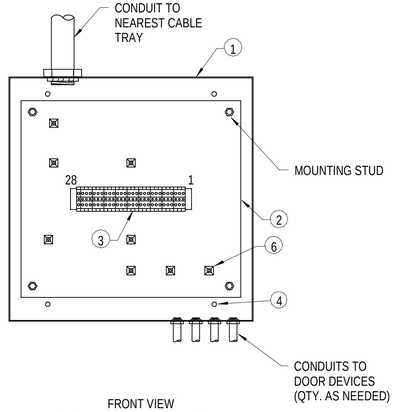

FRONT VIEW
SHOWN WITH COVER REMOVED

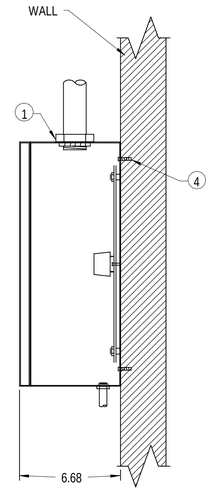

SECTION "A-A"

NOTES:

1. 16"X16"X6" ENCLOSURE (PROVIDED IN MILCON PACKAGE)
2. BACK PLATE, ORDERED WITH ENCLOSURE.
3. 9 (27 TERMINATIONS POINTS), 3 POSITION TERMINAL BLOCKS AND 1 (1 TERMINATION POINT) 1 POSITION TERMINAL BLOCK FOR THE TERMINATION OF CABLES FROM ACP AND DOOR DEVICES (REFER TO CABLE TERMINATIONS SCHEDULE ON SHEET TY001). NOTE: CARD READER CABLES DO NOT TERMINATE IN THIS CABINET AND PASS DIRECTLY THROUGH TO THE CARD READER(S) MOUNTED BELOW.
4. 1/4" MOUNTING HARDWARE, SELECTED AND SIZED PER MOUNTING SURFACE (QTY. AS REQUIRED).
5. PADLOCK KIT AND PADLOCK
6. SCREW MOUNT CABLE TIE HOLDER AND #6 SELF-TAPPING SCREW (QTY AS REQUIRED)

C1 DOOR INTERFACE BOX (DIB) DETAIL

NTS

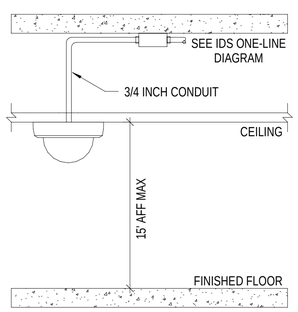

A1 CEILING MOUNTED MOTION SENSOR

NTS

SYM	DESCRIPTION	DATE	APPR

NAVFAC

REGISTERED COMMUNICATIONS DISTRIBUTION DESIGNER
6128318085
Bicsi
Rene Rubio
BICSI ID #112613
EXPIRES 12-31-26
RCDD
SEAL

Jacobs
1100 NORTH GLEBE ROAD
SUITE 500
ARLINGTON, VIRGINIA 22201
571.218.1000
FAX: 571.218.1600

A/E INFO

APPROVED
FOR COMMANDER NAVFAC

ACTIVITY:
APPROVED BY LCDR ELIZABETH
OLOKODE NAVFAC NLON FEAD
DIRECTOR NEW LONDON, GROTON, CT

SATISFACTORY TO DATE 05/27/2025

DES	DRW	CHK
MG	LA	RR

PM/DM	SDS / RSF
BRANCH MANAGER	WRB
CHIEF ENG/ARCH	JWJ
FIRE PROTECTION	HPN

DEPARTMENT OF THE NAVY
NAVAL FACILITIES ENGINEERING SYSTEMS COMMAND
MID-ATLANTIC
NAVAL FACILITIES ENGINEERING SYSTEMS COMMAND - MID-ATLANTIC
NAVAL STATION - NORFOLK, VA
NAVAL SUBMARINE BASE NEW LONDON
GROTON, CONNECTICUT
P-1102 WEAPONS MAGAZINE & ORDNANCE OPERATIONS FACILITY
OPERATIONS
SECURITY DETAILS

SCALE: AS NOTED
EPROJECT NO.: 1667770
CONSTR. CONTR. NO.
NAVFAC DRAWING NO. 12894088
SHEET 138 OF 140

TY503

6/20/2025 1:15:34 PM TY503
\\dc1vs01\Redp\PDZE\6280\TELE\BLDG-1667770-T-BIM_v21.rvt

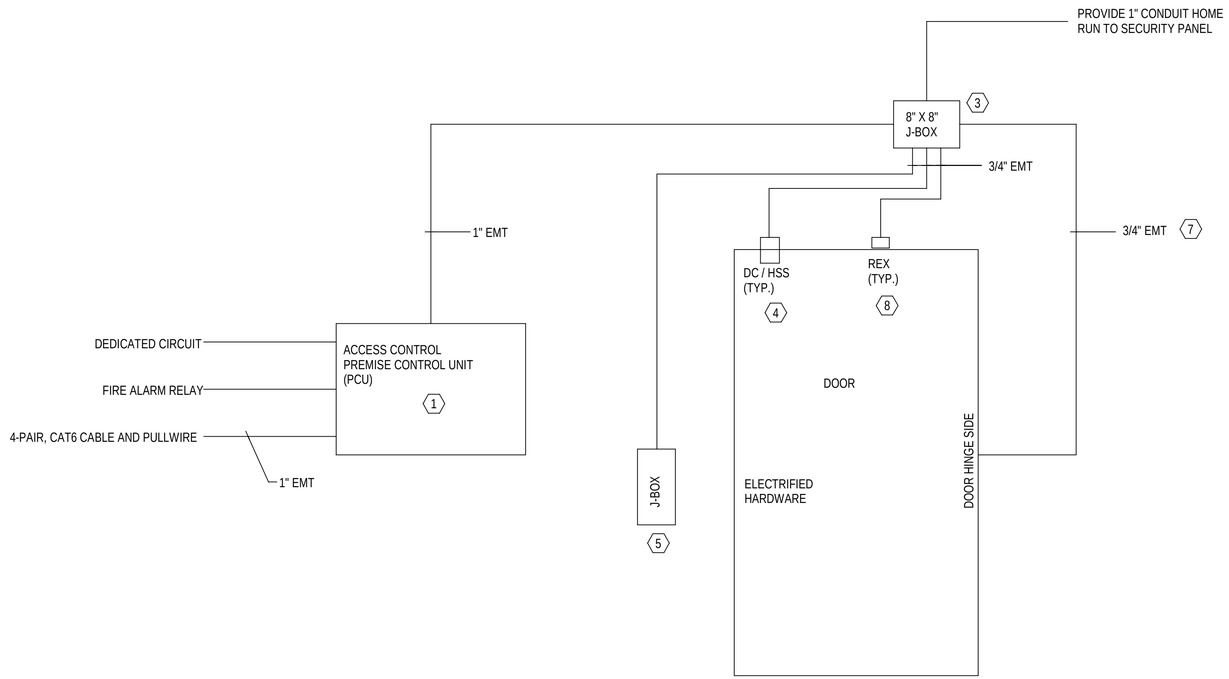

C1 TYPICAL ACESS CONTROL SYSTEM (SINGLE DOOR)
NTS

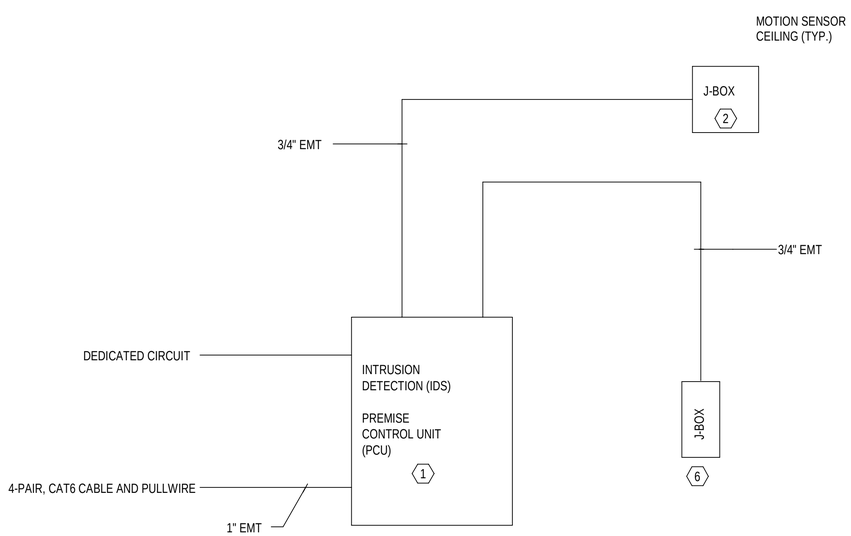

A1 TYPICAL INTRUSTION DETECTION SYSTEM DETAIL
NTS

GENERAL SHEET NOTES

1. SEE SHEET TY-001 FOR GENERAL NOTES, SYMBOLS AND ABBREVIATIONS.
2. ALL CONDUIT IS 3/4" EMT CONDUIT WITH COMPRESSION FITTINGS U.N.O. STATED. PULLSTRING INSTALLED WITH EACH CONDUIT.
3. CONDUIT RUNS SHOWN BETWEEN SYSTEM COMPONENTS ARE SCHEMATIC ONLY.
4. ALL CONDUIT MUST BE MOUNTED BEHIND WALLS, AND JUNCTION BOXES MUST BE RECESSED INTO BOTH THE WALL AND CEILING.
5. ALL JUNCTION BOXES MUST BE PROVIDED WITH COVER PLATES.

SHEET KEYNOTES

1. PROVIDE PCU PANEL. COORDINATE ELECTRICAL JUNCTION BOX WITHIN PANEL BACKPLANE FOR HARDWIRED 110VAC POWER
2. A 4" FLUSH MOUNT OCTOGONAL JUNCTION BOX MOUNTED ON CEILING FOR LOCATION OF PASSIVE MOTION SENSOR. NO BOX SHALL BE CLOSER TO 36" FROM EITHER AN AIR DUCT OR A LIGHT FIXTURE.
3. 8"X8" JUNCTION BOX MOUNTED ABOVE CEILING 6" ABOVE LATCH SIDE OF THE DOOR.
4. BALANCED MAGNETIC SWITCH ACTUATING MAGNET OR HIGH SECURITY SWITCH.
5. 2"X4" BACKBOX FOR CARD READER OR KEYPAD CARD READER RECESSED JUNCTION BOX MOUNTED 42" AFF.
6. 2"X4" BACKBOX FOR KEYPAD IDS SYSTEM RECESSED JUNCTION BOX MOUNTED 42" AFF.
7. 3/4" FLEX CONDUIT ROUTED DOWN DOOR FRAME TO POWER TRANSFER HINGE.
8. 3/4" FLEX CONDUIT TO EXTERNAL REX READER. (NOTE: NOT REQUIRED IF ELECTRIFIED HARDWARE HAS INTERNAL REX.) COORDINATE DESIGN WITH OWNER PRIOR TO ROUGH-IN.

SYM	DESCRIPTION	DATE	APPR

NAVFAC

REGISTERED COMMUNICATIONS DISTRIBUTION DESIGNER
6123180085
Bicsi
Rene Rubio
BICSI ID #112613
EXPIRES 12-31-26
RCDD
SEAL

Jacobs
1100 NORTH GLEBE ROAD
SUITE 500
ARLINGTON, VIRGINIA 22201
571.218.1000
FAX: 571.218.1600
A/E INFO

APPROVED
FOR COMMANDER NAVFAC
ACTIVITY
APPROVED BY LCDR ELIZABETH
OLOKODE NAVFAC NLON FEAD
DIRECTOR NEW LONDON, GROTON, CT
SATISFACTORY TO DATE 05/27/2025

DES	DRW	CHK
MG	LA	RR

PM/DM	SDS / RSF
BRANCH MANAGER	WRB
CHIEF ENG/ARCH	JWJ
FIRE PROTECTION	HPN

DEPARTMENT OF THE NAVY
NAVAL FACILITIES ENGINEERING SYSTEMS COMMAND
MID-ATLANTIC
NAVAL FACILITIES ENGINEERING SYSTEMS COMMAND - MID-ATLANTIC
NAVAL STATION - NORFOLK, VA
NAVAL SUBMARINE BASE NEW LONDON
GROTON, CONNECTICUT
P-1102 WEAPONS MAGAZINE & ORDNANCE OPERATIONS FACILITY
OPERATIONS
SECURITY DETAILS

SCALE: AS NOTED
EPROJECT NO.: 1667770
CONSTR. CONTR. NO.
NAVFAC DRAWING NO.
12894324
SHEET 139 OF 140
TY504

6/20/2025 1:15:38 PM TY504
\\bk1vs01\Revit\PFDZE1628\TEELEBLDG-1667770-T-BIM_v21.rvt

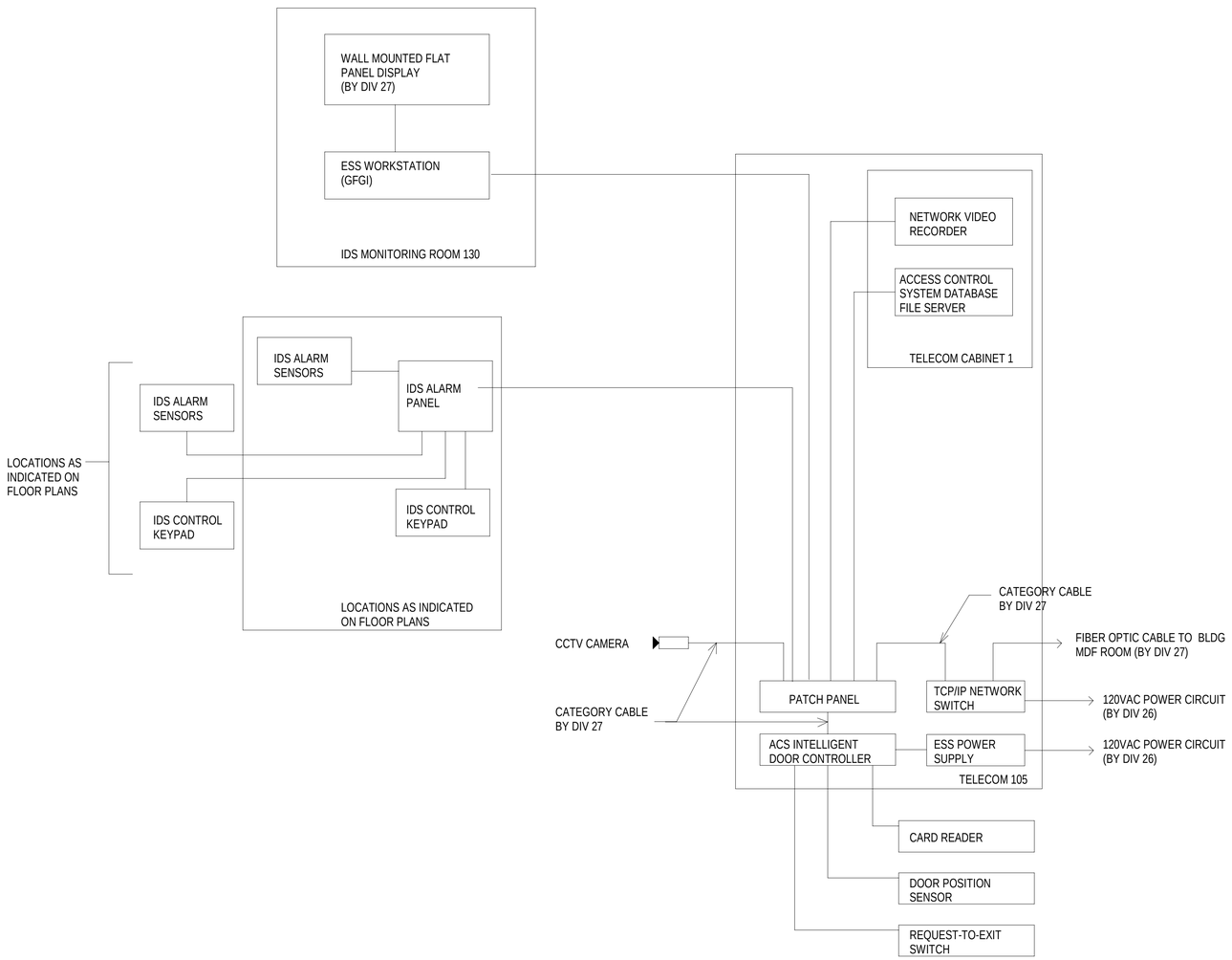

A1 SECURITY SCHEMATIC DESIGN

NTS

SYM	DESCRIPTION	DATE	APPR

NAVFAC

REGISTERED COMMUNICATIONS DISTRIBUTION DESIGNER
6123/1BCBS
BICSI
Rene Rubio
BICSI ID #112613
EXPIRES 12-31-26
RCDD
SEAL

Jacobs
1100 NORTH GLEBE ROAD
SUITE 500
ARLINGTON, VIRGINIA 22201
571.218.1000
FAX: 571.218.1600
A/E INFO

APPROVED
FOR COMMANDER NAVFAC

ACTIVITY:
APPROVED BY LCDR ELIZABETH OLOKODE NAVFAC NLON FEAD DIRECTOR NEW LONDON, GROTON, CT

SATISFACTORY TO DATE 05/27/2025

DES	MG	DRW	LA	CHK	RR

PM/DM SDS / RSF
BRANCH MANAGER WRB
CHIEF ENG/ARCH JWJ
FIRE PROTECTION HPN

DEPARTMENT OF THE NAVY
NAVAL FACILITIES ENGINEERING SYSTEMS COMMAND
MID-ATLANTIC
NAVAL FACILITIES ENGINEERING SYSTEMS COMMAND - MID-ATLANTIC
NAVAL STATION - NORFOLK, VA
NAVAL SUBMARINE BASE NEW LONDON
GROTON, CONNECTICUT
P-1102 WEAPONS MAGAZINE & ORDNANCE OPERATIONS FACILITY
OPERATIONS
SECURITY SCHEMATIC DESIGN

SCALE: AS NOTED
EPROJECT NO.: 1667770
CONSTR. CONTR. NO.
NAVFAC DRAWING NO. 12894323
SHEET 140 OF 140
TY601

6/20/2025 1:15:42 PM TY601
\\dc1vs01\bdpj\PDZE1628\TELE\BLDG-1667770-T-BIM_v21.rvt