GENERAL NOTES:

1. WHERE "SPLIT CIRCUIT" IS INDICATED, EXTEND SPLIT CIRCUIT HOME RUNS TO A COMMON JUNCTION BOX ABOVE THE PANEL INDICATED. TIE HOME RUNS TOGETHER USING SPLICE KIT AND EXTEND A SINGLE SET OF CONDUCTORS TO CIRCUIT BREAKER NUMBER INDICATED. WIRING USED IN SPLIT CIRCUITS MUST BE THE SAME SIZE.
2. THE ELECTRICAL DRAWINGS ARE DIAGRAMMATICAL IN NATURE AND INDICATE THE GENERAL LOCATION OF OUTLETS, EQUIPMENT, AND THE CIRCUIT ARRANGEMENT OF THE REQUIRED WIRING. ALTHOUGH THE DRAWINGS DO NOT NECESSARILY INDICATE THE ACTUAL ROUTES OF SURFACE MOUNTED CONDUITS, WHERE INDICATED, THEY MUST BE FOLLOWED AS CLOSELY AS COORDINATION WITH THE WORK OF OTHER TRADES AND SPACE WILL PERMIT. WHERE CONDUIT RUNS ARE NOT SHOWN ON THE DRAWINGS, SUCH AS FOR MECHANICAL EQUIPMENT, COORDINATE CONDUIT RUNS WITH THE WORK OF OTHER TRADES AND STRUCTURE. SIMPLIFY INSTALLATION WHEREVER POSSIBLE, BUT SUBJECT TO APPROVAL BY THE COR FOR VISUAL AND STRUCTURAL REASONS. IT IS NOT WITHIN THE SCOPE OF THE DRAWINGS TO SHOW EVERY NECESSARY OFFSETS, BENDS, PULL BOXES, AND OBSTRUCTIONS. THE DRAWINGS ARE NOT INTENDED TO BE SCALED, REFER TO THE ARCHITECTURAL DRAWINGS FOR DIMENSIONS.
3. NOT EVERY SYMBOL SHOWN IN LEGENDS ARE USED - SEE DRAWINGS FOR APPLICABLE DEVICES.
4. MOUNTING HEIGHTS INDICATED AS '+##' ARE MEASURED FROM FINISHED FLOOR UNLESS OTHERWISE NOTED.
5. PROVIDE LABELS DENOTING EQUIPMENT SERVED AND CORRESPONDING CIRCUIT NUMBER ON DEDICATED RECEPTACLES.
6. SEAL PENETRATIONS OF FIRE- AND/OR SMOKE-RATED CONSTRUCTION WITH U.L. APPROVED STOPPING MATERIAL TO RESTORE THE ORIGINAL RATING OF THE PENETRATED CONSTRUCTION.
7. SEAL PENETRATIONS OF NON-RATED PARTITIONS WITH APPROVED MATERIAL TO PREVENT AIRFLOW AND DEBRIS.
8. MOUNTING HEIGHTS SHOWN ON ELECTRICAL, COMMUNICATIONS, AND SYSTEMS DRAWINGS ARE FOR BIDDING PURPOSES ONLY. REFER TO INTERIOR ELEVATION DRAWINGS FOR MOUNTING HEIGHTS OF DEVICES AND EQUIPMENT. WHERE DISCREPANCIES OCCUR, INTERIOR ELEVATIONS TAKE PRECEDENCE.
9. SUPPORT BOXES AND CONDUIT ABOVE CEILING INDEPENDENTLY. DO NOT SUPPORT FROM SUSPENDED CEILING SYSTEM.
10. WHERE CONCEALED BY INACCESSIBLE FINISHES, PROVIDE ACCESS DOORS FOR JUNCTION & PULL BOXES, CONTROL DEVICES & EQUIPMENT, DISCONNECT SWITCHES, AND OTHER ITEMS REQUIRING SERVICE, MAINTENANCE, OPERATION, OR ADJUSTMENT. SIZE AND LOCATE ACCESS DOORS FOR EASE OF PERFORMANCE OF THE FUNCTION INTENDED. DOORS MUST NOT BE SMALLER THAN 18" x 18". COORDINATE LOCATION OF ACCESS DOORS WITH AFFECTED TRADES. SUBMIT PANEL LOCATIONS FOR APPROVAL BY THE ARCHITECT PRIOR TO INSTALLATION.
11. PROVIDE ADJACENT DEVICES UNDER A COMMON FACEPLATE, WITH NO MORE THAN FOUR DEVICES IN A SINGLE FACEPLATE. WHERE MORE THAN FOUR ADJACENT DEVICES ARE PRESENT, EVENLY DIVIDE DEVICES INTO SEPARATE GROUPS OF NO LESS THAN TWO DEVICES PER GROUP. PROVIDE BARRIERS WITHIN BOXES TO SEPARATE DEVICES WHERE DIFFERENT CIRCUITS AND DIFFERENT VOLTAGES ARE PRESENT.
12. PROVIDE LUGS AS NECESSARY FOR TERMINATING OVERSIZED CONDUCTORS OR OTHERWISE MAKE PROVISIONS FOR TERMINATING OVERSIZED CONDUCTORS IN DEVICES WHOSE LUGS DO NOT ACCEPT THE OVERSIZED CONDUCTOR SIZE.
13. SHARED NEUTRAL CONDUCTORS ARE PROHIBITED.
14. OUTAGES MUST BE SCHEDULED WITH A MINIMUM OF 21 CALENDAR DAYS IN ADVANCE. NOTIFY THE BASE PERSONNEL (CONTRACTING OFFICER). MAKE AN APPLICATION FOR OUTAGES TO GOVERNMENT HIGH VOLTAGE FACILITY DEPARTMENT WITH THE PROVIDED REQUEST FORMS AND SUBMIT FOR APPROVAL FOR THE OUTAGES. NO OUTAGES WILL TAKE PLACE WITHOUT WRITTEN AUTHORIZATION TO THE GOVERNMENT PERSONNEL BY THE CONTRACTOR. OUTAGES CAN BE CANCELED BY THE GOVERNMENT UP UNTIL THE SCHEDULED TIME OF THE OUTAGE. OUTAGES MUST BE COORDINATED WITH THE GOVERNMENT PERSONNEL (CONTRACTING OFFICER) TO MINIMIZE TOTAL OUTAGES TO THE FACILITY.
15. ADJUST WIRE SIZES TO COMPENSATE FOR VOLTAGE DROP. THE LENGTH OF A SINGLE PHASE 20A CIRCUIT (ONE-WAY) MUST NOT EXCEED THE FOLLOWING VALUES (BASED ON 16A LOAD):

CONDUCTOR SIZE (AWG)	MAXIMUM 120V CIRCUIT LENGTH	MAXIMUM 277V CIRCUIT LENGTH
#12	60'-0"	135'-0"
#10	90'-0"	210'-0"
#8	140'-0"	330'-0"
#6	225'-0"	525'-0"

MOUNTING HEIGHT SCHEDULE

DEVICES/EQUIPMENT	MOUNTING HEIGHT (AFF)	MEASURED TO:
RECEPTACLES	AS INDICATED ON LEGEND/PLANS	CENTER
TOGGLE SWITCHES	4'-0"	CENTER
WALL DIMMERS	4'-0"	CENTER
MANUAL MOTOR STARTERS	4'-0"	CENTER
OCCUPANCY SENSORS - WALL MOUNTED	4'-0"	CENTER
LIGHTING CONTROL PANEL	6'-6"	TOP
LIGHTING CONTROL STATION	4'-0"	CENTER
JUNCTION BOXES	AS INDICATED ON LEGEND/PLANS	CENTER
MONITORING/CONTROL PANEL	5'-0"	TOP
SURFACE METAL RACEWAYS	AS INDICATED ON LEGEND/PLANS	TOP
PANELBOARDS	6'-6"	TOP
DISCONNECT SWITCHES	5'-0"	TOP
AUTOMATIC TRANSFER SWITCHES	6'-6"	TOP
MANUAL TRANSFER SWITCHES	6'-6"	TOP
CONTROL STATIONS	6'-6"	TOP
SPD (NON-INTEGRAL)	6'-0" (NTE)	TOP
MAGNETIC MOTOR CONTROLLERS	6'-6"	TOP
LIGHTING CONTACTORS ENCLOSURES	6'-6"	TOP
INDIVIDUAL CKT BREAKERS ENCLOSURES	6'-6"	TOP
EMERGENCY POWER OFF SWITCHES	5'-6"	CENTER
TIME SWITCHES	6'-6"	TOP
TELECOMMUNICATIONS OUTLETS	1'-6"	CENTER
TELECOMMUNICATIONS OUTLETS - OVER COUNTER	6"	CENTER (OVER TOP OF COUNTER)
GROUND FAULT CIRCUIT INTERRUPTER	4'-0"	CENTER
GROUND BUS BARS	2'-0"	CENTER
INTEGRATED COMMUNICATIONS PANELS	6'-0"	TOP
GENERATOR REMOTE ALARM ANNUNCIATOR	5'-0"	TOP
GENERATOR TERMINAL BLOCKS	5'-0"	TOP
BAS TERMINAL BLOCKS	5'-0"	TOP
GENERATOR STOP SWITCH	5'-6"	CENTER
GENERATOR TANK FUEL LEVEL INDICATORS	5'-0"	TOP
UPS REMOTE MONITORING PANEL	5'-0"	TOP
UPS BATTERY MONITORING / CONTROL PANEL	5'-0"	TOP
MAIN SWITCHGEAR BATTERY CHARGER	5'-0"	TOP
RELAY CONTROL PANELS	6'-6"	TOP

MOUNTING HEIGHT SCHEDULE NOTES:

1. USE ABOVE INDICATED MOUNTING HEIGHTS UNLESS INDICATED OTHER WISE ON DRAWINGS OR SPECIFICATIONS.
2. COORDINATE MOUNTING HEIGHTS WITH FIELD CONDITIONS, OTHER TRADES, AND RELATED EQUIPMENT.
3. REDUCE MOUNTING HEIGHTS OF FIRE ALARM VISUAL AND AUDIO/VISUAL ALARMS WHERE REQUIRED TO MAINTAIN 6" MINIMUM SPACING FROM CEILING.

SYM	DESCRIPTION	DATE	APPR

NAVFAC

COMMONWEALTH OF VIRGINIA
KELLEY BOURASSA
LIC. NO. 0402061759
6/23/2025
PROFESSIONAL ENGINEER
SEAL

Jacobs
1100 NORTH GLEBE ROAD
SUITE 500
ARLINGTON, VIRGINIA 22201
571.218.1000
FAX: 571.218.1600
A/E INFO

APPROVED
FOR COMMANDER NAVFAC
ACTIVITY
APPROVED BY LCDR ELIZABETH OLOKODE NAVFAC NLON FEAD DIRECTOR NEW LONDON, GROTON, CT
SATISFACTORY TO DATE 05/27/2025

DES JHP	DRW JHP	CHK KB	
PM/DM			SMS/CWJ
BRANCH MANAGER			WRB
CHIEF ENG/ARCH			JWJ
FIRE PROTECTION			HPN

DEPARTMENT OF THE NAVY
NAVAL FACILITIES ENGINEERING SYSTEMS COMMAND
MID-ATLANTIC
NAVAL FACILITIES ENGINEERING SYSTEMS COMMAND - MID-ATLANTIC
NAVAL STATION, NORFOLK, VA
NAVAL SUBMARINE BASE NEW LONDON
GROTON, CONNECTICUT
P-1102 WEAPONS MAGAZINE & ORDNANCE OPERATIONS FACILITY
SENTRY
ELECTRICAL GENERAL NOTES

SCALE: AS NOTED
EPROJECT NO.: 1667770
CONSTR. CONTR. NO.
NAVFAC DRAWING NO. 12894131
SHEET 43 OF 65
E-001

6/19/2025 5:02:37 PM E-001
\\DC1-vol01\Redgn\PDZE1E1G8\ELEC\BLDG-1667770-E-BIM_SENTRY_v21.rvt

A

A, AMP	AMPERE
AA	AMBIENT AIR
ABBREV	ABBREVIATION
ABV	ABOVE
AC	ALTERNATING CURRENT
ACC	ACCESS CONTROL
ACT	ABOVE COUNTER TOP
AF	AMPERE FRAME, AMPERE FUSE
AFC	ABOVE FINISHED CEILING
AFF	ABOVE FINISHED FLOOR
AFG	ABOVE FINISHED GRADE
AHU	AIR HANDLING UNIT
AI	ANALOG INPUT
AIC	AMPERE INTERRUPTING CURRENT
AL	ALUMINUM
AM	AMPERE METER
ANN	ANNUNCIATOR
ANSI	AMERICAN NATIONAL STANDARDS INSTITUTE
AO	ANALOG OUTPUT
AP	ANNUNCIATOR POINT
AS	AMETER SWITCH
ASYM	ASYMMETRICAL
AT	AMPERE TRIP
ATS	AUTOMATIC TRANSFER SWITCH
ATX	AUTO TRANSFORMER
AV	AUDIO VISUAL
AVG	AVERAGE
AWG	AMERICAN WIRE GAUGE

B

BAS	BUILDING AUTOMATION SYSTEM
BATT	BATTERY, BATTERIES
BB	BACKBONE
BC	BARE COPPER
BKR	BREAKER
BLDG	BUILDING
BMS	BALANCED MAGNETIC SWITCH
BOC	BOTTOM OF CONDUIT
BOT	BOTTOM OF TRAY

C

*C	CELSIUS
C	CONDUIT, COIL
CAT. NO, CAT	CATALOG
CBM	CERTIFIED BALLAST MANUFACTURER
CCTV	CLOSED CIRCUIT TELEVISION CAMERA
CEG	COMMON EQUIPMENT GROUND
CFM	CUBIC FEET PER MINUTE
CKT	CIRCUIT
CLF	CURRENT LIMITING FUSE
CLO	CLOSET
cm	CENTIMETER
CMS	COMBINATION MOTOR STARTER
COMPT	COMPARTMENT
COND	CONDUIT
CONT	CONTINUOUS, CONTINUED
CPT	CONTROL POWER TRANSFORMER
CPU	CENTRAL PROCESSING UNIT
CRAC	COMPUTER ROOM AIR CONDITIONING UNIT
CRI	COLOR RENDERING INDEX
CSCCN	CENTRAL SCIENTIFIC COMMUNICATIONS NETWORK
CT	CURRENT TRANSFORMER
CU	COPPER COEFFICIENT OF UTILIZATION
CY	CYCLES

D

D	DEPTH, DEEP
DB	DUCT BANK
DC	DIRECT CURRENT
DEPT	DEPARTMENT
DESIG	DESIGNATION
DIA	DIAMETER
DISC	DISCONNECT
DIST, DISTRIB	DISTRIBUTION
DIV	DIVISION
DPDT	DOUBLE POLE - DOUBLE THROW
DPST	DOUBLE POLE - SINGLE THROW
DS, DSW	DISCONNECT SWITCH
DWG	DRAWING

E

(E), EX	EXISTING
E	EMPTY
EGC	EQUIPMENT GROUNDING CONDUCTOR
EL, ELEV	ELEVATION
ELEC	ELECTRICAL / ELECTRIC
EM, EMER	EMERGENCY
EMH	EXISTING MANHOLE, ELECTRICAL MANHOLE
EMO	EMERGENCY MANUAL OFF
EMS	EMERGENCY MANAGEMENT SYSTEM
EMT	ELECTRICAL METALLIC TUBING
ENT	ELECTRICAL NON-METALLIC TUBING
EO	ELECTRICALLY OPERATED
EOL	END OF LIFE
EPO	EMERGENCY POWER OFF
EPP	EXISTING POWER POLE
EPR	ETHYLENE-PROPYLENE RUBBER
EQPT	EQUIPMENT
ES	ENERGY SAVING
ET	ELECTRONIC TRIP
ETC	ETCETERA
ETL	ELECTRICAL TESTING LABORATORIES
EW	EACH WAY
EWC	ELECTRIC WATER COOLER
EWH	ELECTRIC WATER HEATER
EXST	EXISTING, EXHAUST

F

(F)	FUTURE
F	FAHRENHEIT
FA	FORCED AIR, FIRE ALARM
FBO	FURNISHED BY OTHERS, FURNISHED BY OWNER
FC	FLEXIBLE CONDUIT
FDR	FEEDER
FFE	FINISHED FLOOR ELEVATION
FIXT	FIXTURE
FL	FOOT LAMBERTS
FLR	FLOOR
FLUOR	FLUORESCENT
FREQ	FREQUENCY
FRP	FIBERGLASS-REINFORCED POLYESTER
FT	FOOT
FU	FUSE
FUT	FUTURE
FVNR	FULL VOLTAGE NON-REVERSING
FVR	FULL VOLTAGE REVERSING
FWE	FURNISHED WITH EQUIPMENT

G

g	GRAM
G, GND	GROUND
GA	GAUGE
GALV	GALVANIZED
GEC	GROUNDING ELECTRODE CONDUCTOR
GEN	GENERATOR
GFCI	GROUND FAULT EQUIPMENT PROTECTIVE DEVICE
GFE	GOVERNMENT FURNISHED EQUIPMENT, CONTRACTOR INSTALLED
GFEPD	GROUND FAULT EQUIPMENT PROTECTIVE DEVICE
GFP	GROUND FAULT PROTECTION
GFR	GROUND FAULT RELAY
GP	GENERAL PURPOSE

H

H	HEIGHT, HORN
HALOG	HALOGEN
HE	HIGH EXPOSURE
HH	HANDHOLE
HID	HIGH INTENSITY DISCHARGE
HORIZ	HORIZONTAL
HP	HORSEPOWER
HPF	HIGH POWER FACTOR
HPS	HIGH PRESSURE SODIUM
HRG	HIGH RESISTANCE GROUND
HVAC	HEATING, VENTILATING AND AIR CONDITIONING
HZ	HERTZ

I

IAW	IN ACCORDANCE WITH
ICEA	INSULATED CABLE ENGINEERS ASSOCIATION
IDS	INTRUSION DETECTION SYSTEM
IEC	INTERNATIONAL ELECTROTECHNICAL COMMISSION
IEEE	INSTITUTE OF ELECTRICAL AND ELECTRONICS ENGINEERS
IESCR	INTEGRATED EQUIPMENT SHORT CIRCUIT RATING
IESNA, IES	ILLUMINATING ENGINEERING SOCIETY OF NORTH AMERICA
IG	ISOLATED GROUND
IMC	INTERMEDIATE METAL CONDUIT
INC, INCAND	INCANDESCENT
INST	INSTRUCTIONS, INSTUMENT / INSTRUMENTATION
INTER	INTERMEDIATE

J

J, JB	JUNCTION BOX

K

*K	DEGREES KELVIN
K	KEY INTERLOCK
KA	KILO-AMPERES
KCM, KCMIL	1000 CIRCULAR MILS
KG	KILO-GRAM
KM	KILO-METER
KV	KILO-VOLTS
KVA	KILO-VOLT-AMPERES
KVAC	KILO-VOLT-AMPERES CONNECTED
KVAD	KILO-VOLT-AMPERES DEMAND
KW	KILOWATT
KWD	KILOWATT DEMAND

L

L	LUMEN, LENGTH
LA	LIGHTNING ARRESTER
LAN	LOCAL AREA NETWORK
LB	POUND
LED	LIGHT EMITTING DIODE
LPF	LOW POWER FACTOR
LRG	LOW RESISTANCE GROUND
LSM	LONG-TIME/SHORT TIME TRIP
LSI	LONG-TIME/SHORT TIME/INSTANTANEOUS TRIP
LSIG	LONG-TIME/SHORT TIME/INSTANTANEOUS/GROUND FAULT TRIP
LSIGM	LONG-TIME/SHORT TIME/INSTANTANEOUS/GROUND FAULT TRIP AND METERING
LSIM	LONG-TIME/SHORT TIME/INSTANTANEOUS TRIP AND METERING
LT	LIQUID TIGHT
LTG	LIGHTING
LTS	LIGHTS
LV	LOW VOLTAGE
LVR	LOW VOLTAGE RELAY

M

m	METER
M/G	MOTOR / GENERATOR
MAX	MAXIMUM
MC	METAL-CLAD CABLE
MCB	MAIN CIRCUIT BREAKER
MCC	MOTOR CONTROL CENTER
MCCB	MOLDED CASE CIRCUIT BREAKER
MECH	MECHANICAL
MEZZ	MEZZANINE
MFR	MANUFACTURER
MH	MOUNTING HEIGHT, MAN HOLE
MHL	METAL HALIDE LAMP
MI	MINERAL INSULATED
MIN	MINIMUM
MIP	MEDICAL ISOLATION PANEL
MLO	MAIN LUGS ONLY
mm	MILLIMETER
MO	MECHANICALLY OPERATED, MOTOR OPERATOR
MP	MOTOR PROTECTOR
MS	MASTER SUBSTATION, MOTOR STARTER
MSP	MOTOR STARTER PANEL
MT	MOUNT
MTD	MOUNTED
MTG	MOUNTING
MTTOE	MOUNTED TO TOP OF EQUIPMENT
MV	MEDIUM VOLTAGE

N

(N)	NEW
N, NEUT	NEUTRAL
NC	NORMALLY CLOSED
NO	NORMALLY OPEN
NOL	NON-OVERLOAD
NA	NOT APPLICABLE
NEC	NATIONAL ELECTRICAL CODE
NEMA	NATIONAL ELECTRICAL MANUFACTURERS ASSOCIATION
NIC	NOT IN CONTRACT
NO.	NUMBER
NPF	NORMAL POWER FACTOR
NPT	NATIONAL PIPE THREAD
NTE	NOT TO EXCEED
NTS	NOT TO SCALE

O

OC	ON CENTER
OL	OVERLOAD
OFCI	OWNER FURNISHED, CONTRACTOR INSTALLED
OFE	OWNER FURNISHED EQUIPMENT, CONTRACTOR INSTALLED
OFOI	OWNER FURNISHED, OWNER INSTALLED
OPT	OPTIONAL

P

P	POLE, POWER
PB	PRIVATE BRANCH EXCHANGE
PBRD	PANELBOARD
PCC	POINT OF COMMON COUPLING
PDP	POWER DISTRIBUTION PANEL
PDU	POWER DISTRIBUTION UNIT
PF	POWER FACTOR
PH	PHASE
PLC	PROGRAMMABLE LOGIC CONTROLLER
PMCS	POWER MONITORING AND CONTROL SYSTEM
PNL	PANEL
PT	POTENTIAL TRANSFORMER
PVC	POLYVINYL CHLORIDE

Q

QTY	QUANTITY

R

%R	PERCENT RESISTANCE
(R)	RELOCATE
R	RESISTANCE, RATE, RISE
R/I	RECTIFIER / INVERTER
RCPT	RECEPTACLE
RCR	ROOM CAVITY RATIO
REQD	REQUIRED
RFI	RADIO FREQUENCY INTERFERENCE
RGS	RIGID GALVANIZED STEEL
RM	ROOM
RMS	ROOT MEAN SQUARE
RQD	REQUIRED
RVAT	REDUCED VOLTAGE AUTOTRANSFORMER
RVNR	REDUCED VOLTAGE NON-REVERSING
RVR	REDUCED VOLTAGE REVERSING

S

S	SPEAKER
S/MH	SPACING TO MOUNTING HEIGHT RATIO
SC	SHORT CIRCUIT
SCHED	SCHEDULE
SE	SERVICE ENTRANCE
SEC	SECONDS
SECT	SECTION
SES	SERVICE ENTRANCE SUBSTATION
SHLD	SHIELDED, SHIELD
SKVA	STARTING KILO-VOLT AMPERES
SP	SPARE
SPD	SURGE PROTECTIVE DEVICE
SPDT	SINGLE POLE-DOUBLE THROW
SPST	SINGLE POLE-SINGLE THROW
SQ	SQUARE
SS	STAINLESS STEEL
SSBJ	SUPPLY SIDE BONDING JUMPER
SSL	SOLID STATE LIGHT
SSM	SOLID STATE METERING
SST	SOLID STATE TRIP
ST	SHUNT TRIP
STA	STATION
STD	STANDARD
STP	SHIELDED TWISTED PAIR
SW	SWITCH
SWBD	SWITCHBOARD
SWGR	SWITCHGEAR
SYM	SYMMETRICAL
SYNCH	SYNCHRONIZER

T

T&B	TOP AND BOTTOM
T, TX	TRANSFORMER
T.O.C	TOP OF CONDUIT
TB	TERMINAL BLOCK
TBD	TO BE DETERMINED
TDR	TIME DELAY RELAY
TEL	TELEPHONE
TEL CAB	TELEPHONE CABINET
TJB	TERMINAL JUNCTION BOX
TP	TRANSFORMER PROTECTION
TSTAT	THERMOSTAT
TYP	TYPICAL

U

UDS	UNITIZED DISTRIBUTION SUBSTATION
UG, UGND	UNDERGROUND
UH	UNIT HEATER
UL	UNDERWRITERS' LABORATORIES
UNO, UON	UNLESS NOTED OTHERWISE, UNLESS OTHERWISE NOTED
UPS	UNINTERRUPTIBLE POWER SUPPLY
UTP	UNSHIELDED TWISTED PAIR
UV	ULTRAVIOLET

V

V	VOLT, VOLTS, VOLTMETER
VA	VOLT-AMPERE
VAC	VOLTS ALTERNATING CURRENT
VAR	VOLT AMPERE REACTIVE
VDC	VOLTS DIRECT CURRENT
VERT	VERTICAL
VESDA	VERY EARLY SMOKE DETECTION
VFD	VARIABLE FREQUENCY DRIVE
VM	VOLT METER
VPE	VACUUM PRESSURE ENCAPSULATED
VPI	VACUUM PRESSURE IMPREGNATED
VS	VOLTMETER SWITCH
VSD	VARIABLE SPEED DRIVE
VT	VOLTAGE TRANSFORMER

W

W	WATTS, WIRE, WIDTH
W/	WITH
W/O	WITHOUT
WG	WATER GAGE
WHD	WATTHOUR DEMAND METER
WP	WEATHERPROOF

X

%X	PERCENT REACTANCE
X	REACTANCE
XFMR	TRANSFORMER
XLP	CROSS-LINK POLYETHYLENE INSULATION

Y

Y	WYE-CONNECTED

Z

%Z	PERCENT IMPEDANCE
Z	IMPEDANCE

SYM	DESCRIPTION	DATE	APPR

NAVFAC

COMMONWEALTH OF VIRGINIA
KELLEY BOURASSA
Lic. No. 0402061759
6/23/2025
PROFESSIONAL ENGINEER
SEAL

Jacobs
1100 NORTH GLEBE ROAD
SUITE 500
ARLINGTON, VIRGINIA 22201
571.218.1000
FAX: 571.218.1600

A/E INFO

APPROVED
FOR COMMANDER NAVFAC
ACTIVITY
APPROVED BY LCDR ELIZABETH OLOKODE NAVFAC NLON FEAD DIRECTOR NEW LONDON, GROTON, CT
SATISFACTORY TO DATE 05/27/2025

DES JHP	DRW JHP	CHK KB	
PM/DM	SMS/CWJ		
BRANCH MANAGER	WRB		
CHIEF ENGIARCH	JWJ		
FIRE PROTECTION	HPN		

DEPARTMENT OF THE NAVY
NAVAL FACILITIES ENGINEERING SYSTEMS COMMAND - MID-ATLANTIC
NAVAL FACILITIES ENGINEERING SYSTEMS COMMAND
MID-ATLANTIC
NAVAL STATION - NORFOLK, VA
NAVAL SUBMARINE BASE NEW LONDON
GROTON, CONNECTICUT
P-1102 WEAPONS MAGAZINE & ORDNANCE OPERATIONS FACILITY
SENTRY
ELECTRICAL ABBREVIATIONS

SCALE: AS NOTED
EPROJECT NO.: 1667770
CONSTR. CONTR. NO.
NAVFAC DRAWING NO.
12894132
SHEET 44 OF 65
E-002

6/19/2025 5:02:40 PM E-002
\\dc1vs01\Revit\PROJECTS\1626\BIL\ECBLDG-1667770-E-BIM_SENTRY_v21.rvt

WIRING DEVICE LEGEND

13	DENOTES ONE OR TWO NUMERIC DIGIT BRANCH CIRCUIT NUMBER
+48"	DENOTES THE MOUNTING HEIGHT IN INCHES AFF
A	ARC FAULT CIRCUIT INTERRUPTER
EWC	ELECTRIC WATER COOLER
GFI	GFCI TYPE, WIRED FOR GFCI TRIP FOR DESIGNATED RECEPTACLE ONLY (NON-FEED-THRU INSTALLATION)
IG	ISOLATED GROUNDING TYPE RECEPTACLE
L	PAD LOCKABLE COVER
PR	PROJECTOR RECEPTACLE LOCATED WITHIN PROJECTOR OR CEILING MOUNT
R	WHEN USED ON DEMOLITION PLANS: DEMOLISH DEVICE AND FACEPLATE, OUTLET BOX TO REMAIN. WHEN USE ON WORK PLANS: PROVIDE DEVICE IN EX. OUTLET BOX.
SPD	SURGE PROTECTIVE DEVICE TYPE RECEPTACLE
TR	TAMPER RESISTANT TYPE RECEPTACLE
TV	TELEVISION RECEPTACLE TYPE RECEPTACLE; COORDINATE MOUNTING HEIGHT AND EXACT LOCATION WITH OWNER'S REPRESENTATIVE PRIOR TO INSTALLATION
U	USB CHARGING
WP	WEATHER-RESISTANT, WEATHERPROOF WITH HINGED COVER
WP-WIN	WEATHER-RESISTANT TYPE, WEATHERPROOF WITH WHILE-IN-USE COVER
XP	EXPLOSION PROOF TYPE, RATED FOR AREA CLASSIFICATION IN WHICH IT IS INSTALLED.

DUPLEX RECPTACLE. UNLESS INDICATED OTHERWISE, RECEPTACLES ARE FLUSH MOUNTED, 20A,125V, 1PH, 2P, 3W, NEMA 5-20R.

DUPLEX RECPTACLE. UNLESS INDICATED OTHERWISE, RECEPTACLES ARE FLUSH MOUNTED, 20A,125V, 1PH, 2P, 3W, NEMA 5-20R, MOUNTED 6" ABOVE COUNTERTOP OR BACKSPLASH UNLESS OTHERWISE NOTED.

DUPLEX RECPTACLE. UNLESS INDICATED OTHERWISE, RECEPTACLES ARE FLUSH MOUNTED, 20A,125V, 1PH, 2P, 3W, NEMA 5-20R ON AN EMERGENCY CIRCUIT.

SPLIT YOKE DUPLEX RECPTACLE WITH TOP BEING CONTROLLED. UNLESS INDICATED OTHERWISE, RECEPTACLES ARE FLUSH MOUNTED, 20A,125V, 1PH, 2P, 3W, NEMA 5-20R. UTILIZE VACANCY / OCCUPANCY SENSOR SERVING THE ROOM UNLESS OTHERWISE NOTED. PROVIDE PLUG LOAD CONTROLLER FOR EACH ROOM SERVED.

TWO DUPLEX (QUAD) RECEPTACLES. UNLESS INDICATED OTHERWISE, RECEPTACES ARE FLUSH MOUNTED, 20A, 125V, 1PH, 2P, 3W, NEMA 5-20R.

SWITCHED TWO DUPLEX (QUAD) RECEPTACLES. QUAD RECEPTACLES HAVE CONTROLLED AND NON-CONTROLLED OUTLETS FED FROM THE SAME CIRCUIT, BUT A SPLIT YOKE IS NOT REQUIRED. UNLESS INDICATED OTHERWISE, RECEPTACES ARE FLUSH MOUNTED, 20A, 125V, 1PH, 2P, 3W, NEMA 5-20R. UTILIZE VACANCY / OCCUPANCY SENSOR SERVING THE ROOM UNLESS OTHERWISE NOTED. PROVIDE PLUG LOAD CONTROLLER FOR EACH ROOM SERVED.

SIMPLEX RECEPTACLE. UNLESS INDICATED OTHERWISE, RECEPTACLES ARE FLUSH MOUNTED, 20A,125V,1PH, 2P, 3W, NEMA 5-20R.

SPECIAL PURPOSE RECEPTACLE, UNLESS INDICATED OTHERWISE, RECEPTACLES ARE FLUSH MOUNTED. RECEPTACLE NEMA TYPES INDICATED ON THE SPECIAL RECEPTACLE SCHEDULE.

CEILING MOUNTED DUPLEX RCPT. UNLESS INDICATED OTHERWISE, 20A,125V, 1PH, 2P, 3W, NEMA 5-20R

A5 — CEILING MOUNTED SPECIAL PURPOSE RECEPTACLE. TYPES ARE AS NOTED IN THE SPECIAL RECEPTACLE SCHEDULE.

CORD REEL

SURFACE MOUNTED RECEPTACLE

FLUSH FLOOR TYPE FLOOR BOX. PROVIDE PER MANUFACTURER INSTRUCTION.

FLUSH FLOOR TYPE FLOOR BOX. PROVIDE PER MANUFACTURER INSTRUCTION. RECEPTACLE NEMA TYPES INDICATED ON THE SPECIAL RECEPTACLE SCHEDULE.

JB — JUNCTION BOX FOR ELECTRICAL EQUIPMENT CONNECTION

F — IN WALL FURNITURE CONNECTION. PROVIDE PER MFR INSTRUCTION.

P — POWER POLE WITH DUPLEX RECEPTACLES, LENGTH AS NEEDED TO EXTEND ABOVE CEILING; SHADED AREA DENOTES TELECOMMUNICATION RACEWAY.

P — POWER POLE WITH DUPLEX RECEPTACLES, LENGTH AS NEEDED TO EXTEND ABOVE CEILING; SHADED AREA DENOTES TELECOMMUNICATION RACEWAY. RECEPTACLE NEMA TYPES INDICATED ON THE SPECIAL RECEPTACLE SCHEDULE.

WALL MOUNTED TWO-COMPARTMENT SURFACE MOUNTED RACEWAY WITH DUPLEX 120V, 20A, 3-WIRE, NEMA 5-20R RECEPTACLES AT 18" ON CENTER. MOUNT 6" ABOVE COUNTER TOP, UNLESS INDICATED OTHERWISE.

1 — NUMERAL = CIRCUIT NUMBER

+36" — +(INCHES) = HEIGHT IN INCHES ABOVE FINISHED FLOOR

WP GFI — CAPITAL LETTER(S) = SPECIAL DESIGNATOR SUBSCRIPT DEFINED ABOVE

ELECTRICAL DISTRIBUTION EQUIPMENT SYMBOLS

FLOOR OR SURFACE MOUNTED 208V PANELBOARD

FLOOR OR SURFACE MOUNTED 480V PANELBOARD

RECESSED 208V PANELBOARD

RECESSED 480V PANELBOARD

T75 — GENERAL PURPOSE, DRY TYPE TRANSFORMER. 'T75' IS THE KVA RATING FOR THE TRANSFORMER. IN THIS EXAMPLE, 'T75' REPRESENTS A TRANSFORMER RATED 75KVA.

ATS — AUTOMATIC TRANSFER SWITCH.

SPD — SURGE PROTECTIVE DEVICE

M — MOTOR CONNECTION

SINGLE POINT CONNECTION FOR PACKAGED EQUIPMENT

COMBINATION MOTOR STARTER / DISCONNECT

MOTOR STARTER

FUSED DISCONNECT

NON FUSED DISCONNECT

VFD — VARIABLE FREQUENCY DEVICE

ELECTRICAL MANHOLE

WIRING SYSTEM/RACEWAY/CABLE TRAY LEGEND

#10, 3/4" — LP-1,3 — BRANCH CIRCUIT "HOMERUN", TIC MARKS INDICATE NUMBER OF CONDUCTORS (INCLUDING NEUTRAL). #10 INDICATES AWG WIRE SIZE, AND 3/4" INDICATES CONDUIT SIZE. WIRE AND CONDUIT SIZE IS APPLICABLE TO EACH CIRCUIT INDICATED FOR ENTIRE LENGTH OF CIRCUIT. BRANCH CIRCUIT WIRING MUST INCLUDE A #12 AWG GROUND IN 3/4" CONDUIT. ARROW HEADS DENOTE A HOMERUN TO PANELBOARD. NUMBER OF ARROWHEADS INDICATE NUMBER OF CIRCUITS IN CONDUIT. "LP-1,3" INDICATES PANEL AND CIRCUIT NUMBERS.

A — SWITCH LEG CONNECTED TO SWITCH "A"

R1 — SWITCH LEG CONNECTED TO RELAY #1 IN LIGHTING CONTROL PANEL INDICATED.

CONDUIT OR CABLE TURNING UP OR TOWARD THE OBSERVER

CONDUIT OR CABLE TURNING DOWN OR AWAY FROM THE OBSERVER

CONDUIT OR CABLE CHANGE IN ELEVATION

SINGLE CONDUIT CAPPED

3 — MULTIPLE CONDUITS, INDIVIDUALLY CAPPED. WHERE NUMERIC DESIGNATION INDICATED, DENOTES QUANTITY OF CAPPED CONDUITS. IN THIS EXAMPLE, THREE CAPPED CONDUITS

CONDUIT WITH BUSHING

S S — RACEWAY CONTINUATION

CABLE TRAY

LUMINAIRE LEGEND

1'X4' RECESSED LUMINAIRE

1'X4' RECESSED CENTER BASKET LUMINAIRE

1'X4' SURFACE LUMINAIRE

1'X4' SURFACE CENTER BASKET LUMINAIRE

1'X4' RECESSED LUMINAIRE CONNECTED TO EMERGENCY SOURCE

2'X2' RECESSED LUMINAIRE

2'X2' RECESSED CENTER BASKET LUMINAIRE

2'X2' SURFACE LUMINAIRE

2'X2' SURFACE CENTER BASKET LUMINAIRE

2'X2' RECESSED LUMINAIRE CONNECTED TO EMERGENCY SOURCE

2'X4' RECESSED LUMINAIRE

2'X4' RECESSED CENTER BASKET LUMINAIRE

2'X4' SURFACE LUMINAIRE

2'X4' SURFACE CENTER BASKET LUMINAIRE

2'X4' RECESSED LUMINAIRE CONNECTED TO EMERGENCY SOURCE

1'X4' PENDANT LUMINAIRE

1'X4' PENDANT LUMINAIRE CONNECTED TO EMERGENCY SOURCE

1'X8' LINEAR PENDANT LUMINAIRE

1'X8' LINEAR PENDANT LUMINAIRE CONNECTED TO EM. SOURCE

ROUND PENDANT LUMINAIRE. SEE LUMINAIRE ANCILLARIES BELOW FOR ADDITIONAL REQUIREMENTS.

DOWNLIGHT LUMINAIRE

DOWNLIGHT LUMINAIRE CONNECTED TO EMERGENCY SOURCE

DOWNLIGHT WALL WASHER LUMINAIRE (CHEVRON(S) POINT TO WASHED WALL(S))

SURFACE OR PENDANT MOUNTED TRACK LUMINAIRE. NUMBERS OF LAMP HEADS AS INDICATED IN LIGHTING FIXTURE SCHEDULE. SEE LUMINAIRE ANCILLARIES BELOW FOR ADDITIONAL REQUIREMENTS.

SITE POLE LUMINAIRE WITH CONCRETE FOOTING. NUMBERS OF LAMP HEADS AS INDICATED IN LIGHTING FIXTURE SCHEDULE. SEE LUMINAIRE ANCILLARIES BELOW FOR ADDITIONAL REQUIREMENTS.

WALL MOUNTED EGRESS LIGHT. MOUNT 8'-0" ABOVE FINISHED FLOOR, UNLESS INDICATED OTHERWISE. NUMBERS OF LAMP HEADS AS INDICATED IN LIGHTING FIXTURE SCHEDULE.

WALL MOUNTED REMOTE LAMP HEAD EMERGENCY LIGHT. MOUNT 8'-0" ABOVE FINISHED FLOOR, UNLESS INDICATED OTHERWISE. NUMBERS OF LAMP HEADS AS INDICATED IN LIGHTING FIXTURE SCHEDULE.

PENDANT OR CEILING MOUNTED ILLUMINATED EGRESS EXIT SIGN. WHERE USED, DIRECTIONAL ARROWS AS INDICATED. MOUNT 8'-0" ABOVE FINISHED FLOOR, UNLESS INDICATED OTHERWISE.

WALL MOUNTED ILLUMINATED EGRESS EXIT SIGN. WHERE USED, DIRECTIONAL ARROWS AS INDICATED. MOUNTED 8'-0" AFF UNLESS INDICATED OTHERWISE .

DENOTES POLE MOUNTED SINGLE ARM LUMINAIRE. POLE HEIGHT AS INDICATED.

DENOTES POLE MOUNTED TWIN CONFIGURATION SINGLE ARM LUMINAIRE. INDIVIDUAL LUMINAIRE TYPE AS INDICATED; POLE HEIGHT AS INDICATED.

DENOTES POLE MOUNTED TRIPLEX CONFIGURED SINGLE ARM LUMINAIRE. INDIVIDUAL TYPE AS INDICATED; POLE HEIGHT AS INDICATED.

DENOTES POLE MOUNTED QUADRAPLEX CONFIGURED SINGLE ARM LUMINAIRE. INDIVIDUAL LUMINAIRE TYPE AS INDICATED; POLE HEIGHT AS INDICATED.

WALL MOUNTED LUMINAIRE. SHADING DENOTES EMERGENCY POWER.

3 — NUMERAL = CIRCUIT NUMBER

A1 a — LOWERCASE ALPHANUMERIC CHARACTER = LIGHTING SWITCH OR CONTROL ZONE

ALPHANUMERIC TAG = LUMINAIRE TAG; COORDINATE WITH LIGHTING FIXTURE SCHEDULE

LIGHTING CONTROL DEVICE LEGEND

3	THREE WAY.
4	FOUR WAY.
P	PHOTOCELL MANUAL OVERRIDE SWITCH.
D	WALL DIMMER.
DP	DOUBLE POLE.
XP	EXPLOSION PROOF
F	WIRELESS CEILING FAN CONTROL STATION
OS	OCCUPANCY SENSOR [WITH MANUAL OVERRIDE].
V	VACANCY SENSOR/SWITCH
VD	VACANCY SENSOR/DIMMER
O	OCCUPANCY SENSOR/SWITCH
OD	OCCUPANCY SENSOR/DIMMER
MC	3 POSITION, MOMENTARY CONTACT WITH CENTER OFF.
WP	WEATHERPROOF.
M	SURFACE MOUNTED MOTOR RATED WITH OVERLOAD ELEMENTS, CONTINOUS CURRENT RATING AND QUANTITY OF POLES AS NEEDED FOR EQUIPMENT SERVED.
T	ADJUSTABLE TIMER SWITCH
PL	ILLUMINATED SWITCH (WHEN OFF)
$	RECESSED WALL MOUNTED SWITCH. PROVIDE ADJACENT DEVICES UNDER COMMON FACEPLATE, FOUR DEVICES MAXIMUM PER FACEPLATE. EVENLY DIVIDE DEVICES INTO SEPARATE GROUPS WHERE ADJCENT DEVICES EXCEEDS FOUR.
$	SURFACE WALL MOUNTED SWITCH. PROVIDE ADJACENT DEVICES UNDER COMMON FACEPLATE, FOUR DEVICES MAXIMUM PER FACEPLATE. EVENLY DIVIDE DEVICES INTO SEPARATE GROUPS WHERE ADJACENT DEVICES EXCEEDS FOUR.

CEILING MOUNTED DUAL-TECHNOLOGY OCCUPANCY SENSOR

CEILING MOUNTED DUAL-TECHNOLOGY CORRIDOR OCCUPANCY SENSOR

CEILING MOUNTED PASSIVE INFRARED OCCUPANCY SENSOR

CEILING MOUNTED PASSIVE INFRARED CORRIDOR OCCUPANCY SENSOR

CEILING MOUNTED ULTRASONIC OCCUPANCY SENSOR

CEILING MOUNTED ULTRASONIC CORRIDOR OCCUPANCY SENSOR

CEILING MOUNTED DUAL-TECHNOLOGY VACANCY SENSOR

CEILING MOUNTED PASSIVE INFRARED VACANCY SENSOR

CEILING MOUNTED ULTRASONIC VACANCY SENSOR

CEILING MOUNTED PHOTO SENSOR

CEILING MOUNTED DAYLIGHT SENSOR

WALL MOUNTED DUAL-TECHNOLOGY OCCUPANCY SENSOR

WALL MOUNTED PASSIVE INFRARED OCCUPANCY SENSOR

WALL MOUNTED ULTRASONIC OCCUPANCY SENSOR

WALL MOUNTED DUAL-TECHNOLOGY VACANCY SENSOR

WALL MOUNTED PASSIVE INFRARED VACANCY SENSOR

WALL MOUNTED ULTRASONIC VACANCY SENSOR

$3a — LIGHTING CONTROL DEVICE IDENTIFICATION (TYPICAL FOR ALL LIGHTING CONTROL DEVICE SYMBOLS WHERE USED)

LOWERCASE LETTER(S) = CONTROL ZONE

CAPITAL LETTER(S) AND/OR NUMERAL = SPECIAL DESIGNATOR SUBSCRIPT DEFINED ABOVE

GROUNDING AND LIGHTNING PROTECTION LEGEND

—G — G — G— GROUNDING CONDUCTOR.

GROUND ROD.

GROUND ROD IN TEST WELL.

GROUND CONNECTION TO BUILDING STEEL OR EQUIPMENT / VESSEL.

GROUND BAR.

BGA — BARREL GROUNDING BAR ASSEMBLY; MOUNTED 5'-0" AFF.

—LPS—LPS— MAIN LIGHTNING PROTECTION CONDUCTOR

LIGHTNING PROTECTION AIR TERMINAL.

LIGHTNING PROTECTION AIR TERMINAL WITH DOWN CONDUCTOR.

SYM	DESCRIPTION	DATE	APPR

NAVFAC

COMMONWEALTH OF VIRGINIA
KELLEY BOURASSA
LIC. NO. 040206L1759
6/25/2025
PROFESSIONAL ENGINEER
SEAL

Jacobs
1100 NORTH GLEBE ROAD
SUITE 500
ARLINGTON, VIRGINIA 22201
571.218.1000
FAX: 571.218.1600

A/E INFO

APPROVED

FOR COMMANDER NAVFAC

ACTIVITY
APPROVED BY LCDR ELIZABETH OLOKODE NAVFAC NLON FEAD DIRECTOR NEW LONDON, GROTON, CT

SATISFACTORY TO DATE 05/27/2025

DES	JHP	DRW JHP	CHK KB
PM/DM			SMS/CWJ
BRANCH MANAGER			WRB
CHIEF ENG/ARCH			JWJ
FIRE PROTECTION			HPN

DEPARTMENT OF THE NAVY
NAVAL FACILITIES ENGINEERING SYSTEMS COMMAND - MID-ATLANTIC
MID-ATLANTIC
NAVAL FACILITIES ENGINEERING SYSTEMS COMMAND
NAVAL STATION - NORFOLK, VA
NAVAL SUBMARINE BASE NEW LONDON
GROTON, CONNECTICUT
P-1102 WEAPONS MAGAZINE & ORDNANCE OPERATIONS FACILITY
SENTRY
ELECTRICAL SYMBOLS

SCALE: AS NOTED
EPROJECT NO.: 1667770
CONSTR. CONTR. NO.
NAVFAC DRAWING NO. 12894133
SHEET 45 OF 65

E-003

6/19/2025 5:02:42 PM E-003
\\NA1.ad.jacobs.com\DFS\DEN\26\BIM\ELEC\BLDG-1667770-E-BIM_SENTRY_v21.rvt

SINGLE LINE DIAGRAM LEGEND

1200A 52	MEDIUM VOLTAGE DRAWOUT CIRCUIT BREAKER.
1600 AF 800 AS 600 AT LSIG	LOW VOLTAGE DRAWOUT CIRCUIT BREAKER.
1600 AF 800 AS 600 AT LSIG F-800 A C.L.	LOW VOLTAGE DRAWOUT CURRENT LIMITING CIRCUIT BREAKER.
250 AF 225 AT LSIG	LOW VOLTAGE MOLDED CASE CIRCUIT BREAKER.
1200/5 3 LSIG	SOLID STATE TRIP UNIT WITH CT INPUT OR MODULE CAPABLE OF MONITORING AMPS, INSTANTANEOUS KW, PEAK KW AND KWH.
MR 1200/5 3	PHASE CURRENT TRANSFORMER.
50/5 1	ZERO SEQUENCE CURRENT TRANSFORMER.
100 VA PT	POTENTIAL TRANSFORMER.
480V 10KVA, 1PH 120/240V CPT	CONTROL POWER TRANSFORMER.
T-PD2A 30KVA 480 V- 208/120 V	TRANSFORMER.
KT30Y 480 V- 208/120 V	ISOLATION TRANSFORMER.
	CABLE LUG TERMINATION
LA'S 3	LIGHTNING ARRESTER. NUMERIC VALUE DENOTES QUANTITY.
P S L ATS	TRANSFER SWITCH. 'ATS' DENOTES AUTOMATIC TRANSFER TYPE, 'MTS' DENOTES MANUAL TRANSFER TYPE. 'P' DENOTES PRIMARY POWER SOURCE; 'S' DENOTES SECONDARY POWER SOURCE; 'L' DENOTES TRANSFER SWITCH LOAD SIDE CONNECTION POINT.
PNL L1A	PANELBOARD WITH A VOLTAGE OF 480V OR HIGHER.
PNL L1A	PANELBOARD WITH VOLTAGE UNDER 480V.
	BATTERY.
DM	DIGITAL METER.
	GROUNDING CONNECTION.
13Y	FEEDER / BRANCH CIRCUIT DESIGNATION. IN THIS EXAMPLE, '13Y' REFERS TO THE SYMBOL COLUMN OF THE FEEDER/BRANCH CIRCUIT SCHEDULE. THE ASSOCIATED SYMBOL DESIGNATION DENOTES THE FEEDER / BRANCH CIRCUIT REQUIREMENTS FOR THE ITEM TAGGED.

SINGLE LINE DIAGRAM LEGEND

SPD	SURGE PROTECTIVE DEVICE.
200 KVAR	VARIABLE POWER FACTOR CORRECTION CAPACITOR BANK.
N.C. 600 A	LOAD INTERRUPTER SWITCH.
30A/3P N.C. F-MFR	NON-FUSED DISCONNECT / SAFETY SWITCH.
30A/3P N.C. F-30A	FUSED DISCONNECT / SAFETY SWITCH.
E	ENGINE.
G	GENERATOR.
GFP	GROUND FAULT PROTECTION.
	LOADBANK.
	FUSE
	FUSED DRAWOUT POTENTIAL TRANSFORMER.
	FUSED POTENTIAL TRANSFORMER.
	POWER FILTER.
	SURGE PROTECTIVE DEVICE.
R1	RELAY.
	UPS AND BATTERY.
60A/3P	IN THIS EXAMPLE. DENOTES 60 AMPERES / 3 POLE.
F-30A	IN THIS EXAMPLE, DENOTES FUSED WITH 30 AMPERE FUSES.
F-MFR	DENOTES FUSE RATING IN ACCORDANCE WITH MANUFACTURER'S INSTRUCTIONS FOR THE UTILIZATION EQUIPMENT PROTECTED BY THE FUSES.
N3R	IN THIS EXAMPLE, DENOTES NEMA 3R ENCLOSURE.
SN	DENOTES SOLID NEUTRAL.
N.C.	DENOTES NORMALLY CLOSED.
N.O.	DENOTES NORMALLY OPEN.
1600 AF 800 AT LSIG	DEVICE ADJUSTABLE PROTECTION OPTIONS. LONG, SHORT, INSTANTANEOUS, AND GROUND PICKUPS IN THIS EXAMPLE.
	"AF" DENOTES FRAME SIZE, "AT" DENOTES TRIP SETTING. 1600A FRAME WITH 800A TRIP IN THIS EXAMPLE.
30A/3P N.C. (3) F-30A	DENOTES SWITCH SIZE AND POLES. 30A, 3-POLE SWITCH IN THIS EXAMPLE.
	DENOTES ORIENTATION OF SWITCH. NORMALLY CLOSED IN THIS EXAMPLE.
	DENOTES QUANTITY AND RATING OF FUSES. THREE 30A IN THIS EXAMPLE.

SINGLE LINE DIAGRAM LEGEND

1 E RVPW	MOTOR CONTROL CENTER MOTOR STARTER OR LOCAL CONTROLLER. IN THIS EXAMPLE, '1' DENOTES NEMA SIZE, 'RVPW' DENOTES REDUCED VOLTAGE PART-WINDING, WHERE INDICATED, 'E' DENOTES ELECTRONIC OR SOLID STATE OVERLOAD RELAY. UNLESS INDICATED OTHERWISE, LOCAL CONTROLLER ENCLOSURES ARE RATED NEMA 1.
1 E RVSS	MOTOR CONTROL CENTER MOTOR STARTER OR LOCAL CONTROLLER. IN THIS EXAMPLE, '1' DENOTES NEMA SIZE, 'RVSS' DENOTES REDUCED VOLTAGE SOLID STATE SOFT STARTER, WHERE INDICATED, 'E' DENOTES ELECTRONIC OR SOLID STATE OVERLOAD RELAY. UNLESS INDICATED OTHERWISE, LOCAL CONTROLLER ENCLOSURES ARE RATED NEMA 1.
1 WD	MOTOR CONTROL CENTER MOTOR STARTER OR LOCAL CONTROLLER. IN THIS EXAMPLE, '1' DENOTES NEMA SIZE, 'WD' DENOTES WYE-DELTA STARTER, WHERE INDICATED, 'E' DENOTES ELECTRONIC OR SOLID STATE OVERLOAD RELAY. UNLESS INDICATED OTHERWISE, LOCAL CONTROLLER ENCLOSURES ARE RATED NEMA 1.
1 MSCT	MOTOR CONTROL CENTER MOTOR STARTER OR LOCAL CONTROLLER. IN THIS EXAMPLE, '1' DENOTES NEMA SIZE, 'MSCT' DENOTES MULTI-SPEED CONSTANT TORQUE STARTER, WHERE INDICATED, 'E' DENOTES ELECTRONIC OR SOLID STATE OVERLOAD RELAY. UNLESS INDICATED OTHERWISE, LOCAL CONTROLLER ENCLOSURES ARE RATED NEMA 1.
1 MSVT	MOTOR CONTROL CENTER MOTOR STARTER OR LOCAL CONTROLLER. IN THIS EXAMPLE, '1' DENOTES NEMA SIZE, 'MSVT' DENOTES MULTI-SPEED VARIABLE TORQUE STARTER, WHERE INDICATED, 'E' DENOTES ELECTRONIC OR SOLID STATE OVERLOAD RELAY. UNLESS INDICATED OTHERWISE, LOCAL CONTROLLER ENCLOSURES ARE RATED NEMA 1.
1 MSCH	MOTOR CONTROL CENTER MOTOR STARTER OR LOCAL CONTROLLER. IN THIS EXAMPLE, '1' DENOTES NEMA SIZE, 'MSCH' DENOTES MULTI-SPEED CONSTANT HORSEPOWER STARTER, WHERE INDICATED, 'E' DENOTES ELECTRONIC OR SOLID STATE OVERLOAD RELAY. UNLESS INDICATED OTHERWISE, LOCAL CONTROLLER ENCLOSURES ARE RATED NEMA 1.
50 EF-01	MOTOR; EQUIPMENT IDENTIFICATION AND HORSEPOWER AS INDICATED.
M	MULTIFUNCTION METER
EMM	ELECTRONIC METERING MODULE: MICROPROCESSOR BASED FOR METERING, ANALYZING, WAVEFORM CAPTURE AND CAPABLE OF PROVIDING MONITORED DATA PARAMETERS
LMU	LOCAL MONITORING UNIT FOR SWITCHGEAR ASSEMBLIES CAPABLE OF UP TO 40 SEPARATE DATA INPUTS FROM BREAKER LSIG'S, EMM'S AND MFR'S; CONFIGURABLE DISPLAY SCREEN; DATA OUTPUT PORTS
	DENOTES FUTURE CIRCUIT / EQUIPMENT
	DENOTES BRANCH CIRCUIT / FEEDER IN CABLE TRAY.
	DENOTES BRANCH CIRCUIT / FEEDER IN CONDUIT.
	DENOTES GROUNDING SYSTEM.
	DENOTES ELECTRICAL EQUIPMENT BUS.
	DENOTES DATA CIRCUITRY
	DENOTES EQUIPMENT ENCLOSURE.

ADJUSTABLE PROTECTION DESIGNATIONS

DESIGNATION	PROTECTION
L	LONG PICKUP AND TIME DELAY PROTECTION
S	SHORT PICKUP AND TIME DELAY PROTECTION
I	INSTANTANEOUS PICKUP PROTECTION
G	GROUND (EARTH) PICKUP AND TIME DELAY PROTECTION
N	NEUTRAL PROTECTION
DESIGNATION	**PROTECTION DEVICE FEATURES / ACCESSORIES**
	NOTE: MULTIPLE DESIGNATIONS MAY BE ADJACENT TO DEVICE.
K	KEY INTERLOCK
ST	SHUNT TRIP
ET	ELECTRONIC TRIP

TELECOMMUNICATIONS LEGEND

	WIRELESS ACCESS POINT
	DATA/VOICE WALL MOUNTED RECEPTACLE
	DATA WALL MOUNTED RECEPTACLE
	DATA CEILING MOUNTED RECEPTACLE
	DATA WIRELESS ACCESS POINT
	DATA FLOOR BOX
	DATA/VOICE CEILING MOUNTED RECEPTACLE
	DOORBELL PUSHBUTTON MOUNTED 48" AFF TO CENTER OF BOX UNLESS OTHERWISE NOTED.
JB TV	WALL MOUNTED CALBE TV OUTLET MOUNTED 18" AFF TO CENTER OF BOX UNLESS OTHERWISE NOTED.
JB	CEILING MOUNTED JUNCTION BOX.

ELECTRICAL EQUIPMENT NOMENCLATURE

T-L P-S B

ALPHANUMERIC CHARACTER DENOTING IF EQUIPMENT IS ON STANDBY (SB) POWER. ABSENCE OF CHARACTERS INDICATES EQUIPMENT IS NOT ON STANDBY POWER.

SINGLE OR DOUBLE ALPHANUMERIC CHARACTER DENOTING EQUIPMENT TYPE DESIGNATION, AS FOLLOWS:

L -208Y/120V POWER
H -480Y/277V POWER
MD -MAIN DISTRIBUTION
P -POWER PANEL

WHERE APPLICABLE, SINGLE TO TRIPLE ALPHANUMERIC CHARACTER DENOTING EQUIPMENT TYPE MODIFIER, AS FOLLOWS:

A - AUTOMATIC TRANSFER SWITCH.
T - TRANSFORMER

SYM	DESCRIPTION	DATE	APPR

NAVFAC

COMMONWEALTH OF VIRGINIA
KELLEY BOURASSA
LIC. NO. 0402061759
6/23/2025
PROFESSIONAL ENGINEER
SEAL

Jacobs
1100 NORTH GLEBE ROAD
SUITE 500
ARLINGTON, VIRGINIA 22201
571.218.1000
FAX: 571.218.1600

A/E INFO

APPROVED
FOR COMMANDER NAVFAC
ACTIVITY
APPROVED BY LCDR ELIZABETH OLOKODE NAVFAC NLON FEAD DIRECTOR NEW LONDON, GROTON, CT
SATISFACTORY TO DATE 05/27/2025

DES JHP	DRW JHP	CHK KB	
PM/DM			SMS/CWJ
BRANCH MANAGER			WRB
CHIEF ENG/ARCH			JWJ
FIRE PROTECTION			HPN

DEPARTMENT OF THE NAVY
NAVAL FACILITIES ENGINEERING SYSTEMS COMMAND - MID-ATLANTIC
MID-ATLANTIC
NAVAL FACILITIES ENGINEERING SYSTEMS COMMAND
NAVAL STATION, NORFOLK, VA
NAVAL SUBMARINE BASE NEW LONDON
GROTON, CONNECTICUT
P-1102 WEAPONS MAGAZINE & ORDNANCE OPERATIONS FACILITY
SENTRY
ELECTRICAL SYMBOLS

SCALE: AS NOTED
EPROJECT NO.: 1667770
CONSTR. CONTR. NO.
NAVFAC DRAWING NO. 12894134
SHEET 46 OF 65
E-004

6/19/2025 5:02:44 PM E-004
\\DC1-vol01\Redgn\FD02\E16\BIE\ECBLD\S-1667770-E-BIM_SENTRY_v21.rvt

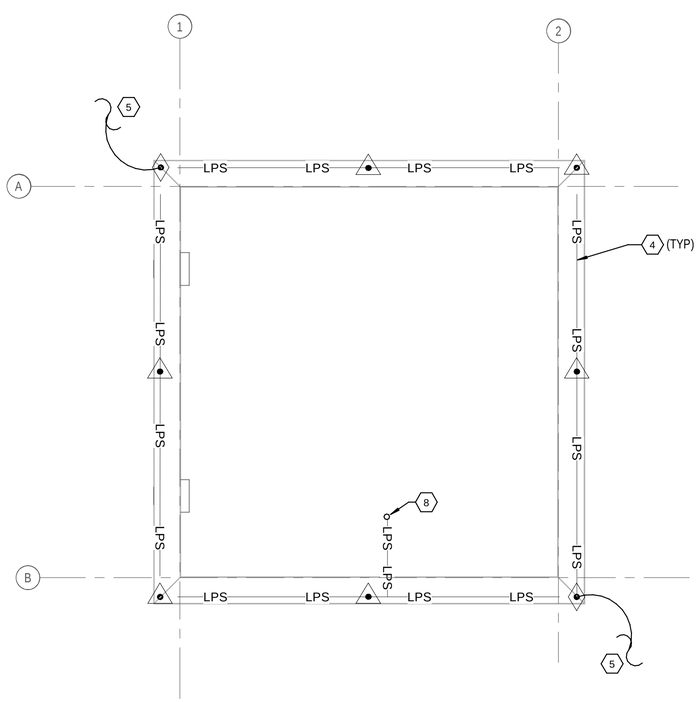

A1 ROOF LEVEL - LIGHTNING PROTECTION PLAN

1/4" = 1'-0"

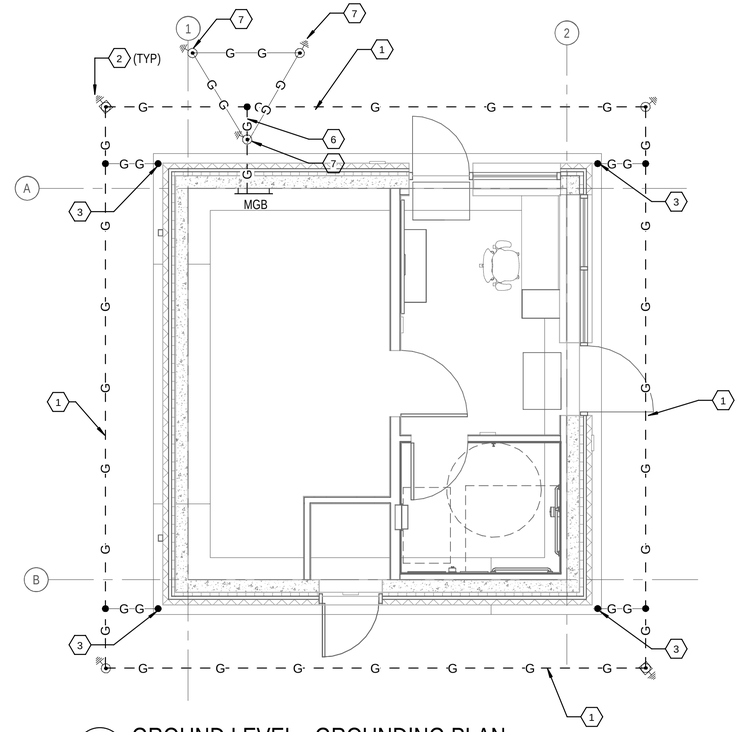

A3 GROUND LEVEL - GROUNDING PLAN

1/4" = 1'-0"

GENERAL SHEET NOTES

A. REFER TO SHEETS E-001 THROUGH E-004 FOR ADDITIONAL ELECTRICAL INFORMATION.

B. PROVIDE CLASS 1 LIGHTNING PROTECTION SYSTEM. PROVIDE #2/0AWG BARE COPPER CONDUCTOR WITH STRANDS NOT LESS THAN #17AWG FOR MAIN ROOF LPS AND DOWN CONDUCTORS.

C. EXTERIOR CONDUCTORS WITHIN 8 FEET OF PAVEMENT MUST BE PROTECTED IN 1" SCHEDULE 80 PVC CONDUIT.

SHEET KEYNOTES

1. PROVIDE #2/0 AWG BARE COPPER GROUND LOOP CONDUCTOR INSTALLED AT APPROXIMATELY 3'-0" OUT FROM THE EXTERIOR WALL AT 36" BELOW GRADE.
2. PROVIDE GROUND ROD WITH TEST PIT ENCLOSURE WITH MECHANICAL HIGH STRENGTH CABLE CONNECTORS FOR SYSTEM TESTING.
3. BOND THE BUILDING REBAR TO SECONDARY GROUND LOOP WITH A #2/0 AWG BARE COPPER BONDING CONDUCTOR.
4. PROVIDE MAIN ROOF CONDUCTOR INTERCONNECTING THE AIR TERMINALS.
5. PROVIDE DOWN CONDUCTOR FROM AIR TERMINAL IN A 1" SCHEDULE 80 PVC CONDUIT DOWN TO 18" BELOW GRADE TO THE TEST WELL SHOWN ON THIS SHEET.
6. PROVIDE #2/0 AWG BARE COPPER BONDING CONDUCTOR FROM GROUND BAR TO SECONDARY GROUND LOOP.
7. NEC REQUIRED SERVICE GROUND ROD.
8. BOND PLUMBING VENT TO LPS.

SYM	DESCRIPTION	DATE	APPR

NAVFAC

COMMONWEALTH OF VIRGINIA
KELLEY BOURASSA
LIC. NO. 0402061759
6/23/2025
PROFESSIONAL ENGINEER
SEAL

Jacobs
1100 NORTH GLEBE ROAD
SUITE 500
ARLINGTON, VIRGINIA 22201
571.218.1000
FAX: 571.218.1600

A/E INFO

APPROVED
FOR COMMANDER NAVFAC 8/11/2025
ACTIVITY
APPROVED BY LCDR ELIZABETH OLOKODE NAVFAC NLON FEAD DIRECTOR NEW LONDON, GROTON, CT
SATISFACTORY TO DATE 05/27/2025

DES JHP	DRW JHP	CHK KB	
PM/DM			SMS/CWJ
BRANCH MANAGER			WRB
CHIEF ENG/ARCH			JWJ
FIRE PROTECTION			HPN

DEPARTMENT OF THE NAVY
NAVAL FACILITIES ENGINEERING SYSTEMS COMMAND - MID-ATLANTIC
MID-ATLANTIC
NAVAL FACILITIES ENGINEERING SYSTEMS COMMAND
NAVAL STATION - NORFOLK, VA
NAVAL SUBMARINE BASE NEW LONDON
GROTON, CONNECTICUT
P-1102 WEAPONS MAGAZINE & ORDNANCE OPERATIONS FACILITY
SENTRY
ELECTRICAL GROUNDING AND LIGHTNING PROTECTION PLAN

SCALE: AS NOTED
EPROJECT NO.: 1667770
CONSTR. CONTR. NO.
NAVFAC DRAWING NO. 12894135
SHEET 47 OF 65
EG101

0 2' 4' 8' 12'
1/4" = 1'-0"

PLAN NORTH

6/19/2025 5:03:04 PM EG101
\\ad.jacobs.com\dfs\Projects\P2\E1628\ELEC\BLDG-1667770-E-BIM_SENTRY_v21.rvt

GENERAL SHEET NOTES

A. REFER TO SHEETS E-001 THROUGH E-004 FOR ADDITIONAL ELECTRICAL INFORMATION.

B. REFER TO LIGHTING FIXTURE AND CONTROLS SCHEDULE ON SHEET E-701 FOR ADDITIONAL INFORMATION.

C. PROVIDE UNSWITCHED HOT LEG TO EXIT SIGNS.

SHEET KEYNOTES

1. PROVIDE PHOTOCELL MOUNTED ON ROOF FACING NORTHERN SKY FOR CONTROL OF EXTERIOR WALLPACKS.

2. PROVIDE PHOTOCELL MOUNTED ON ROOF FACING NORTHERN SKY FOR CONTROL OF MAGAZINE AREA POLE LIGHTS. REFER TO SITE PACKAGE FOR POLE LIGHT LOCATIONS AND LIGHTING CONTROL SEQUENCE OF OPERATION.

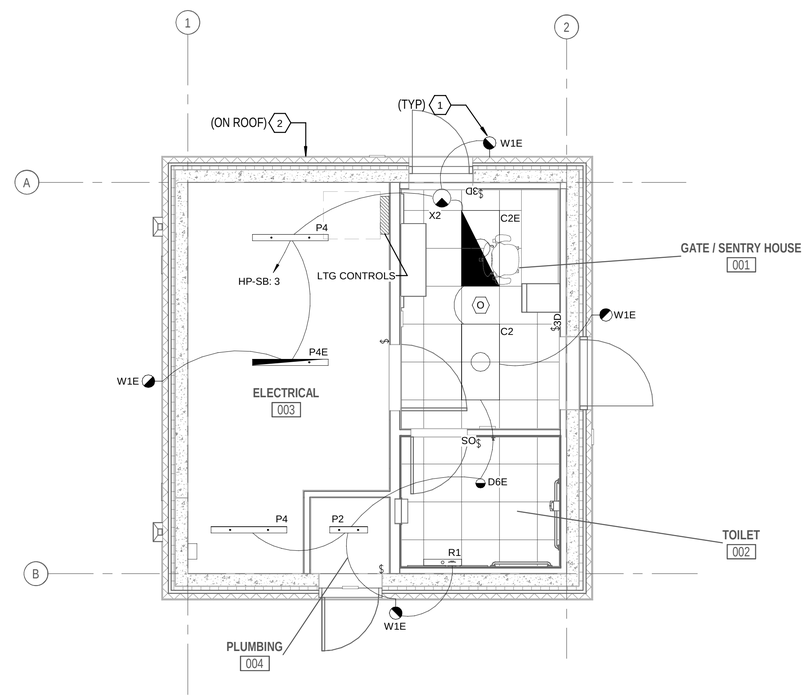

A3 LIGHTING PLAN
1/4" = 1'-0"

0 2' 4' 8' 12'
1/4" = 1'-0"

PLAN NORTH

SYM	DESCRIPTION	DATE	APPR

NAVFAC

COMMONWEALTH OF VIRGINIA
KELLEY BOURASSA
LIC. NO. 0401206175 9
6/23/2025
PROFESSIONAL ENGINEER
SEAL

Jacobs
1100 NORTH GLEBE ROAD
SUITE 500
ARLINGTON, VIRGINIA 22201
571.218.1000
FAX: 571.218.1600

A/E INFO

APPROVED
FOR COMMANDER NAVFAC
ACTIVITY
APPROVED BY LCDR ELIZABETH OLOKODE NAVFAC NLON FEAD DIRECTOR NEW LONDON, GROTON, CT
SATISFACTORY TO DATE 05/27/2025

DES JHP	DRW JHP	CHK KB	
PMDM			SMS/CWJ
BRANCH MANAGER			WRB
CHIEF ENGARCH			JWJ
FIRE PROTECTION			HPN

DEPARTMENT OF THE NAVY
NAVAL FACILITIES ENGINEERING SYSTEMS COMMAND
MID-ATLANTIC
NAVAL FACILITIES ENGINEERING SYSTEMS COMMAND - MID-ATLANTIC
NAVAL STATION - NORFOLK, VA
NAVAL SUBMARINE BASE NEW LONDON
GROTON, CONNECTICUT
P-1102 WEAPONS MAGAZINE & ORDNANCE OPERATIONS FACILITY
SENTRY
ELECTRICAL LIGHTING PLAN

SCALE: AS NOTED
EPROJECT NO.: 1667770
CONSTR. CONTR. NO.
NAVFAC DRAWING NO.
12894136
SHEET 48 OF 65
EL101

6/19/2025 5:03:06 PM EL101
\\dc1vsol\Revit\Proj\FOZE1629\EL\EC\BLDG-1667770-E-BIM_SENTRY_v21.rvt

MECHANICAL EQUIPMENT CONNECTION SCHEDULE

TAG	DESCRIPTION	LOCATION	VOLTAGE	PHASE	kVA	FLA	SETS	WIRE AND CONDUIT	CIRCUIT	LOCAL DISCONNECTING MEANS TYPE	DISCONNECT RATING	DISCONNECT ENCLOSURE
CU-1	CONDENSING UNIT	EXTERIOR	208	1	3	15.2	1	2 - #10 + #10N + #10G IN 3/4"C	LP-SB: 11,13	FACTORY MOUNTED AND WIRED FUSED DISCONNECT SW.	NA	NA
CU-2	CONDENSING UNIT	EXTERIOR	208	1	2	8.8	1	2 - #12 + #12N + #12G IN 3/4"C	LP-SB: 14,16	FACTORY MOUNTED AND WIRED FUSED DISCONNECT SW.	NA	NA
DHWH-1	HOT WATER HEATER	TOILET 002	208	1	4	20.0	1	2 - #10 + #10G IN 3/4"C	LP-SB: 10,12	NONFUSED ENCLOSED ROTARY DISCONNECT SW.	30A	NEMA 1
ERV-1	ENERGY RECOVERY VENTILATOR	GATE/SENTRY HOUSE 001	120	1	0	0.4	1	1 - #12 + #12N + #12G IN 3/4"C	LP-SB: 15	CEILING MOUNTED DUPLEX RECEPTACLE	NA	NEMA 1
UH-1	ELECTRIC UNIT HEATER	TOILET 002	208	1	2	7.2	1	2 - #12 + #12G IN 3/4"C	LP-SB: 17,19	INTEGRAL UNIT MOUNTED SWITCH BY MANUFACTURER	NA	NEMA 1
UH-2	ELECTRIC UNIT HEATER	PLUMBING 004	208	1	2	7.2	1	2 - #12 + #12G IN 3/4"C	LP-SB: 18,20	INTEGRAL UNIT MOUNTED SWITCH BY MANUFACTURER	NA	NEMA 1

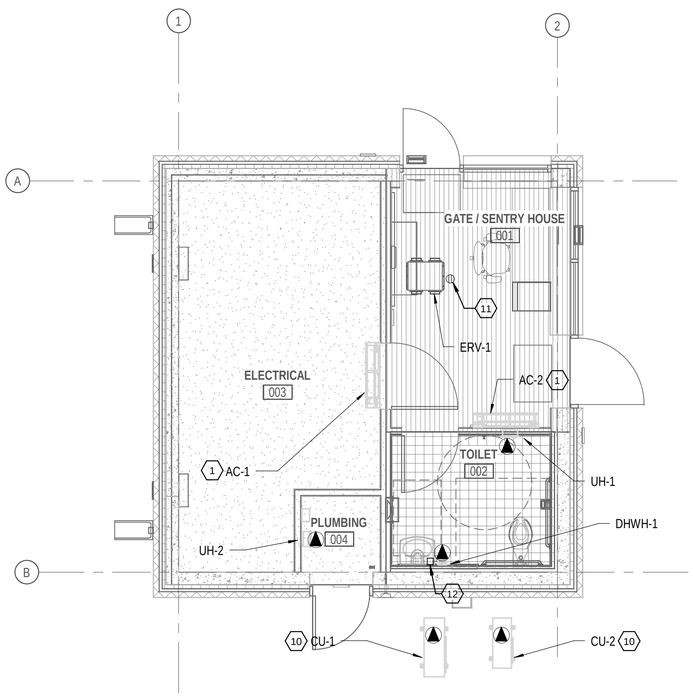

A1 EQUIPMENT POWER PLAN
1/4" = 1'-0"

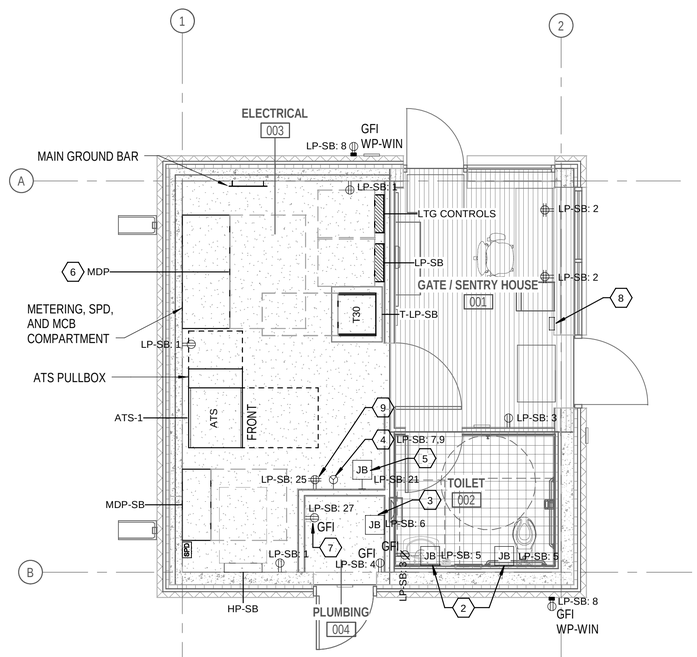

A3 POWER PLAN
1/4" = 1'-0"

GENERAL SHEET NOTES

A. REFER TO SHEETS E-001 THROUGH E-004 FOR ADDITIONAL ELECTRICAL INFORMATION.

B. REFER TO EQUIPMENT CONNECTION SCHEDULE ON THIS SHEET FOR ADDITIONAL CIRCUITING AND DISCONNECTING MEANS INFORMATION.

SHEET KEYNOTES

1. UNIT IS POWERED BY CORRESPONDING OUTDOOR UNIT. PROVIDE WIRING FROM OUTDOOR UNIT TO INDOOR UNIT AS RECOMMENDED BY EQUIPMENT MANUFACTURER. PROVIDE 30A NON-FUSED DISCONNECT SWITCH IN NEMA 1 ENCLOSURE.
2. PROVIDE JUNCTION BOX AND HARDWIRED CIRCUIT FOR SENSOR OPERATED CONTROLS FOR EVERY PLUMBING FIXTURE LOCATED IN RESTROOM.
3. PROVIDE 120V HARDWIRED CIRCUIT FOR ELECTRONIC TRAP PRIMER.
4. PROVIDE NEMA L6-30R FOR TELECOM RACK POWER. PROVIDE 2#10 + 1#10G IN 3/4"C.
5. PROVIDE 120V HARDWIRED CIRCUIT FOR SECURITY PANEL POWER.
6. SWITCHBOARD WIDTH MUST NOT EXCEED 6'-0".
7. PROVIDE RECEPTACLE FOR REMOTE WATER METER DISPLAY.
8. PROVIDE GENERATOR ANNUNCIATOR PANEL.
9. PROVIDE DEDICATED QUAD RECEPTACLE FOR TELECOM RACK POWER.
10. COORDINATE FINAL LOCATION OF MANUFACTURER PROVIDED DISCONNECT SWITCH. MAINTAIN NEC CLEARANCES.
11. COORDINATE FINAL LOCATION OF CEILING MOUNTED RECEPTACLE FOR ERV-1 WITH EQUIPMENT SUPPLIER.
12. LOCATE DISCONNECT SWITCH FOR DHWH-1 BELOW SINK.

0 2' 4' 8' 12'
1/4" = 1'-0"

PLAN NORTH

SYM	DESCRIPTION	DATE	APPR

NAVFAC

COMMONWEALTH OF VIRGINIA
KELLEY BOURASSA
LIC. NO. 040206175 9
6/23/2025
PROFESSIONAL ENGINEER
SEAL

Jacobs
1100 NORTH GLEBE ROAD
SUITE 500
ARLINGTON, VIRGINIA 22201
571.218.1000
FAX: 571.218.1600
A/E INFO

APPROVED
FOR COMMANDER NAVFAC 3/11/2025
ACTIVITY
APPROVED BY LCDR ELIZABETH OLOKODE NAVFAC NLON FEAD DIRECTOR NEW LONDON, GROTON, CT
SATISFACTORY TO DATE 05/27/2025
DES JHP DRW JHP CHK KB
PM/DM SMS/CWJ
BRANCH MANAGER WRB
CHIEF ENG/ARCH JWJ
FIRE PROTECTION HPN

DEPARTMENT OF THE NAVY
NAVAL FACILITIES ENGINEERING SYSTEMS COMMAND
MID-ATLANTIC
NAVAL FACILITIES ENGINEERING SYSTEMS COMMAND - MID-ATLANTIC
NAVAL STATION - NORFOLK, VA
NAVAL SUBMARINE BASE NEW LONDON
GROTON, CONNECTICUT
P-1102 WEAPONS MAGAZINE & ORDNANCE OPERATIONS FACILITY
SENTRY
ELECTRICAL POWER AND EQUIPMENT POWER PLAN

SCALE: AS NOTED
EPROJECT NO.: 1667770
CONSTR. CONTR. NO.
NAVFAC DRAWING NO. 12894137
SHEET 49 OF 65
EP101

6/19/2025 5:03:09 PM EP101
\\ad.jacobs.com\dfs\PHDEL\628\ELEC\BLDG-1667770-E-BIM_SENTRY_v21.rvt

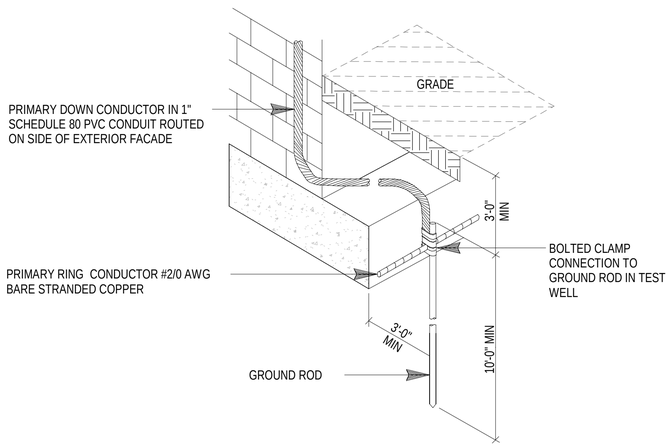

B1 TYPICAL ELECTRICAL DOWN CONDUCTOR DETAIL
NTS

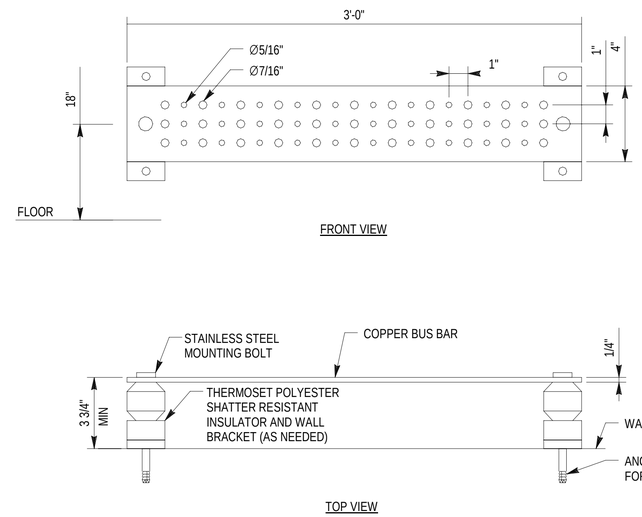

B3 MAIN GROUND BAR (MBG) DETAIL
NTS

NOTES:

1. PROVIDE WALL MOUNTED NAMEPLATE INDICATING GROUND BAR IDENTITY 12 INCHES ABOVE GROUND BAR. SEE GROUNDING PLAN FOR GROUND BAR IDENTITIES.

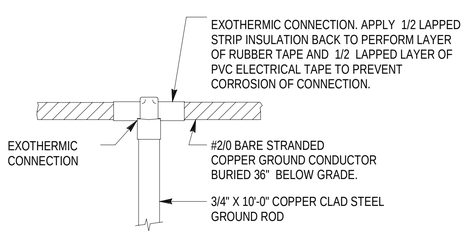

A1 GROUND ROD DETAIL
NTS

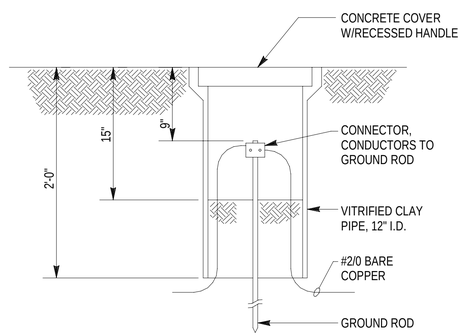

A2 GROUND TEST WELL
NTS

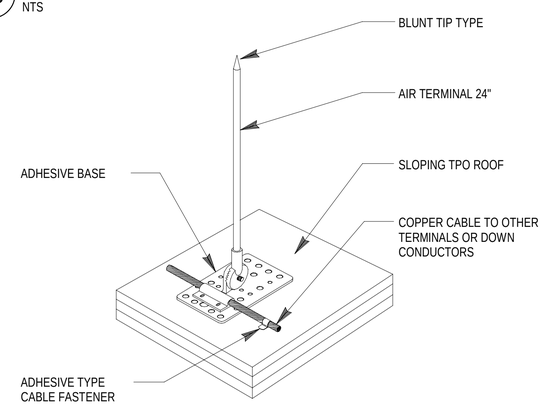

A3 LIGHTNING PROTECTION AIR TERMINAL
NTS

SYM	DESCRIPTION	DATE	APPR

NAVFAC

COMMONWEALTH OF VIRGINIA
KELLEY BOURASSA
Lic. No. 0402061759
6/23/2025
PROFESSIONAL ENGINEER
SEAL

Jacobs
1100 NORTH GLEBE ROAD
SUITE 500
ARLINGTON, VIRGINIA 22201
571.218.1000
FAX: 571.218.1600

A/E INFO

APPROVED
FOR COMMANDER NAVFAC 3/14/2025
ACTIVITY
APPROVED BY LCDR ELIZABETH OLOKODE NAVFAC NLON FEAD DIRECTOR NEW LONDON, GROTON, CT
SATISFACTORY TO DATE 05/27/2025
DES JHP DRW JHP CHK KB
PM/DM SMS/CWJ
BRANCH MANAGER WRB
CHIEF ENG/ARCH JWJ
FIRE PROTECTION HPN

DEPARTMENT OF THE NAVY
NAVAL FACILITIES ENGINEERING SYSTEMS COMMAND - MID-ATLANTIC
NAVAL FACILITIES ENGINEERING SYSTEMS COMMAND
MID-ATLANTIC
NAVAL STATION - NORFOLK, VA
NAVAL SUBMARINE BASE NEW LONDON
GROTON, CONNECTICUT
P-1102 WEAPONS MAGAZINE & ORDNANCE OPERATIONS FACILITY
SENTRY
ELECTRICAL DETAILS

SCALE: AS NOTED
EPROJECT NO.: 1667770
CONSTR. CONTR. NO.
NAVFAC DRAWING NO. 12894138
SHEET 50 OF 65
E-501

E-501
6/19/2025 5:02:46 PM
\\bcs.sys\1\Bcs\jhp\PDZE1\628\ELEC\BLDG-1667770-E-BIM_SENTRY_v21.rvt

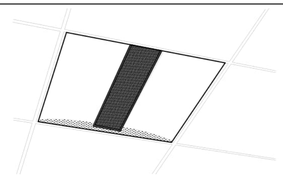

NOTE: THIS SKETCH IS A NON-PROPRIETARY GRAPHIC REPRESENTATION OF A LUMINAIRE THAT MAY MEET THE SPECIFICATION REQUIREMENTS. IT IS NOT INTENDED TO INDICATE A CERTAIN MANUFACTURER OR PREFERENCE.

LUMINAIRE REQUIREMENTS:

1. HOUSING – HEAVY GAUGE COLD ROLLED STEEL. SIZE SHOWN AS INDICATED IN LUMINAIRE SCHEDULE.
2. OPTICS – FROSTED ACRYLIC LENS WITH DIE FORMED COLD ROLLED SHEET STEEL REFLECTORS.
3. LIGHT SOURCE – SOLID STATE LEDS, 3500K CCT UON, MINIMUM 80 CRI UON, AND MINIMUM EFFICACY OF 100 LUMENS/WATT UON. INITIAL LUMEN OUTPUT AS INDICATED IN LUMINAIRE SCHEDULE.
4. DRIVER – REPLACEABLE, INTEGRAL, HIGH-EFFICIENCY DIMMABLE DRIVER WITH MINIMUM 0.9 PF, OPERATING VOLTAGE OF 120–277V, THERMAL MANAGEMENT, AND < 20% THD. ON/OFF CONTROL AND FULLY DIMMABLE DOWN TO 10% MINIMUM OR AS INDICATED IN LUMINAIRE SCHEDULE.
5. CERTIFICATION – UL LISTED FOR DRY LOCATION, ROHS COMPLIANT. DLC QUALIFIED. COMPLIES WITH IES LM79, LM80 AND TM21 TESTING STANDARDS.
6. MOUNTING – RECESSED IN ACOUSTICAL TILE CEILING.
7. OPTIONS – EMERGENCY BATTERY BACK-UP, VARIOUS SIZE AND OUTPUT OPTIONS, SURFACE-MOUNTING KIT.

DIRECT/INDIRECT LED LUMINAIRE

REVISED:	NOVEMBER 2020	LIGHTING PLATE:	NL–1

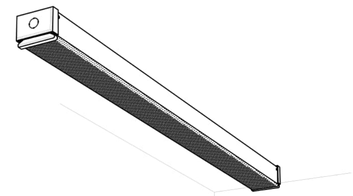

NOTE: THIS SKETCH IS A NON-PROPRIETARY GRAPHIC REPRESENTATION OF A LUMINAIRE THAT MAY MEET THE SPECIFICATION REQUIREMENTS. IT IS NOT INTENDED TO INDICATE A CERTAIN MANUFACTURER OR PREFERENCE.

LUMINAIRE REQUIREMENTS:

1. HOUSING – WELDED STEEL HOUSING WITH SNAP-ON END CAPS. SIZE AS INDICATED IN LUMINAIRE SCHEDULE.
2. OPTICS – DIFFUSE ACRYLIC LENS.
3. LIGHT SOURCE – SOLID STATE LEDS, 3500K CCT UON, MINIMUM 80 CRI UON, AND MINIMUM EFFICACY OF 90 LUMENS/WATT UON. INITIAL LUMEN OUTPUT AS INDICATED IN LUMINAIRE SCHEDULE.
4. DRIVER – REPLACEABLE, INTEGRAL, HIGH-EFFICIENCY DIMMABLE DRIVER WITH MINIMUM 0.9 PF, OPERATING VOLTAGE OF 120–277V, THERMAL MANAGEMENT, AND < 20% THD. ON/OFF CONTROL AND FULLY DIMMABLE DOWN TO 10% MINIMUM OR AS INDICATED IN LUMINAIRE SCHEDULE.
5. CERTIFICATION – UL LISTED FOR DAMP LOCATION, ROHS COMPLIANT. DLC QUALIFIED. COMPLIES WITH IES LM79, LM80 AND TM21 TESTING STANDARDS.
6. MOUNTING – PENDANT MOUNTED WITH STAINLESS STEEL MOUNTING HARDWARE.
7. OPTIONS – EMERGENCY BATTERY BACK-UP, WIREGUARD, VARIOUS PROFILE DIMENSIONS AND RUN LENGTHS, AND VARIOUS CLEAR OR FROSTED POLYCARBONATE LENSES.

LED INDUSTRIAL LIGHT

REVISED:	NOVEMBER 2020	LIGHTING PLATE:	NL–23

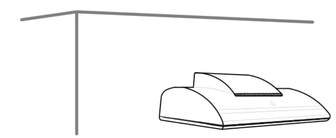

NOTE: THIS SKETCH IS A NON-PROPRIETARY GRAPHIC REPRESENTATION OF A LUMINAIRE THAT MAY MEET THE SPECIFICATION REQUIREMENTS. IT IS NOT INTENDED TO INDICATE A CERTAIN MANUFACTURER OR PREFERENCE.

LUMINAIRE REQUIREMENTS:

1. HOUSING – DIE-CAST ALUMINUM WITH INTEGRAL PASSIVE COOLING MECHANISM. HEAT SINK INCORPORATED DIRECTLY INTO HOUSING COMPARTMENT.
2. OPTICS – PRECISION MOLDED ACRYLIC LENS WITH TYPE IV DISTRIBUTION. BUG UPLIGHT RATING OF U0, WITH GLARE RATING AS DETERMINED BY LIGHTING ZONE INSTALLED.
3. LIGHT SOURCE – SOLID STATE LEDS, 4000K CCT UON, MINIMUM 70 CRI UON, AND MINIMUM EFFICACY OF 80 LUMENS/WATT UON. INITIAL LUMEN OUTPUT AS INDICATED IN LUMINAIRE SCHEDULE.
4. DRIVER – REPLACEABLE, INTEGRAL, HIGH-EFFICIENCY DIMMABLE DRIVER WITH MINIMUM 0.9 PF, OPERATING VOLTAGE OF 120–277V, THERMAL MANAGEMENT, AND < 20% THD. ON-OFF CONTROL AND FULLY DIMMABLE DOWN TO 10% MINIMUM OR AS INDICATED IN LUMINAIRE SCHEDULE.
5. CERTIFICATION – UL LISTED FOR WET LOCATION, ROHS COMPLIANT. COMPLIES WITH IES LM79, LM80 AND TM21 TESTING STANDARDS.
6. MOUNTING – SURFACE MOUNTED WITH STAINLESS STEEL MOUNTING HARDWARE.
7. OPTIONS – VARIOUS LIGHT DISTRIBUTIONS. BATTERY BACK-UP.

LED WALL PACK

REVISED:	NOVEMBER 2020	LUMINAIRE PLATE:	XL–10

NOTE: THIS SKETCH IS A NON-PROPRIETARY GRAPHIC REPRESENTATION OF A LUMINAIRE THAT MAY MEET THE SPECIFICATION REQUIREMENTS. IT IS NOT INTENDED TO INDICATE A CERTAIN MANUFACTURER OR PREFERENCE.

LUMINAIRE REQUIREMENTS:

1. HOUSING – HIGH-IMPACT, UV-STABILIZED, INJECTION-MOLDED THERMOPLASTIC.
2. LIGHT SOURCE – SOLID STATE LEDS.
3. DRIVER – INTEGRAL, HIGH-EFFICIENCY DRIVER WITH MINIMUM 0.9 PF, OPERATING VOLTAGE OF 120/277V, THERMAL MANAGEMENT, AND < 20% THD.
4. CERTIFICATION – NFPA 101, UL LISTED FOR DAMP LOCATION, AND ROHS COMPLIANT.
5. MOUNTING – SURFACE MOUNTED ON CEILING AND/OR WALL.
6. OPTIONS – RED LETTERING, ONE- OR TWO-SIDED. BATTERY BACKUP.

EXIT SIGN

REVISED:	NOVEMBER 2020	LIGHTING PLATE:	NL–28

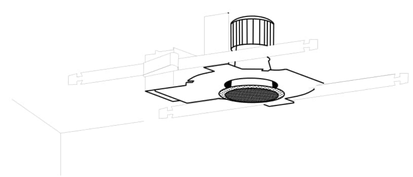

NOTE: THIS SKETCH IS A NON-PROPRIETARY GRAPHIC REPRESENTATION OF A LUMINAIRE THAT MAY MEET THE SPECIFICATION REQUIREMENTS. IT IS NOT INTENDED TO INDICATE A CERTAIN MANUFACTURER OR PREFERENCE.

LUMINAIRE REQUIREMENTS:

1. HOUSING – COLD-ROLLED STEEL WITH HEAT SINK. APERTURE SIZE AND SHAPE AS INDICATED IN LUMINAIRE SCHEDULE.
2. LIGHT SOURCE – SOLID STATE LEDS, 3500K CCT UON, MINIMUM 80 CRI UON, AND MINIMUM EFFICACY OF 70 LUMENS/WATT UON. INITIAL LUMEN OUTPUT AS INDICATED IN LUMINAIRE SCHEDULE.
3. DRIVER – REPLACEABLE, INTEGRAL, HIGH-EFFICIENCY DIMMABLE DRIVER WITH MINIMUM 0.9 PF, OPERATING VOLTAGE OF 120–277V, THERMAL MANAGEMENT, AND < 20% THD. ON/OFF CONTROL AND FULLY DIMMABLE DOWN TO 10% MINIMUM OR AS INDICATED IN LUMINAIRE SCHEDULE.
4. CERTIFICATION – UL LISTED FOR DRY OR DAMP LOCATION, ROHS COMPLIANT. COMPLIES WITH IES LM79, LM80 AND TM21 TESTING STANDARDS.
5. MOUNTING – RECESSED IN ACOUSTICAL TILE CEILING. PROVIDE T-BAR HANGERS FOR INSTALLATION IN ACOUSTICAL TILE CEILINGS.
6. OPTIONS – EMERGENCY BATTERY BACK-UP, VARIOUS ACRYLIC OR POLYCARBONATE LENSES, REFLECTORS, LOUVERS AND TRIMS. VARIOUS BEAM ANGLES. IC RATED HOUSING.

FIXED RECESSED DOWNLIGHT

REVISED:	NOVEMBER 2020	LIGHTING PLATE:	NL–12

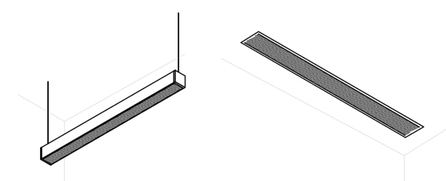

NOTE: THIS SKETCH IS A NON-PROPRIETARY GRAPHIC REPRESENTATION OF A LUMINAIRE THAT MAY MEET THE SPECIFICATION REQUIREMENTS. IT IS NOT INTENDED TO INDICATE A CERTAIN MANUFACTURER OR PREFERENCE.

LUMINAIRE REQUIREMENTS:

1. HOUSING – HEAVY GAUGE COLD ROLLED STEEL, SIZE AS INDICATED IN LUMINAIRE SCHEDULE.
2. OPTICS – SATIN ACRYLIC FLUSH LENS. LAMBERTIAN LIGHT DISTRIBUTION.
3. LIGHT SOURCE – SOLID STATE LEDS, 3500K CCT UON, MINIMUM 80 CRI UON, AND MINIMUM EFFICACY OF 90 LUMENS/WATT UON. INITIAL LUMEN OUTPUT AS INDICATED IN LUMINAIRE SCHEDULE.
4. DRIVER – REPLACEABLE, INTEGRAL, HIGH-EFFICIENCY DRIVER WITH MINIMUM 0.9 PF, OPERATING VOLTAGE OF 120–277V, THERMAL MANAGEMENT, AND < 20% THD. ON-OFF CONTROL AND FULLY DIMMABLE DOWN TO 10% MINIMUM OR AS INDICATED IN LUMINAIRE SCHEDULE.
5. CERTIFICATION – UL LISTED FOR WET LOCATION, ROHS COMPLIANT, DLC QUALIFIED. COMPLIES WITH IES LM79, LM80 AND TM21 TESTING STANDARDS.
6. MOUNTING – RECESSED IN ACOUSTICAL TILE CEILING.
7. OPTIONS – VARIOUS PROFILE DIMENSIONS AND RUN LENGTHS, AND VARIOUS CLEAR OR FROSTED POLYCARBONATE LENSES, BAFFLES, OR LOUVERS.

LINEAR LED SLOT

REVISED:	NOVEMBER 2020	LIGHTING PLATE:	NL–4

SYM	DESCRIPTION	DATE	APPR

NAVFAC

COMMONWEALTH OF VIRGINIA
KELLEY BOURASSA
LIC. NO. 0402061759
6/23/2025
PROFESSIONAL ENGINEER
SEAL

Jacobs
1100 NORTH GLEBE ROAD
SUITE 500
ARLINGTON, VIRGINIA 22201
571.218.1000
FAX: 571.218.1600

A/E INFO

APPROVED
FOR COMMANDER NAVFAC
ACTIVITY
APPROVED BY LCDR ELIZABETH OLOKODE NAVFAC NLON FEAD DIRECTOR NEW LONDON, GROTON, CT

SATISFACTORY TO DATE	05/27/2025
DES JHP / DRW JHP / CHK KB	
PMDM	SMS/CWJ
BRANCH MANAGER	WRB
CHIEF ENGARCH	JWJ
FIRE PROTECTION	HPN

DEPARTMENT OF THE NAVY
NAVAL FACILITIES ENGINEERING SYSTEMS COMMAND
MID-ATLANTIC
NAVAL FACILITIES ENGINEERING SYSTEMS COMMAND - MID-ATLANTIC
NAVAL STATION - NORFOLK, VA
NAVAL SUBMARINE BASE NEW LONDON
GROTON, CONNECTICUT
P-1102 WEAPONS MAGAZINE & ORDNANCE OPERATIONS FACILITY
SENTRY
ELECTRICAL DETAILS

SCALE:	AS NOTED
EPROJECT NO.:	1667770
CONSTR. CONTR. NO.	
NAVFAC DRAWING NO.	12894139
SHEET	51 OF 65

E-502

6/19/2025 5:02:50 PM E-502
\\DL11V001\Revit\FDZE1629\ELEC\BLDG-1667770-E-BIM_SENTRY_v21.rvt

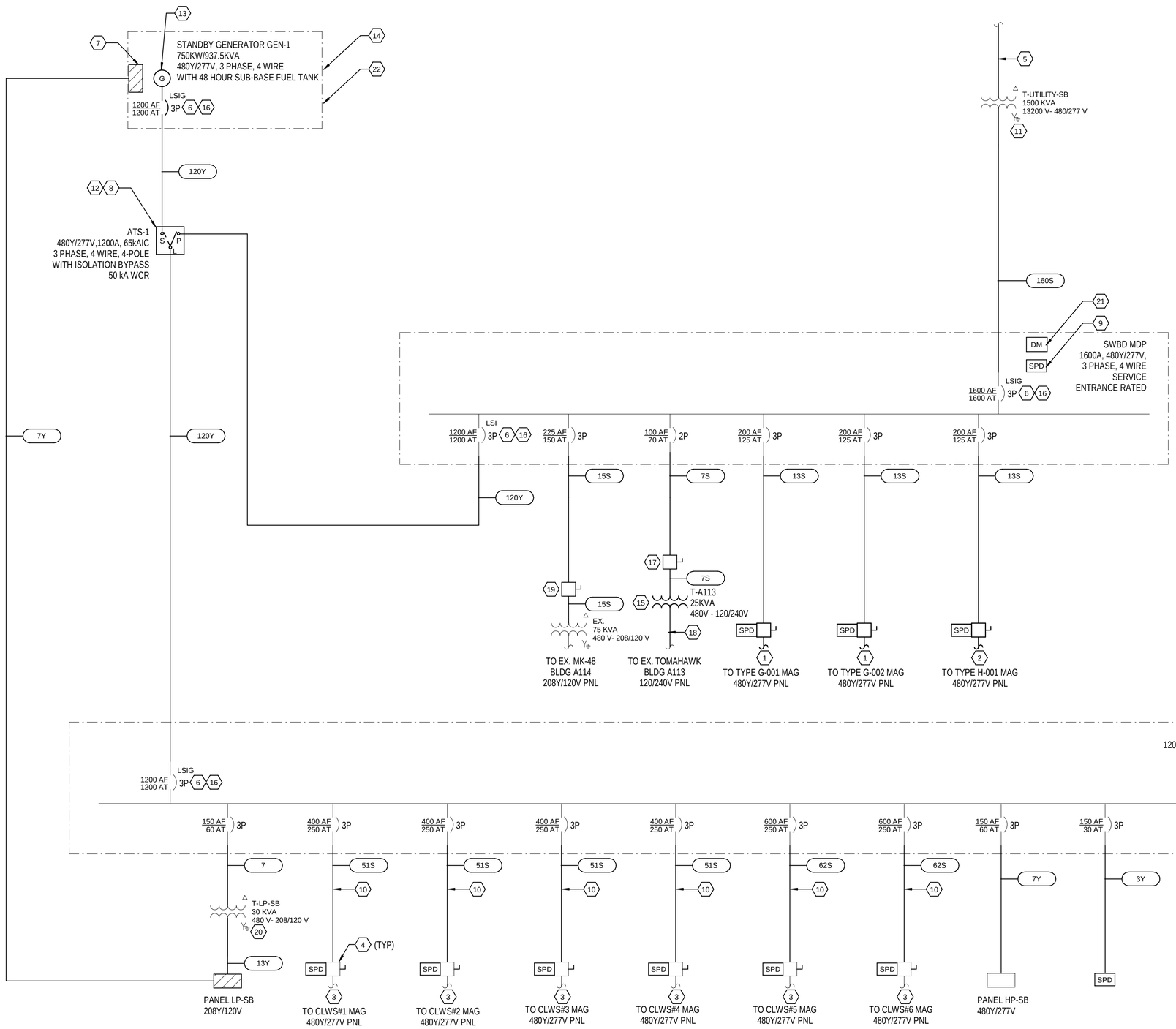

A1 SINGLE LINE DIAGRAM - SENTRY BUILDING

NTS

GENERAL SHEET NOTES

A. REFER TO SHEETS E-001 THROUGH E-004 FOR ADDITIONAL ELECTRICAL INFORMATION.

B. REFER TO SHEET E-703 FOR FEEDER SCHEDULE.

C THE STANDBY POWER SYSTEMS MUST MEET THE REQUIREMENTS OF NEC ARTICLE 702, OPTIONAL STANDBY.

SHEET KEYNOTES

1. REFER TO TYPE G MAGAZINE SITE-ADAPTED ELECTRICAL DRAWINGS FOR ADDITIONAL INFORMATION.
2. REFER TO TYPE H MAGAZINE SITE-ADAPTED ELECTRICAL DRAWINGS FOR ADDITIONAL INFORMATION.
3. REFER TO TYPE CLWS BOX MAGAZINE SITE-ADAPTED ELECTRICAL DRAWINGS FOR ADDITIONAL INFORMATION.
4. DISCONNECT WITH INTEGRAL SURGE PROTECTIVE DEVICE SHOWN IS LOCATED ON EXTERIOR WALL OF ASSOCIATED MAGAZINE. REFER TO RESPECTIVE MAGAZINE TYPE SITE-ADAPTED ELECTRICAL DRAWINGS FOR ADDITIONAL INFORMATION.
5. MV FEEDERS TO UTILITY TRANSFORMER. REFER TO ELECTRICAL SITE PACKAGE FOR ADDITIONAL INFORMATION.
6. PROVIDE 100% RATED BREAKER.
7. PROVIDE 60A MCB, 208Y/120V, 3-PHASE, 4-WIRE PANELBOARD "GEN" INSIDE GENERATOR ENCLOSURE AND FEED FROM PANELBOARD LP-SB. REFER TO SHEET E-702 FOR ADDITIONAL INFORMATION REGARDING GENERATOR APPURTENANCE CIRCUITS. COORDINATE WITH GENERATOR MANUFACTURER FOR FINAL SIZE REQUIRED OF APPURTENANCES AND ADJUST CIRCUIT SIZE ACCORDINGLY.
8. PROVIDE CONTROL AND ANNUNCIATOR WIRING IN 1"C BETWEEN AUTOMATIC TRANSFER SWITCH AND GENERATOR FOR GENERATOR AUTO-ON SIGNAL.
9. PROVIDE INTEGRAL SURGE PROTECTIVE DEVICE IN MAIN SWBD MDP-1.
10. FEEDERS ARE UPSIZED TO ACCOUNT FOR VOLTAGE DROP TO CLWS MAGAZINES.
11. PROVIDE #3/0 GEC.
12. PROVIDE SPD AT ATS.
13. BOND GENERATOR NEUTRAL TO GROUND BUS TO CREATE SEPARATELY DERIVED SYSTEM FOR USE WITH 4-POLE ATS. GENERATOR MUST BE SOLIDLY GROUNDED.
14. PROVIDE REMOTE EMERGENCY OFF BUTTON AT GENERATOR ENCLOSURE.
15. PROVIDE TRANSFORMER IN NEMA 4X ENCLOSURE, RATING AS SHOWN AT EXISTING MAGAZINE NOTED. PROVIDE #6AWG GEC. TRANSFORMER IS LOCATED OUTSIDE OF EXISTING MAGAZINE. REFER TO ELECTRICAL SITE PACKAGE FOR EQUIPMENT LOCATION.
16. PROVIDE ELECTRONIC TRIP TYPE CIRCUIT BREAKER.
17. PROVIDE 600V, 100A, 2P NONFUSED DISCONNECT SWITCH IN NEMA 4X ENCLOSURE. SWITCH IS LOCATED OUTSIDE OF EXISTING MAGAZINE. REFER TO ELECTRICAL SITE PACKAGE FOR EQUIPMENT LOCATION.
18. REMOVE AND REPLACE EXISTING FEEDER FROM TRANSFORMER SECONDARY SIDE TO EXISTING DISCONNECT SWITCH SERVING THE EXISTING MAGAZINE. CONDUIT AND CONDUCTOR SIZE MUST MATCH EXISTING.
19. PROVIDE 600V, 200A, 3P NONFUSED DISCONNECT SWITCH IN NEMA 4X ENCLOSURE. SWITCH IS LOCATED OUTSIDE OF EXISTING MAGAZINE. REFER TO ELECTRICAL SITE PACKAGE FOR EQUIPMENT LOCATION.
20. PROVIDE #6 GEC.
21. PROVIDE INTEGRAL DIGITAL METERING IN MAIN SWBD MDP-1. METER MUST BE EIG SHARK 270. COORDINATE WITH SWBD MANUFACTURER TO PROVIDE ALL NECESSARY CT'S AND OTHER ACCESSORIES NEEDED FOR PROPER FUNCTION.
22. REFER TO SHEET ES103 ON THE ELECTRICAL SITE PACKAGE FOR LOCATION OF GENERATOR.

SYM	DESCRIPTION	DATE	APPR

NAVFAC

COMMONWEALTH OF VIRGINIA
KELLEY BOURASSA
Lic. No. 0402061759
6/23/2025
PROFESSIONAL ENGINEER
SEAL

Jacobs
1100 NORTH GLEBE ROAD
SUITE 500
ARLINGTON, VIRGINIA 22201
571.218.1000
FAX: 571.218.1600

A/E INFO

APPROVED
FOR COMMANDER NAVFAC
ACTIVITY
APPROVED BY LCDR ELIZABETH OLOKODE NAVFAC N.LON FEAD DIRECTOR NEW LONDON, GROTON, CT
SATISFACTORY TO DATE 05/27/2025

DES	DRW	CHK
JHP	JHP	KB

PM/DM	SMS/CWJ
BRANCH MANAGER	WRB
CHIEF ENG/ARCH	JWJ
FIRE PROTECTION	HPN

DEPARTMENT OF THE NAVY
NAVAL FACILITIES ENGINEERING SYSTEMS COMMAND
MID-ATLANTIC
NAVAL FACILITIES ENGINEERING SYSTEMS COMMAND - MID-ATLANTIC
NAVAL SUBMARINE BASE NEW LONDON
NAVAL STATION - NORFOLK, VA
GROTON, CONNECTICUT
P-1102 WEAPONS MAGAZINE & ORDNANCE OPERATIONS FACILITY
SENTRY
ELECTRICAL POWER SINGLE LINE DIAGRAM

SCALE: AS NOTED
EPROJECT NO.: 1667770
CONSTR. CONTR. NO.
NAVFAC DRAWING NO. 12894140
SHEET 52 OF 65
E-601

6/18/2025 5:02:56 PM E-601
\\ac1vs01\filegp\PDZE1638\EL\ECBLDG-1667770-E-BIM_SENTRY_v21.rvt

PLATE	TAG	DESCRIPTION	LAMP TYPE	WATTS	LUMENS	MINIMUM EMERGENCY LUMENS	Lamp Color	Lamp Color Render Index	LUMINAIRE MOUNTING METHOD	VOLTAGE	DIMMING
NL-1	C2	RECESSED DIRECT/INDIRECT 2X4 FIXTURE, WHITE HOUSING	LED	41 W	4000 lm	0 lm	3500 K	80	RECESSED	277 V	0-10V
NL-1	C2E	RECESSED DIRECT/INDIRECT 2X4 FIXTURE WITH INTEGRAL BATTERY RATED FOR 90 MIN., WHITE HOUSING	LED	41 W	4000 lm	1400 lm	3500 K	80	RECESSED	277 V	0-10V
NL-12	D6E	6" RECESSED DOWNLIGHT, WET LOCATION RATED, WITH INTEGRAL BATTERY RATED FOR 90 MIN., WHITE HOUSING	LED	20 W	2000 lm	1200 lm	3500 K	85	RECESSED	277 V	0-10V
NL-23	P2	2' INDUSTRIAL STRIP FIXTURE WITH WIREGUARD AND MOUNTED AT 10'-0", WHITE HOUSING	LED	25 W	3500 lm	0 lm	3500 K	80	PENDANT	277 V	0-10V
NL-23	P4	4' INDUSTRIAL STRIP FIXTURE WITH WIREGUARD AND MOUNTED AT 10'-0", WHITE HOUSING	LED	32 W	4000 lm	0 lm	3500 K	80	PENDANT	277 V	0-10V
NL-23	P4E	4' INDUSTRIAL STRIP FIXTURE WITH INTEGRAL BATTERY RATED FOR 90 MIN., WIREGUARD, AND MOUNTED AT 10'-0" AFF, WHITE HOUSING	LED	32 W	4000 lm	1500 lm	3500 K	80	PENDANT	277 V	0-10V
NL-4	R1	RECESSED 4" X 2' LINEAR LED FIXTURE, WET LOCATION RATED, WHITE HOUSING	LED	8 W	800 lm	0 lm	3500 K	80	RECESSED	277 V	0-10V
XL-10	W1E	WALL PACK LIGHTING FIXTURE WITH INTEGRAL BATTERY RATED FOR 90 MIN., WET RATED, AND MOUNTED AT 10'-0" AFF, DARK BRONZE HOUSING	LED	12 W	1500 lm	1000 lm	4000 K	70	SURFACE	277 V	0-10V
NL-28	X2	EXIT LIGHT - CEILING MOUNTED WITH INTEGRAL BATTERY RATED FOR 90 MIN. RED LETTERING	LED	3 W	270 lm	0 lm	0 K	0	CEILING	277 V	NON-DIMMING

GENERAL NOTES - LIGHT FIXTURE SCHEDULE

1. LIGHTING FIXTURES, INSTALLATION, SUPPORT, WIRING AND RELATED WORK MUST COMPLY WITH GENERAL NOTES, FIXTURE SCHEDULE, LAMP/DRIVER REQUIREMENT TABLES, FIXTURE DETAILS, SPECIFICATIONS AND CONTRACT DRAWINGS.
2. PROVIDE ACCESSORIES REQUIRED FOR A COMPLETE INSTALLATION AND COORDINATE WITH WORK BY OTHER TRADES. RECESSED FIXTURES MUST BE COMPLETELY SERVICEABLE FROM THE FIXTURE OPENING. PROVIDE REQUIRED MOUNTING HARDWARE, SUPPORTS, ACCESSORIES, AND TRIM REQUIRED FOR A COMPLETE INSTALLATION. COORDINATE FIXTURE MOUNTING WITH CEILING AND WALL CONSTRUCTION WHERE INSTALLED. PROVIDE SEPARATION BETWEEN RECESSED FIXTURES AND SURROUNDING INSULATION TO COMPLY WITH UL LISTING REQUIREMENTS AND MANUFACTURER INSTRUCTIONS.
3. FIXTURES MUST BE CBM APPROVED, LISTED AND LABELED BY ETL OR UL FOR DRY, DAMP, WET OR HAZARDOUS/CLASSIFIED LOCATIONS FOR THE INSTALLATION, UNLESS MORE STRINGENT REQUIREMENTS ARE INDICATED OR SPECIFIED.
4. DRIVERS MUST BE CBM APPROVED AND LISTED BY ETL OR UL. PROVIDE INTERNAL GREEN GROUNDING SCREW FOR FIXTURES.
5. WHERE EMERGENCY FIXTURES ARE UNSWITCHED, CONNECT EMERGENCY LIGHTING UNITS AND FIXTURES WITH EMERGENCY BATTERY PACKS TO PROVIDE ILLUMINATION AUTOMATICALLY UPON THE LOSS OF NORMAL POWER. WHERE EMERGENCY FIXTURES ARE SWITCHED, UPON THE LOSS OF NORMAL UNSWITCHED POWER, THE EMERGENCY BATTERY PACK MUST PROVIDE ILLUMINATION AUTOMATICALLY REGARDLESS OF SWITCH POSITION.
6. THE MANUFACTURERS AND MODELS LISTED ON THE LIGHTING FIXTURE SCHEDULE ARE LISTED TO INDICATE THE OVERALL LEVEL OF QUALITY REQUIRED, AND LISTING OF A MANUFACTURER OR MODEL DOES NOT AMEND OR SUPERCEDE LIGHTING FIXTURE REQUIREMENTS SPECIFIED OR INDICATE. LIGHTING FIXTURES MUST COMPLY WITH DRAWING AND SPECIFICATION REQUIREMENTS. REFER TO SPECIFICATIONS FOR ADDITIONAL REQUIREMENTS.
7. EMERGENCY LIGHT FIXTURES MUST BE DESIGNED SUCH THAT FAILURE OF (1) LED DOES NOT CAUSE ENTIRE FIXTURE TO NOT ILLUMINATE, PER NEC 700.16.

LIGHTING CONTROL MATRIX

SPACE TYPE	MANUAL ON	MANUAL OFF	MANUAL ADJUST	MANUAL OVERRIDE	TIMER ON	TIMER OFF	OCCUPANCY ON TO 100%	OCCUPANCY ON TO 50%	VACANCY OFF	VACANCY TO 50%	DAYLIGHT ADJUST	PHOTOCELL ON	PHOTOCELL OFF	SEQUENCE OF OPERATION	NOTES
ELECTRICAL / UTILITY ROOM	X	X												SOO A	ELECTRICAL 003, PLUMBING 004
PRIVATE OFFICE	X	X	X						X					SOO B	GATE/SENTRY HOUSE 001
RESTROOM	X	X					X		X					SOO C	TOILET 002
EXTERIOR LIGHTING					X							X	X	SOO D	EXTERIOR BUILDING LIGHTING

SOO A	LINE VOLTAGE MANUAL ON/OFF CONTROLS ONLY.
SOO B	LIGHTS CONTROLLED BY LOCAL 3 BUTTON DIMMING SWITCH PROGRAMMED TO 0% / 50% / 100% LIGHT OUTPUT WITH RAISE LOWER OPTIONS. OCCUPANCY SENSOR MUST TURN LIGHTS OFF WHEN SPACE IS VACANT MORE THAN 15 MINUTES.
SOO C	LIGHTS WILL TURN ON TO 100% LIGHT OUTPUT BY OCCUPANCY SENSOR AND TURN OFF WHEN SPACE IS VACANT MORE THAN 15 MINUTES. LIGHTS MAY ALSO BE CONTROLLED BY MANUAL ON/OFF SWITCH.
SOO D	LIGHTS MUST TURN ON AT DUSK. AUTOMATICALLY REDUCE LIGHTING POWER BY A MINIMUM OF 30% FROM 12 MIDNIGHT OR WITHIN ONE HOUR OF NORMAL CLOSING, WHICHEVER IS LATER, UNTIL 6AM OR NORMAL OPENING, WHICHEVER IS EARLIER. AUTOMATICALLY TURN OFF VIA PHOTOCELL WHEN SUFFICIENT DAYLIGHT IS AVAILABLE.

SYM	DESCRIPTION	DATE	APPR

NAVFAC

COMMONWEALTH OF VIRGINIA
KELLEY BOURASSA
LIC. NO. 040202617759
6/23/2025
PROFESSIONAL ENGINEER
SEAL

Jacobs
1100 NORTH GLEBE ROAD
SUITE 500
ARLINGTON, VIRGINIA 22201
571.218.1000
FAX: 571.218.1600

A/E INFO

APPROVED
FOR COMMANDER NAVFAC 3/14/2025
ACTIVITY
APPROVED BY LCDR ELIZABETH OLOKODE NAVFAC NLON FEAD DIRECTOR NEW LONDON, GROTON, CT
SATISFACTORY TO DATE 05/27/2025

DES JHP	DRW JHP	CHK KB	
PM/DM	SMS/CWJ		
BRANCH MANAGER	WRB		
CHIEF ENG/ARCH	JWJ		
FIRE PROTECTION	HPN		

DEPARTMENT OF THE NAVY
NAVAL FACILITIES ENGINEERING SYSTEMS COMMAND - MID-ATLANTIC
NAVAL FACILITIES ENGINEERING SYSTEMS COMMAND
MID-ATLANTIC
NAVAL STATION - NORFOLK, VA
NAVAL SUBMARINE BASE NEW LONDON
GROTON, CONNECTICUT
P-1102 WEAPONS MAGAZINE & ORDNANCE OPERATIONS FACILITY
SENTRY
LIGHTING FIXTURE AND CONTROLS SCHEDULES

SCALE: AS NOTED
EPROJECT NO.: 1667770
CONSTR. CONTR. NO.
NAVFAC DRAWING NO. 12894141
SHEET 53 OF 65
E-701

6/19/2025 5:02:57 PM E-701
\\dc1vs01\fleet\P\P02E1628\ELEC\BLDG-1667770-E-BIM_SENTRY_v21.rvt

SWITCHBOARD: MDP

LOCATION: ELECTRICAL 003
SUPPY FROM: T-UTILITY-SB
MOUNTING: Surface
ENCLOSURE: Type 1

VOLTAGE: 480/277V,3P,4W,60Hz
BUS AMPS: 1600A
MCB FRAME / MCB TRIP: 1600 A / 1600 A

INTERRUPTING RATING (kA SYMMETRICAL): 35 kA
GROUND BUS: EQUIP. ONLY
NEUTRAL BUS RATING: 100%
ACCESSORY LUGS: NONE

NOTES	LOAD CLASS	DESCRIPTIONS	FRAME	TRIP AMPS	POLES	CKT NO.	A	B	C	A	B	C	CKT NO.	POLES	TRIP AMPS	FRAME	DESCRIPTIONS	LOAD CLASS	NOTES
	Spare; LTG; REC;...	MDP-SB VIA ATS-1	1200 A	1200 A	3	1	288.076			24.833			2	3	125 A	200 A	BOX H MAGAZINE	Other	
						3		284.129			24.833		4						
						5			285.811			24.833	6						
	Other	BOX G#1 MAGAZINE	200 A	125 A	3	7	19.867			19.867			8	3	125 A	200 A	BOX G#2 MAGAZINE	Other	
						9		19.867			19.867		10						
						11			19.867			19.867	12						
	Other	EX. A113 MAGAZINE	100 A	70 A	2	13	5.67			11.2			14	3	150 A	225 A	EX. A114 MK-48 MAGAZINE	Other	
						15		5.67			11.2		16						
	--	SPARE	100 A	100 A	3	17			0			11.2	18						
						19	0			--			20	3	--	--	SPACE	--	
						21		0			--		22						
						23						--	24						
						25							26						
						27							28						
						29							30						

TOTAL CONNECTED LOAD / PHASE: 369.513 kVA | 365.566 kVA | 361.577 kVA

LOAD CLASSIFICATIONS	CONNECTED LOAD	DEMAND FACTOR	ESTIMATED DEMAND
Other	238.64 kVA	100.00%	238.64 kVA
LTG	2.992 kVA	100.00%	2.992 kVA
REC	2.88 kVA	100.00%	2.88 kVA
EQC	15.194 kVA	100.00%	15.194 kVA
EQN	6.55 kVA	100.00%	6.55 kVA
CLWS	830.4 kVA	83.30%	691.723 kVA

TOTAL LOAD SUMMARY

LOAD (kVA)		CURRENT (AMPS)	
CONNECTED LOAD:	1096.656 kVA	CONNECTED CURRENT:	1319.1 A
ESTIMATED DEMAND LOAD:	957.979 kVA	ESTIMATED DEMAND CURRENT:	1152.3 A
ESTIMATED DEMAND FACTOR:	87.35%		
SPARE CAPACITY:	15%		
ESTIMATED LOAD WITH SPARE:	1101.676 kVA	ESTIMATED DEMAND CURRENT W/ SPARE:	1325 A

PANELBOARD NOTES:

PANELBOARD: GEN

LOCATION: GENERATOR ENCLOSURE
SUPPY FROM: LP-SB
MOUNTING: Surface
ENCLOSURE: Type 1

VOLTAGE: 208/120V,3P,4W,60Hz
BUS AMPS: 100 A
MCB FRAME / MCB TRIP: 100 A / 60 A

INTERRUPTING RATING (kA SYMMETRICAL): 14 kA
GROUND BUS: EQUIP. ONLY
NEUTRAL BUS RATING: 100%
ACCESSORY LUGS: NONE

NOTES	LOAD CLASS	DESCRIPTIONS	FRAME	TRIP AMPS	POLES	CKT NO.	A	B	C	A	B	C	CKT NO.	POLES	TRIP AMPS	FRAME	DESCRIPTIONS	LOAD CLASS	NOTES
	EQN	GENERATOR JACKET HEATER	100 A	30 A	2	1	2.1			1.5			2	1	20 A	100 A	BATTERY CHARGER	EQN	
						3		2.1			0.5		4	1	20 A	100 A	LUBE OIL HEATER	EQN	
	REC	REC GENERATOR ENCLOSURE	100 A	20 A	1	5			0.18			0.1	6	1	20 A	100 A	GEN ENCLOSURE LIGHTING	LTG	
	--	SPARE	100 A	20 A	1	7	0			0			8	1	20 A	100 A	SPARE	--	
	--	SPARE	100 A	20 A	1	9		0			0		10	1	20 A	100 A	SPARE	--	
	--	SPACE	--	--	1	11			--			--	12	1	--	--	SPACE	--	
	--	SPACE	--	--	1	13	--			--			14	1	--	--	SPACE	--	
	--	SPACE	--	--	1	15		--			--		16	1	--	--	SPACE	--	
	--	SPACE	--	--	1	17			--			--	18	1	--	--	SPACE	--	

TOTAL CONNECTED LOAD / PHASE: 3.6 kVA | 2.6 kVA | 0.28 kVA

LOAD CLASSIFICATIONS	CONNECTED LOAD	DEMAND FACTOR	ESTIMATED DEMAND
LTG	0.1 kVA	100.00%	0.1 kVA
REC	0.18 kVA	100.00%	0.18 kVA
EQN	6.2 kVA	100.00%	6.2 kVA

TOTAL LOAD SUMMARY

LOAD (kVA)		CURRENT (AMPS)	
CONNECTED LOAD:	6.480 kVA	CONNECTED CURRENT:	18.0 A
ESTIMATED DEMAND LOAD:	6.480 kVA	ESTIMATED DEMAND CURRENT:	18.0 A
ESTIMATED DEMAND FACTOR:	100.00%		
SPARE CAPACITY:	15%		
ESTIMATED LOAD WITH SPARE:	7.452 kVA	ESTIMATED DEMAND CURRENT W/ SPARE:	21 A

PANELBOARD NOTES: 1) UNLESS OTHERWISE NOTED, PROVIDE 2#12 + 1#12G IN 3/4"C FOR 20A/1P CIRCUITS.

PANELBOARD: HP-SB

LOCATION: ELECTRICAL 003
SUPPY FROM: MDP-SB
MOUNTING: Surface
ENCLOSURE: Type 1

VOLTAGE: 480/277V,3P,4W,60Hz
BUS AMPS: 100 A
MCB FRAME / MCB TRIP: 100 A / 60 A

INTERRUPTING RATING (kA SYMMETRICAL): 14 kA
GROUND BUS: EQUIP. ONLY
NEUTRAL BUS RATING: 100%
ACCESSORY LUGS: NONE

NOTES	LOAD CLASS	DESCRIPTIONS	FRAME	TRIP AMPS	POLES	CKT NO.	A	B	C	A	B	C	CKT NO.	POLES	TRIP AMPS	FRAME	DESCRIPTIONS	LOAD CLASS	NOTES
	LTG	EXT. POLE LIGHTS (MAG AREA)	100 A	20 A	1	1	0.7			0.5			2	1	20 A	100 A	EXT. POLE LIGHTS (MAG AREA)	LTG	
	LTG	BUILDING LIGHTING	100 A	20 A	1	3		0.592			1.1		4	1	20 A	100 A	EXT. POLE LIGHTS (MAG AREA)	LTG	
	--	SPARE	100 A	20 A	1	5			0			--	6	1	--	--	SPACE	--	
	--	SPARE	100 A	20 A	1	7	0			--			8	1	--	--	SPACE	--	
	--	SPARE	100 A	20 A	1	9		0			--		10	1	--	--	SPACE	--	
	--	SPARE	100 A	20 A	1	11			0			--	12	1	--	--	SPACE	--	
	--	SPARE	100 A	20 A	1	13	0			--			14	1	--	--	SPACE	--	
	--	SPARE	100 A	20 A	1	15		0			--		16	1	--	--	SPACE	--	
	--	SPARE	100 A	20 A	1	17			0			--	18	1	--	--	SPACE	--	

TOTAL CONNECTED LOAD / PHASE: 1.2 kVA | 1.692 kVA | 0 kVA

LOAD CLASSIFICATIONS	CONNECTED LOAD	DEMAND FACTOR	ESTIMATED DEMAND
LTG	2.892 kVA	100.00%	2.892 kVA

TOTAL LOAD SUMMARY

LOAD (kVA)		CURRENT (AMPS)	
CONNECTED LOAD:	2.892 kVA	CONNECTED CURRENT:	3.5 A
ESTIMATED DEMAND LOAD:	2.892 kVA	ESTIMATED DEMAND CURRENT:	3.5 A
ESTIMATED DEMAND FACTOR:	100.00%		
SPARE CAPACITY:	15%		
ESTIMATED LOAD WITH SPARE:	3.326 kVA	ESTIMATED DEMAND CURRENT W/ SPARE:	4 A

PANELBOARD NOTES: 1) UNLESS OTHERWISE NOTED, PROVIDE 2#12 + 1#12G IN 3/4"C FOR 20A/1P CIRCUITS.

SWITCHBOARD: MDP-SB

LOCATION: ELECTRICAL 003
SUPPY FROM: MDP
MOUNTING: Surface
ENCLOSURE: Type 1

VOLTAGE: 480/277V,3P,4W,60Hz
BUS AMPS: 1200
MCB FRAME / MCB TRIP: 1200 A / 1200 A

INTERRUPTING RATING (kA SYMMETRICAL): 35 kA
GROUND BUS: EQUIP. ONLY
NEUTRAL BUS RATING: 100%
ACCESSORY LUGS: NONE

NOTES	LOAD CLASS	DESCRIPTIONS	FRAME	TRIP AMPS	POLES	CKT NO.	A	B	C	A	B	C	CKT NO.	POLES	TRIP AMPS	FRAME	DESCRIPTIONS	LOAD CLASS	NOTES
	Spare; LTG; REC;...	PANEL LP-SB VIA 30KVA XFMR	150 A	60 A	3	1	10.076			55.333			2	3	250 A	400 A	CLWS #1 MAGAZINE	CLWS	1
						3		5.637			55.333		4						
						5			9.011			55.333	6						
1	CLWS	CLWS #2 MAGAZINE	400 A	250 A	3	7	55.333			41.533			8	3	250 A	400 A	CLWS #3 MAGAZINE	CLWS	
						9		55.333			41.533		10						
						11			55.333			41.533	12						
	CLWS	CLWS #4 MAGAZINE	400 A	250 A	3	13	41.533			41.533			14	3	250 A	600 A	CLWS #5 MAGAZINE	CLWS	
						15		41.533			41.533		16						
						17			41.533			41.533	18						
	CLWS	CLWS #6 MAGAZINE	600 A	250 A	3	19	41.533			1.2			20	3	60 A	150 A	PANEL HP-SB	Spare; LTG	
						21		41.533			1.692		22						
						23			41.533			0	24						
	--	SPARE	100 A	100 A	3	25	0			0			26	3	60 A	100 A	SPARE	--	
						27		0			0		28						
						29			0			0	30						
	--	SPACE	--	--	3	31	--			--			32	3	--	--	SPACE	--	
						33		--			--		34						
						35			--			--	36						
	REC	SPD	150 A	30 A	3	37	0			--			38	3	--	--	SPACE	--	
						39		0			--		40						
						41			0			--	42						

TOTAL CONNECTED LOAD / PHASE: 288.076 kVA | 284.129 kVA | 285.811 kVA

LOAD CLASSIFICATIONS	CONNECTED LOAD	DEMAND FACTOR	ESTIMATED DEMAND
LTG	2.992 kVA	100.00%	2.992 kVA
REC	2.88 kVA	100.00%	2.88 kVA
EQC	15.194 kVA	100.00%	15.194 kVA
EQN	6.55 kVA	100.00%	6.55 kVA
CLWS	830.4 kVA	83.30%	691.723 kVA

TOTAL LOAD SUMMARY

LOAD (kVA)		CURRENT (AMPS)	
CONNECTED LOAD:	858.016 kVA	CONNECTED CURRENT:	1032.0 A
ESTIMATED DEMAND LOAD:	719.339 kVA	ESTIMATED DEMAND CURRENT:	865.2 A
ESTIMATED DEMAND FACTOR:	83.84%		
SPARE CAPACITY:	15%		
ESTIMATED LOAD WITH SPARE:	827.24 kVA	ESTIMATED DEMAND CURRENT W/ SPARE:	995 A

PANELBOARD NOTES: 1. ASSUMPTION IS MADE THAT ONLY (2) OF THE CLWS MAGAZINES WILL EVER HAVE CRANES RUNNING SIMULTANEOUSLY.

PANELBOARD: LP-SB

LOCATION: ELECTRICAL 003
SUPPY FROM: T-LP-SB
MOUNTING: Surface
ENCLOSURE: Type 1

VOLTAGE: 208/120V,3P,4W,60Hz
BUS AMPS: 100 A
MCB FRAME / MCB TRIP: 100 A / 100 A

INTERRUPTING RATING (kA SYMMETRICAL): 14 kA
GROUND BUS: EQUIP. ONLY
NEUTRAL BUS RATING: 100%
ACCESSORY LUGS: NONE

NOTES	LOAD CLASS	DESCRIPTIONS	FRAME	TRIP AMPS	POLES	CKT NO.	A	B	C	A	B	C	CKT NO.	POLES	TRIP AMPS	FRAME	DESCRIPTIONS	LOAD CLASS	NOTES
	REC	REC ELEC 003	100 A	20 A	1	1	0.54			0.72			2	1	20 A	100 A	REC GATE/SENTRY HOUSE 001	REC	
	REC	REC RM 001, 002	100 A	20 A	1	3		0.36			0.18		4	1	20 A	100 A	REC PLUMBING 004	REC	
	EQN	RESTROOM SENSORS	100 A	20 A	1	5			0.2			0.05	6	1	20 A	100 A	ELEC. TRAP PRIMER RM 004	EQN	
	EQC	RACK L6-30R ELEC 003	100 A	30 A	2	7	1.5			0.36			8	1	20 A	100 A	REC EXTERIOR	REC	
						9		1.5			2.08		10	2	30 A	100 A	DHWH-1 RM 002	EQC	
	EQC	CU-1/AC-1	100 A	25 A	2	11			1.581			2.08	12						
						13	1.581			0.915			14	2	20 A	100 A	CU-2/AC-2	EQC	
	EQC	ERV-1	100 A	20 A	1	15		0.042			0.915		16						
	EQC	UH-1	100 A	20 A	2	17			0.75			0.75	18	2	20 A	100 A	UH-2	EQC	
						19	0.75			0.75			20						
	EQN	SECURITY DOOR POWER	100 A	20 A	1	21		0.1			0		22	1	20 A	100 A	SPARE	--	
	--	SPARE	100 A	20 A	1	23			0			3.6	24	3	60 A	100 A	PANELBOARD GEN	Spare; LTG; REC;...	
	REC	TELECOM QUAD ELEC 003	100 A	20 A	1	25	0.36			2.6			26						
	REC	REC PLUMBING 004	100 A	20 A	1	27		0.18			0.28		28						
	--	SPACE	--	--	1	29			--			--	30	1	--	--	SPACE	--	
	--	SPACE	--	--	1	31	--			--			32	1	--	--	SPACE	--	
	--	SPACE	--	--	1	33		--			--		34	1	--	--	SPACE	--	
	--	SPACE	--	--	1	35			--			--	36	1	--	--	SPACE	--	
	--	SPACE	--	--	1	37	--			--			38	1	--	--	SPACE	--	
	--	SPACE	--	--	1	39		--			--		40	1	--	--	SPACE	--	
	--	SPACE	--	--	1	41			--			--	42	1	--	--	SPACE	--	

TOTAL CONNECTED LOAD / PHASE: 10.076 kVA | 5.637 kVA | 9.011 kVA

LOAD CLASSIFICATIONS	CONNECTED LOAD	DEMAND FACTOR	ESTIMATED DEMAND
LTG	0.1 kVA	100.00%	0.1 kVA
REC	2.88 kVA	100.00%	2.88 kVA
EQC	15.194 kVA	100.00%	15.194 kVA
EQN	6.55 kVA	100.00%	6.55 kVA

TOTAL LOAD SUMMARY

LOAD (kVA)		CURRENT (AMPS)	
CONNECTED LOAD:	24.724 kVA	CONNECTED CURRENT:	68.6 A
ESTIMATED DEMAND LOAD:	24.724 kVA	ESTIMATED DEMAND CURRENT:	68.6 A
ESTIMATED DEMAND FACTOR:	100.00%		
SPARE CAPACITY:	15%		
ESTIMATED LOAD WITH SPARE:	28.433 kVA	ESTIMATED DEMAND CURRENT W/ SPARE:	79 A

PANELBOARD NOTES: 1) UNLESS OTHERWISE NOTED, PROVIDE 2#12 + 1#12G IN 3/4"C FOR 20A/1P CIRCUITS.

GENERAL NOTE:

A. PANEL SCHEDULE TOTAL CONNECTED LOAD / PHASE VALUES ARE SUMMATIONS FOR PHASES A, B, AND C FROM LEFT TO RIGHT. (TYPICAL FOR ALL PANEL SCHEDULES SHOWN ON THIS SHEET).

MDP-1	MDP-SB
GEN	LP-SB
HP-SB	

SYM	DESCRIPTION	DATE	APPR

NAVFAC

COMMONWEALTH OF VIRGINIA
KELLEY BOURASSA
Lic. No. 0402061759
6/23/2025
PROFESSIONAL ENGINEER
SEAL

Jacobs
1100 NORTH GLEBE ROAD
SUITE 500
ARLINGTON, VIRGINIA 22201
571.218.1000
FAX: 571.218.1600

A/E INFO

APPROVED
FOR COMMANDER NAVFAC 8/14/2025

ACTIVITY: APPROVED BY LCDR ELIZABETH OLOKODE NAVFAC NLON FEAD DIRECTOR NEW LONDON, GROTON, CT

SATISFACTORY TO DATE 05/27/2025

DES JHP DRW JHP CHK KB
PM/DM SMS/CWJ
BRANCH MANAGER WRB
CHIEF ENG/ARCH JWJ
FIRE PROTECTION HPN

DEPARTMENT OF THE NAVY
NAVAL FACILITIES ENGINEERING SYSTEMS COMMAND
NAVAL FACILITIES ENGINEERING SYSTEMS COMMAND - MID-ATLANTIC
MID-ATLANTIC
NAVAL STATION - NORFOLK, VA
NAVAL SUBMARINE BASE NEW LONDON
GROTON, CONNECTICUT
P-1102 WEAPONS MAGAZINE & ORDNANCE OPERATIONS FACILITY
SENTRY
ELECTRICAL PANEL SCHEDULES

SCALE: AS NOTED
EPROJECT NO.: 1667770
CONSTR. CONTR. NO.
NAVFAC DRAWING NO. 12894142
SHEET 54 OF 65
E-702

6/19/2025 5:02:59 PM E-702
\\ad.jacobs.com\dfs\NA\Proj\HOUSTON\PROJECTS\PF02EL628\ELEC\BLDG-1667770-E-BIM_SENTRY_v21.rvt

FEEDER SCHEDULE

TAG	CONDUCTORS AND CONDUIT	MAX CURRENT
2	(3) #12 + #12G IN 3/4"C	20 A
2K	(3) #12 + #8N + #12G IN 3/4"C	20 A
2Y	(3) #12 + #12N + #12G IN 3/4"C	20 A
3	(3) #10 + #10G IN 3/4"C	30 A
3K	(3) #10 + #4N + #10G IN 1"C	30 A
3Y	(3) #10 + #10N + #10G IN 3/4"C	30 A
4	(3) #8 + #10G IN 3/4"C	40 A
4K	(3) #8 + #1N + 10G IN 1"C	40 A
4Y	(3) #8 + #8N + #10G IN 3/4"C	40 A
5	(3) #6 + #10G IN 3/4"C	55 A
5K	(3) #6 + #1N + #10G IN 1 1/4"C	55 A
5Y	(3) #6 + #6N + #10G IN 1"C	55 A
7	(3) #4 + #8G IN 1"C	70 A
7S	(2) #4 + #8G IN 4"C	70 A
7Y	(3) #4 + #4N + #8G IN 1 1/4"C	70 A
9	(3) #2 + #8G IN 1 1/4"C	95 A
9K	(3) #2 + #3/0N + #8G IN 1 1/2"C	95 A
9Y	(3) #2 + #2N + #8G IN 1 1/4"C	95 A
13	(3) #1 + #6G IN 1 1/2"C	130 A
13S	(3) #1 + (1) #1N + #6G IN 4"C	130 A
13Y	(3) #1+ #1N + #6G IN 1 1/2"C	130 A
15	(3) #1/0 + #6G IN 1 1/2"C	150 A
15S	(3) #1/0 + #6G IN 4"C	150 A
15Y	(3) #1/0 +(1) #1/0N + #6G IN 1 1/2"C	150 A
17	(3) #2/0 + #6G IN 2"C	175 A
17K	(3) #2/0 + (2) #2/0N + #6G IN 2"C	175 A
17Y	(3) #2/0 + #2/0N + #6G IN 2"C	175 A
20	(3) #3/0 + #6G IN 2"C	200 A
20K	(3) #3/0 + (2) #3/0N + #6G IN 2 1/2"C	200 A
20Y	(3) #3/0 + #3/0N + #6G IN 2"C	200 A

FEEDER SCHEDULE

TAG	CONDUCTORS AND CONDUIT	MAX CURRENT
23	(3) #4/0 + #4G IN 2"C	230 A
23K	(3) #4/0 + (2) #4/0N + #4G IN 2 1/2"C	230 A
23Y	(3) #4/0 + #4/0N + #4G IN 2 1/2"C	230 A
25	(3) 250 kcmil + #4G IN 2 1/2"C	255 A
25K	(3) 250 kcmil + (2) 250 kcmil N + #4G IN 2 1/2"C	255 A
25Y	(3) 250 kcmil + 250 kcmil N + #4G IN 2 1/2"C	255 A
28	(3) 300 kcmil + #4G IN 2 1/2"C	285 A
28K	(3) 300 kcmil + (2) 300 kcmil N + #4G IN 3"C	285 A
28Y	(3) 300 kcmil + 300 kcmil N + #4G IN 2 1/2"C	285 A
31	(3) 350 kcmil + #1G IN 2 1/2"C	310 A
31K	(3) 350 kcmil + (2) 350 kcmil N + #1G IN 3"C	310 A
31Y	(3) 350 kcmil + 350 kcmil N + #1G IN 3"C	310 A
33	(3) 400 kcmil + #1G IN 2 1/2"C	335 A
33K	(3) 400 kcmil + (2) 400 kcmil N + #1G IN 3"C	335 A
33Y	(3) 400 kcmil + 400 kcmil N + #1G IN 3"C	335 A
38	(3) 500 kcmil + #1G IN 3"C	380 A
38K	(3) 500 kcmil + (2) 500 kcmil N + #1G IN 4"C	380 A
38Y	(3) 500 kcmil + 500 kcmil N + #1G IN 3"C	380 A
42	(3) 600 kcmil + #1G IN 3"C	420 A
42K	(3) 600 kcmil + (2) 600 kcmil N + #1G IN 4"C	420 A
42Y	(3) 600 kcmil + 600 kcmil N + #1G IN 4"C	420 A
46	2 SETS OF EACH: (3) #4/0 + #2G IN (2) 2"C	460 A
46K	2 SETS OF EACH: (3) #4/0 + (2) #4/0N + #2G IN (2) 2 1/2"C	460 A
46Y	2 SETS OF EACH: (3) #4/0 + #4/0N + #2G IN (2) 2 1/2"C	460 A
51	2 SETS OF EACH: (3) 250 kcmil + #2G IN (2) 2 1/2"C	510 A
51S	2 SETS OF EACH: (3) 250 kcmil + (1) 250 kcmil N + #2G IN (2) 4"C	510 A
51Y	2 SETS OF EACH: (3) 250 kcmil + 250 kcmil N + #2G IN (2) 2 1/2"C	510 A
62	2 SETS OF EACH: (3) 350 kcmil + #1G IN (2) 2 1/2"C	620 A
62S	2 SETS OF EACH: (3) 350 kcmil + (1) 350 kcmil N + #1G IN (2) 4"C	620 A
62Y	2 SETS OF EACH: (3) 350 kcmil + 350 kcmil N + #1G IN (2) 3"C	620 A

FEEDER SCHEDULE

TAG	CONDUCTORS AND CONDUIT	MAX CURRENT
76	2 SETS OF EACH: (3) 500 kcmil + #1/0G IN (2) 3"C	760 A
76K	2 SETS OF EACH: (3) 500 kcmil + (2) 500 kcmil N + #1/0G IN (2) 4"C	760 A
76Y	2 SETS OF EACH: (3) 500 kcmil + 500 kcmil N + #1/0G IN (2) 3"C	760 A
84	2 SETS OF EACH: (3) 600 kcmil + #1/0G IN (2) 3"C	840 A
84K	2 SETS OF EACH: (3) 600 kcmil + (2) 600 kcmil N + #1/0G IN (2) 4"C	840 A
84Y	2 SETS OF EACH: (3) 600 kcmil + 600 kcmil N + #1/0G IN (2) 4"C	840 A
100	3 SETS OF EACH: (3) 400 kcmil + #2/0G IN (3) 2 1/2"C	1005 A
100K	3 SETS OF EACH: (3) 400 kcmil + (2) 400 kcmil N + #2/0G IN (3) 3"C	1005 A
100Y	3 SETS OF EACH: (3) 400 kcmil + 400 kcmil N + #2/0G IN (3) 3"C	1005 A
120	3 SETS OF EACH: (3) 600 kcmil + #3/0G IN (3) 3"C	1260 A
120K	3 SETS OF EACH: (3) 600 kcmil + (2) 600 kcmil N + #3/0G IN (3) 4"C	1260 A
120Y	3 SETS OF EACH: (3) 600 kcmil + 600 kcmil N + #3/0G IN (3) 4"C	1260 A
160	4 SETS OF EACH: (3) 600 kcmil + #4/0G IN (4) 3"C	1680 A
160S	5 SETS OF EACH: (3) 400 kcmil + (1) 400 kcmil N IN (5) 4"C	1680 A
160Y	4 SETS OF EACH: (3) 600 kcmil + 600 kcmil N + #4/0G IN (4) 4"C	1680 A
210	5 SETS OF EACH: (3) 600 kcmil + 250 kcmil G IN (5) 3"C	2100 A
210K	5 SETS OF EACH: (3) 600 kcmil + (2) 600 kcmil N + 250 kcmil G IN (5) 4"C	2100 A
210Y	5 SETS OF EACH: (3) 600 kcmil + 600 kcmil N + 250 kcmil G IN (5) 4"C	2100 A
250	6 SETS OF EACH: (3) 600 kcmil + 250 kcmil G IN (6) 3"C	2520 A
250K	6 SETS OF EACH: (3) 600 kcmil + (2) 600 kcmil N + 250 kcmil G IN (6) 4"C	2520 A
250Y	6 SETS OF EACH: (3) 600 kcmil + 600 kcmil N + 250 kcmil G IN (6) 4"C	2520 A
300	8 SETS OF EACH: (3) 500 kcmil + 400 kcmil G IN (8) 3"C	3040 A
300K	8 SETS OF EACH: (3) 500 kcmil + (2) 500 kcmil N + 400 kcmil G IN (8) 4"C	3040 A
300Y	8 SETS OF EACH: (3) 500 kcmil + 500 kcmil N + 400 kcmil G IN (8) 4"C	3040 A
420	10 SETS OF EACH: (3) 600 kcmil + 500 kcmil G IN (10) 3"C	4200 A
420K	10 SETS OF EACH: (3) 600 kcmil + (2) 600 kcmil N + 500 kcmil G IN (10) 4"C	4200 A
420Y	10 SETS OF EACH: (3) 600 kcmil + 600 kcmil N + 500 kcmil G IN (10) 4"C	4200 A
500	12 SETS OF EACH: (3) 600 kcmil + (2) 500 kcmil G IN (12) 4"C	5040 A
500K	12 SETS OF EACH: (3) 600 kcmil + (2) 600 kcmil N + (2) 500 kcmil G IN (12) 4"C	5040 A
500Y	12 SETS OF EACH: (3) 600 kcmil + 600 kcmil N + (2) 500 kcmil G IN (12) 4"C	5040 A

FEEDER SCHEDULE NOTES:

1. CONDUCTOR SIZES ARE BASED ON 60˚C RATED COPPER CONDUCTORS WITH 60˚C RATED TERMINATIONS FOR FEEDERS RATED 100A AND LESS. CONDUCTOR SIZES FOR FEEDERS RATED MORE THAN 100A ARE BASED ON 75˚C RATED COPPER CONDUCTORS WITH 75˚C RATED TERMINATIONS.
2. CONDUIT SIZES FOR INDOOR FEEDERS ARE MINIMUM SIZES FOR THHN/THWN IN EMT.
3. WHERE MULTIPLE SETS ARE IDENTIFIED, PROVIDE EACH SET OF PHASE, NEUTRAL, AND GROUNDING CONDUCTORS IN SEPARATE CONDUITS EQUAL TO THE NUMBER OF SETS UNLESS NOTED OTHERWISE.
4. NOT ALL FEEDER SIZES ARE USED IN THIS DRAWING SET.

SYM	DESCRIPTION	DATE	APPR

NAVFAC

COMMONWEALTH OF VIRGINIA
KELLEY BOURASSA
LIC. NO. 0402061759
6/23/2025
PROFESSIONAL ENGINEER
SEAL

Jacobs
1100 NORTH GLEBE ROAD
SUITE 500
ARLINGTON, VIRGINIA 22201
571.218.1000
FAX: 571.218.1600
A/E INFO

APPROVED
FOR COMMANDER NAVFAC 8/11/2025
ACTIVITY
APPROVED BY LCDR ELIZABETH OLOKODE NAVFAC NLON FEAD DIRECTOR NEW LONDON, GROTON, CT
SATISFACTORY TO DATE 05/27/2025

DES	DRW	CHK
JHP	JHP	KB

PM/DM	SMS/CWJ
BRANCH MANAGER	WRB
CHIEF ENG/ARCH	JWJ
FIRE PROTECTION	HPN

DEPARTMENT OF THE NAVY
NAVAL FACILITIES ENGINEERING SYSTEMS COMMAND
NAVAL FACILITIES ENGINEERING SYSTEMS COMMAND - MID-ATLANTIC
MID-ATLANTIC
NAVAL STATION - NORFOLK, VA
NAVAL SUBMARINE BASE NEW LONDON
GROTON, CONNECTICUT
P-1102 WEAPONS MAGAZINE & ORDNANCE OPERATIONS FACILITY
SENTRY
ELECTRICAL FEEDER SCHEDULE

SCALE: AS NOTED
EPROJECT NO.: 1667770
CONSTR. CONTR. NO.
NAVFAC DRAWING NO.
12894143
SHEET 55 OF 65
E-703

6/19/2025 5:03:02 PM E-703
\\dc1-vs01\Redir\PDZE1628\ELEC\BLDG-1667770-E-BIM_SENTRY_v21.rvt

TELECOMMUNICATIONS LEGEND

SYMBOL	DESCRIPTION
C	CEILING MOUTNED CAMERA OUTLET - PROVIDE ONE CAT6 PLENUM (BLUE) DATA CABLE, CONNECTOR, PATCH CORDS, AND TERMINATION AS REQUIRED. ROUTE ONE 1" CONDUIT FROM THE CEILING MOUNTED BOX TO THE TELECOM EQUIPMENT CABINET.
W	WALL PHONE OUTLET - PROVIDE ONE CAT6 PLENUM (WHITE) DROP COMPLETE WITH CABLE, CONNECTORS, PATCH CORDS AND TERMINATION AS REQUIRED. STUB ONE 1" CONDUIT FROM DOUBLE GANG BOX WITH SINGLE GANG PLASTER RING TO CABLE TRAY ON THE SAME FLOOR AS SHOWN. MOUNT AT 54" AFF UNLESS NOTED OTHERWISE.
	WALL STANDARD COMMUNICATION OUTLET - PROVIDE TWO CAT6 PLENUM DATA AND ONE CAT6 PLENUM VOICE DROP COMPLETE WITH CABLES, CONNECTORS, PATCH CORDS, AND TERMINATIONS AS REQUIRED. STUB ONE 1" CONDUIT FROM DOUBLE GANG BOX WITH SINGLE GANG PLASTER RING TO CABLE TRAYJ. MOUNT AT PROJECT'S STANDARD RECEPTACLE HEIGHT UNLESS NOTED OTHERWISE. (DATA#1 BLUE, DATA#2 GREEN, VOICE#1 WHITE)
X	COMMUNICATIONS DATA OUTLET - "X" DENOTES FUNCTION
M	SINGLE CAT6 PLENUM DATA CABLE (BLUE) FOR METER. PROVIDE HOME RUN 1" CONDUIT TO DOUBLE GANG BACKBOX. INCLUDE CONNECTOR, PATCH CORDS, AND TERMINATION AS REQUIRED.
01	4"x4"x4" JUNCTION BOX. PROVIDE ONE 1.5" CONDUIT TO CABLE TRAY ON THE SAME FLOOR AS SHOWN UNLESS NOTED OTHERWISE. MOUNT AT PROJECT'S STANDARD RECEPTACLE HEIGHT UNLESS NOTED OTHERWISE.
02	6"x6"x4" JUNCTION BOX. PROVIDE ONE 2" CONDUIT TO CABLE TRAY ON THE SAME FLOOR AS SHOWN UNLESS NOTED OTHERWISE. MOUNT AT PROJECT'S STANDARD RECEPTACLE HEIGHT UNLESS NOTED OTHERWISE.
	19" TELECOMMUNICATIONS RACK.
	TELECOMMUNICATIONS GROUND BUS BAR.
	FIRE RETARDANT .75" PLYWOOD BACKBOARD. PAINTED WHITE OR ANOTHER LIGHT COLOR. 4' WIDE X 8' HIGH.
	TELECOMMUNICATIONS BASKET CABLE TRAY, 12" WIDE x 4" DEEP, UNO. MOUNT ABOVE ACCESSIBLE CEILING. COORDINATE LOCATION WITH DUCTWORK, PLUMBING, FIRE PROTECTION, ELECTRICAL, AND LIGHT FIXTURES.
	TELECOMMUNICATIONS LADDER CABLE RUNWAY. SIZE AS INDICATED ON DRAWINGS.

ABBREVIATIONS

AFF	ABOVE FINISHED FLOOR
BFG	BELOW FINISHED GRADE
CR	CARD READER
C	CONDUIT
EA	EACH
EC	ELECTRICAL
ER	EQUIPMENT ROOM
EX	EXISTING
FOC	FIBER OPTIC CABLES
GFCI	GOVERNMENT FURNISHED, INSTALLED
GFGI	GOVERNMENT FURNISHED, GOVERNMENT INSTALLED
IDS	INTRUSION DETECTION SYSTEM
MS	MOTION SENSOR
NMCI	NAVY MARINE CORPS INTRANET
NIPR	NON-SECURE INTERNET PROTOCOL ROUTER
QU	QUANTITY
REQ'D	REQUIRED
RM	ROOM
SIPR	SECURE INTERNET PROTOCOL ROUTER
SHT	SHEET
SM	SINGLE MODE
TR	TELECOMMUNICATION ROOM
TGB	TELECOMMUNICATION GROUNDING BUSBAR
TMH	TELECOMMUNICATION MAINTENANCE HOLE
TMGB	TELECOMMUNICATION MAIN GROUNDING BUSBAR
TBB	TELECOMMUNICATION BONDING BACKBONE
UNO	UNLESS NOTED OTHERWISE

SEPARATION DISTANCES BETWEEN DATA CABLES AND SPECIFIC EMI SOURCES

SOURCE OF DISTURBANCE	MINIMUM SEPARATION DISTANCE
FLUORESCENT LAMPS	6"
NEON LAMPS	6"
MERCURY VAPOUR LAMPS	6"
HIGH-INTENSITY DISCHARGE LAMPS	6"
ARC WELDERS	6"
FREQUENCY INDUCTION HEATING	40"

50' DISTANCE LIMIT RULE

A. IN NO CASE MUST A NON-LISTED OUTSIDE PLANT OR INCOMING SERVICE OUTDOOR RATED CABLE EXCEED 50 FEET FROM THE POINT OF ENTRANCE INTO ANY BUILDING. IF ON-SITE CONDITIONS RESULT IN A CASE WHERE THE CABLE EXCEEDS THE DISTANCE LIMIT THE MUST ADVISE A SOLUTION WITH THE PROJECT CONSULTANT. IN ALL CASES THE SOLUTION WOULD NEED TO INVOLVE EITHER TRANSITIONING FROM OUTDOOR NON-LISTED TO INDOOR LISTED CABLE VIA A SPLICE POINT (E.G. SPLICE CASE OR SPLICE ENCLOSURE FOR FIBER, PROTECTOR BLOCK FOR COPPER ETC.) OR THE ALTERNATIVE MUST BE TO ENCLOSE THE OUTDOOR RATED CABLE WITHIN INTERMEDIATE METAL CONDUIT (IMC) OR RIGID METAL CONDUIT (RMC) THAT IS PROPERLY SEALED AND BONDED TO A GROUNDING ELECTRODE. RETAINING THE OUTDOOR CABLE WITHIN CONDUIT MUST EFFECTIVELY EXTEND THE POINT OF ENTRANCE INTO THE BUILDING.

OSP DETECTION TAPE INCLUSION

A. IN ORDER TO REDUCE THE CHANCE OF ACCIDENTAL DIG-UP OF OUTSIDE PLANT DUCTBANK ELEMENTS IN THE FUTURE, PROVIDE A DETECTABLE WARNING TAPE CONTAINING METALLIC TRACINGS ALONG THE DUCTBANK PATH AT 12" BELOW GRADE MINIMUM. COLOR OF THE DETECTABLE TAPE MUST BE ORANGE OR WHICHEVER COLOR THE COMMON GROUND ALLIANCE (CGA) HAS CURRENTLY DETERMINED FOR TELEVISION AND COMMUNITY ANTENNA TELEVISION (CATV) CABLES.

GENERAL NOTES

ASSOCIATED WITH DIVISION 26

THE RACEWAY SYSTEM FOR TELECOM CABLE MUST FOLLOW THE NEC AND ALL LOCAL CODES GOVERNING THIS PROJECT. ADDITIONAL REQUIREMENTS ARE AS FOLLOWS:

1. A PULL CORD (NYLON, 1/8" MINIMUM) MUST BE INSTALLED WITHIN ALL CONDUITS.
2. CONDUIT MUST RUN IN MOST DIRECT ROUTE POSSIBLE, USUALLY PARALLEL WITH BUILDING LINES.
3. CONDUIT SLEEVES MUST BE RIGID GALVANIZED STEEL FOR PENETRATIONS OF CONCRETE SLABS, CONCRETE WALLS. ALL SLEEVES MUST BE RIGIDLY INSTALLED USING APPROPRIATE FITTINGS AND ALL PENETRATIONS MUST BE GROUTED AROUND THE SLEEVE. SLEEVES MUST PROJECT A MINIMUM OF 4" BEYOND WALL OR FLOOR SURFACE. ALL PENETRATIONS MUST BE FIRESTOPPED.
4. CONDUIT RUN MUST CONTAIN NO CONTINUOUS SECTIONS LONGER THAN 100 FEET. IF RUNS TOTAL MORE THAN 100 FEET, PULL POINTS OR PULL BOXES MUST BE INSERTED.
5. CONDUIT RUNS TO WORK AREAS MUST SERVE NO MORE THAN ONE COMMUNICATION OUTLET. DAISY CHAINING IS NEVER ALLOWED.
6. CONDUIT MUST HAVE NO MORE THAN TWO 90 DEGREES OF BENDS AT ANY POINT OR MORE THAN 180 DEGREES OF CUMULATIVE BENDS BETWEEN PULL POINTS.
7. INSTALL CONDUITS WITH A MINIMUM OF BENDS AND OFFSETS. BENDS MUST NOT KINK OR DESTROY INTERIOR CROSS SECTION OF RACEWAY. FACTORY MADE BENDS MUST BE USED FOR RACEWAY'S 1" TRADE SIZE AND LARGER. BENDS RADIUS MUST BE 6 TIMES INTERNAL DIAMETER FOR CONDUIT SIZES UP TO 2". A CONDUIT GREATER THAN 2" MUST HAVE BEND RADIUS AT LEAST 10 TIMES DIAMETER OF CONDUIT. DO NOT USE PULL BOX IN LIEU OF A BEND RADIUS. BEND RADIUS ON CABLING MUST ALWAYS BE MADE WITHIN THE CONDUIT.
8. DO NOT INSTALL CONDUIT OVER OR ADJACENT TO BOILERS, INCINERATORS, HOT WATER LINES, OR STEAM LINES.
9. REAM ALL CONDUIT ENDS AND FIT THEM WITH AN INSULATED BUSHING TO ELIMINATE SHARP EDGES THAT MAY DAMAGE CABLES.
10. AFTER INSTALLATION, LEAVE CONDUITS CLEAN, DRY AND UNOBSTRUCTED, REAMED AND FITTED WITH BUSHINGS.
11. ELECTRICAL METALLIC TUBING AND RIGID METAL CONDUIT ARE THE ONLY ALLOWED TYPES FOR INTERIOR BUILDING. FLEXIBLE METAL CONDUIT IS NEVER ALLOWED.
12. CONDUIT SYSTEM INSTALLATION:
    - 12.1. CABLE IN EXTERIOR, ABOVE GRADE LOCATIONS: RIGID GALVANIZED STEEL.
    - 12.2. INTERIOR LOCATIONS: EMT.
    - 12.3. CABLE BELOW GRADE: SCHEDULE 40 PVC.
13. ALL METALLIC CONDUITS MUST BE APPROPRIATELY GROUNDED AS SPECIFIED IN THE NEC, ANSI/TIA/EIA J-STD-607-B AND PER MANUFACTURER'S SPECIFICATIONS.
14. CONDUITS ARE TO BE CLEARLY MARKED AT EACH END TO INDICATE THE TRADE (E.G. AV, TELECOM) THAT THE CONDUIT IS INTENDED TO SUPPORT.
15. CABLE PATHWAY MUST NOT EXCEED 295 FEET. THE LENGTH MUST BE MEASURED FROM THE OUTLET IN THE WORK AREA TO PATCH PANEL IN THE RACK.
16. FOR OUTSIDE PLANT CONDUITS ROUTES PROVIDE A SITE LEVEL ACCESSIBLE HANDHOLE EVERY (2) 90 DEGREE BENDS OR 180 DEGREES IN BENDS TOTAL. DISTANCE BETWEEN EACH HANDHOLE MUST NOT EXCEED 600 FEET DISTANCE. DO NOT USE HANDHOLE IN LIEU OF A BEND RADIUS. BEND RADIUS ON CABLING MUST ALWAYS BE MADE WITHIN THE CONDUIT.
17. OUTSIDE PLANT LOCATIONS, ROUTES, AND PULL POINTS ARE INDICATIVE ONLY. TO REVIEW THE PROJECT SITE AND SUBMIT SHOP DRAWING FOR REVIEW BEFORE COMMENCING WORK.

GENERAL PROJECT NOTES

A. ALL MOUNTING HEIGHTS ARE TO THE CENTER LINE OF THE DEVICE BACKBOX UNLESS NOTED OTHERWISE.
B. ALL BOXES AND CONDUITS IN WALLS AND CEILINGS MUST BE FLUSH MOUNTED OR CONCEALED UNLESS NOTED OTHERWISE.
C. ALL EXTERIOR OUTLETS MUST BE WEATHERPROOF.
D. EXACT LOCATION OF ALL TELECOM OUTLETS LOCATED IN FURNITURE AND MILLWORK TO BE VERIFIED WITH ARCHITECT PRIOR TO INSTALLATION.
E. ELECTRICAL OUTLETS MUST BE PROVIDED WITHIN THREE FEET OF COMMUNICATION OUTLETS AT EQUAL HEIGHT.

SEPARATION DISTANCES BETWEEN POWER AND DATA CABLES

CONDITION	MINIMUM SEPARATION DISTANCE		
	< 2kVA	2-5 kVA	> 5kVA
UNSHIELDED POWER LINES OR ELECTRICAL EQUIPMENT IN PROXIMITY TO OPEN OR NONMETAL PATHWAYS.	5"	12"	24"
UNSHIELDED POWER LINES OR ELECTRICAL EQUIPMENT IN PROXIMITY TO A GROUNDED METAL CONDUIT PATHWAY.	2.5"	6"	12"
POWER LINES ENCLOSED IN A GROUNDED METAL CONDUIT (OR EQUIVALENT SHIELDING) IN PROXIMITY TO A GROUNDED METAL CONDUIT PATHWAY.		3"	6"
ELECTRICAL MOTORS AND TRANSFORMERS.			48"

SYM	DESCRIPTION	DATE	APPR

NAVFAC

REGISTERED COMMUNICATIONS DISTRIBUTION DESIGNER
6123128085
Bicsi
Rene Rubio
BICSI ID #112613
EXPIRES 12-31-26
RCDD
SEAL

Jacobs
1100 NORTH GLEBE ROAD
SUITE 500
ARLINGTON, VIRGINIA 22201
571.218.1000
FAX: 571.218.1600

A/E INFO

APPROVED
FOR COMMANDER NAVFAC 8/14/2025
ACTIVITY
APPROVED BY LCDR ELIZABETH OLOKODE NAVFAC NLON FEAD DIRECTOR NEW LONDON, GROTON, CT
SATISFACTORY TO DATE 05/27/2025

DES	RR	DRW	RR	CHK	SA

PM/DM	SMS/CWJ
BRANCH MANAGER	WRB
CHIEF ENG/ARCH	JWJ
FIRE PROTECTION	HPN

DEPARTMENT OF THE NAVY
NAVAL FACILITIES ENGINEERING SYSTEMS COMMAND
MID-ATLANTIC
NAVAL FACILITIES ENGINEERING SYSTEMS COMMAND - MID-ATLANTIC
NAVAL STATION - NORFOLK, VA
NAVAL SUBMARINE BASE NEW LONDON
GROTON, CONNECTICUT
P-1102 WEAPONS MAGAZINE & ORDNANCE OPERATIONS FACILITY
SENTRY
TELECOMMUNICATIONS SYMBOLS, LEGEND, ABBREVIATIONS, AND NOTES

SCALE: AS NOTED
EPROJECT NO.: 1667770
CONSTR. CONTR. NO.
NAVFAC DRAWING NO. 12894144
SHEET 56 OF 65
T-001

6/20/2025 9:14:56 AM T-001
\\uc1vs01\depp\PDZE1628\TELE\BLDG-1667770-T-BIM_SENTRY.rvt

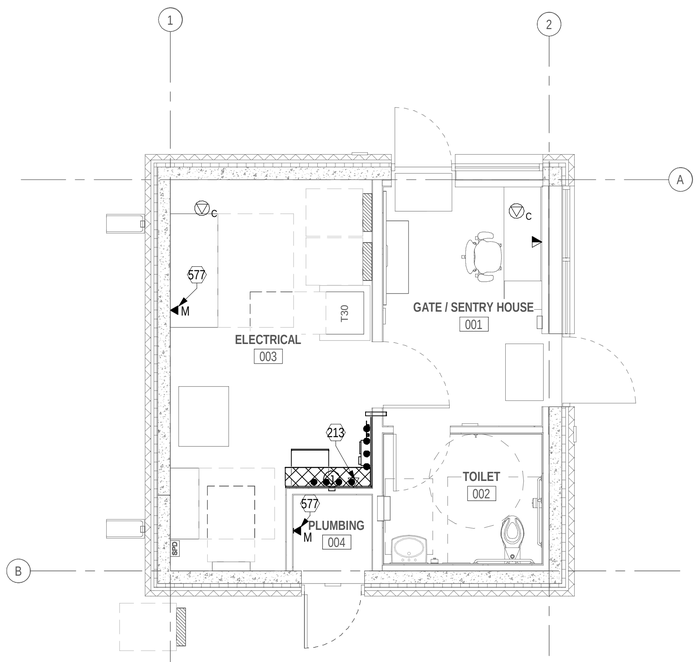

B1 TELECOMMUNICATIONS FLOOR PLAN - SENTRY BUILDING OVERALL

1/4" = 1'-0"

GENERAL SHEET NOTES

A REFER TO SHEET T-001 FOR TELECOM SYMBOLS AND ABBREVIATIONS.

B BOND CABLE TRAY SECTIONS TOGETHER AND GROUND THE SYSTEM TO THE PBB/SBB.

C ALL TELECOMMUNICATIONS RACKS AND/OR CABINTS MUST BE BONDED TO THE PBB/SBB

D ALL TELECOMMUNICATIONS CONDUITS MUST BE BONDED TO THE PBB/SBB OR TO THE NEAREST CABLE TRAY OUTSIDE THE TR.

E PROVIDE INFRASTRUCTURE FOR GOVERNMENT FURNISHED GOVERNMENT INSTALLED SECUIRITY INTRUSION DETECTION SYSTEM AND ACCESS CONTROL SYSTEM. PROVIDE JUNCTION BOXES AND CONDUIT WITH PULL STRINGS.

F MAIN TAIN SEPARATION BETWEEN ALL CLASSIFIED AND UNCLASSIFED CABLING IN ACCORDANCE WITH CNSSAM TEPMEST/1-13.

SHEET KEYNOTES

213 PROVIDE CATEGORY 6 WALL MOUNTED DATA OUTLETS FOR ESS EQUIPMENT. COORDINATE ROUGH IN HEIGHT WITH ESS PROVIDER.

577 PROVIDE DEDICATED 1 INCH CONDUIT FROM TELECOM RACK FOR CATEGORY 6 METERING CONNECTION. COORDINATE FINAL PLACEMENT WITH EQUIPMENT PRIOR TO ROUGH IN. INCLUDE PATCH CORDS AS NEEDED.

SYM	DESCRIPTION	DATE	APPR

NAVFAC

REGISTERED COMMUNICATIONS DISTRIBUTION DESIGNER
6/23/2025
Bicsi
Rene Rubio
BICSI ID #112613
EXPIRES 12-31-26
RCDD
SEAL

Jacobs
1100 NORTH GLEBE ROAD
SUITE 500
ARLINGTON, VIRGINIA 22201
571.218.1000
FAX: 571.218.1600
A/E INFO

APPROVED
FOR COMMANDER NAVFAC 8/14/2025

ACTIVITY
APPROVED BY LCDR ELIZABETH
OLOKODE NAVFAC NLON FEAD
DIRECTOR NEW LONDON, GROTON, CT

SATISFACTORY TO DATE	05/27/2025
DES RR DRW RR CHK SA	
PM/DM	SMS/CWJ
BRANCH MANAGER	WRB
CHIEF ENG/ARCH	JWJ
FIRE PROTECTION	HPN

DEPARTMENT OF THE NAVY
NAVAL FACILITIES ENGINEERING SYSTEMS COMMAND - MID-ATLANTIC
NAVAL FACILITIES ENGINEERING SYSTEMS COMMAND
MID-ATLANTIC
NAVAL STATION - NORFOLK, VA
NAVAL SUBMARINE BASE NEW LONDON
GROTON, CONNECTICUT
P-1102 WEAPONS MAGAZINE & ORDNANCE OPERATIONS FACILITY
SENTRY
TELECOMMUNICATIONS FLOOR PLAN

SCALE:	AS NOTED
EPROJECT NO.:	1667770
CONSTR. CONTR. NO.	
NAVFAC DRAWING NO.	12894145
SHEET 57 OF 65	

T-101

0 2' 4' 8' 12'
1/4" = 1'-0"

PLAN NORTH

T-101
6/20/2025 9:14:50 AM
\\dcl.ev5\bim\bdp\PZDZE1628\TELE\BLDG-1667770-T-BIM_SENTRY.rvt

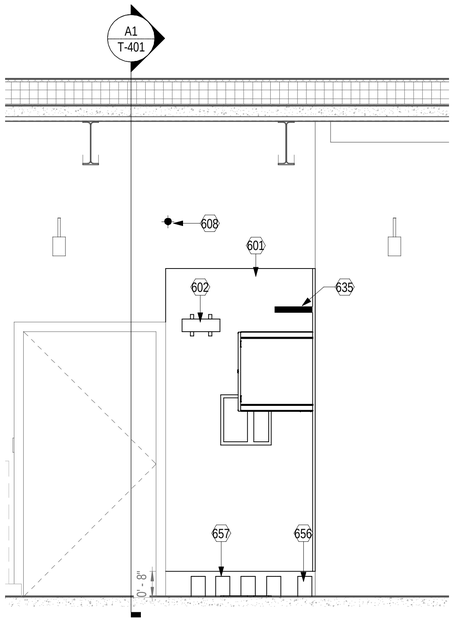

C1 TELECOMM ELEVATION - SOUTH WALL
1/2" = 1'-0"

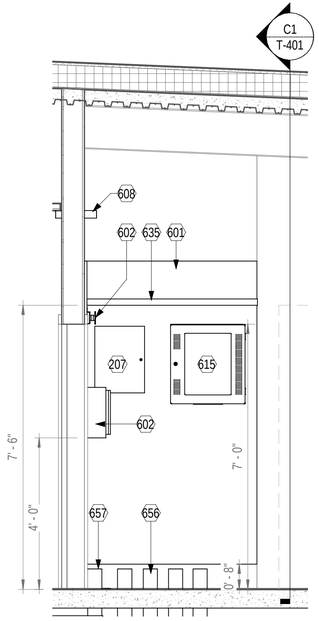

A1 TELECOM ELEVATION - EAST WALL
1/2" = 1'-0"

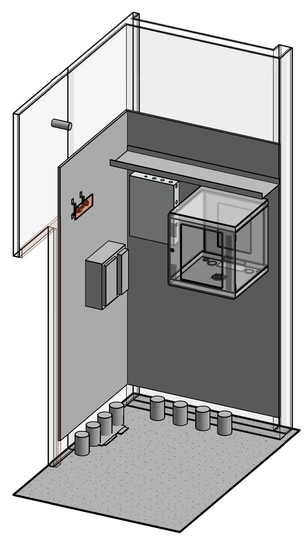

A3 TELECOM ISO VIEW

GENERAL SHEET NOTES

SHEET KEYNOTES

207 WALL SPACE ALLOCATED FOR ACCESS CONTROL PANELS. PROVIDE DEDICATED 110VAC POWER FOR HARDWIRED CIRCUIT MOUNTED AT 72" AFF

601 PROVIDE AC GRADE FIRE TREATED 3/4" PLYWOOD ON WALLS AS SHOWN MOUNTED VERTICALLY 8" AFF . PAINT PLYWOOD WITH 2 EVEN COATS OF FIRE RETARDANT PAINT ON ALL SIDES. ATTACH USING AN ANCHORING SYSTEM SUITABLE FOR THE WALL TYPE (TYPICAL)

602 GROUND AND BOND EQUIPMENT RACKS AND LADDER PATHWAY TO PBB/SBB. INSTALL GROUND BAR AT HEIGHT INDICATED.

608 PROVIDE FOUR INCH FIRE RATED SLEEVE SYSTEM FOR COMMUNICATIONS CABLING CAPABLE OF 100 PERCENT FILL.(TYPICAL)

615 PROVIDE 24 RU LOCKABLE WALL MOUNTED NETWORK EQUIPMENT CABINET (MIN 30" D). INSTALL AT HEIGHT INDICATED ON PLANS.

635 PROVIDE 2"D X 12"W WELDED BASKET TRAY WITH FITTINGS. MOUNT PATHWAY AT HEIGHT INDICATED.

656 INDICATES (4) FOUR, FOUR-INCH OSP CONDUITS FROM TMH06B.

657 INDICATES (4) FOUR, FOUR-INCH OSP CONDUITS FROM TMH06C.

0 1' 2' 4' 6'
1/2" = 1'-0"

SYM	DESCRIPTION	DATE	APPR

NAVFAC

REGISTERED COMMUNICATIONS DISTRIBUTION DESIGNER
6123180085
Bicsi
Rene Rubio
BICSI ID #112613
EXPIRES 12-31-26
RCDD
SEAL

Jacobs
1100 NORTH GLEBE ROAD
SUITE 500
ARLINGTON, VIRGINIA 22201
571.218.1000
FAX: 571.218.1600

A/E INFO

APPROVED
FOR COMMANDER NAVFAC 8/14/2025

ACTIVITY:
APPROVED BY LCDR ELIZABETH OLOKODE NAVFAC NLON FEAD DIRECTOR NEW LONDON, GROTON, CT

SATISFACTORY TO DATE	05/27/2025		
DES RR	DRW RR	CHK SA	
PM/DM	SMS/CWJ		
BRANCH MANAGER	WRB		
CHIEF ENG/ARCH	JWJ		
FIRE PROTECTION	HPN		

DEPARTMENT OF THE NAVY
NAVAL FACILITIES ENGINEERING SYSTEMS COMMAND - MID-ATLANTIC
NAVAL FACILITIES ENGINEERING SYSTEMS COMMAND
MID-ATLANTIC
NAVAL STATION - NORFOLK, VA
NAVAL SUBMARINE BASE NEW LONDON
GROTON, CONNECTICUT
P-1102 WEAPONS MAGAZINE & ORDNANCE OPERATIONS FACILITY
SENTRY
TELECOMMUNICATIONS ENLARGED PLANS

SCALE: AS NOTED
EPROJECT NO.: 1667770
CONSTR. CONTR. NO.
NAVFAC DRAWING NO.
12894146
SHEET 58 OF 65
T-401

6/20/2025 9:15:01 AM
T-401
\\dc1vs01\bim\P2DZE\6280\TELE\BLDG-1667770-T-BIM_SENTRY.rvt

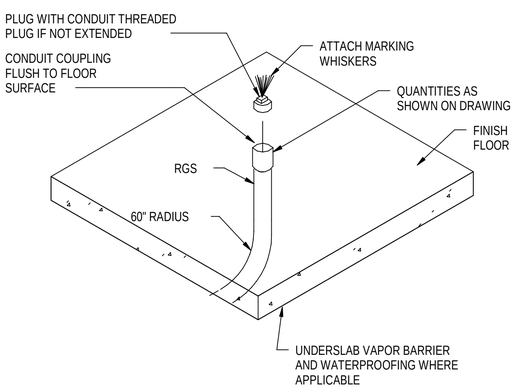

A1 4" UNDERGROUND CONDUIT STUB-UP

NTS

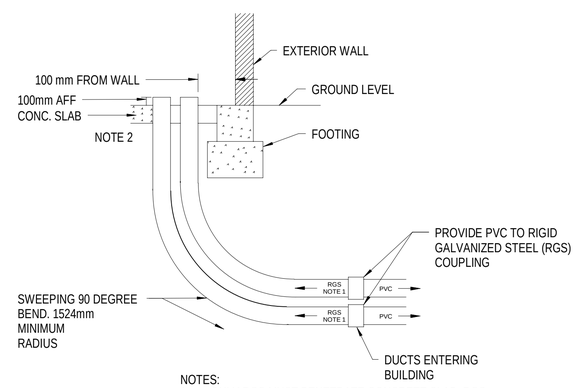

NOTES:

1. ONLY RGS MUST PENETRATE CONCRETE SLAB. RGS MUST BE FACTORY COATED WITH PVC OR BE WRAPPED WITH A MINIMUM OF TWO LAYERS OF WATERPROOF PIPE TAPE.
2. SEAL AROUND CONDUITS AT PENETRATION THROUGH VAPOR BARRIER (NOT SHOWN)
3. ACTUAL CONDUIT CONFIGURATION IN EACH BUILDING WILL SPLAY INTO SINGLE ROW.

A3 CONDUIT FACILITY PENETRATION.

NTS

SYM	DESCRIPTION	DATE	APPR

NAVFAC

REGISTERED COMMUNICATIONS DISTRIBUTION DESIGNER
6/23/2025
Bicsi
Rene Rubio
BICSI ID #112613
EXPIRES 12-31-26
RCDD
SEAL

Jacobs
1100 NORTH GLEBE ROAD
SUITE 500
ARLINGTON, VIRGINIA 22201
571.218.1000
FAX: 571.218.1600

A/E INFO

APPROVED

FOR COMMANDER NAVFAC 8/14/2025

ACTIVITY
APPROVED BY LCDR ELIZABETH
OLOKODE NAVFAC NLON FEAD
DIRECTOR NEW LONDON, GROTON, CT

SATISFACTORY TO DATE 05/27/2025

DES	RR	DRW	RR	CHK	SA

PM/DM	SMS/CWJ
BRANCH MANAGER	WRB
CHIEF ENG/ARCH	JWJ
FIRE PROTECTION	HPN

DEPARTMENT OF THE NAVY
NAVAL FACILITIES ENGINEERING SYSTEMS COMMAND
MID-ATLANTIC
NAVAL FACILITIES ENGINEERING SYSTEMS COMMAND - MID-ATLANTIC
NAVAL STATION - NORFOLK, VA
NAVAL SUBMARINE BASE NEW LONDON
GROTON, CONNECTICUT
P-1102 WEAPONS MAGAZINE & ORDNANCE OPERATIONS FACILITY
SENTRY
TELECOMMUNICATIONS DETAILS

SCALE: AS NOTED

EPROJECT NO.: 1667770

CONSTR. CONTR. NO.

NAVFAC DRAWING NO.
12894147

SHEET 59 OF 65

T-501

6/20/2025 9:15:04 AM T-501
\\bc1vs01\depp\PDZE1629\TELE\BLDG-1667770-T-BIM_SENTRY.rvt

* UN-NUMBERED CUBICLE: WHEN A CUBICAL AREA IS FOUND UNNUMBERED, IT MUST BE NUMBERED CLOCK-WISE FROM NORTH. THE ASSIGNED NUMBERS WILL BE NOTED ON THE RED LINED FLOOR PLAN.

* IF WIRING CLOSET ROOM NUMBER IS NOT AVAILABLE, LABEL WIRING CLOSETS, M01 FOR MAIN 01, S01 FOR SUB-CLOSET 01, AND CLOCK-WISE FROM NORTH.

* IF ROOM NUMBERS ARE UNAVAILABLE, START NUMBERING ROOMS NORTH TO SOUTH, WEST TO EAST.

* DROP NUMBERS ARE IN SEQUENCE BY WIRING CLOSET.

*PATCH PANELS ARE IDENTIFIED BY A NUMBER FOLLOWED BY F FOR FRONT AND B FOR BACK AS NECESSARY

* NUMBERS NEXT TO JACKS ARE ALWAYS D1, D2, S1, S2, AND V2, AS THEY ARE PART OF THE CABLE ID CONVENTION AND NOT A PATCH PANEL NUMBER. D IS FOR DATA AND V FOR VOICE OVER IP.

NOTE: THIS NGEN WALL PLATE NAMING SCHEME SUPERCEDES ALL EXISTING LABELING SCHEMES IN PLACE.

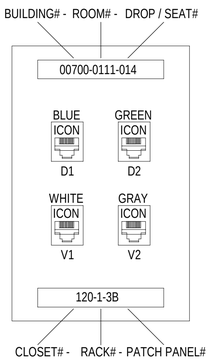

UNCLASSIFIED

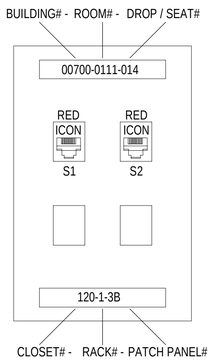

CLASSIFIED

C1 WALL PLATE
NTS

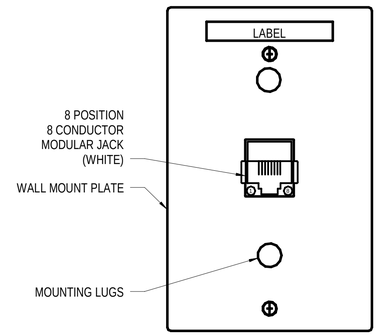

C3 WALL MOUNT PHONE FACEPLATE
NTS

568A PIN CONFIGURATION

PIN	WIRE COLOR
1	WHITE/ORANGE
2	ORNGE
3	WHITE/GREEN
4	BLUE
5	WHITE/BLUE
6	GREEN
7	WHITE/BROWN
8	BROWN

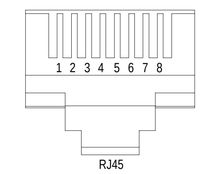

C4 568B PIN OUT CONFIGURATION
NTS

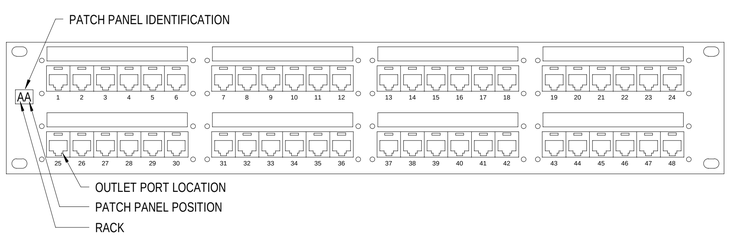

A1 PATCH PANEL LABELING DETAIL
NTS

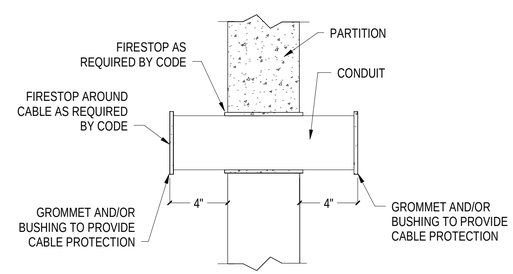

A3 TYPICAL SLEEVE IN RATED WALL
NTS

SYM	DESCRIPTION	DATE	APPR

NAVFAC

REGISTERED COMMUNICATIONS DISTRIBUTION DESIGNER 6/23/2025 Bicsi Rene Rubio BICSI ID #112613 EXPIRES 12-31-26 RCDD SEAL

Jacobs
1100 NORTH GLEBE ROAD
SUITE 500
ARLINGTON, VIRGINIA 22201
571.218.1000
FAX: 571.218.1600
A/E INFO

APPROVED
FOR COMMANDER NAVFAC 8/14/2025
ACTIVITY
APPROVED BY LCDR ELIZABETH OLOKODE NAVFAC NLON FEAD DIRECTOR NEW LONDON, GROTON, CT
SATISFACTORY TO DATE 05/27/2025

DES	RR	DRW RR	CHK SA
PM/DM	SMS/CWJ		
BRANCH MANAGER	WRB		
CHIEF ENG/ARCH	JWJ		
FIRE PROTECTION	HPN		

DEPARTMENT OF THE NAVY
NAVAL FACILITIES ENGINEERING SYSTEMS COMMAND - MID-ATLANTIC
NAVAL FACILITIES ENGINEERING SYSTEMS COMMAND
MID-ATLANTIC
NAVAL STATION - NORFOLK, VA
NAVAL SUBMARINE BASE NEW LONDON
GROTON, CONNECTICUT
P-1102 WEAPONS MAGAZINE & ORDNANCE OPERATIONS FACILITY
SENTRY
TELECOMMUNICATIONS DETAILS

SCALE: AS NOTED
EPROJECT NO.: 1667770
CONSTR. CONTR. NO.
NAVFAC DRAWING NO. 12894148
SHEET 60 OF 65
T-502

6/20/2025 9:15:05 AM
T-502
\\dc1-vs01ldsdp\PDZE1628\TELE\BLDG-1667770-T-BIM_SENTRY.rvt

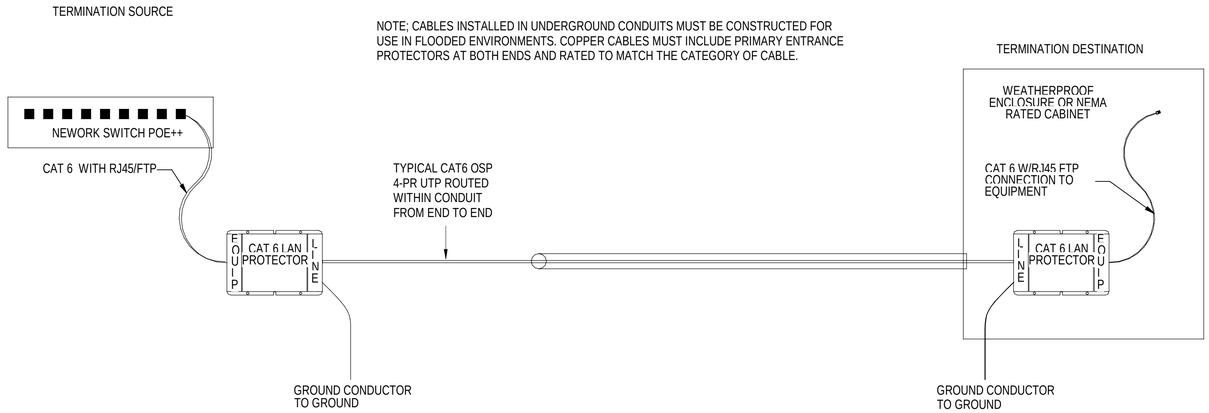

C1 OSP COPPER CHANNEL LINK - PROTECTED - OSP CAMERAS

NTS

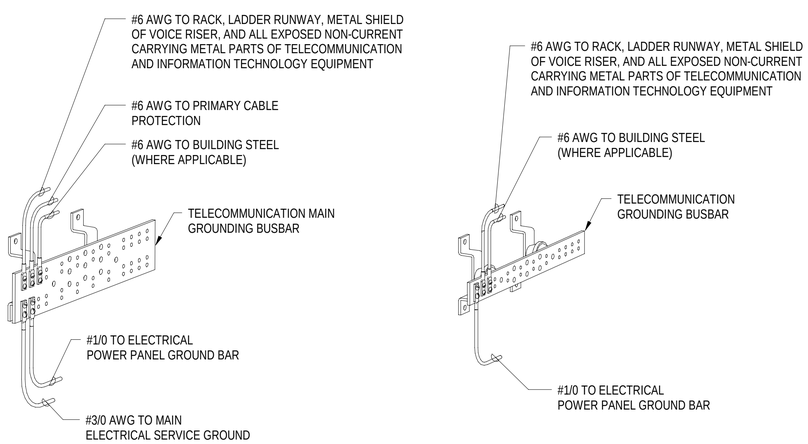

A1 TELECOMMUNICATION GROUNDING

NTS

SYM	DESCRIPTION	DATE	APPR

NAVFAC

REGISTERED COMMUNICATIONS DISTRIBUTION DESIGNER
6/23/2025
Bicsi
Rene Rubio
BICSI ID #112613
EXPIRES 12-31-26
RCDD
SEAL

Jacobs
1100 NORTH GLEBE ROAD
SUITE 500
ARLINGTON, VIRGINIA 22201
571.218.1000
FAX: 571.218.1600

A/E INFO

APPROVED

FOR COMMANDER NAVFAC 8/14/2025

ACTIVITY
APPROVED BY LCDR ELIZABETH OLOKODE NAVFAC NLON FEAD DIRECTOR NEW LONDON, GROTON, CT

SATISFACTORY TO DATE 05/27/2025

DES	RR	DRW	RR	CHK	SA

PM/DM	SMS/CWJ
BRANCH MANAGER	WRB
CHIEF ENG/ARCH	JWJ
FIRE PROTECTION	HPN

DEPARTMENT OF THE NAVY
NAVAL FACILITIES ENGINEERING SYSTEMS COMMAND
MID-ATLANTIC
NAVAL FACILITIES ENGINEERING SYSTEMS COMMAND - MID-ATLANTIC
NAVAL STATION - NORFOLK, VA
NAVAL SUBMARINE BASE NEW LONDON
GROTON, CONNECTICUT
P-1102 WEAPONS MAGAZINE & ORDNANCE OPERATIONS FACILITY
SENTRY
TELECOMMUNICATIONS DETAILS

SCALE: AS NOTED
EPROJECT NO.: 1667770
CONSTR. CONTR. NO.
NAVFAC DRAWING NO. 12894149
SHEET 61 OF 65
T-503

6/20/2025 9:15:07 AM T-503
\\bc1vs01\depj\PDZE16238\TELE\BLDG-1667770-T-BIM_SENTRY.rvt

SECURITY

CR	CARD READER/KEYPAD COMBO
DA	DURESS ALARM
DC	ACS DOOR POSITION SENSOR
BMS	IDS HIGH SECURITY BALANCED MAGNETIC SWITCH
PCU	IDS PREMISE CONTROL UNIT
●	SYSTEMS PUSH BUTTON
ACP	ACCESS CONTROL PANEL
MD	IDS MOTION DETECTOR MOUNTED TO CEILING
EL	24VDC ELECTRIC LOCK SET W/ INTERNAL REQUEST-TO-EXIT (PROVIDED BY DIV. 08)
NS	NETWORK SWITCH
P	120VAC POWER CONNECTION (PROVIDED BY DIV. 26)
▽	DATA CONNECTION (PROVIDED BY DIV. 27)
▭	8MP FIXED LENS CCTV CAMERA
PNO	20MP MULTI-SENSOR PANORAMIC CCTV CAMERA
DIB	DOOR INTERFACE BOX
J	6" X 6" X 4" HINGED COVER KEY LOCKABLE ENCLOSURE
J1	10" X 10" X 4" HINGED COVER KEY LOCKABLE ENCLOSURE
J2	12" X 12" X 6" HINGED COVER KEY LOCKABLE ENCLOSURE
KP	IDS CONTROL KEYPAD
M	IDS MOTION DETECTOR PENDANT MOUNTED TO STRUCTURE
MW	IDS MOTION DETECTOR WALL MOUNTED
IT	INFORMATION TECHNOLOGY (IT) CABINET (BY DIV 27)

ABBREVIATIONS

ACS	ELECTRONIC ACCESS CONTROL SYSTEM
AFF	ABOVE FINISHED FLOOR
BFG	BELOW FINISHED GRADE
CR	CARD READER
C	CONDUIT
EA	EACH
EC	ELECTRICAL
ER	EQUIPMENT ROOM
EX	EXISTING
FOC	FIBER OPTIC CABLES
GFCI	GOVERNMENT FURNISHED, INSTALLED
GFGI	GOVERNMENT FURNISHED, GOVERNMENT INSTALLED
IDS	INTRUSION DETECTION SYSTEM
MS	MOTION SENSOR
NMCI	NAVY MARINE CORPS INTRANET
NIPR	NON-SECURE INTERNET PROTOCOL ROUTER
QU	QUANTITY
REQ'D	REQUIRED
RM	ROOM
SIPR	SECURE INTERNET PROTOCOL ROUTER
SHT	SHEET
SM	SINGLE MODE
TR	TELECOMMUNICATION ROOM
TGB	TELECOMMUNICATION GROUNDING BUSBAR
TMH	TELECOMMUNICATION MAINTENANCE HOLE
TMGB	TELECOMMUNICATION MAIN GROUNDING BUSBAR
TBB	TELECOMMUNICATION BONDING BACKBONE
UNO	UNLESS NOTED OTHERWISE

SEPARATION DISTANCES BETWEEN DATA CABLES AND SPECIFIC EMI SOURCES

SOURCE OF DISTURBANCE	MINIMUM SEPARATION DISTANCE
FLUORESCENT LAMPS	6"
NEON LAMPS	6"
MERCURY VAPOUR LAMPS	6"
HIGH-INTENSITY DISCHARGE LAMPS	6"
ARC WELDERS	6"
FREQUENCY INDUCTION HEATING	40"

50' DISTANCE LIMIT RULE

A. IN NO CASE MUST A NON-LISTED OUTSIDE PLANT OR INCOMING SERVICE OUTDOOR RATED CABLE EXCEED 50 FEET FROM THE POINT OF ENTRANCE INTO ANY BUILDING. IF ON-SITE CONDITIONS RESULT IN A CASE WHERE THE CABLE EXCEEDS THE DISTANCE LIMIT THE MUST ADVISE A SOLUTION WITH THE PROJECT CONSULTANT. IN ALL CASES THE SOLUTION WOULD NEED TO INVOLVE EITHER TRANSITIONING FROM OUTDOOR NON-LISTED TO INDOOR LISTED CABLE VIA A SPLICE POINT (E.G. SPLICE CASE OR SPLICE ENCLOSURE FOR FIBER, PROTECTOR BLOCK FOR COPPER ETC.) OR THE ALTERNATIVE MUST BE TO ENCLOSE THE OUTDOOR RATED CABLE WITHIN INTERMEDIATE METAL CONDUIT (IMC) OR RIGID METAL CONDUIT (RMC) THAT IS PROPERLY SEALED AND BONDED TO A GROUNDING ELECTRODE. RETAINING THE OUTDOOR CABLE WITHIN CONDUIT MUST EFFECTIVELY EXTEND THE POINT OF ENTRANCE INTO THE BUILDING.

OSP DETECTION TAPE INCLUSION

A. IN ORDER TO REDUCE THE CHANCE OF ACCIDENTAL DIG-UP OF OUTSIDE PLANT DUCTBANK ELEMENTS IN THE FUTURE, PROVIDE A DETECTABLE WARNING TAPE CONTAINING METALLIC TRACINGS ALONG THE DUCTBANK PATH AT 12" BELOW GRADE MINIMUM. COLOR OF THE DETECTABLE TAPE MUST BE ORANGE OR WHICHEVER COLOR THE COMMON GROUND ALLIANCE (CGA) HAS CURRENTLY DETERMINED FOR TELEVISION AND COMMUNITY ANTENNA TELEVISION (CATV) CABLES.

CONDUIT INSTALLATION NOTES
ASSOCIATED WITH DIVISION 26

THE RACEWAY SYSTEM FOR TELECOM CABLE MUST FOLLOW THE NEC AND ALL LOCAL CODES GOVERNING THIS PROJECT. ADDITIONAL REQUIREMENTS ARE AS FOLLOWS:

1. A PULL CORD (NYLON, 1/8" MINIMUM) MUST BE INSTALLED WITHIN ALL CONDUITS.
2. CONDUIT MUST RUN IN MOST DIRECT ROUTE POSSIBLE, USUALLY PARALLEL WITH BUILDING LINES.
3. CONDUIT SLEEVES MUST BE RIGID GALVANIZED STEEL FOR PENETRATIONS OF CONCRETE SLABS, CONCRETE WALLS. ALL SLEEVES MUST BE RIGIDLY INSTALLED USING APPROPRIATE FITTINGS AND ALL PENETRATIONS MUST BE GROUTED AROUND THE SLEEVE. SLEEVES MUST PROJECT A MINIMUM OF 4" BEYOND WALL OR FLOOR SURFACE. ALL PENETRATIONS MUST BE FIRESTOPPED.
4. CONDUIT RUN MUST CONTAIN NO CONTINUOUS SECTIONS LONGER THAN 100 FEET. IF RUNS TOTAL MORE THAN 100 FEET, PULL POINTS OR PULL BOXES MUST BE INSERTED.
5. CONDUIT RUNS TO WORK AREAS MUST SERVE NO MORE THAN ONE COMMUNICATION OUTLET. DAISY CHAINING IS NEVER ALLOWED.
6. CONDUIT MUST HAVE NO MORE THAN TWO 90 DEGREES OF BENDS AT ANY POINT OR MORE THAN 180 DEGREES OF CUMULATIVE BENDS BETWEEN PULL POINTS.
7. INSTALL CONDUITS WITH A MINIMUM OF BENDS AND OFFSETS. BENDS MUST NOT KINK OR DESTROY INTERIOR CROSS SECTION OF RACEWAY. FACTORY MADE BENDS MUST BE USED FOR RACEWAY'S 1" TRADE SIZE AND LARGER. BENDS RADIUS MUST BE 6 TIMES INTERNAL DIAMETER FOR CONDUIT SIZES UP TO 2". A CONDUIT GREATER THAN 2" MUST HAVE BEND RADIUS AT LEAST 10 TIMES DIAMETER OF CONDUIT. DO NOT USE PULL BOX IN LIEU OF A BEND RADIUS. BEND RADIUS ON CABLING MUST ALWAYS BE MADE WITHIN THE CONDUIT.
8. DO NOT INSTALL CONDUIT OVER OR ADJACENT TO BOILERS, INCINERATORS, HOT WATER LINES, OR STEAM LINES.
9. REAM ALL CONDUIT ENDS AND FIT THEM WITH AN INSULATED BUSHING TO ELIMINATE SHARP EDGES THAT MAY DAMAGE CABLES.
10. AFTER INSTALLATION, LEAVE CONDUITS CLEAN, DRY AND UNOBSTRUCTED, REAMED AND FITTED WITH BUSHINGS.
11. ELECTRICAL METALLIC TUBING AND RIGID METAL CONDUIT ARE THE ONLY ALLOWED TYPES FOR INTERIOR BUILDING. FLEXIBLE METAL CONDUIT IS NEVER ALLOWED.
12. CONDUIT SYSTEM INSTALLATION:
    - 12.1. CABLE IN EXTERIOR, ABOVE GRADE LOCATIONS: RIGID GALVANIZED STEEL.
    - 12.2. INTERIOR LOCATIONS: EMT.
    - 12.3. CABLE BELOW GRADE: SCHEDULE 40 PVC.
13. ALL METALLIC CONDUITS MUST BE APPROPRIATELY GROUNDED AS SPECIFIED IN THE NEC, ANSI/TIA/EIA J-STD-607-B AND PER MANUFACTURER'S SPECIFICATIONS.
14. CONDUITS ARE TO BE CLEARLY MARKED AT EACH END TO INDICATE THE TRADE (E.G. AV, TELECOM) THAT THE CONDUIT IS INTENDED TO SUPPORT.
15. CABLE PATHWAY MUST NOT EXCEED 295 FEET. THE LENGTH MUST BE MEASURED FROM THE OUTLET IN THE WORK AREA TO PATCH PANEL IN THE RACK.
16. FOR OUTSIDE PLANT CONDUITS ROUTES PROVIDE A SITE LEVEL ACCESSIBLE HANDHOLE EVERY (2) 90 DEGREE BENDS OR 180 DEGREES IN BENDS TOTAL. DISTANCE BETWEEN EACH HANDHOLE MUST NOT EXCEED 600 FEET DISTANCE. DO NOT USE HANDHOLE IN LIEU OF A BEND RADIUS. BEND RADIUS ON CABLING MUST ALWAYS BE MADE WITHIN THE CONDUIT.
17. OUTSIDE PLANT LOCATIONS, ROUTES, AND PULL POINTS ARE INDICATIVE ONLY. TO REVIEW THE PROJECT SITE AND SUBMIT SHOP DRAWING FOR REVIEW BEFORE COMMENCING WORK.

GENERAL PROJECT NOTES

A. ALL MOUNTING HEIGHTS ARE TO THE CENTER LINE OF THE DEVICE BACKBOX UNLESS NOTED OTHERWISE.
B. ALL BOXES AND CONDUITS IN WALLS AND CEILINGS MUST BE FLUSH MOUNTED OR CONCEALED UNLESS NOTED OTHERWISE.
C. ALL EXTERIOR OUTLETS MUST BE WEATHERPROOF.
D. EXACT LOCATION OF ALL TELECOM OUTLETS LOCATED IN FURNITURE AND MILLWORK TO BE VERIFIED WITH ARCHITECT PRIOR TO INSTALLATION.
E. ELECTRICAL OUTLETS MUST BE PROVIDED WITHIN THREE FEET OF COMMUNICATION OUTLETS AT EQUAL HEIGHT.

SEPARATION DISTANCES BETWEEN POWER AND DATA CABLES

CONDITION	MINIMUM SEPARATION DISTANCE		
	< 2kVA	2-5 kVA	> 5kVA
UNSHIELDED POWER LINES OR ELECTRICAL EQUIPMENT IN PROXIMITY TO OPEN OR NONMETAL PATHWAYS.	5"	12"	24"
UNSHIELDED POWER LINES OR ELECTRICAL EQUIPMENT IN PROXIMITY TO A GROUNDED METAL CONDUIT PATHWAY.	2.5"	6"	12"
POWER LINES ENCLOSED IN A GROUNDED METAL CONDUIT (OR EQUIVALENT SHIELDING) IN PROXIMITY TO A GROUNDED METAL CONDUIT PATHWAY.		3"	6"
ELECTRICAL MOTORS AND TRANSFORMERS.			48"

CABLE SCHEDULE

CABLE TYPE	DESCRIPTION	USE
A1	COMPOSITE OSDP: 2PR, 24AWG OAS, 4C 22AWG, 4C 18AWG CMP	DOOR INTERFACE BOX OSDP
A2	COMPOSITE WEIGAND: 3PR 18AWG, 4C 16AWG, 6C 18AWG CMP	DOOR INTERFACE BOX WEIGAND
B	2PR 24AWG	RS-485
C1	1 PR 22AWG, SHLD + 2C 16AWG PWR	CARD READER OSDP
C2	6C 22AWG, SHLD	CARD READER WIEGAND
D	2C 18AWG CMP	DPS
E	6C 22AWG CMP	HSS/BMS
F	4C 18AWG CMP	REQUEST-TO-EXIT
G	4C 18AWG CMP	24VDC LOCK POWER
H	2C 20AWG CMP	TAMPER
J	4C 20AWG, SHLD	ALARM SENSOR
K	3PR 18AWG, SHLD	ALARM SENSOR
L	2C 16AWG SHLD	LOW VOLTAGE POWER
M	CATEGORY 6 UTP	VIDEO SURVEILLANCE

* OR EQUIVALENT

SECURITY HARDWARE SCHEDULE

Description	Description	DETAIL REFERENCE
RM 001 GATE/SENTRY	CARD READER (CR)	TY501 / C3
EXTERIOR	FIXED CAMERA	TY501 / C1
EXTERIOR	FIXED CAMERA	TY501 / C1
RM 001 GATE/SENTRY	DOOR CONTACT (DC)	TY501 / A1
RM 001 GATE/SENTRY	CARD READER (CR)	TY501 / C3
RM 001 GATE/SENTRY	ELECTRONIC LOCK (EL)	TY501 / A4
RM 001 GATE/SENTRY	DOOR INTERFACE BOX (DIB)	TY501 / A1
RM 001 GATE/SENTRY	DOOR INTERFACE BOX (DIB)	TY501 / A1
RM 001 GATE/SENTRY	ELECTRONIC LOCK (EL)	TY501 / A4
RM 003 ELECTRICAL	NETWORK SWITCH (NS)	TY501 / A1
RM 003 ELECTRICAL	ACCESS CONTROL PANEL (ACP)	TY501 / A1

SYM	DESCRIPTION	DATE	APPR

NAVFAC

REGISTERED COMMUNICATIONS DISTRIBUTION DESIGNER
6/23/2025
Bicsi
Rene Rubio
BICSI ID #112613
EXPIRES 12-31-26
RCDD
SEAL

Jacobs
1100 NORTH GLEBE ROAD
SUITE 500
ARLINGTON, VIRGINIA 22201
571.218.1000
FAX: 571.218.1600
A/E INFO

APPROVED
FOR COMMANDER NAVFAC
ACTIVITY
APPROVED BY LCDR ELIZABETH OLOKODE NAVFAC NLON FEAD DIRECTOR NEW LONDON, GROTON, CT
SATISFACTORY TO DATE 05/27/2025

DES MG	DRW LA	CHK SA	
PM/DM	SMS/CWJ		
BRANCH MANAGER	WRB		
CHIEF ENG/ARCH	JWJ		
FIRE PROTECTION	HPN		

DEPARTMENT OF THE NAVY
NAVAL FACILITIES ENGINEERING SYSTEMS COMMAND
MID-ATLANTIC
NAVAL FACILITIES ENGINEERING SYSTEMS COMMAND - MID-ATLANTIC
NAVAL STATION - NORFOLK, VA
NAVAL SUBMARINE BASE NEW LONDON
GROTON, CONNECTICUT
P-1102 WEAPONS MAGAZINE & ORDNANCE OPERATIONS FACILITY
SENTRY
SECURITY SYMBOLS, LEGEND, ABBREVIATIONS, AND NOTES

SCALE: AS NOTED
EPROJECT NO.: 1667770
CONSTR. CONTR. NO.
NAVFAC DRAWING NO. 12894325
SHEET 62 OF 65
TY001

6/20/2025 9:11:51 AM TY001
\\bk1-vs01\dept\PDZE16293\TE\ELE\BLDG-1667770-T-BIM_SENTRY.rvt

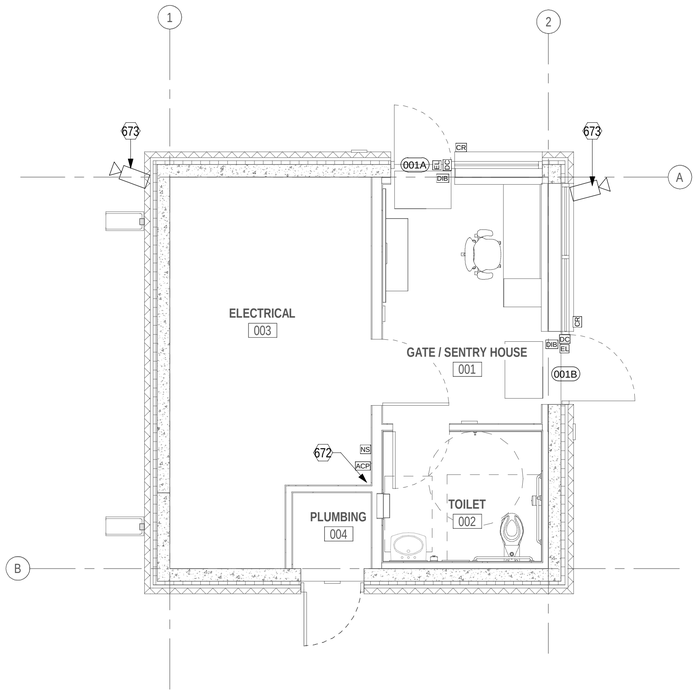

B1 SECURITY FLOOR PLAN - OVERALL SENTRY BUILDING
1/4" = 1'-0"

GENERAL SHEET NOTES

1. REFER TO SHEET TY001 FOR SECURITY SYMBOLS AND ABBREVIATIONS.
2. PROVIDE SEPERATE AND INDEPENDANT PATHWAYS FOR SECURITY CABLING.

SHEET KEYNOTES

672 WALL SPACE ALLOCATED FOR TELECOMMUNICATIONS AND SECURITY WIRING, TERMINATIONS AND EQUIPMENT. REFERENCE T-401 FOR ADDITIONAL INFORMATION.

673 PROVIDE NEW CCTV CAMERAS AND MOUNT FROM GUARD BOOTH TO SENTRY BUILDING B AND MOUNT AT 9-0 FT AFF. COORDINATE VIEW AND ANGLE WITH OWNER.

0 2' 4' 8' 12'
1/4" = 1'-0"

PLAN NORTH

SYM	DESCRIPTION	DATE	APPR

NAVFAC

REGISTERED COMMUNICATIONS DISTRIBUTION DESIGNER
61231B085
Bicsi
Rene Rubio
BICSI ID #112613
EXPIRES 12-31-26
RCDD
SEAL

Jacobs
1100 NORTH GLEBE ROAD
SUITE 500
ARLINGTON, VIRGINIA 22201
571.218.1000
FAX: 571.218.1600

A/E INFO

APPROVED
FOR COMMANDER NAVFAC 8/11/2025

ACTIVITY
APPROVED BY LCDR ELIZABETH OLOKODE NAVFAC NLON FEAD DIRECTOR NEW LONDON, GROTON, CT

SATISFACTORY TO DATE	05/27/2025
DES MG	DRW LA / CHK RR
PM/DM	SMS/CWJ
BRANCH MANAGER	WRB
CHIEF ENG/ARCH	JWJ
FIRE PROTECTION	HPN

DEPARTMENT OF THE NAVY
NAVAL FACILITIES ENGINEERING SYSTEMS COMMAND - MID-ATLANTIC
MID-ATLANTIC
NAVAL FACILITIES ENGINEERING SYSTEMS COMMAND
NAVAL STATION - NORFOLK, VA
NAVAL SUBMARINE BASE NEW LONDON
GROTON, CONNECTICUT
P-1102 WEAPONS MAGAZINE & ORDNANCE OPERATIONS FACILITY
SENTRY
SECURITY FLOOR PLAN

SCALE:	AS NOTED
EPROJECT NO.:	1667770
CONSTR. CONTR. NO.	
NAVFAC DRAWING NO.	12894150
SHEET	63 OF 65

TY101

6/20/2025 9:11:52 AM TY101
\\uc1vs01fileqp\PF02E1628\TELE\BLDG-1667770-T-BIM_SENTRY.rvt

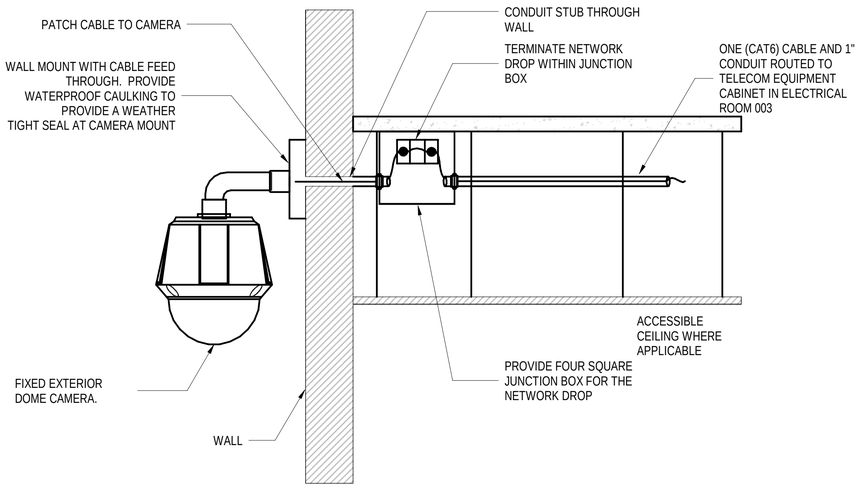

C1 EXTERIOR WALL MOUNTED FIXED CAMERA DETAIL

3" = 1'-0"

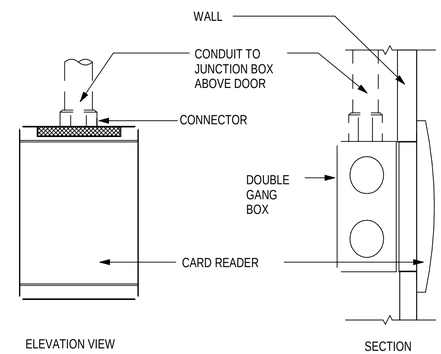

C3 CARD READER

NTS

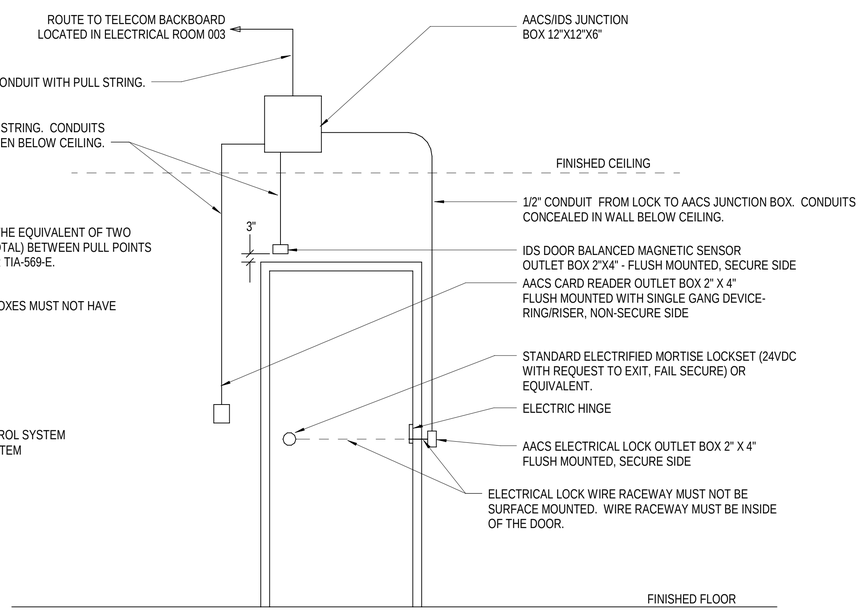

NOTES:

1. THERE MUST NOT BE MORE THAN THE EQUIVALENT OF TWO QUARTER BENDS (180 DEGREES TOTAL) BETWEEN PULL POINTS (CONDUIT BODIES AND BOXES) PER TIA-569-E.

2. ALL SURFACE MOUNTED OUTLET BOXES MUST NOT HAVE KNOCKOUTS.

ABBREVIATIONS:

AACS	AUTOMATED ACCESS CONTROL SYSTEM
IDS	INTRUSION DETECTION SYSTEM
VDC	VOLTS, DIRECT CURRENT

A1 SECURITY SINGLE SECURED DOOR DETAIL

NTS

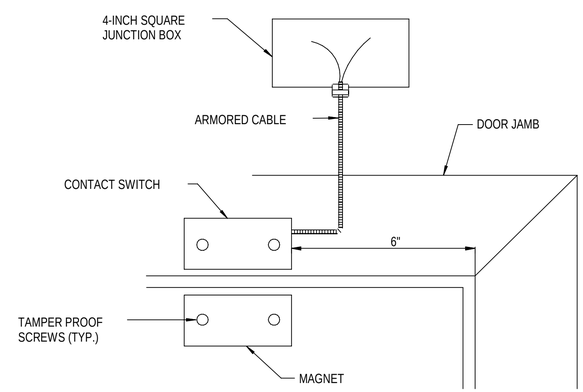

A4 SCREW MOUNT DOOR CONTACT

NTS

SYM	DESCRIPTION	DATE	APPR

NAVFAC

REGISTERED COMMUNICATIONS DISTRIBUTION DESIGNER 6123/1BGBS Bicsi Rene Rubio BICSI ID #112613 EXPIRES 12-31-26 RCDD SEAL

Jacobs
1100 NORTH GLEBE ROAD
SUITE 500
ARLINGTON, VIRGINIA 22201
571.218.1000
FAX: 571.218.1600

A/E INFO

APPROVED

FOR COMMANDER NAVFAC 8/14/2025

ACTIVITY: APPROVED BY LCDR ELIZABETH OLOKODE NAVFAC NLON FEAD DIRECTOR NEW LONDON, GROTON, CT

SATISFACTORY TO DATE 05/27/2025

DES	MG	DRW	LA	CHK	RR

PM/DM	SMS/CWJ
BRANCH MANAGER	WRB
CHIEF ENG/ARCH	JWJ
FIRE PROTECTION	HPN

DEPARTMENT OF THE NAVY
NAVAL FACILITIES ENGINEERING SYSTEMS COMMAND
NAVAL FACILITIES ENGINEERING SYSTEMS COMMAND - MID-ATLANTIC
MID-ATLANTIC
NAVAL STATION - NORFOLK, VA
NAVAL SUBMARINE BASE NEW LONDON
GROTON, CONNECTICUT
P-1102 WEAPONS MAGAZINE & ORDNANCE OPERATIONS FACILITY
SENTRY
SECURITY DETAILS

SCALE: AS NOTED

EPROJECT NO.: 1667770

CONSTR. CONTR. NO.

NAVFAC DRAWING NO. 12894151

SHEET 64 OF 65

TY501

6/20/2025 9:11:54 AM TY501
\\bc1vs01fdsp/PDZE16293\TE\ELE\BLDG-1667770-T-BIM_SENTRY.rvt

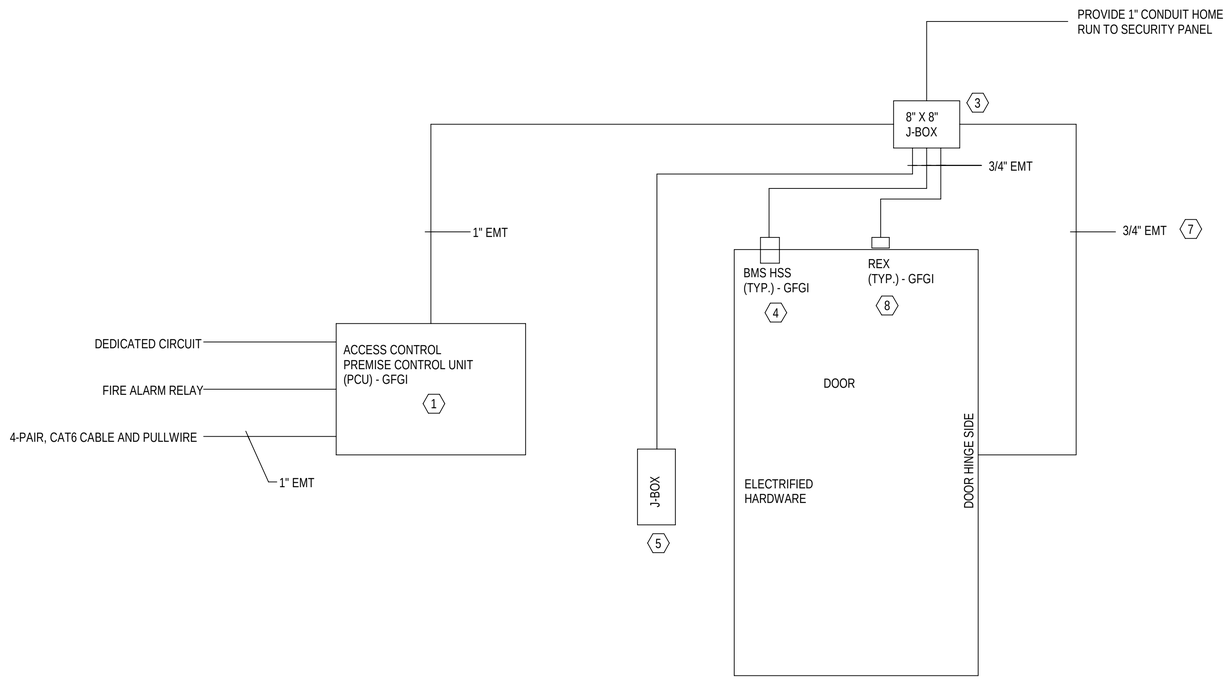

C1 TYPICAL ACESS CONTROL SYSTEM (SINGLE DOOR)
NTS

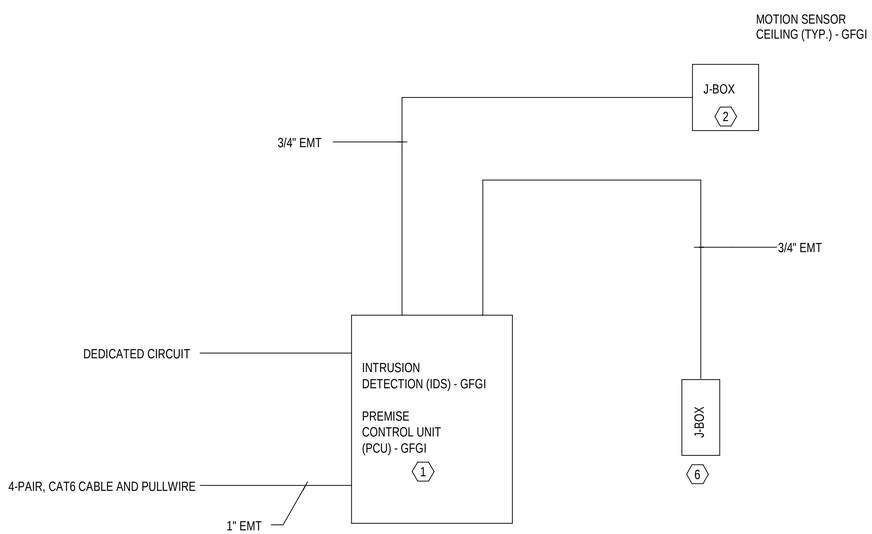

A1 TYPICAL INTRUSTION DETECTION SYSTEM DETAIL
NTS

GENERAL SHEET NOTES

1. SEE SHEET T-001 FOR GENERAL NOTES, SYMBOLS AND ABBREVIATIONS.
2. ALL CONDUIT IS 3/4" EMT CONDUIT WITH COMPRESSION FITTINGS U.N.O. STATED. PULLSTRING INSTALLED WITH EACH CONDUIT.
3. CONDUIT RUNS SHOWN BETWEEN SYSTEM COMPONENTS ARE SCHEMATIC ONLY.
4. ALL CONDUIT MUST BE MOUNTED BEHIND WALLS, AND JUNCTION BOXES MUST BE RECESSED INTO BOTH THE WALL AND CEILING.
5. ALL JUNCTION BOXES MUST BE PROVIDED WITH COVER PLATES.

SHEET KEYNOTES

1. PCU PANEL IS (GFGI). COORDINATE ELECTRICAL JUNCTION BOX WITHIN PANEL BACKPLANE FOR HARDWIRED 110VAC POWER.
2. A 4" FLUSH MOUNT OCTOGONAL JUNCTION BOX MOUNTED ON CEILING FOR LOCATION OF PASSIVE MOTION SENSOR. NO BOX MUST BE CLOSER TO 36" FROM EITHER AN AIR DUCT OR A LIGHT FIXTURE.
3. 8"X8" JUNCTION BOX MOUNTED ABOVE CEILING 6" ABOVE LATCH SIDE OF THE DOOR.
4. BALANCED MAGNETIC SWITCH ACTUATING MAGNET OR HIGH SECURITY SWITCH. (GFGI)
5. 2"X4" BACKBOX FOR CARD READER OR KEYPAD CARD READER RECESSED JUNCTION BOX MOUNTED 42" AFF.
6. 2"X4" BACKBOX FOR KEYPAD IDS SYSTEM RECESSED JUNCTION BOX MOUNTED 42" AFF.
7. 3/4" FLEX CONDUIT ROUTED DOWN DOOR FRAME TO POWER TRANSFER HINGE.
8. 3/4" FLEX CONDUIT TO EXTERNAL REX READER. (NOTE: NOT REQUIRED IF ELECTRIFIED HARDWARE HAS INTERNAL REX.) COORDINATE DESIGN WITH OWNER PRIOR TO ROUGH-IN.

SYM	DESCRIPTION	DATE	APPR

NAVFAC

REGISTERED COMMUNICATIONS DISTRIBUTION DESIGNER
6123180085
Bicsi
Rene Rubio
BICSI ID #112613
EXPIRES 12-31-26
RCDD
SEAL

Jacobs
1100 NORTH GLEBE ROAD
SUITE 500
ARLINGTON, VIRGINIA 22201
571.218.1000
FAX: 571.218.1600
A/E INFO

APPROVED
FOR COMMANDER NAVFAC 8/14/2025
ACTIVITY
APPROVED BY LCDR ELIZABETH
OLOKODE NAVFAC NLON FEAD
DIRECTOR NEW LONDON, GROTON, CT
SATISFACTORY TO DATE 05/27/2025

DES	DRW	CHK
MG	LA	RR

PM/DM	SMS/CWJ
BRANCH MANAGER	WRB
CHIEF ENG/ARCH	JWJ
FIRE PROTECTION	HPN

DEPARTMENT OF THE NAVY
NAVAL FACILITIES ENGINEERING SYSTEMS COMMAND
NAVAL FACILITIES ENGINEERING SYSTEMS COMMAND - MID-ATLANTIC
MID-ATLANTIC
NAVAL STATION - NORFOLK, VA
NAVAL SUBMARINE BASE NEW LONDON
GROTON, CONNECTICUT
P-1102 WEAPONS MAGAZINE & ORDNANCE OPERATIONS FACILITY
SENTRY
SECURITY DETAILS

SCALE: AS NOTED
EPROJECT NO.: 1667770
CONSTR. CONTR. NO.
NAVFAC DRAWING NO.
12894152
SHEET 65 OF 65
TY502

6/20/2025 9:11:55 AM TY502
\\NA-1v901fedpnjPDZE1fi2ISITEELEBLDG-1667770-T-BIM_SENTRY.rvt