P-1102 WEAPONS MAGAZINE & ORDNANCE OPERATIONS FACILITY

OPERATIONS

NAVAL SUBMARINE BASE NEW LONDON, GROTON, CONNECTICUT

NAVAL FACILITIES ENGINEERING SYSTEMS COMMAND - MID-ATLANTIC

NAVFAC FACILITIES ENGINEERING AND ACQUISITION DIVISION (FEAD)

FINAL DESIGN

6/23/2025

SYM	DESCRIPTION	DATE	APPR

NAVFAC

COMMONWEALTH OF VIRGINIA
PETER SOUKAS
Lic. No. 401017157
6/23/2025
ARCHITECT
SEAL

Jacobs
1100 NORTH GLEBE ROAD
SUITE 500
ARLINGTON, VIRGINIA 22201
571.218.1000
FAX: 571.218.1600

A/E INFO

APPROVED

FOR COMMANDER NAVFAC 8/14/2025

ACTIVITY
APPROVED BY LCDR ELIZABETH
OLOKODE NAVFAC NLON FEAD
DIRECTOR NEW LONDON, GROTON, CT

SATISFACTORY TO DATE 05/27/2025

DES	PS	DRW	PS	CHK	WS

PMDM	SMS/ CWJ
BRANCH MANAGER	NEK
CHIEF ENG/ARCH	JWJ
FIRE PROTECTION	HPN

DEPARTMENT OF THE NAVY
NAVAL FACILITIES ENGINEERING SYSTEMS COMMAND
MID-ATLANTIC
NAVAL FACILITIES ENGINEERING SYSTEMS COMMAND - MID-ATLANTIC
NAVAL STATION, NORFOLK, VA
NAVAL SUBMARINE BASE NEW LONDON
GROTON, CONNECTICUT
P-1102 WEAPONS MAGAZINE & ORDNANCE OPERATIONS FACILITY
OPERATIONS
GENERAL COVER SHEET

SCALE: AS NOTED
EPROJECT NO.: 1667770
CONSTR. CONTR. NO.
NAVFAC DRAWING NO. 12893951
SHEET 1 OF 140

G-001

VICINITY / BASE MAP

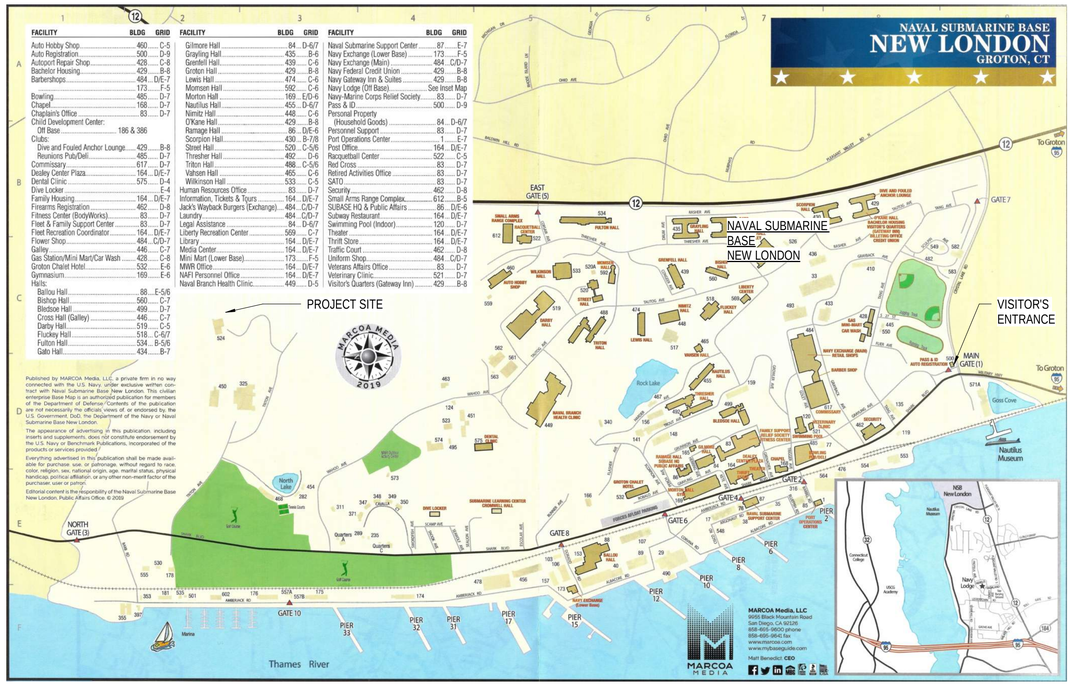

FACILITY	BLDG	GRID
Auto Hobby Shop	460	C-5
Auto Registration	500	D-9
Autosport Repair Shop	428	C-8
Bachelor Housing	429	B-8
Barbershops	484	D/E-7
	173	F-5
Bowling	485	D-7
Chapel	168	D-7
Chaplain's Office	83	D-7
Child Development Center:		
Off Base	186 & 386	
Clubs:		
Dive and Fouled Anchor Lounge	429	B-8
Reunions Pub/Deli	485	D-7
Commissary	617	D-7
Dealey Center Plaza	164	D/E-7
Dental Clinic	575	D-4
Dive Locker		E-4
Family Housing	164	D/E-7
Firearms Registration	462	D-8
Fitness Center (BodyWorks)	83	D-7
Fleet & Family Support Center	83	D-7
Fleet Recreation Coordinator	164	D/E-7
Flower Shop	484	C/D-7
Galley	446	C-7
Gas Station/Mini Mart/Car Wash	428	C-8
Groton Chalet Hotel	532	E-6
Gymnasium	169	E-6
Halls:		
Ballou Hall	88	E-5/6
Bishop Hall	560	C-7
Bledsoe Hall	499	D-7
Cross Hall (Galley)	446	C-7
Darby Hall	519	C-5
Flutkey Hall	518	C-6/7
Fulton Hall	534	B-5/6
Gato Hall	434	B-7

FACILITY	BLDG	GRID
Gillmore Hall	84	D-6/7
Grayling Hall	435	B-6
Greenfell Hall	439	C-6
Groton Hall	429	B-8
Lewis Hall	474	C-6
Momsen Hall	592	C-6
Morton Hall	169	E/D-6
Nautilus Hall	455	D-6/7
Nimitz Hall	448	C-6
O'Kane Hall	429	B-8
Ramage Hall	86	D/E-6
Scorpion Hall	430	B-7/8
Street Hall	520	C-5/6
Thresher Hall	492	D-6
Tritton Hall	488	C-5/6
Vahsen Hall	465	C-6
Wilkinson Hall	533	C-5
Human Resources Office	83	D-7
Information, Tickets & Tours	164	D/E-7
Jack's Wayback Burgers (Exchange)	484	C/D-7
Laundry	484	C/D-7
Legal Assistance	84	D-6/7
Liberty Recreation Center	569	C-7
Library	164	D/E-7
Media Center	164	D/E-7
Mini Mart (Lower Base)	173	F-5
MWR Office	164	D/E-7
NAPI Personnel Office	164	D/E-7
Naval Branch Health Clinic	449	D-5

FACILITY	BLDG	GRID
Naval Submarine Support Center	87	E-7
Navy Exchange (Lower Base)	173	F-5
Navy Exchange (Main)	484	C/D-7
Navy Federal Credit Union	429	B-8
Navy Gateway Inn & Suites	429	B-8
Navy Lodge (Off Base)	See Inset Map	
Navy-Marine Corps Relief Society	83	D-7
Pass & ID	500	D-9
Personal Property (Household Goods)	84	D-6/7
Personnel Support	83	D-7
Port Operations Center	1	E-7
Post Office	164	D/E-7
Racquetball Center	522	C-5
Red Cross	83	D-7
Retired Activities Office	83	D-7
SATO	83	D-7
Security	462	D-8
Small Arms Range Complex	612	B-5
SUBASE HQ & Public Affairs	86	D/E-6
Subway Restaurant	164	D/E-7
Swimming Pool (Indoor)	120	D-7
Theater	164	D/E-7
Thrift Store	164	D/E-7
Traffic Court	462	D-8
Uniform Shop	484	C/D-7
Veterans Affairs Office	83	D-7
Veterinary Clinic	521	D-7
Visitor's Quarters (Gateway Inn)	429	B-8

Published by MARCOA Media, LLC, a private firm in no way connected with the U.S. Navy, under exclusive written contract with Naval Submarine Base New London. This civilian enterprise Base Map is an authorized publication for members of the Department of Defense. Contents of the publication are not necessarily the official views of, or endorsed by, the U.S. Government, DoD, the Department of the Navy or Naval Submarine Base New London.

The appearance of advertising in this publication, including inserts and supplements, does not constitute endorsement by the U.S. Navy or Benchmark Publications, Incorporated of the products or services provided.

Everything advertised in this publication shall be made available for purchase, sale, or patronage, without regard to race, color, religion, sex, national origin, age, marital status, physical handicap, political affiliation, or any other non-merit factor of the purchaser, user or patron.

Editorial content is the responsibility of the Naval Submarine Base New London Public Affairs Office. © 2019

LOCATION MAP

6/20/2025 10:31:35 AM
G-001
\\DC1-V901\Bedpy\PROJE\1629\ARCH\BILDG-1667770-A-BIM.rvt

LIST OF SHEETS

SHEET NO. NO.	SHEET NO. SHEET	NAVFAC DWG. NO.	SHEET TITLE
GENERAL			
1	G-001	12893951	GENERAL COVER SHEET
2	G-002	12893952	GENERAL LIST OF SHEETS
3	G-101	12893953	GENERAL BUILDING CODE ANALYSIS
4	G-102	12893954	GENERAL FLOOR PLAN - LIFE SAFETY
5	G-103	12893955	CODE COMPLIANCE SITE PLAN - AREA A
STRUCTURAL			
6	S-001	12893956	GENERAL NOTES, ABBREVIATIONS & LEGEND
7	S-002	12893957	DESIGN CRITERIA & LOADS
8	S-003	12893958	MATERIAL NOTES
9	S-101	12893959	FOUNDATION & GROUND FLOOR PLAN
10	S-102	12893960	ROOF FRAMING PLANS
11	S-201	12893961	BUILDING ELEVATIONS
12	S-202	12893962	BUILDING ELEVATIONS
13	S-401	12893963	DUMPSTER ENCLOSURE
14	S-501	12893964	TYPICAL FOUNDATION & CONCRETE DETAILS
15	S-502	12893965	TYPICAL SLAB-ON-GROUND DETAILS
16	S-503	12893966	TYPICAL CONCRETE WALL DETAILS
17	S-504	12893967	TYPICAL STEEL DETAILS
18	S-505	12893968	TYPICAL JOIST DETAILS
19	S-510	12893969	SECTIONS & DETAILS
20	S-601	12893970	SCHEDULES
21	S-901	12893971	3D ISOMETRIC VIEWS
ARCHITECTURAL			
22	A-001	12893972	ARCHITECTURAL NOTES AND SYMBOLS
23	A-002	12893973	ARCHITECTURAL ACCESSIBILITY STANDARDS & MOUNTING HEIGHTS
24	A-003	12893974	ARCHITECTURAL AIR BARRIER INFORMATION
25	A-101	12893975	ARCHITECTURAL FLOOR PLAN
26	A-102	12893976	ARCHITECTURAL REFLECTED CEILING PLAN
27	A-103	12893977	ARCHITECTURAL ROOF PLAN
28	A-201	12893978	ARCHITECTURAL BUILDING ELEVATIONS
29	A-301	12893979	ARCHITECTURAL BUILDING SECTIONS
30	A-302	12893980	ARCHITECTURAL WALL SECTIONS
31	A-401	12893981	ARCHITECTURAL ENLARGED PLANS
32	A-501	12893982	ARCHITECTURAL EXTERIOR DETAILS
33	A-502	12893983	ARCHITECTURAL MISCELLANEOUS DETAILS
34	A-503	12893984	OPENING DETAILS
35	A-510	12893985	TYPICAL ROOF DETAILS
36	A-601	12893986	ARCHITECTURAL SCHEDULES
37	A-602	12893987	ARCHITECTURAL PARTITION TYPES
38	A-603	12893988	ARCHITECTURAL EXTERIOR MATERIAL SCHEDULE
INTERIORS			
39	I-101	12893989	FF&E PLAN & SCHEDULE
40	I-102	12893990	INTERIOR FINISH PLAN & ROOM FINISH SCHEDULE
41	I-103	12893991	SIGNAGE PLAN & SCHEDULE
42	I-401	12893992	OFFICE PLANS & ISOMETRIC VIEWS
43	I-402	12893993	WORKSTATION PLANS & ISOMETRIC VIEWS
44	I-403	12893994	INTERIOR ENLARGED PLANS & ELEVATIONS
45	I-404	12893995	INTERIOR ENLARGED PLANS & ELEVATIONS
46	I-405	12893996	INTERIOR ENLARGED PLANS & ELEVATIONS
47	I-501	12893997	INTERIOR DETAILS
48	I-502	12893998	SIGNAGE DETAILS
49	I-601	12893999	INTERIOR MATERIALS FINISH SCHEDULE

SHEET NO. NO.	SHEET NO. SHEET	NAVFAC DWG. NO.	SHEET TITLE
FIRE PROTECTION			
50	FX001	12894000	FIRE SUPPRESSION SYMBOLS, LEGEND, ABBREVIATIONS AND NOTES
51	FX101	12894001	FIRE SUPPRESSION FLOOR PLAN
52	FX501	12894002	FIRE SUPPRESSION RISER AND DETAILS
FIRE ALARM			
53	FA001	12894003	FIRE ALARM AND MASS NOTIFICATION SYMBOLS, LEGEND, ABBREVIATIONS AND NOTES
54	FA101	12894004	FIRE ALARM AND MASS NOTIFICATION FLOOR PLAN
55	FA501	12894005	FIRE ALARM AND MASS NOTIFICATION RISER DIAGRAM, MATRIX, AND DETAILS
PLUMBING			
56	P-001	12894006	PLUMBING LEGEND AND GENERAL NOTES
57	P-101	12894007	PLUMBING SANITARY & VENT FLOOR PLAN
58	P-102	12894008	PLUMBING DOMESTIC WATER FLOOR PLAN
59	P-103	12894009	PLUMBING ROOF PLAN
60	P-104	12894010	PLUMBING RADON MITIGATION FLOOR PLAN
61	P-301	12894011	PLUMBING SECTIONS
62	P-401	12894012	PLUMBING ENLARGED PLANS - SANITARY & VENT
63	P-402	12894013	PLUMBING ENLARGED PLANS - DOMESTIC WATER
64	P-501	12894014	PLUMBING DETAILS
65	P-502	12894015	PLUMBING DETAILS
66	P-601	12894016	PLUMBING SCHEDULES
67	P-901	12894017	PLUMBING RISER DIAGRAMS - SANITARY WASTE & VENT
68	P-902	12894018	PLUMBING RISER DIAGRAMS - DOMESTIC WATER
MECHANICAL			
69	M-001	12894019	MECHANICAL LEGEND, ABBREVIATIONS AND NOTES
70	M-101	12894020	MECHANICAL FLOOR PLAN - DUCTWORK
71	MP101	12894021	MECHANICAL FLOOR PLAN - PIPING
72	M-301	12894022	MECHANICAL SECTIONS
73	M-401	12894023	MECHANICAL ENLARGED FLOOR PLAN
74	M-501	12894024	MECHANICAL DETAILS
75	M-502	12894025	MECHANICAL DETAILS
76	M-601	12894026	MECHANICAL SCHEDULES
77	M-800	12894027	MECHANICAL CONTROLS LEGEND AND ABBREVIATIONS
78	M-801	12894028	MECHANICAL CONTROL DIAGRAMS & SEQUENCES
79	M-802	12894029	MECHANICAL CONTROL DIAGRAMS & SEQUENCES
80	M-803	12894030	MECHANICAL CONTROL DIAGRAMS & SEQUENCES
81	M-804	12894031	MECHANICAL CONTROL DIAGRAMS & SEQUENCES
82	M-805	12894032	MECHANICAL CONTROL POINTS SCHEDULE
83	M-806	12894033	MECHANICAL CONTROL POINTS SCHEDULE
84	M-807	12894034	MECHANICAL CONTROL POINTS SCHEDULE
85	M-808	12894035	MECHANICAL CONTROL POINTS SCHEDULE
86	M-809	12894036	MECHANICAL CONTROL POINTS SCHEDULE

SHEET NO. NO.	SHEET NO. SHEET	NAVFAC DWG. NO.	SHEET TITLE
ELECTRICAL			
87	E-001	12894037	ELECTRICAL GENERAL NOTES
88	E-002	12894038	ELECTRICAL ABBREVIATIONS
89	E-003	12894039	ELECTRICAL SYMBOLS
90	E-004	12894040	ELECTRICAL SYMBOLS
91	EG101	12894041	ELECTRICAL GROUNDING PLAN
92	EG102	12894042	ELECTRICAL LIGHTNING PROTECTION PLAN
93	EL101	12894043	ELECTRICAL LIGHTING PLAN
94	EP101	12894044	ELECTRICAL POWER PLAN
95	EP102	12894045	ELECTRICAL EQUIPMENT POWER PLAN
96	E-501	12894046	ELECTRICAL DETAILS
97	E-502	12894047	ELECTRICAL DETAILS
98	E-503	12894048	ELECTRICAL DETAILS
99	E-504	12894049	ELECTRICAL DETAILS
100	E-601	12894050	ELECTRICAL POWER SINGLE LINE DIAGRAM
101	E-701	12894051	LIGHTING FIXTURE AND CONTROLS SCHEDULES
102	E-702	12894052	ELECTRICAL PANEL SCHEDULES
103	E-703	12894053	ELECTRICAL PANEL SCHEDULES
104	E-704	12894054	ELECTRICAL FEEDER SCHEDULE
TELECOMMUNICATIONS			
105	T-001	12894055	TELECOMMUNICATIONS SYMBOLS, LEGEND, ABBREVIATIONS, AND NOTES
106	T-101	12894056	TELECOMMUNICATIONS FLOOR PLAN
107	T-201	12894057	TELECOMMUNICATIONS RACK ELEVATIONS
108	T-202	12894058	TELECOMMUNICATIONS ELEVATIONS
109	T-401	12894059	TELECOMMUNICATIONS ENLARGED PLANS
110	T-501	12894060	TELECOMMUNICATIONS DETAILS
111	T-502	12894061	TELECOMMUNICATIONS DETAILS
112	T-503	12894062	TELECOMMUNICATIONS DETAILS
113	T-504	12894063	TELECOMMUNICATIONS DETAILS
114	T-505	12894064	TELECOMMUNICATIONS DETAILS
115	T-506	12894065	TELECOMMUNICATIONS DETAILS
116	T-507	12894066	TELECOMMUNICATIONS DETAILS
117	T-508	12894067	TELECOMMUNICATIONS DETAILS
118	T-509	12894068	TELECOMMUNICATIONS DETAILS
119	T-510	12894069	TELECOMMUNICATIONS DETAILS
120	T-601	12894070	TELECOMMUNICATIONS RISER DIAGRAMS
121	T-602	12894071	TELECOMMUNICATIONS SCHEDULES
122	T-603	12894072	ONE LINE OSP RISER DIAGRAM
AUDIO VISUAL			
123	TA001	12894073	AUDIO VISUAL SYMBOLS, LEGEND, ABBREVIATIONS, AND NOTES
124	TA002	12894074	AUDIO VISUAL DISPLAY SCHEDULE
125	TA101	12894075	AUDIO VISUAL FLOOR PLAN
126	TA201	12894076	AUDIO VISUAL ELEVATIONS
127	TA202	12894077	AUDIO VISUAL ELEVATIONS
128	TA401	12894078	AUDIO VISUAL ENLARGED PLANS
129	TA402	12894079	AUDIO VISUAL ENLARGED PLANS
130	TA501	12894080	AUDIO VISUAL DETAILS
131	TA502	12894081	AUDIO VISUAL DETAILS
132	TA601	12894082	AUDIO VISUAL DIAGRAMS
133	TA602	12894083	AUDIO VISUAL DIAGRAMS
SECURITY			
134	TY001	12894084	SECURITY SYMBOLS, LEGEND, ABBREVIATIONS, AND NOTES
135	TY101	12894085	SECURITY FLOOR PLAN
136	TY501	12894086	SECURITY DETAILS
137	TY502	12894087	SECURITY DETAILS
138	TY503	12894088	SECURITY DETAILS
139	TY504	12894324	SECURITY DETAILS
140	TY601	12894323	SECURITY SCHEMATIC DESIGN

SYM	DESCRIPTION	DATE	APPR

NAVFAC

COMMONWEALTH OF VIRGINIA
PETER SOUKAS
Lic. No. 401017157
6/23/2025
ARCHITECT
SEAL

Jacobs
1100 NORTH GLEBE ROAD
SUITE 500
ARLINGTON, VIRGINIA 22201
571.218.1000
FAX: 571.218.1600
A/E INFO

APPROVED
FOR COMMANDER NAVFAC 8/14/2025
ACTIVITY
APPROVED BY LCDR ELIZABETH OLOKODE NAVFAC NLON FEAD DIRECTOR NEW LONDON, GROTON, CT

SATISFACTORY TO DATE	05/27/2025		
DES PS	DRW PS	CHK WS	
PM/DM	SMS/ CWJ		
BRANCH MANAGER	NEK		
CHIEF ENG/ARCH	JWJ		
FIRE PROTECTION	HPN		

DEPARTMENT OF THE NAVY
NAVAL FACILITIES ENGINEERING SYSTEMS COMMAND - MID-ATLANTIC
MID-ATLANTIC
NAVAL FACILITIES ENGINEERING SYSTEMS COMMAND
NAVAL STATION - NORFOLK, VA
NAVAL SUBMARINE BASE NEW LONDON
GROTON, CONNECTICUT
P-1102 WEAPONS MAGAZINE & ORDNANCE OPERATIONS FACILITY
OPERATIONS
GENERAL LIST OF SHEETS

SCALE: AS NOTED
EPROJECT NO.: 1667770
CONSTR. CONTR. NO.
NAVFAC DRAWING NO. 12893952
SHEET 2 OF 140
G-002

6/20/2025 10:31:42 AM G-002
\\dc1-vs01\depj\PDZE1628\ARCHIBLDG-1667770-A-BIM.rvt

LIFE SAFETY GENERAL NOTES

APPLICABLE CODES:

- INTERNATIONAL BUILDING CODE	(2021 EDITION)
- NFPA 1 FIRE CODE	(2021 EDITION)
- NFPA 13, STANDARD FOR THE INSTALLATION OF SPRINKLER SYSTEMS	(2022 EDITION)
- NFPA 70, NATIONAL ELECTRICAL CODE	(2020 EDITION)
- NFPA 72, NATIONAL FIRE ALARM AND SIGNALING CODE	(2022 EDITION)
- NFPA 101, LIFE SAFETY CODE	(2021 EDITION)
- UFC 1-200-01, DOD BUILDING CODE	(CHANGE 1, 1 SEPT 2022)
- UFC 3-600-01, FIRE PROTECTION ENGINEERING FOR FACILITIES	(CHANGE 6, 6 MAY 2021)
- UFC 4-021-01, DESIGN AND O&M: MASS NOTIFICATION SYSTEMS	(CHANGE 1, JANUARY 2010)

CONSTRUCTION TYPE: TYPE II-B

OCCUPANCY:

IBC REQUIREMENTS:
NON-SEPARATED MIXED-USE

ASSEMBLY A-3	(IBC 303.4)
BUSINESS B	(IBC 304.1)
RESIDENTIAL R-2	(IBC 310.4)
STORAGE S-2	(IBC 311.3)

NFPA REQUIREMENTS:

MIXED OCCUPANCY	(NFPA 101 6.1.14.2.2
ASSEMBLY	(NFPA 101 6.1.2.1)
BUSINESS	(NFPA 101 6.1.11.1)
RESIDENTIAL	(NFPA 101 6.1.8.1)
STORAGE:	(NFPA 101 6.1.13)

SPRINKLERED: YES

FIRE ALARM: YES

ALLOWABLE HEIGHT: 3 STORIES / 75 FT (IBC TABLE 504.3, TABLE 504.4)

ALLOWABLE AREA: 38,000 FT^2 (IBC 508.3.2)
NOTE: ALLOWABLE AREA IS BASED ON THE MOST RESTRICTIVE OCCUPANCY PRESENT WHICH IS THE ASSEMBLY A-3 OCCUPANCY.

ACTUAL HEIGHT: 1 STORY / 22 FT

ACTUAL AREA: 11,205 FT^2

REQUIRED FIRE RESISTANCE RATINGS:

BUILDING ELEMENT	FIRE RESISTANCE RATING	CODE REFERENCE
PRIMARY STRUCTURAL FRAME	0 HOUR	IBC TABLE 601
BEARING WALLS		
EXTERIOR	0 HOUR	IBC TABLE 601
INTERIOR	0 HOUR	
FLOOR CONSTRUCTION	0 HOUR	IBC TABLE 601
ROOF CONSTRUCTION	0 HOUR	IBC TABLE 601
NON BEARING WALLS AND PARTITIONS		
EXTERIOR	0 HOUR	IBC TABLE 601
INTERIOR	0 HOUR	IBC TABLE 601

MEANS OF EGRESS REQUIREMENTS: REQUIREMENTS ARE BASED ON NFPA 101 PER UFC 3-600-01 2-1.1.

		MAXIMUM ALLOWED	PROVIDED
MINIMUM NUMBER OF EXITS:	2 (NFPA 101, 7.4.1)		
MAXIMUM TRAVEL DISTANCE:	ASSEMBLY	250 FT (NFPA 101 12.2.6)	74 FT
	BUSINESS	300 FT (NFPA 101 38.2.6.1)	119 FT
	RESIDENTIAL	200 FT (NFPA 101 28.2.6.3.3.1)	29 FT
	STORAGE	400 FT (NFPA 101 42.2.6)	106 FT
MAXIMUM DEAD-END:	ASSEMBLY	20 FT (NFPA 101 12.2.5.1.3)	0 FT
	BUSINESS	50 FT (NFPA 101 38.2.5.2.1)	24 FT
	RESIDENTIAL	50 FT (NFPA 101 28.2.5.6)	0 FT
	STORAGE	100 FT (NFPA 101 42.2.5)	0 FT
MAXIMUM COMMON PATH:	ASSEMBLY	20 FT (NFPA 101 12.2.5.1.2) 75 FT, WHEN SERVING NOT MORE THAN 50 OCCUPANTS (NFPA 101 12.2.5.1.2)	0 FT
	BUSINESS	100 FT (NFPA 101 38.2.5.3.1)	58 FT
	RESIDENTIAL	50 FT (NFPA 101 28.2.5.3)	0 FT
	STORAGE	100 FT (NFPA 101 42.2.5)	0 FT
MINIMUM EGRESS WIDTH DOORS:	32 INCHES (NFPA 101 7.2.1.2.3.2)		34 INCHES
DOOR EGRESS CAPACITY:	0.2 IN/OCC (NFPA 101 TABLE 7.3.3.1)		

LIFE SAFETY ABBREVIATIONS

AFF	ABOVE FINISHED FLOOR
AHJ	AUTHORITY HAVING JURISDICTION
ANN	ANNUNCIATOR PANEL
AVG	AVERAGE
CO	CONTRACTING OFFICER
COR	CONTRACTING OFFICER'S REPRESENTATIVE
CP	COMMON PATH
ELEV	ELEVATION
IBC	INTERNATIONAL BUILDING CODE
FE	FIRE EXTINGUISHER
FMCP	FIRE ALARM/ MASS NOTIFICATION CONTROL PANEL
FPDOR	FIRE PROTECTION DESIGNER OF RECORD
FT	FOOT
LSC	LIFE SAFETY CODE
MIN	MINIMUM
NFPA	NATIONAL FIRE PROTECTION ASSOCIATION
NP	NOT PERMITTED
NC	NONCOMBUSTIBLE
NIC	NOT IN CONTRACT
NTS	NOT TO SCALE
OLF	OCCUPANT LOAD FACTOR
SQFT	SQUARE FEET
TD	TRAVEL DISTANCE
TYP	TYPICAL
UNO	UNLESS NOTED OTHERWISE

SYM	DESCRIPTION	DATE	APPR

NAVFAC

STATE OF CONNECTICUT · JEFFREY C. McLAUGHLIN · No. 25368 · LICENSED PROFESSIONAL ENGINEER
6/23/2025
SEAL

Jacobs
1100 NORTH GLEBE ROAD
SUITE 500
ARLINGTON, VIRGINIA 22201
571.218.1000
FAX: 571.218.1600

A/E INFO

APPROVED
FOR COMMANDER NAVFAC 8/14/2025

ACTIVITY
APPROVED BY LCDR ELIZABETH OLOKODE NAVFAC NLON FEAD DIRECTOR NEW LONDON, GROTON, CT

SATISFACTORY TO DATE	05/27/2025
DES JM	DRW CL / CHK JB
PM/DM	SMS/CWJ
BRANCH MANAGER	HPN
CHIEF ENG/ARCH	JWJ
FIRE PROTECTION	HPN

DEPARTMENT OF THE NAVY
NAVAL FACILITIES ENGINEERING SYSTEMS COMMAND
NAVAL FACILITIES ENGINEERING SYSTEMS COMMAND - MID-ATLANTIC
MID-ATLANTIC
NAVAL SUBMARINE BASE NEW LONDON
NAVAL STATION - NORFOLK, VA
GROTON, CONNECTICUT
P-1102 WEAPONS MAGAZINE & ORDNANCE OPERATIONS FACILITY
OPERATIONS
GENERAL BUILDING CODE ANALYSIS

SCALE: AS NOTED
EPROJECT NO.: 1667770
CONSTR. CONTR. NO.
NAVFAC DRAWING NO. 12893953
SHEET 3 OF 140
G-101

6/20/2025 11:28:38 AM G-101
\\uc1vs01fedpj\FD2E1628\FPROBLDG-1667770-F-BIM_v21.rvt

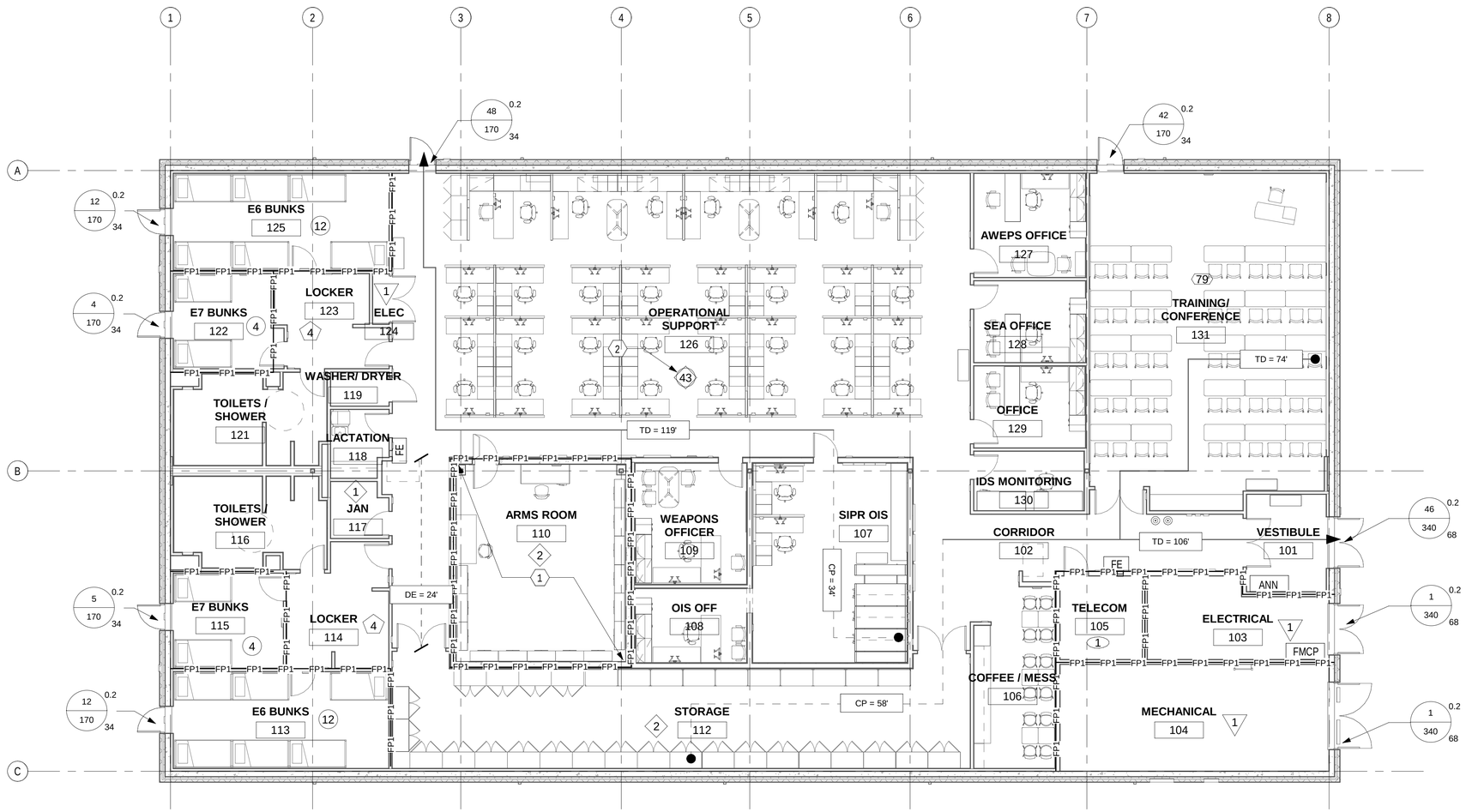

B1 FIRST FLOOR PLAN - LIFE SAFETY

1/8" = 1'-0"

NON- BUSINESS LIFE SAFETY OCCUPANCY SCHEDULE

ROOM NUMBER	NAME	AREA	DESCRIPTION	OLF	OCCUPANT LOAD
103	ELECTRICAL	203 SF	MECHANICAL ELECTRICAL ROOMS	500 SF	1
104	MECHANICAL	425 SF	MECHANICAL ELECTRICAL ROOMS	500 SF	1
105	TELECOM	103 SF	IT/ TELECOM ROOMS	300 SF	1
111/110	ARMORY WORK BENCHES / STORAGE	509 SF	STORAGE USE	500 SF	2
112	STORAGE	896 SF	STORAGE USE	500 SF	2
113	E6 BUNKS	322 SF	BUNK ROOMS	# OF BEDS	12
114	LOCKER	135 SF	LOCKER ROOMS	50 SF	4
115	E7 BUNKS	142 SF	BUNK ROOMS	# OF BEDS	4
117	JAN	50 SF	STORAGE USE	500 SF	1
122	E7 BUNKS	141 SF	BUNK ROOMS	# OF BEDS	4
123	LOCKER	159 SF	LOCKER ROOMS	50 SF	4
124	ELECTRICAL	20 SF	MECHANICAL ELECTRICAL ROOMS	500 SF	1
125	E6 BUNKS	324 SF	BUNK ROOMS	# OF BEDS	12
131	TRAINING / CONFERENCE	1,182 SF	CONFERENCE ROOMS	15 SF	79

LIFE SAFETY OCCUPANT DATA

OCCUPANT LOAD

TOTAL FLOOR AREA:	11, 205 SQFT
TOTAL NON-BUSINESS USE AREA:	4,833 SQFT
TOTAL BUSINESS USE AREA:	6,372 SQFT
BUSINESS OCCUPANT LOAD FACTOR:	150 GROSS SQFT PER OCCUPANT
BUSINESS OCCUPANT LOAD:	43 PERSONS
TOTAL OCCUPANT LOAD:	170 PERSONS

MEANS OF EGRESS CAPACITY AND EXITS

THREE EXTERIOR EXIT DOORS ARE PROVIDED WITH A CLEAR WIDTH OF 68 IN.
TOTAL EXIT CAPACITY: 340 PERSONS
SIX EXTERIOR EXIT DOORS ARE PROVIDED WITH A CLEAR WIDTH OF 34 IN.
TOTAL EXIT CAPACITY: 170 PERSONS

GENERAL SHEET NOTES

SHEET KEYNOTES

1. ARMORY CEILING MUST BE FIRE RESISTANCE RATED FOR A MINIMUM OF 1 HOUR.
2. OCCUPANT LOAD INDICATED IS THE ENTIRE BUSINESS USE OCCUPANT LOAD.

SYMBOL	DESCRIPTION
XX	BUSINESS (150 GROSS)
XX	BUNK ROOMS (50 GROSS)
XX	CONFERENCE ROOMS (15 NET)
XX	ACCESSORY/STORAGE (500 GROSS)
XX	MECHANICAL/ELECTRICAL SPACES (500 GROSS)
XX	LOCKER ROOMS (50 GROSS)
XX	IT/TELECOM ROOMS (300 GROSS)
—FP1—FP1—FP1—	1 HOUR FIRE PARTITION
TD = XX	TRAVEL DISTANCE (MEASURED IN FEET)
CP = XX	COMMON PATH (MEASURED IN FEET)
DE = XX	DEAD END CORRIDOR (MEASURED IN FEET)
X W Y Z	W = EXIT CAPACITY FACTOR (IN./PERSON) X = OCCUPANTS USING EXIT (PERSONS) Y = EXIT CAPACITY (PERSONS) Z = EXIT CLEAR WIDTH (IN.)

0 4' 8' 16' 24'
1/8" = 1'-0"

PLAN NORTH

SYM	DESCRIPTION	DATE	APPR

NAVFAC

STATE OF CONNECTICUT
JEFFREY C. McLAUGHLIN
No. 25368
LICENSED
PROFESSIONAL ENGINEER
6/23/2025
SEAL

Jacobs
1100 NORTH GLEBE ROAD
SUITE 500
ARLINGTON, VIRGINIA 22201
571.218.1000
FAX: 571.218.1600

A/E INFO

APPROVED
FOR COMMANDER NAVFAC 8/14/2025

ACTIVITY
APPROVED BY LCDR ELIZABETH OLOKODE NAVFAC NLON FEAD DIRECTOR NEW LONDON, GROTON, CT

SATISFACTORY TO DATE	05/27/2025		
DES	JM	DRW CL	CHK JB
PM/DM	SMS/CWJ		
BRANCH MANAGER	HPN		
CHIEF ENG/ARCH	JWJ		
FIRE PROTECTION	HPN		

DEPARTMENT OF THE NAVY
NAVAL FACILITIES ENGINEERING SYSTEMS COMMAND - MID-ATLANTIC
MID-ATLANTIC
NAVAL FACILITIES ENGINEERING SYSTEMS COMMAND
NAVAL STATION - NORFOLK, VA
NAVAL SUBMARINE BASE NEW LONDON
GROTON, CONNECTICUT
P-1102 WEAPONS MAGAZINE & ORDNANCE OPERATIONS FACILITY
OPERATIONS
GENERAL FLOOR PLAN - LIFE SAFETY

SCALE:	AS NOTED
EPROJECT NO.:	1667770
CONSTR. CONTR. NO.	
NAVFAC DRAWING NO.	12893954
SHEET	4 OF 140

G-102

6/20/2025 11:28:42 AM G-102
\\ad.jacobs.com\eapp\PROJECTS\B1667770-F-BIM_v21.rvt

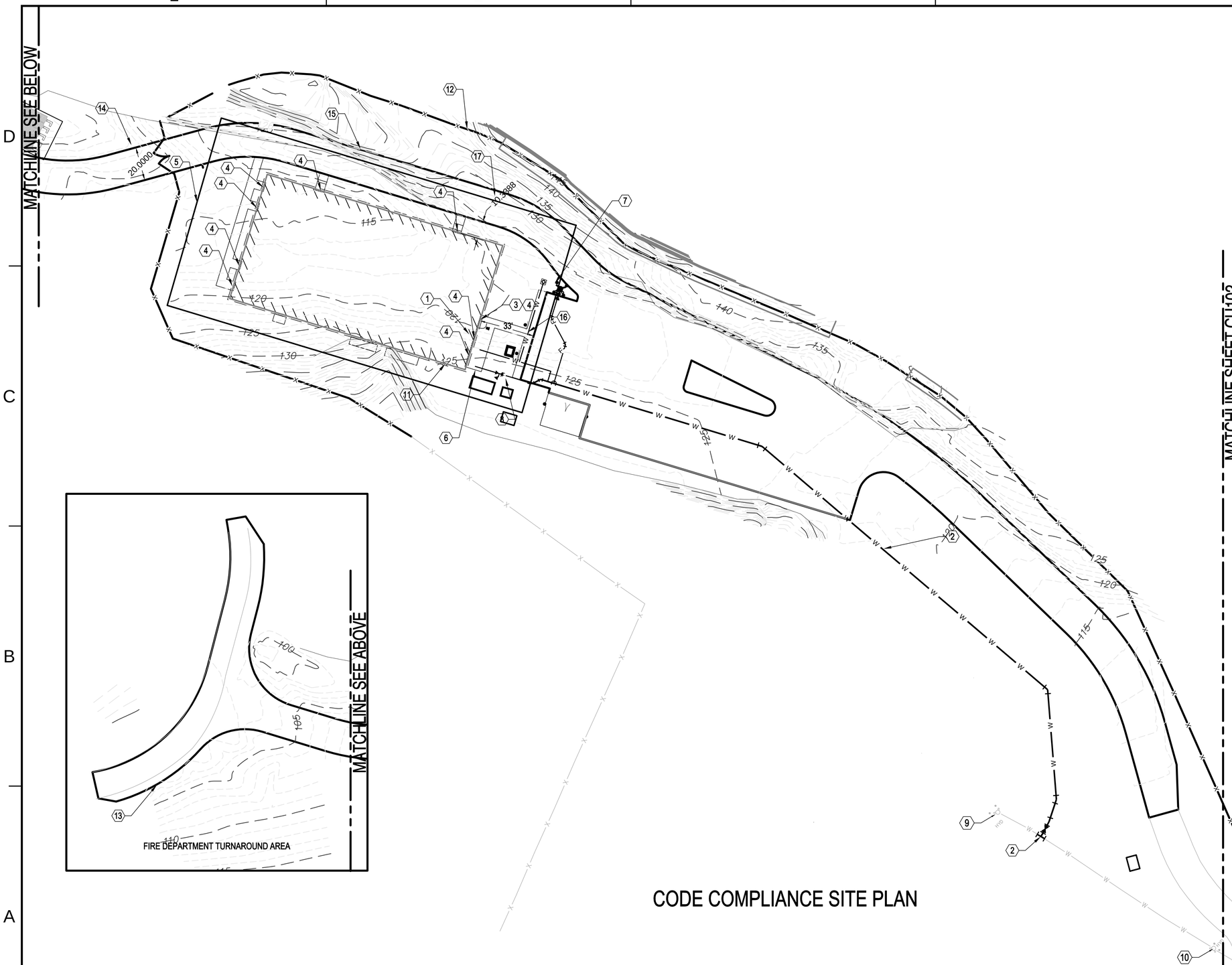

GENERAL SHEET NOTES

A. REFER TO SHEET C-001 FOR ADDITIONAL NOTES.

B. REFER TO ARCHITECTURAL PLANS FOR ALL BUILDING DIMENSIONS.

C. REFER TO SHEET CU101 FOR DETAILED UTILITY PLAN.

KEYED NOTES

1. FIRE ALARM/ MASS NOTIFICATION CONTROL PANEL (FMCP) LOCATION
2. 10" WATER MAIN
3. INTENDED MAIN FIRE DEPARTMENT ENTRANCE
4. EXIT DISCHARGE
5. ASSUMED PROPERTY LINE
6. INCOMING 6" WATER LINE
7. NEW FIRE HYDRANT
8. POST INDICATOR VALVE
9. EXISTING FIRE HYDRANT - FLOW HYDRANT 47
10. EXISTING FIRE HYDRANT - GAUGE HYDRANT 46
11. FIRE DEPARTMENT CONNECTION
12. CHAIN LINK FENCE
13. FIRE DEPARTMENT TURN- AROUND AREA
14. FIRE LANE WIDTH
15. FIRE DEPARTMENT VEHICLE ACCESS ROAD
16. DISTANCE FROM FIRE DEPARTMENT VEHICLE ACCESS TO MAIN FIRE DEPARTMENT ENTRANCE
17. CLOSEST DISTANCE FROM FIRE DEPARTMENT VEHICLE ACCESS TO ENTRANCE

KEYPLAN

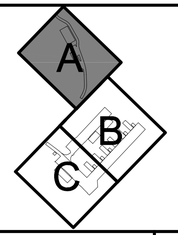

GRAPHIC SCALE

1"=30' 0' 30' 60'

PLAN NORTH

SYM	DESCRIPTION	DATE	APPR.

NAVFAC

STATE OF CONNECTICUT
JEFFREY C. McLAUGHLIN
No. 25368
LICENSED PROFESSIONAL ENGINEER
6/23/2025
SEAL

Jacobs
1100 NORTH GLEBE ROAD
SUITE 500
ARLINGTON, VIRGINIA 22201
571.218.1000
FAX: 571.218.1600

A/E INFO

APPROVED
FOR COMMANDER NAVFAC 8/14/2025

ACTIVITY
APPROVED BY LCDR ELIZABETH OLOKODE NAVFAC NLON FEAD DIRECTOR NEW LONDON, GROTON, CT

SATISFACTORY TO DATE 05/27/2025

DES JM | DRW CL | CHK JB
PM/DM SMS/CWJ
BRANCH MANAGER HPN
CHIEF ENG/ARCH JWJ
FIRE PROTECTION HPN

DEPARTMENT OF THE NAVY
NAVAL FACILITIES ENGINEERING SYSTEMS COMMAND
MID-ATLANTIC
NAVAL FACILITIES ENGINEERING SYSTEMS COMMAND - MID-ATLANTIC
NAVAL STATION - NORFOLK, VA
NAVAL SUBMARINE BASE NEW LONDON
GROTON, CONNECTICUT
P-1102 WEAPONS MAGAZINE & ORDNANCE OPERATIONS FACILITY
OPERATIONS
CODE COMPLIANCE SITE PLAN - AREA A

SCALE:
EPROJECT NO.: 1667770
CONSTR. CONTR. NO.
NAVFAC DRAWING NO. .12893955
SHEET 5 OF 140

G-103

DRAWFORM REVISION: 25 AUGUST 2020

FILE NAME: C:\pw_workdir\dms003\pg_wcodcj\d0919659\P1102_G-103.dwg LAYOUT NAME: G-103 CODE COMPLIANCE SITE PLAN PLOTTED: Friday, June 20, 2025 - 11:17am USER: wcodcj

GENERAL NOTES

1. ELEVATIONS NOTED ON THE STRUCTURAL DRAWINGS ARE RELATIVE TO TOP OF THE FIRST/GROUND FLOOR SLAB. SEE CIVIL DRAWINGS FOR THE ELEVATION OF THE FIRST/GROUND FLOOR RELATIVE TO MEAN SEA LEVEL.
2. DETAILS LABELED "TYPICAL DETAILS" OR DETAILS ON SHEETS WHERE THE TITLE INCLUDES "TYPICAL DETAILS" APPLY TO SITUATIONS THAT ARE THE SAME OR SIMILAR TO THOSE SPECIFICALLY DETAILED. SUCH DETAILS AND DIMENSIONS APPLY WHETHER OR NOT DETAILS ARE REFERENCED AT EACH LOCATION.
3. DETAILS NOT LABELED AS "TYPICAL" APPLY AT THE SPECIFIC LOCATIONS INDICATED AND OTHER SIMILAR CONDITIONS.
4. SLOPING DECK PLANES ARE USUALLY DEFINED BY A WORK POINT ELEVATION AND A SLOPE OR A HIGH AND LOW POINT ELEVATION. STEEL MEMBERS SUPPORTING A SLOPING DECK PLANE HAVE THEIR TOP OF STEEL COINCIDENT WITH THE BOTTOM OF DECK, UON.
5. DO NOT REPRODUCE THE STRUCTURAL DRAWINGS FOR USE AS SHOP DRAWINGS. SHOP DRAWINGS PREPARED IN SUCH A MANNER WILL BE REJECTED AND RETURNED WITHOUT REVIEW.

CODES AND STANDARDS

THE FOLLOWING CODES AND STANDARDS, AS MODIFIED BY THE REFERENCED UFC PUBLICATIONS, APPLY TO THE DESIGN AND CONSTRUCTION OF THIS PROJECT:

1. UFC 1-200-01, *DOD BUILDING CODE*, 1 SEPTEMBER 2022
2. UFC 3-301-01, *STRUCTURAL ENGINEERING*, CHANGE, 04 FEBRUARY 2022
3. UFC 4-010-01, *DOD MINIMUM ANTITERRORISM STANDARDS FOR BUILDINGS*, CHANGE 2 30 JULY 2022
4. ASCE 7-16, *MINIMUM DESIGN LOADS AND ASSOCIATED CRITERIA FOR BUILDINGS AND OTHER STRUCTURES*
5. IBC 2021, *INTERNATIONAL BUILDING CODE*
6. ACI 318-19, *BUILDING CODE REQUIREMENTS FOR STRUCTURAL CONCRETE*
7. AISC 303-16, *CODE OF STANDARD PRACTICE FOR STEEL BUILDINGS AND BRIDGES*
8. AISC 360-16, *SPECIFICATION FOR STRUCTURAL STEEL BUILDINGS*
9. RCSC 2020, *SPECIFICATION FOR STRUCTURAL JOINTS USING HIGH-STRENGTH BOLTS*
10. SJI 100-2020, *STANDARD SPECIFICATION FOR K-SERIES, LH-SERIES, DHL-SERIES OPEN WEB STEEL JOISTS AND FOR JOIST GIRDERS*
11. AWS D1.1-2020, *STRUCTURAL WELDING CODE - STEEL*
12. SDI RD-2017, *STANDARD FOR STEEL ROOF DECK*
13. NAVSEA OP5, *AMMUNITION AND EXPLOSIVES ASHORE SAFETY REGULATIONS FOR HANDLING, STORAGE, PRODUCTION, RENOVATION, & SHIPPING*

CONSTRUCTION REQUIREMENTS

1. REVIEW AND VERIFY EXISTING CONDITIONS AND DIMENSIONS PRIOR TO SUBMISSION OF SHOP DRAWINGS AND BEGINNING CONSTRUCTION.
2. CONFIRM ACTUAL EQUIPMENT DIMENSIONS USING APPROVED MANUFACTURER/ VENDOR DRAWINGS PRIOR TO SUBMISSION OF SHOP DRAWINGS.
3. DETERMINE AND COORDINATE THE SIZE & LOCATION OF CHASES, INSERTS, OPENINGS, SLEEVES, FINISHES, DEPRESSIONS, HOUSEKEEPING PADS, AND EQUIPMENT SUPPORTS (INCLUDING FOUNDATIONS) BEFORE SUBMITTING SHOP DRAWINGS.
4. SUBMIT DIMENSIONED SHOP DRAWINGS SHOWING THE LOCATION OF SLEEVES AND OPENINGS THROUGH MASONRY WALLS, STRUCTURAL STEEL MEMBERS AND CONCRETE ELEMENTS. OPENINGS THROUGH A STRUCTURAL MEMBER MUST BE SHOWN ON THE SAME DRAWING. DRAWINGS ORGANIZED BY DISCIPLINE OR SUB-CONTRACTOR ARE NOT ACCEPTABLE. OPENINGS NOT SHOWN ON THE SHOP DRAWINGS REQUIRE THE WRITTEN APPROVAL OF THE COR BEFORE INSTALLATION.
5. DO NOT FIELD CUT OR DRILL OPENINGS IN STRUCTURAL MEMBERS UNLESS INDICATED ON THE ACCEPTED SHOP DRAWINGS OR APPROVED BY THE COR.
6. REFER TO THE ARCHITECTURAL DRAWINGS FOR DETAILED INFORMATION REGARDING FINISHES, WATERPROOFING, NON-BEARING MASONRY PARTITIONS, ETC.
7. DO NOT SCALE DRAWINGS FOR THE PURPOSE OF ESTABLISHING DIMENSIONS.
8. D0 NOT CHANGE THE SIZE, DIMENSION OR POSITION OF STRUCTURAL ELEMENTS WITHOUT THE WRITTEN APPROVAL OF THE COR.
9. DO NOT STORE OR STACK CONSTRUCTION MATERIALS ON FLOORS OR ROOFS IN EXCESS OF 80 PERCENT OF INDICATED LIVE LOAD.
10. THE STRUCTURE IS DESIGNED TO BE STABLE IN THE COMPLETED CONDITION. PROVIDE BRACING AND SHORING TO MAINTAIN THE STABILITY OF THE STRUCTURE AND TO AVOID OVER-LOADING THE STRUCTURE DURING CONSTRUCTION. RETAIN A REGISTERED PROFESSIONAL OR STRUCTURAL ENGINEER TO DESIGN THE TEMPORARY SUPPORT SYSTEM AND ADVISE ON TEMPORARY LOADING CONDITIONS.

DELEGATED DESIGN

1. EXCAVATION, DEWATERING, AND EARTH RETENTION SYSTEMS
2. OPEN WEB STEEL JOISTS AND JOIST BRIDGING
3. SUPPLEMENTARY FRAMING TO SUPPORT PIPES, DUCTS, MECHANICAL EQUIPMENT, ELECTRICAL EQUIPMENT, ETC.
4. TEMPORARY SHORING AND BRACING
5. STRUCTURAL STEEL CONNECTIONS
6. ATFP BRACING
7. ARCHITECTURAL CANOPIES

ABBREVIATIONS

A	
ABV	ABOVE
ACI	AMERICAN CONCRETE INSTITUTE
ADDL	ADDITIONAL
ADJ	ADJACENT
AE	AIR ENTRAINED
AFF	ABOVE FINISHED FLOOR
AISC	AMERICAN INSTITUTE OF STEEL CONSTRUCTION
ALT	ALTERNATE
ANSI	AMERICAN NATIONAL STANDARDS INSTITUTE
APPROX	APPROXIMATE
AR	ANCHOR ROD
ARCH	ARCHITECT or ARCHITECTURAL
ASCE	AMERICAN SOCIETY OF CIVIL ENGINEERS
ASTM	AMERICAN SOCIETY FOR TESTING & MATERIALS
ATFP	ANTI TERRORISM/FORCE PROTECTION
AWS	AMERICAN WELDING SOCIETY
B	
B/ or BOT	BOTTOM
BF	BOTH FACES
BLDG	BUILDING
BM	BEAM
BOS	BOTTOM OF STEEL
BP	BEARING PLATE
BPL	BASE PLATE
BRDG	BRIDGING
BRG	BEARING
BS	BOTH SIDES
BTWN	BETWEEN
C	
℄	CENTERLINE
C/C	CENTER TO CENTER
CANT	CANTILEVER
CF	CUBIC FEET
CFMF	COLD-FORMED METAL FRAMING
CFRP	CARBON FIBER REINFORCED POLYMER
CIP	CAST-IN-PLACE
CJ	CONTRACTION / CONTROL JOINT
CJP	COMPLETE JOINT PENETRATION
CLR	CLEAR
CMU	CONCRETE MASONRY UNIT
CO	CLEAN OUT
COL	COLUMN
CONC	CONCRETE
CONT	CONTINUOUS
COORD	COORDINATE
COR	CONTRACTING OFFICER'S REPRESENTATIVE
CY	CUBIC YARD
D	
D	DEPTH
db	REINF BAR DIAMETER
DBA	DEFORMED BAR ANCHOR
DEMO	DEMOLITION
DIA OR Ø	DIAMETER
DIAG	DIAGONAL
DIM	DIMENSION
DL	DEAD LOAD
DN	DOWN
DWG(S)	DRAWING(S)
E	
(E)	EXISTING
EA	EACH
EE	EACH END
EF	EACH FACE
EJ	EXPANSION JOINT
EL	ELEVATION
ELEC	ELECTRIC or ELECTRICAL
ELEV	ELEVATOR
EMBED	EMBEDMENT
EOD	EDGE OF DECK
EOR	ENGINEER OF RECORD
EOS	EDGE OF SLAB
EQ	EQUAL
EQUIP	EQUIPMENT
ES	EACH SIDE
EW	EACH WAY
EXIST	EXISTING
EXP	EXPANSION
EXT	EXTERIOR
F	
FA	FALL ARREST ANCHOR
FD	FLOOR DRAIN
FDN	FOUNDATION
FIN	FINISH or FINISHED
FLG	FLANGE
FLR	FLOOR
FOW	FACE OF WALL
FP	FIRE PROTECTION
FRP	FIBER REINFORCED POLYMER
FT	FOOT or FEET
FTG	FOOTING
G	
GA	GAGE or GAUGE
GALV	GALVANIZED
GC	GENERAL CONTRACTOR
H	
H	HIGH OR HORIZONTAL
HK	HOOK
HORIZ	HORIZONTAL
HP	HIGH POINT
HS	HIGH STRENGTH
HT	HEIGHT
I	
ID	INSIDE DIAMETER
IF	INSIDE FACE
IN	INCH
INCL	INCLUDED
INFO	INFORMATION
INT	INTERIOR
IP	INFLECTION POINT
J	
JT	JOINT
JST	JOIST
K	
K	KIPS (1000 POUNDS)
KB	KNEE BRACE
KSF	KIPS PER SQUARE FOOT
KSI	KIPS PER SQUARE INCH
L	
LBS	POUND(S)
Ld	REINF BAR DEVELOPMENT LENGTH
LE	LEFT END
LL	LIVE LOAD
LLH	LONG LEG HORIZONTAL
LLV	LONG LEG VERTICAL
LP	LOW POINT
LTWT	LIGHT WEIGHT
M	
MAX	MAXIMUM
MC	MOMENT CONNECTION
MECH	MECHANICAL
MEP	MECHANICAL, ELECTRICAL AND PLUMBING
MID	MIDDLE
MIN	MINIMUM
MISC	MISCELLANEOUS
MO	MASONRY OPENING
MTL	METAL
MWFRS	MAIN WIND FORCE RESISTING SYSTEM
N	
NIC	NOT IN CONTRACT
NLWT	NORMAL WEIGHT
NOM	NOMINAL
No. or #	NUMBER
NTS	NOT TO SCALE
O	
OC	ON CENTER
OD	OUTSIDE DIAMETER
OF	OUTSIDE FACE
OPNG	OPENING
OPP	OPPOSITE OR OPPOSITE HAND
P	
PCF	POUNDS PER CUBIC FOOT
PEN	PENETRATION
PJP	PARTIAL JOINT PENETRATION
PL	PLATE
PLUMB	PLUMBING
PROJ	PROJECTION
PS	PRESTRESSED
PSF	POUNDS PER SQUARE FOOT
PSI	POUNDS PER SQUARE INCH
R	
R	RISER OR RADIUS
RE	RIGHT END
REBAR	REINFORCING STEEL BARS
REINF	REINFORCEMENT or REINFORCING
RTU	ROOF TOP UNIT
S	
SC	SLIP CRITICAL
SCHED	SCHEDULE
SDI	STEEL DECK INSTITUTE
SDL	SUPERIMPOSED DEAD LOAD
SHT	SHEET
SIM	SIMILAR
SJI	STEEL JOIST INSTITUTE
SFRS	SEISMIC FORCE RESISTING SYSTEM
SOG	SLAB-ON-GROUND
SQ	SQUARE
SS	STAINLESS STEEL
STD	STANDARD
STL	STEEL
STRUCT	STRUCTURAL
T	
T	TREAD
T/	TOP
TEMP	TEMPORARY
THK	THICK or THICKNESS
TMS	THE MASONRY SOCIETY
TOS	TOP OF STEEL
TYP	TYPICAL
U	
UON	UNLESS OTHERWISE NOTED
V	
V	VERTICAL
VERT	VERTICAL
VIF	VERIFY IN FIELD
W	
W	WIDTH
W/	WITH
W/CM	WATER-CEMENTITIOUS MATERIAL RATIO
W/O	WITHOUT
WD	WOOD
WP	WORK POINT
WT	WEIGHT
WWR	WELDED WIRE REINFORCING

GRAPHIC LEGEND

CONCRETE

STEEL

ROOF MECHANICAL EQUIPMENT

EXTENT OF SLAB-ON-GROUND OR 2-WAY SLAB

EXTENT OF FRAMED SLAB

FRAMED SLAB SPAN DIRECTION

[-X' - X"] INDICATES THE DIFFERENCE IN ELEVATION BETWEEN THE TOP OF THE FOUNDATION, PEDESTAL, SLAB, ROOF DECK OR BEAM AND THE TOP OF THE FIRST/GROUND FLOOR SLAB

X' - X" INDICATES ELEVATION AT LEVEL PLANE BASED ON THE TOP OF THE FIRST/GROUND FLOOR SLAB

KEYNOTE

STEEL BEAM LEGEND

V35 W12x22 C=1" V35

BEAM / GIRDER SIZE
BEAM CAMBER, NONE IF OMITTED
FACTORED VERTICAL SHEAR REACTION (KIPS), REFER TO GENERAL NOTES IF OMITTED

WALL FOOTING LEGEND

[X' - X"] [X' - X"]

T/ FTG ELEV
STEP IN FOOTING
T/FTG ELEV

NOTE: IF THE FTG ELEV IS OMITTED, REFER TO THE GENERAL SHEET NOTES

SYM	DESCRIPTION	DATE	APPR

NAVFAC

LAURA ARICO PRESLEY
REGISTERED ENGINEER
AGRICULTURE COMMERCE
No. 106382
STATE OF TENNESSEE
06/23/2025
SEAL

Jacobs
1100 NORTH GLEBE ROAD
SUITE 500
ARLINGTON, VIRGINIA 22201
571.218.1000
FAX: 571.218.1600

A/E INFO

APPROVED
FOR COMMANDER NAVFAC 8/14/2025

ACTIVITY
APPROVED BY LCDR ELIZABETH OLOKODE NAVFAC NLON FEAD DIRECTOR NEW LONDON, GROTON, CT

SATISFACTORY TO DATE 05/27/2025

DES	DRW	CHK
JH	JT	LP

PM/DM	SMS/CWJ
BRANCH MANAGER	NEK
CHIEF ENG/ARCH	JWJ
FIRE PROTECTION	HPN

DEPARTMENT OF THE NAVY
NAVAL FACILITIES ENGINEERING SYSTEMS COMMAND
MID-ATLANTIC
NAVAL FACILITIES ENGINEERING SYSTEMS COMMAND - MID-ATLANTIC
NAVAL STATION - NORFOLK, VA
NAVAL SUBMARINE BASE NEW LONDON
GROTON, CONNECTICUT
P-1102 WEAPONS MAGAZINE & ORDNANCE OPERATIONS FACILITY
OPERATIONS
GENERAL NOTES, ABBREVIATIONS & LEGEND

SCALE: AS NOTED
EPROJECT NO.: 1667770
CONSTR. CONTR. NO.
NAVFAC DRAWING NO. 12893956
SHEET 6 OF 140

S-001

6/20/2025 12:55:40 PM S-001
\\dc1vs01\Redp\PDZE1628\STRUB\LDG-1667770-S-BIM_v21.rvt

DESIGN CRITERIA & LOADS

SUPERIMPOSED DEAD & LIVE LOADS (UNFACTORED - PSF)	TYPICAL ROOF	ROOF ABOVE MECH AND ELEC ROOMS	ARMS ROOM CEILING SLAB	TYPICAL FLOOR	MECH AND ELEC ROOM FLOOR	ARMS ROOM FLOOR
ROOF MEMBRANE & INSULATION	5	5	----	-----	-----	-----
MEP	5	15	5	-----	-----	-----
CEILING	10	----	----	-----	-----	-----
HOUSEKEEPING PAD	-----	-----	----	-----	50	-----
1. TOTAL SDL	20	20	5	----	25	----
2. LIVE LOAD	20	20	125	100	125	150

3. BUILDING RISK CATEGORY — II
4. SNOW
   - a. SNOW IMPORTANCE FACTOR, Is — 1.0
   - b. GROUND SNOW LOAD, Pg — 30 PSF
   - c. TERRAIN ROUGHNESS — C
   - d. ROOF EXPOSURE FACTOR, Ce — 1.0 PARTIALLY EXPOSED
   - e. THERMAL FACTOR, Ct — 1.0
   - f. ROOF SLOPE FACTOR, Cs — 1.0
   - g. FLAT-ROOF SNOW LOAD, Pf — 21 PSF
   - h. MINIMUM UNIFORM SNOW LOAD, Pm — 20 PSF
   - i. DESIGN SNOW LOAD W/ DRIFT — REFER TO FIGURE 1
5. RAIN
   - a. INTENSITY, i — 2.75 IN/HR
   - b. RAIN LOAD, R — 11 PSF
6. WIND
   - a. ULTIMATE DESIGN WIND SPEED, V: — 128 MPH
   - b. ALLOWABLE STRESS WIND SPEED, Vasd: — 99 MPH
   - c. WIND EXPOSURE: — C
   - d. INTERNAL PRESSURE COEF, GCpi — ±0.18 ENCLOSED
   - e. MAIN WIND-FORCE RESISTING SYSTEM
     - 0 FT - ROOF — 31 PSF
     - PARAPET — 70 PSF
   - f. COMPONENTS & CLADDING — REFER TO TABLE 1
7. EARTHQUAKE
   - a. SEISMIC IMPORTANCE FACTOR — 1.0
   - b. SEISMIC SITE CLASSIFICATION — C
   - c. MAPPED SPECTRAL ACCELERATION
     - SHORT PERIOD, S_S — 0.190g
     - 1-SECOND PERIOD, S_1 — 0.052g
   - d. DESIGN SPECTRAL ACCELERATION
     - SHORT PERIOD, S_{DS} — 0.165g
     - 1-SECOND PERIOD, S_{D1} — 0.052g
   - e. SEISMIC DESIGN CATEGORY — A
   - f. MAIN BUILDING (EXTERIOR WALLS)
     - FORCE-RESISTING SYSTEM — ORDINARY REINFORCED CONCRETE SHEAR WALLS
     - RESPONSE MODIFICATION, R — 4
     - SYSTEM OVERSTRENGTH, Ω_0 — 2.5
     - DEFLECTION AMPLIFICATION, C_d — 4
     - ANALYSIS PROCEDURE — EQUIVALENT LATERAL FORCE
     - SEISMIC RESPONSE COEF, C_S — 0.041
     - SEISMIC WEIGHT, W — 435 KIPS
     - DESIGN BASE SHEAR — 18 KIPS
   - g. ARMS ROOM
     - FORCE-RESISTING SYSTEM — ORDINARY REINFORCED CONCRETE SHEAR WALLS
     - RESPONSE MODIFICATION, R — 4
     - SYSTEM OVERSTRENGTH, Ω_0 — 2.5
     - DEFLECTION AMPLIFICATION, C_d — 4
     - ANALYSIS PROCEDURE — EQUIVALENT LATERAL FORCE
     - SEISMIC RESPONSE COEF, C_S — 0.041
     - SEISMIC WEIGHT, W — 115 KIPS
     - DESIGN BASE SHEAR — 5 KIPS
8. FOUNDATIONS
   - a. MINIMUM SOIL BEARING CAPACITY — 4,000 PSF
   - b. FROST DEPTH — 38 IN

FIGURE 1 - DESIGN ROOF SNOW LOAD W/ DRIFT

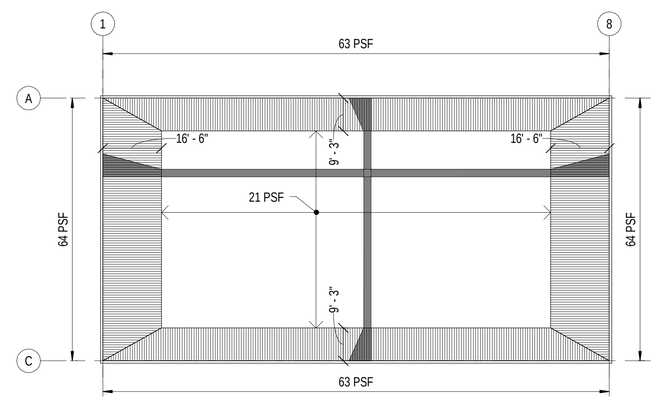

TABLE 1 - COMPONENTS & CLADDING WIND PRESSURE (PSF)

ZONE		EFFECTIVE WIND AREA (SF) ≤10	20	50	100	200	≥500
ROOF	1'	-34 / +16	-34 / +16	-34 / +16	-34 / +16	-29 / +16	-23 / +16
	1	-60 / +16	-56 / +16	-50 / +16	-46 / +16	-43 / +16	-37 / +16
	2	-79 / +16	-73 / +16	-67 / +16	-62 / +16	-57 / +16	-50 / +16
	3	-107 / +16	-97 / +16	-84 / +16	-73 / +16	-63 / +16	-50 / +16
WALLS	4w	-37 / +34	-36 / +33	-34 / +31	-32 / +29	-31 / +28	-29 / +26
	5w	-46 / +34	-43 / +33	-39 / +31	-36 / +29	-33 / +28	-29 / +26
PARAPET	4p	-81 / +35	-75 / +34	-69 / +32	-63 / +30	-58 / +28	-51 / +26
	5p	-110 / +35	-99 / +34	-86 / +32	-75 / +30	-65 / +28	-51 / +26

1. FOR MEMBERS, THE EFFECTIVE WIND AREA IS THE SPAN LENGTH MULTIPLIED BY THE WIDTH, WHERE THE WIDTH EQUALS THE GREATER OF THE WIDTH TRIBUTARY TO THE MEMBER OR 1/3 THE SPAN LENGTH.
2. FOR FASTENERS, THE EFFECTIVE WIND AREA MUST NOT BE TAKEN GREATER THAN THE AREA THAT IS TRIBUTARY TO AN INDIVIDUAL FASTENER.
3. PRESSURES INDICATED ARE THE TOTAL APPLIED WIND PRESSURE AND INCLUDE BOTH THE INTERNAL AND EXTERNAL PRESSURES.
4. WIND PRESSURES ARE FACTORED LOADS.
5. POSITIVE VALUES INDICATE PRESSURE ACTING TOWARDS THE SURFACE AND NEGATIVE VALUES INDICATE PRESSURE ACTING AWAY FROM THE SURFACE.

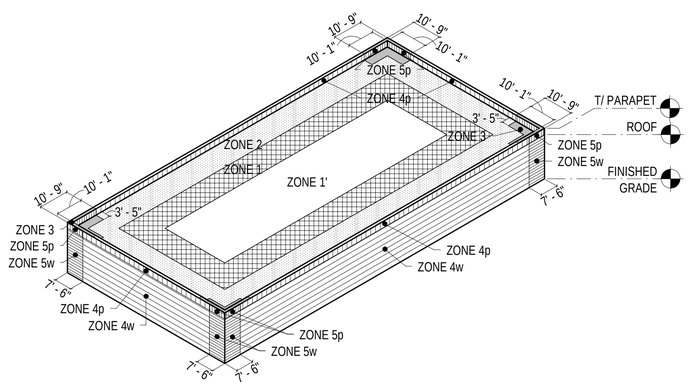

SYM	DESCRIPTION	DATE	APPR

NAVFAC

LAURA ARICO PRESLEY — REGISTERED ENGINEER — AGRICULTURE COMMERCE — No. 106363 — STATE OF TENNESSEE — 06/23/2025 — SEAL

Jacobs
1100 NORTH GLEBE ROAD
SUITE 500
ARLINGTON, VIRGINIA 22201
571.218.1000
FAX: 571.218.1600

A/E INFO

APPROVED — FOR COMMANDER NAVFAC — 8/14/2025

ACTIVITY: APPROVED BY LCDR ELIZABETH OLOKODE NAVFAC NLON FEAD DIRECTOR NEW LONDON, GROTON, CT

SATISFACTORY TO DATE 05/27/2025

DES	SK	DRW	SK	CHK	LP
PM/DM	SMS/CWJ				
BRANCH MANAGER	NEK				
CHIEF ENG/ARCH	JWJ				
FIRE PROTECTION	HPN				

DEPARTMENT OF THE NAVY
NAVAL FACILITIES ENGINEERING SYSTEMS COMMAND
MID-ATLANTIC
NAVAL FACILITIES ENGINEERING SYSTEMS COMMAND - MID-ATLANTIC
NAVAL STATION - NORFOLK, VA
NAVAL SUBMARINE BASE NEW LONDON
GROTON, CONNECTICUT
P-1102 WEAPONS MAGAZINE & ORDNANCE OPERATIONS FACILITY
OPERATIONS
DESIGN CRITERIA & LOADS

SCALE: AS NOTED
EPROJECT NO.: 1667770
CONSTR. CONTR. NO.
NAVFAC DRAWING NO. 12893957
SHEET 7 OF 140

S-002

6/21/2025 2:21:51 AM S-002
\\dc1vs01\Redp\PDZE1628\STRUB\LDG-1667770-S-BIM_v21.rvt

FOUNDATIONS AND EARTHWORK

1. FOUNDATION DESIGN IS IN ACCORDANCE WITH THE RECOMMENDATIONS OF THE GEOTECHNICAL ENGINEERING REPORT PREPARED BY JACOBS, DATED 07 FEBRUARY 2025.
2. PLACE FOUNDATIONS ON UNDISTURBED, NATURAL SUBGRADE OR BACKFILL COMPACTED TO A MINIMUM OF 95% OF THE MAXIMUM SOIL DENSITY AS MEASURED BY ASTM D1557, MODIFIED PROCTOR TEST. THE MINIMUM ALLOWABLE SOIL BEARING CAPACITY UNDER FOUNDATIONS MUST BE 4,000 PSF.
3. PROVIDE MEASURES TO PREVENT WATER, FROST OR ICE FROM PENETRATING FOOTING OR SLAB SUBGRADE BEFORE PLACING CONCRETE. FOOTINGS, MUD SLABS, OR BUILDING SLABS MUST NOT BE PLACED INTO OR AGAINST SUBGRADE CONTAINING FREE WATER, FROST, OR ICE.
4. CONCRETE FOUNDATIONS OR A 3" THICK CONCRETE MUD MAT (LEAN CONCRETE) MUST BE PLACED THE SAME DAY THE SUBGRADE IS INSPECTED. IF THE GROUND SURFACE IS DISTURBED BEFORE CONCRETE IS PLACED, THE SUBGRADE MUST BE RE-INSPECTED BY THE CONTRACTOR'S GEOTECHNICAL ENGINEER AT NO ADDITIONAL COST.
5. DESIGN, PROVIDE AND MAINTAIN DEWATERING SYSTEMS, EARTH RETENTION SYSTEMS, AND BRACING. PROTECT EXISTING STRUCTURES AND UTILITIES DURING CONSTRUCTION.
6. WHEN FILLING AGAINST OPPOSITE SIDES OF A WALL OR STRUCTURE, BACKFILL IN LIFTS THAT MAINTAIN LEVEL ELEVATIONS WITHIN 12" ON BOTH SIDES TO BALANCE THE LATERAL PRESSURE.
7. EARTHWORK, INCLUDING FOUNDATION SUBGRADE, FILL AND BACKFILL MUST BE INSPECTED AND APPROVED BY THE CONTRACTOR'S GEOTECHNICAL ENGINEER.
8. WHERE EXCAVATION WOULD BE BELOW A LINE EXTENDING UPWARD AT A 1.0 H TO 1.0 V SLOPE FROM THE BOTTOM OF A FOUNDATION OR UTILITY, PROVIDE SHEETING, SHORING, AND BRACING. DO NOT UNDERMINE EXISTING CONSTRUCTION.

CAST-IN-PLACE CONCRETE

1. PROVIDE CAST-IN-PLACE CONCRETE FOR EACH CLASS OF CONCRETE SHOWN IN TABLE 2 - CONCRETE MATERIAL SCHEDULE.
2. CONCRETE REINFORCING:
   a. TYPICAL DEFORMED BARS - ASTM A615, GRADE 60
   b. WELDED DEFORMED BAR ANCHORS - ASTM A706, GRADE 70
   c. PLAIN WELDED WIRE - ASTM A1064,GRADE 65, SUPPLIED IN FLAT SHEETS
3. CONCRETE COVER OVER STEEL REINFORCING, UON:
   a. REINFORCING IN CONCRETE CAST AGAINST & PERMANENTLY IN CONTACT WITH GROUND - 3"
   b. REINFORCING IN CONCRETE EXPOSED TO WEATHER OR IN CONTACT WITH GROUND AFTER CONCRETE PLACEMENT, INCLUDING ELEMENTS COVERED BY WATERPROOFING OR DAMPPROOFING
      - PRIMARY REINFORCING - 2"
      - STIRRUPS AND TIES - 1 1/2"
   c. REINFORCING IN CONCRETE SLABS AND WALLS NOT EXPOSED TO WEATHER OR IN CONTACT WITH GROUND - 3/4"
   d. REINFORCING IN CONCRETE BEAMS, GIRDERS, COLUMNS AND PEDESTALS NOT EXPOSED TO WEATHER OR IN CONTACT WITH GROUND, COVER TO - 1 1/2"
4. REFER TO TABLE 3 - CONCRETE REINFORCEMENT TENSION DEVELOPMENT LENGTHS FOR Ld.
5. SPLICE REINFORCING BARS PER ACI 318 WITH CLASS B TENSION LAP SPLICES (1.3 TIMES THE DEVELOPMENT LENGTH)
6. LAP SPLICE WWR SHEETS AT LEAST 8" AND TIE SECURELY.
7. DOWELS MUST MATCH SIZE AND SPACING AND BE CLASS B TENSION LAP SPLICED WITH THE MAIN REINFORCEMENT, UON.
8. FIELD BENDING OF REINFORCEMENT IS NOT PERMITTED UNLESS INDICATED ON THE DRAWINGS OR APPROVED IN WRITING BY THE COR. DO NOT HEAT REBAR WITH A TORCH IN THE FIELD.
9. EXCEPT FOR WELDED DEFORMED BAR ANCHORS, DO NOT WELD REINFORCING.
10. WIRE BRUSH, CLEAN, AND COAT CONSTRUCTION JOINTS WITH A BONDING AGENT OR MOISTEN WITH A CEMENT SLURRY SCRUBBED INTO THE JOINT IMMEDIATELY PRIOR TO PLACING FRESH CONCRETE.
11. CHAMFER EXPOSED CORNERS 3/4", UON.

POST-INSTALLED ANCHORS

1. ANCHORS AND INSERTS EXPOSED TO EARTH OR WEATHER MUST BE STAINLESS STEEL, UON. AT OTHER LOCATIONS PROVIDE GALVANIZED ANCHORS IN ACCORDANCE WITH ASTM A153. EMBEDDED DEFORMED REINFORCING BARS MUST BE UNCOATED STEEL.
2. PROVIDE TYPE & SIZE AS INDICATED & EMBED INTO THE EXISTING CONCRETE AS SHOWN IN TABLE 4 - POST-INSTALLED ANCHOR SCHEDULE. VERIFY MINIMUM EFFECTIVE EMBEDDMENT DEPTH WITH THE ANCHOR MANUFACTURER.
3. EXPANSION ANCHORS MUST BE WEDGE TYPE, TORQUE CONTROLLED.
4. ADHESIVE ANCHORS MUST CONSIST OF AN INSERT AND CARTRIDGE TYPE, TWO COMPONENT, EPOXY OR HYBRID ADHESIVE DISPENSED AND MIXED THROUGH A STATIC MIXING NOZZLE PROVIDED BY THE ADHESIVE MANUFACTURER.
5. ANCHORING TO CONCRETE:
   a. MECHANICAL ANCHORS USED IN CONCRETE MUST HAVE BEEN TESTED AND QUALIFIED FOR PERFORMANCE IN CRACKED AND UNCRACKED CONCRETE IN ACCORDANCE WITH ACI 355.2.
   b. ADHESIVE ANCHORS MUST HAVE BEEN TESTED AND QUALIFIED FOR PERFORMANCE IN CRACKED AND UNCRACKED CONCRETE, INCLUDING HORIZONTAL AND OVERHEAD INSTALLATIONS, AND LONG TERM CREEP IN ACCORDANCE WITH ACI 355.4.
6. IDENTIFY POSITION OF REINFORCING STEEL AND OTHER EMBEDDED ITEMS PRIOR TO DRILLING HOLES FOR ANCHORS. EXERCISE CARE IN DRILLING TO AVOID DAMAGING EXISTING REINFORCING OR EMBEDDED ITEMS. NOTIFY THE COR IF REINFORCING STEEL OR OTHER EMBEDDED ITEMS ARE ENCOUNTERED DURING DRILLING.
7. PROVIDE ANCHORS IN DRY HAMMER DRILLED HOLES IN ACCORDANCE WITH MANUFACTURER'S PRINTED INSTRUCTIONS.

OPEN WEB STEEL JOISTS

1. JOIST DESIGN, FABRICATION, AND ERECTION OF OPEN WEB STEEL JOISTS MUST BE PERFORMED IN ACCORDANCE WITH THE STEEL JOIST INSTITUTE, LATEST EDITION.
2. ALL BRIDGING, INCLUDING SIZING, SPACING CONNECTIONS, MUST BE DESIGNED BY JOIST DESIGNER IN ACCORDANCE WITH STEEL JOIST INSTITUTE REQUIREMENTS TO RESIST UPLIFT LOADING INDICATED ON DRAWINGS.
3. REFER TO S-102 FOR JOIST LAYOUT AND SHEET S-601 LOADING/DEPTH REQUIREMENTS TO BE USED IN DESIGN OF THE DELEGATED OPEN WEB STEEL JOISTS.
4. REFER TO S-505 FOR TYPICAL JOIST DETAILS INCLUDING END CONNECTION INFORMATION AND CHORD REINFORCEMENT REQUIREMENTS AT CONCENTRATED LOADING.
5. DO NOT CUT HOLES OR NOTCHES IN CHORD AND WEB MEMBERS, UNLESS APPROVED BY JOIST DESIGNER AND COR.
6. DO NOT APPLY TEMPORARY OR PERMANENT LOADS TO JOIST BRIDGING.
7. SHOP DRAWINGS FOR JOISTS AND JOIST ACCESSORIES TO BE PREPARED BY THE JOIST MANUFACTURER'S DETAILS.
8. SUBMIT DESIGN CALCULATIONS FOR REVIEW IN ACCORDANCE WITH THE STEEL JOIST INSTITUTE DESIGN STANDARDS. SUBMIT DESIGN CALCUALTIONS SIGNED AND SEALED BY A PROFESSIONAL LICENSED ENGINEER IN THE STATE WHERE THE PROJECT IS LOCATED.

STRUCTURAL & MISCELLANEOUS STEEL

1. STRUCTURAL STEEL MUST CONFORM TO THE FOLLOWING, UON:
   a. W & WT SHAPES — ASTM A992
   b. ANGLES & CHANNELS — ASTM 572, GR 50
   c. PLATES & BARS — ASTM 572, GR 50
   d. HSS — ASTM A500, GRADE C
   e. ANCHOR RODS — ASTM F1554, GRADE 36
   f. HIGH STRENGTH BOLTS — ASTM F3125, GRADE A325
   g. TENSION-CONTROL HS BOLTS TYPE 1 — ASTM F3125, GRADE F1852,
   h. DIRECT TENSION INDICATORS — ASTM F959, TYPE 325-1
   i. COMMON GRADE BOLTS — ASTM A307, GRADE A
   j. WELDING ELECTRODES — E70xx
2. GROUT UNDER STEEL BEARING PLATES MUST HAVE A MINIMUM 28 DAY COMPRESSIVE STRENGTH OF 7,000 PSI.
3. FILLET WELDS MUST HAVE A MINIMUM SIZE OF 1/4", UON. INCREASE THE EFFECTIVE THROAT OF THE WELD TO MAINTAIN THE WELD SIZE WHEN PARTS JOINED BY FILLET WELDS ARE SEPARATED. THE ROOT OPENING MUST NOT EXCEED 3/16".
4. BOLTED CONNECTIONS MUST HAVE A MINIMUM OF (2) 3/4" DIAMETER HIGH STRENGTH BOLTS.
5. MEMBERS EXPOSED TO WEATHER MUST BE HOT DIPPED GALVANIZED.
6. PROVIDE ZINC COATED (GALVANIZED) BOLTS, NUTS, AND WASHERS TO CONNECT GALVANIZED STEEL MEMBERS.
7. HIGH STRENGTH BOLTED CONNECTIONS MUST BE PRETENSIONED. CONNECTIONS THAT USE OVERSIZE HOLES OR SLOTTED HOLES IN THE DIRECTION OF THE LOAD MUST BE SLIP CRITICAL.
8. PROVIDE STEEL TO STEEL CONNECTIONS IN ACCORDANCE WITH AISC 360-16. CONNECTIONS NOT SPECIFICALLY DETAILED ON THE DRAWINGS MUST BE DESIGNED BASED ON A BEAM END REACTION OBTAINED FROM THE MAXIMUM UNIFORM LOAD TABLES IN PART 3 (DESIGN OF FLEXURAL MEMBERS). THE END REACTION IS EQUAL TO 1/2 THE TOTAL ALLOWABLE LOAD FOR THE GIVEN BEAM, SPAN AND GRADE OF STEEL SPECIFIED. DETAILED CONNECTIONS ON THE DRAWINGS SUPERCEDE THIS NOTE.
9. DO NOT FIELD CUT STRUCTURAL STEEL MEMBERS WITHOUT THE WRITTEN APPROVAL OF THE COR.
10. DO NOT SPLICE STEEL MEMBERS EXCEPT WHERE SPECIFICALLY DETAILED ON THE DRAWINGS.
11. PROVIDE TEMPORARY SHORING AND BRACING UNTIL THE STRUCTURE IS ALIGNED AND PERMANENT CONNECTIONS HAVE BEEN COMPLETED.

STEEL DECKING

1. ROOF DECK:
   a. CONFORM TO THE REQUIREMENTS OF ASTM A653, Fy = 50 KSI MIN, GALVANIZED G90.
   b. STEEL ROOF DECK MUST BE 1 1/2" HIGH, 20 GAUGE. DECK DESIGN IS BASED ON A THREE SPAN CONDITION. INCREASE DECK THICKNESS IF LESS THAN THREE SPAN CONDITION OR CONSTRUCTION LIVE LOAD EXCEEDS 20 PSF.
   c. THE DECK MUST HAVE THE FOLLOWING MINIMUM PROPERTIES PER FOOT WIDTH:
      $I_p = 0.201\ IN^4$ $I_n = 0.222$ $S_p = 0.234\ IN^3$ $S_n = 0.247\ IN^3$
2. DECK ENDS MUST BEAR AT LEAST 1 1/2" ON STRUCTURAL SUPPORTS. END JOINTS MUST BE BUTTED.
3. CONTINUOUS SHEET METAL CLOSURES ARE REQUIRED AT OPENINGS AND EDGES.
4. ROOF DECK FASTENING:
   a. FASTEN DECK TO EACH SUPPORT WITH 5/8" DIAMETER PUDDLE WELDS. WELD EDGE RIBS OF PANELS AND PROVIDE ADDITIONAL WELDS AT MAXIMUM 12" ON CENTER.
   b. FASTEN SIDE LAPS WITH #10 SELF DRILLING SCREWS AT THE LESSER OF 1/2 OF THE SPAN OR 36" ON CENTER, UON.
   c. FASTEN DECK EDGES TO PERIMETER SIDE SUPPORTS WITH #10 SELF DRILLING SCREWS AT THE LESSER OF 1/2 OF THE SPAN OR 24" ON CENTER, UON.
   d. SECURE DECK ACCESSORIES, SUCH AS CLOSURES AND RIDGE PLATES IN ACCORDANCE WITH SDI STANDARD PRACTICE. FASTENER SPACING MUST NOT EXCEED 12-INCHES.
5. LOADS HUNG FROM DECKING MUST NOT EXCEED 50 POUNDS. PIPES, DUCTS AND EQUIPMENT BENEATH ROOF DECKS MUST BE SUPPORTED BY THE STRUCTURAL STEEL, STEEL JOISTS OR SUPPLEMENTARY MEMBERS THAT ARE DIRECTLY SUPPORTED BY THE STEEL FRAMING. DESIGN AND PROVIDE SUPPLEMENTARY MEMBERS AT NO ADDITIONAL COST.

TABLE 2 - CONCRETE MATERIAL SCHEDULE (NORMAL WEIGHT)

ELEMENT	f'c	MAX W/CM RATIO	DRY UNIT WEIGHT	MAX AGGREGATE SIZE	ASTM C33 AGGREGATE CLASS	AIR CONTENT	SLUMP (NOTE 1)	MAXIMUM CHLORIDE CONTENT
FOUNDATIONS	4,500 PSI	0.45	145 PCF	3/4"	4S	5%	4"/8"	0.15%
LEAN CONCRETE FILL	1,000 PSI	--------	145 PCF	3/4"	4S	--------	--------	0.15%
INTERIOR SOG	4,000 PSI	0.55	145 PCF	1 1/2"	4S	3% MAX	4"/8"	0.15%
ARMS ROOM ROOF & WALLS	4,000 PSI	0.55	145 PCF	3/4"	4S	3% MAX	4"/8"	0.15%
OTHER WALLS	4,000 PSI	0.45	145 PCF	3/4"	4S	5%	4"/8"	0.15%

1. MAXIMUM SLUMP OF CONCRETE AT POINT OF PLACEMENT - WITHOUT / WITH HIGH-RANGE WATER-REDUCING ADMIXTURE
2. REFER TO CIVIL FOR CONCRETE SITE WALLS

TABLE 3 - CONCRETE REINF TENSION DEVELOPMENT LENGTHS (INCHES)

BAR SIZE	4,000 PSI					4,500 PSI				
	UNCOATED BARS					UNCOATED BARS				
	Ld				Ldh	Ld				Ldh
	TOP BARS		OTHER BARS		HOOKED BARS	TOP BARS		OTHER BARS		HOOKED BARS
	CASE 1	CASE 2	CASE 1	CASE 2		CASE 1	CASE 2	CASE 1	CASE 2	
#3	19	28	15	22	8	18	27	14	21	7
#4	25	37	19	29	10	24	35	18	27	9
#5	31	47	24	36	12	30	44	23	34	12
#6	37	56	29	43	15	35	53	27	41	14

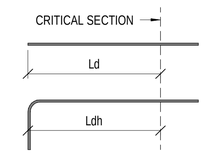

1. TOP BARS ARE DEFINED AS HORIZONTAL REINFORCING WHERE MORE THAN 12" OF FRESH CONCRETE IS CAST BENEATH THE BAR.
2. Ld = THE STRAIGHT BAR DEVELOPMENT LENGTH
3. Ldh = THE HOOKED BAR DEVELOPMENT LENGTH
4. CASE 1: CLEAR SPACING OF BARS DEVELOPED OR SPLICED NOT LESS THAN db, CLEAR COVER NOT LESS THAN db, AND STIRRUPS OR TIES THROUGHOUT Ld NOT LESS THAN THE CODE MINIMUM **OR** CLEAR SPACING OF BARS BEING DEVELOPED OR SPLICED NOT LESS THAN 2*db AND CLEAR COVER NOT LESS THAN db
5. CASE 2: REINFORCING BARS THAT DO NOT MEET THE REQUIREMENTS OF CASE 1
6. DEVELOPMENT LENGTHS ONLY APPLY TO THE OPPERATIONS AND SENTRY CONSTRUCTION.

TABLE 4 - POST-INSTALLED ANCHOR SCHEDULE

ANCHORING TO NORMAL WEIGHT CONCRETE

ANCHOR TYPE	ANCHOR DIAMETER/ REBAR SIZE	MINIMUM EFFECTIVE EMBEDMENT, UON	ULTIMATE DESIGN SHEAR CAPACITY (KIP)	ULTIMATE DESIGN TENSILE CAPACITY (KIP)
MECHANICAL	1/2"	3 1/4"	8.4	4.4
	5/8"	4"	13.1	6.6
	3/4"	4 3/4"	19	8.9
ADHESIVE	1/2"	2 3/4"	8.6	3.5
	3/4"	4"	20.4	8.3

SYM	DESCRIPTION	DATE	APPR

NAVFAC

LAURA ARICO PRESLEY — REGISTERED ENGINEER — AGRICULTURE — COMMERCE — No. 106383 — STATE OF TENNESSEE — 06/23/2025 — SEAL

Jacobs
1100 NORTH GLEBE ROAD
SUITE 500
ARLINGTON, VIRGINIA 22201
571.218.1000
FAX: 571.218.1600

A/E INFO

APPROVED — FOR COMMANDER NAVFAC — 8/14/2025

ACTIVITY: APPROVED BY LCDR ELIZABETH OLOKODE NAVFAC NLON FEAD DIRECTOR NEW LONDON, GROTON, CT

SATISFACTORY TO DATE 05/27/2025

DES JH	DRW JT	CHK LP	
PM/DM	SMS/CWJ		
BRANCH MANAGER	NEK		
CHIEF ENG/ARCH	JWJ		
FIRE PROTECTION	HPN		

DEPARTMENT OF THE NAVY
NAVAL FACILITIES ENGINEERING SYSTEMS COMMAND
MID-ATLANTIC
NAVAL FACILITIES ENGINEERING SYSTEMS COMMAND - MID-ATLANTIC
NAVAL STATION - NORFOLK, VA
NAVAL SUBMARINE BASE NEW LONDON
GROTON, CONNECTICUT
P-1102 WEAPONS MAGAZINE & ORDNANCE OPERATIONS FACILITY
OPERATIONS
MATERIAL NOTES

SCALE: AS NOTED
EPROJECT NO.: 1667770
CONSTR. CONTR. NO.
NAVFAC DRAWING NO. 12893958
SHEET 8 OF 140

S-003

6/20/2025 12:55:55 PM S-003
\\ad.jacobs.com\ds\Projects\PDZE\16281STRUKBLDG-1667770-S-BIM_v21.rvt

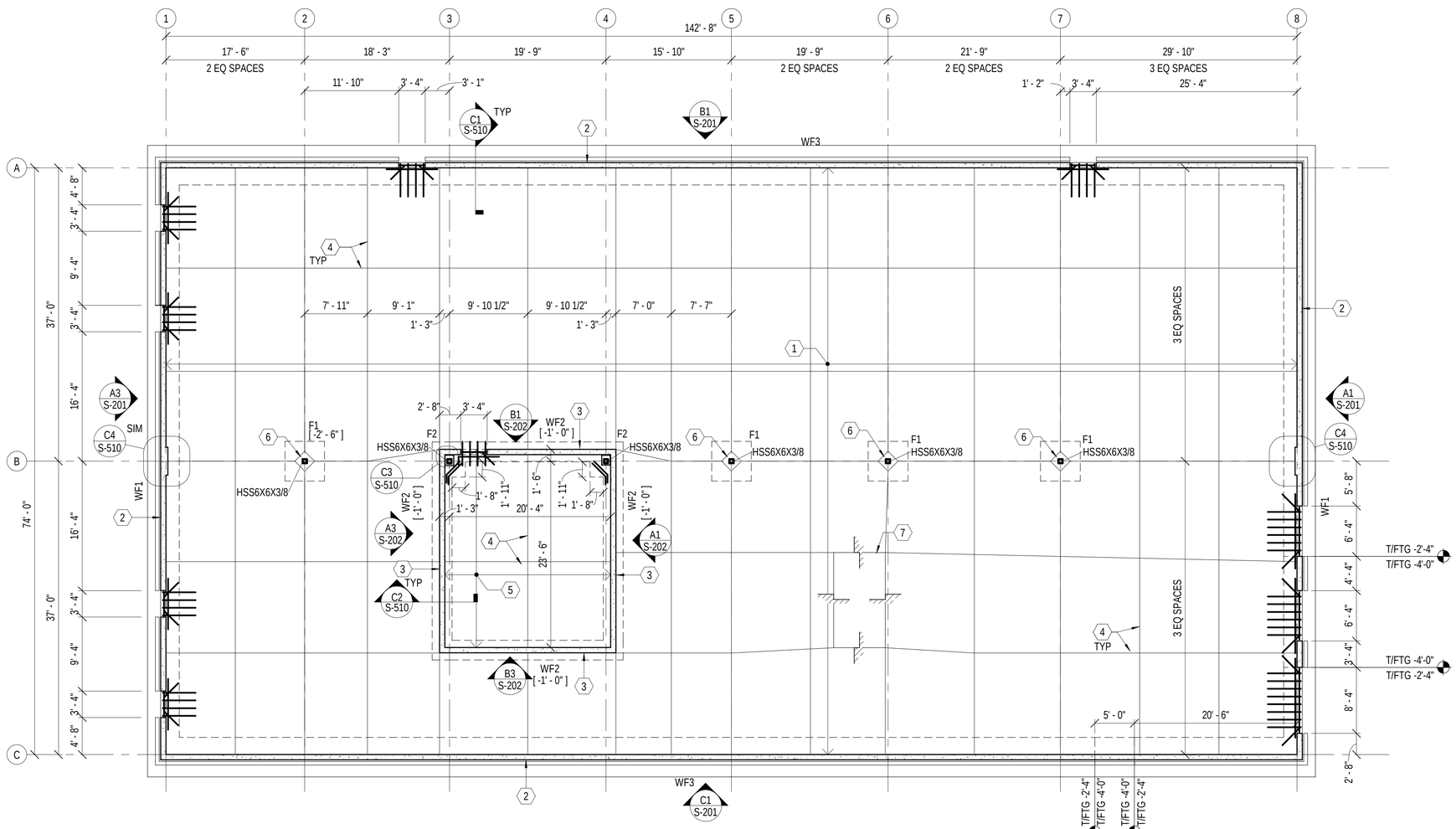

A1 FOUNDATION & SLAB PLAN

1/8" = 1'-0"

GENERAL SHEET NOTES

A. TOP OF FIRST FLOOR SLAB, REFERENCE DATUM, IS ELEVATION 0'-0". REFER TO CIVIL FOR THE ACTUAL FLOOR ELEVATION.

B. T/WALL FTG EL = [-2'-4"] UON.

C. T/COL FTG EL = [-1'-0"] UON.

D. REFER TO S-000 SERIES DRAWINGS FOR GENERAL NOTES, DESIGN LOADS AND ABBREVIATIONS.

E. REFER TO S-500 SERIES DRAWINGS FOR TYPICAL DETAILS.

F. "Fx" REFERS TO SPREAD FOOTING TYPE FOUNDATIONS AND "WFx" CONTINUOUS TYPE WALL FOUNDATIONS. REFER TO S-601 GEOMETRY AND REINFORCEMENT INFORMATION.

G. FOUNDATIONS MUST BE CENTERED ON ELEMENT BEING SUPPORTED UNLESS NOTED OTHERWISE.

H. REFER TO S-601 FOR SCHEDULES.

J. REFER TO PLUMBING DRAWINGS FOR RADON REMEDIATION.

SHEET KEYNOTES

1 6" THICK SLAB-ON-GROUND W/ #4 @ 10" OC EW

2 EXTERIOR WALLS: 8" CAST-IN-PLACE CONCRETE WALL W/ #5@10" EW CENTERED IN WALL

3 ARMS ROOM WALLS: 8" CONCRETE WALL W/ #4 @ 9" EW EF STAGGER EF @ 4 1/2"

4 SLAB-ON-GROUND CONTRACTION OR CONSTRUCTION JOINT

5 6" THICK SLAB-ON-GROUND W/ #4 @ 10" OC EW

6 COLUMN ISOLATION JOINT

7 SLAB DEPRESSION FOR HIGH DENSITY FILING SYSTEM, SEE INTERIORS, COORD SIZE AND LOCATION OF DEPRESSION WITH SELECTED MANUFACTURER PRIOR TO CASTING OF SLAB-ON-GRADE

SYM	DESCRIPTION	DATE	APPR

NAVFAC

LAURA ARICO PRESLEY
REGISTERED ENGINEER
AGRICULTURE
COMMERCE
No. 106363
STATE OF TENNESSEE
06/23/2025
SEAL

Jacobs
1100 NORTH GLEBE ROAD
SUITE 500
ARLINGTON, VIRGINIA 22201
571.218.1000
FAX: 571.218.1600

A/E INFO

APPROVED
FOR COMMANDER NAVFAC 8/14/2025

ACTIVITY
APPROVED BY LCDR ELIZABETH OLOKODE NAVFAC NLON FEAD DIRECTOR NEW LONDON, GROTON, CT

SATISFACTORY TO DATE 05/27/2025

DES	JH	DRW	JT	CHK	LP

PMDM	SMS/CWJ
BRANCH MANAGER	NEK
CHIEF ENG/ARCH	JWJ
FIRE PROTECTION	HPN

DEPARTMENT OF THE NAVY
NAVAL FACILITIES ENGINEERING SYSTEMS COMMAND
MID-ATLANTIC
NAVAL FACILITIES ENGINEERING SYSTEMS COMMAND - MID-ATLANTIC
NAVAL STATION - NORFOLK, VA
NAVAL SUBMARINE BASE NEW LONDON
GROTON, CONNECTICUT
P-1102 WEAPONS MAGAZINE & ORDNANCE OPERATIONS FACILITY
OPERATIONS
FOUNDATION & GROUND FLOOR PLAN

SCALE: AS NOTED
EPROJECT NO.: 1667770
CONSTR. CONTR. NO.
NAVFAC DRAWING NO. 12893959
SHEET 9 OF 140

S-101

PLAN NORTH

0 4' 8' 16' 24'
1/8" = 1'-0"

6/20/2025 12:56:01 PM S-101
\\DL-1vs01\Revit\PROJECTS\BLDG-1667770-S-BIM_v21.rvt

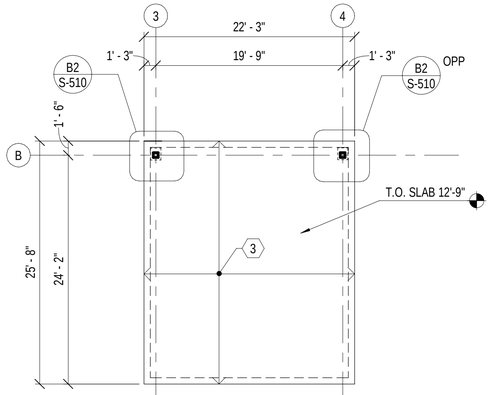

C2 ARMS ROOM CEILING FRAMING PLAN
1/8" = 1'-0"

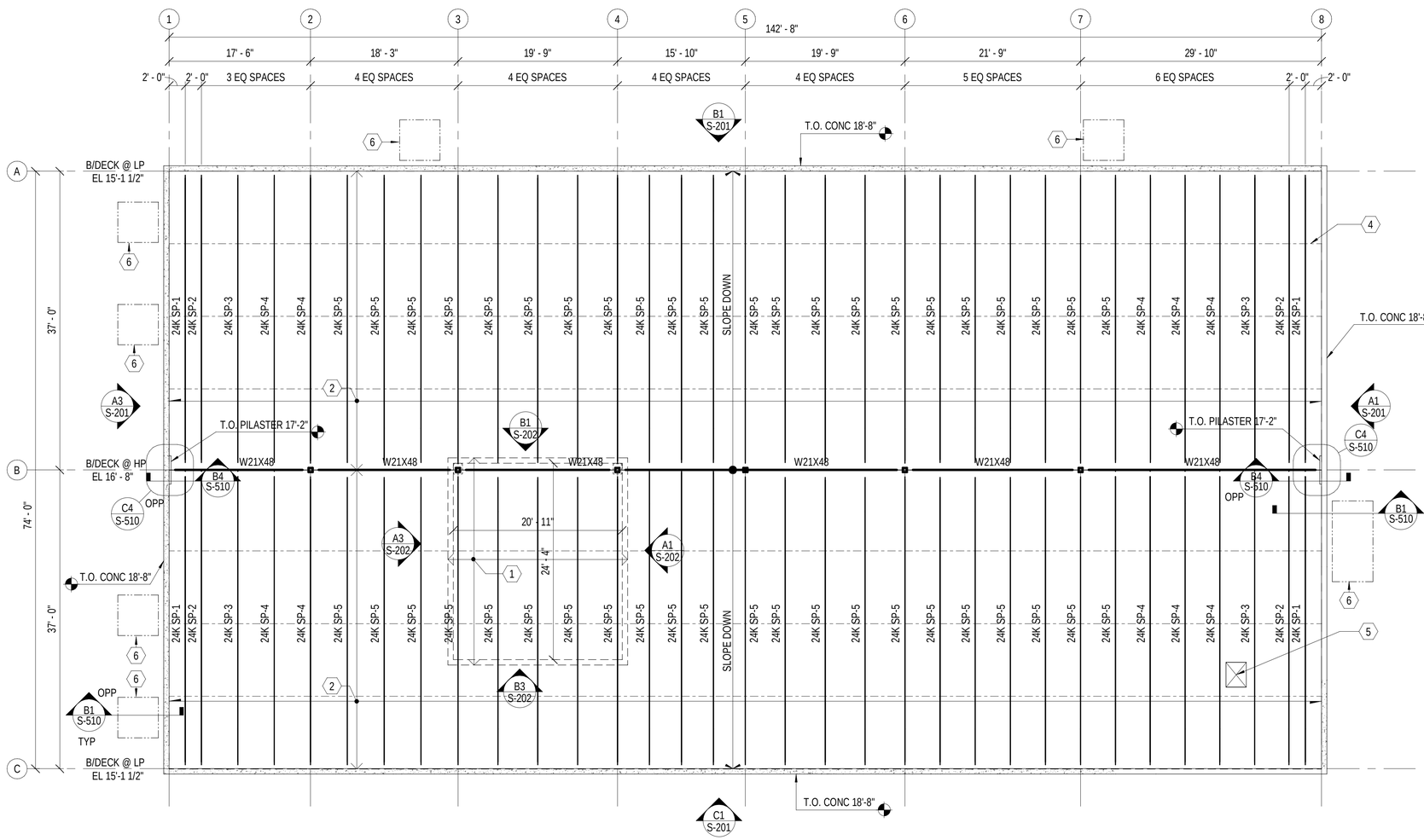

A1 ROOF FRAMING PLAN
1/8" = 1'-0"

GENERAL SHEET NOTES

A. TOP OF JOIST ELEVATION IS BOTTOM OF DECK ELEVATION AS INDICATED ON THE PLAN UON.

B. REFER TO S-000 SERIES DRAWINGS FOR GENERAL NOTES, DESIGN LOADS AND ABBREVIATIONS.

C. REFER TO S-500 SERIES DRAWINGS FOR TYPICAL DETAILS.

D. REFER TO FOUNDATION PLAN FOR COLUMN SIZES AND CONCRETE WALL THICKNESS AND REINFORCING.

E. REFER TO S-601 FOR SCHEDULES.

SHEET KEYNOTES

1 ARMS ROOM CEILING, SEE C2/S-102

2 1 1/2" STEEL ROOF DECK

3 9" CONC SLAB W/ #5 @ 10" OC EW EF

4 JOIST BRIDGING

5 ROOF ACCESS OPENING, REFER TO C2/S-504 FOR ADDITIONAL FRAMING, COORD LOCATION WITH ARCH

6 CANOPY, SEE ARCH

0 4' 8' 16' 24'
1/8" = 1'-0"

PLAN NORTH

SYM	DESCRIPTION	DATE	APPR

NAVFAC

LAURA ARICO PRESLEY
REGISTERED ENGINEER
AGRICULTURE
COMMERCE
No. 106363
STATE OF TENNESSEE
06/23/2025
SEAL

Jacobs
1100 NORTH GLEBE ROAD
SUITE 500
ARLINGTON, VIRGINIA 22201
571.218.1000
FAX: 571.218.1600

AE INFO

APPROVED
FOR COMMANDER NAVFAC 8/14/2025

ACTIVITY
APPROVED BY LCDR ELIZABETH OLOKODE NAVFAC NLON FEAD DIRECTOR NEW LONDON, GROTON, CT

SATISFACTORY TO DATE 05/27/2025

DES	JH	DRW	JT	CHK	LP

PM/DM	SMS/CWJ
BRANCH MANAGER	NEK
CHIEF ENG/ARCH	JWJ
FIRE PROTECTION	HPN

DEPARTMENT OF THE NAVY
NAVAL FACILITIES ENGINEERING SYSTEMS COMMAND - MID-ATLANTIC
NAVAL FACILITIES ENGINEERING SYSTEMS COMMAND
MID-ATLANTIC
NAVAL STATION - NORFOLK, VA
NAVAL SUBMARINE BASE NEW LONDON
GROTON, CONNECTICUT
P-1102 WEAPONS MAGAZINE & ORDNANCE OPERATIONS FACILITY
OPERATIONS
ROOF FRAMING PLANS

SCALE: AS NOTED
EPROJECT NO.: 1667770
CONSTR. CONTR. NO.
NAVFAC DRAWING NO. 12893960
SHEET 10 OF 140

S-102

6/20/2025 12:56:08 PM
S-102
\\dc1vs01\Redp\PDZE1628\STRUB\LDG-1667770-S-BIM_v21.rvt

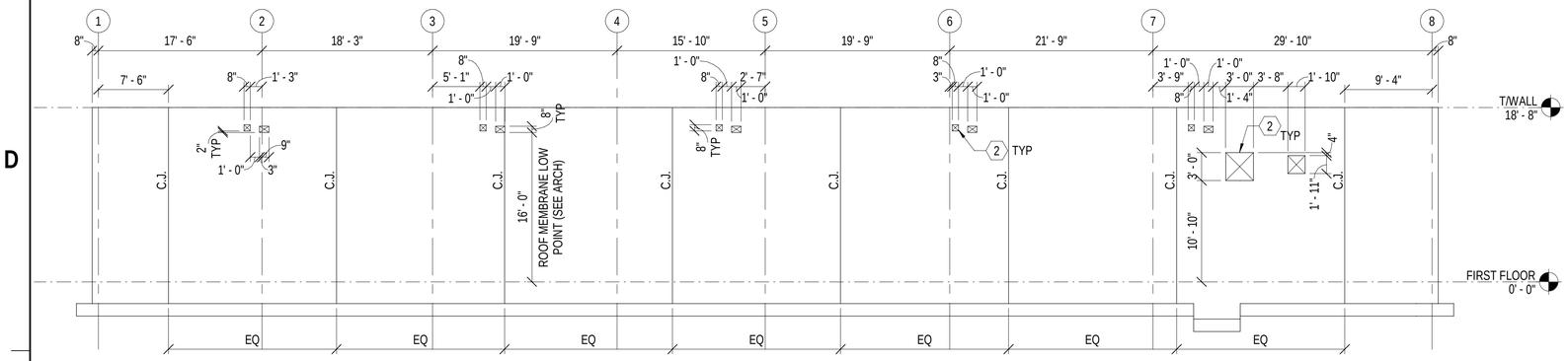

NOTES:
1. C.J. INDICATES CONTROL JOINT LOCATIONS. AT CONTRACTOR'S OPTION, CONSTRUCTION JOINT MAY BE USED IN LIEU OF CONTROL JOINT AT INDICATED LOCATIONS. REFER TO S-503 FOR CONTROL JOINT INFORMATION.

C1 SOUTH ELEVATION
1/8" = 1'-0"

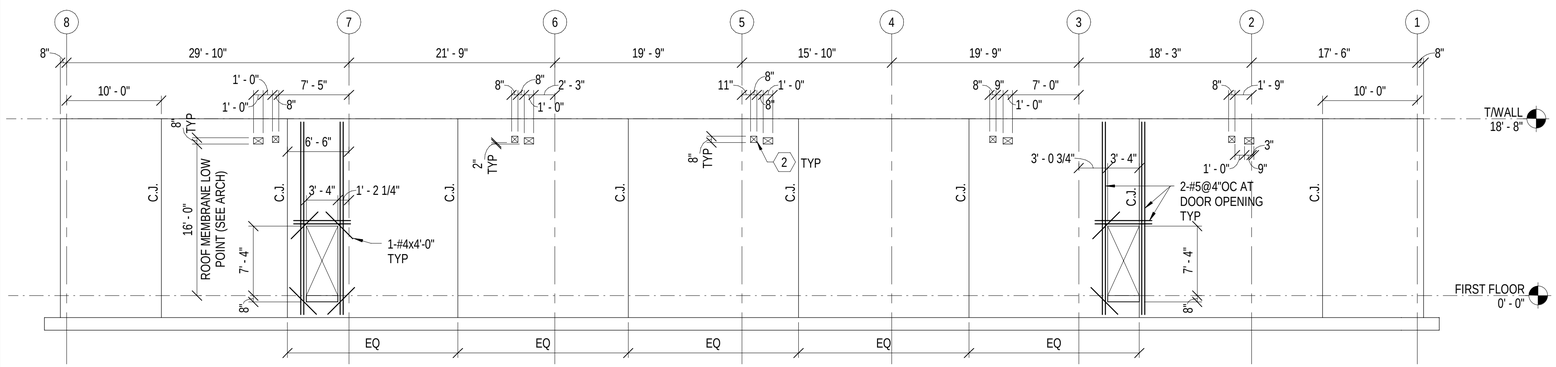

NOTES:
1. C.J. INDICATES CONTROL JOINT LOCATIONS. AT CONTRACTOR'S OPTION, CONSTRUCTION JOINT MAY BE USED IN LIEU OF CONTROL JOINT AT INDICATED LOCATIONS. REFER TO S-503 FOR CONTROL JOINT INFORMATION.

B1 NORTH ELEVATION
1/8" = 1'-0"

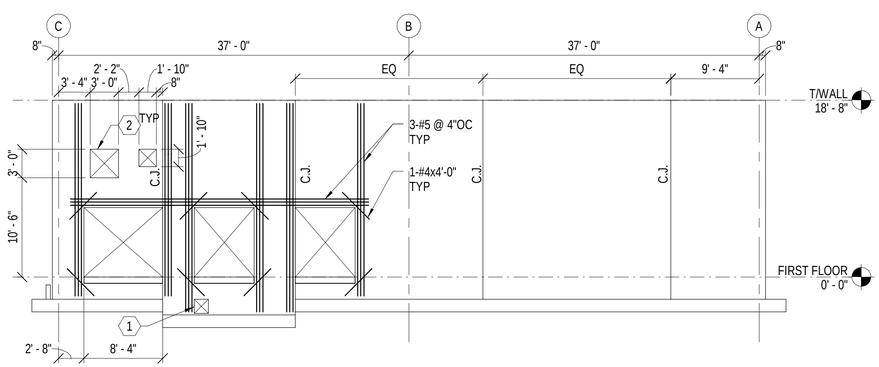

NOTES:
1. C.J. INDICATES CONTROL JOINT LOCATIONS. AT CONTRACTOR'S OPTION, CONSTRUCTION JOINT MAY BE USED IN LIEU OF CONTROL JOINT AT INDICATED LOCATIONS. REFER TO S-503 FOR CONTROL JOINT INFORMATION.

A1 EAST ELEVATION
1/8" = 1'-0"

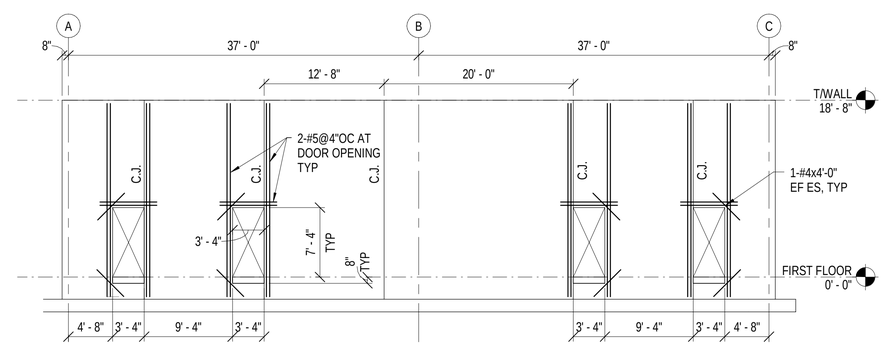

NOTES:
1. C.J. INDICATES CONTROL JOINT LOCATIONS. AT CONTRACTOR'S OPTION, CONSTRUCTION JOINT MAY BE USED IN LIEU OF CONTROL JOINT AT INDICATED LOCATIONS. REFER TO S-503 FOR CONTROL JOINT INFORMATION.

A3 WEST ELEVATION
1/8" = 1'-0"

0 4' 8' 16' 24'
1/8" = 1'-0"

GENERAL SHEET NOTES

A. TOP OF FIRST FLOOR SLAB, REFERENCE DATUM, IS ELEVATION 0'-0". REFER TO CIVIL FOR THE ACTUAL FLOOR ELEVATION.

B. REFER TO S-000 SERIES DRAWINGS FOR GENERAL NOTES, DESIGN LOADS AND ABBREVIATIONS.

C. REFER TO S-500 SERIES DRAWINGS FOR TYPICAL DETAILS.

SHEET KEYNOTES

1 OPENING FOR ELECTRICAL DUCT BANK, COORDINATE SIZE AND LOCATION WITH ELECTRICAL. REFER TO B3/S-503 FOR ADDITIONAL REINF

2 REFER TO B3/S-503 FOR ADDITIONAL REINF AT WALL PENETRATIONS

SYM	DESCRIPTION	DATE	APPR

NAVFAC

LAURA ARICO PRESLEY, REGISTERED ENGINEER, No. 106381, STATE OF TENNESSEE, AGRICULTURE, COMMERCE
06/27/2025
SEAL

Jacobs
1100 NORTH GLEBE ROAD
SUITE 500
ARLINGTON, VIRGINIA 22201
571.218.1000
FAX: 571.218.1600

A/E INFO

APPROVED
FOR COMMANDER NAVFAC
ACTIVITY
APPROVED BY LCDR ELIZABETH OLOKODE NAVFAC NLON FEAD DIRECTOR NEW LONDON, GROTON, CT
SATISFACTORY TO DATE 05/27/2025

DES	DRW	CHK
JH	JT	LP

PM/DM	SMS/CWJ
BRANCH MANAGER	NEK
CHIEF ENG/ARCH	JWJ
FIRE PROTECTION	HPN

DEPARTMENT OF THE NAVY
NAVAL FACILITIES ENGINEERING SYSTEMS COMMAND
NAVAL FACILITIES ENGINEERING SYSTEMS COMMAND - MID-ATLANTIC
MID-ATLANTIC
NAVAL STATION - NORFOLK, VA
NAVAL SUBMARINE BASE NEW LONDON
GROTON, CONNECTICUT
P-1102 WEAPONS MAGAZINE & ORDNANCE OPERATIONS FACILITY
OPERATIONS
BUILDING ELEVATIONS

SCALE: AS NOTED
EPROJECT NO.: 1667770
CONSTR. CONTR. NO.
NAVFAC DRAWING NO.
12893961
SHEET 11 OF 140
S-201

6/20/2025 12:56:15 PM S-201
\\bk1-v901\Bldg\PD\ZE1929\STRUB\LDG S-1667770-S-BIM_v21.rvt

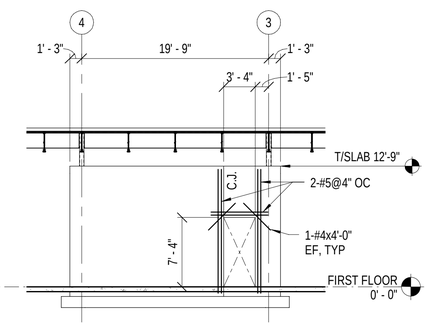

NOTES:
1. C.J. INDICATES CONTROL JOINT LOCATIONS. AT CONTRACTOR'S OPTION, CONSTRUCTION JOINT MAY BE USED IN LIEU OF CONTROL JOINT AT INDICATED LOCATIONS. REFER TO S-503 FOR CONTROL JOINT INFORMATION.

B1 ARMS ROOM - NORTH ELEVATION
1/8" = 1'-0"

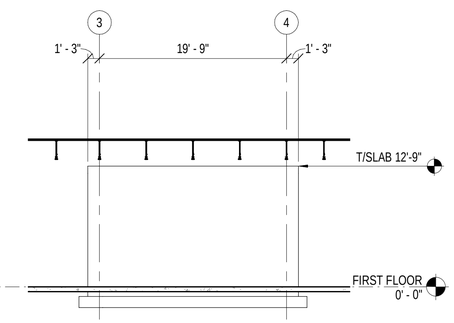

NOTES:
1. C.J. INDICATES CONTROL JOINT LOCATIONS. AT CONTRACTOR'S OPTION, CONSTRUCTION JOINT MAY BE USED IN LIEU OF CONTROL JOINT AT INDICATED LOCATIONS. REFER TO S-503 FOR CONTROL JOINT INFORMATION.

B3 ARMS ROOM - SOUTH ELEVATION
1/8" = 1'-0"

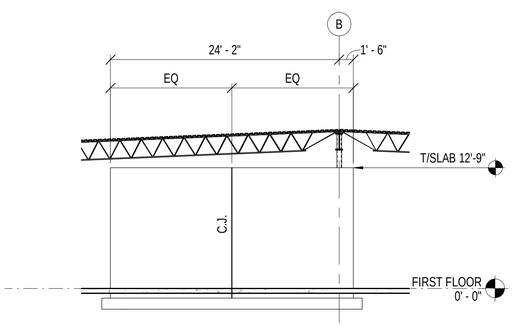

NOTES:
1. C.J. INDICATES CONTROL JOINT LOCATIONS. AT CONTRACTOR'S OPTION, CONSTRUCTION JOINT MAY BE USED IN LIEU OF CONTROL JOINT AT INDICATED LOCATIONS. REFER TO S-503 FOR CONTROL JOINT INFORMATION.

A1 ARMS ROOM - EAST ELEVATION
1/8" = 1'-0"

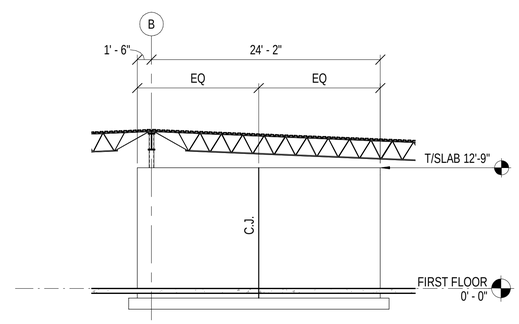

NOTES:
1. C.J. INDICATES CONTROL JOINT LOCATIONS. AT CONTRACTOR'S OPTION, CONSTRUCTION JOINT MAY BE USED IN LIEU OF CONTROL JOINT AT INDICATED LOCATIONS. REFER TO S-503 FOR CONTROL JOINT INFORMATION.

A3 ARMS ROOM - WEST ELEVATION
1/8" = 1'-0"

GENERAL SHEET NOTES

A. TOP OF FIRST FLOOR SLAB, REFERENCE DATUM, IS ELEVATION 0'-0". REFER TO CIVIL FOR THE ACTUAL FLOOR ELEVATION.

B. T/WALL FTG EL = [-2'-4"] UON.

C. T/COL FTG EL = [-1'-0"] UON.

D. REFER TO S-000 SERIES DRAWINGS FOR GENERAL NOTES, DESIGN LOADS AND ABBREVIATIONS.

E. REFER TO S-500 SERIES DRAWINGS FOR TYPICAL DETAILS.

F. "Fx" REFERS TO SPREAD FOOTING TYPE FOUNDATIONS AND "WFx" CONTINUOUS TYPE WALL FOUNDATIONS. REFER TO S-601 GEOMETRY AND REINFORCEMENT INFORMATION.

G. FOUNDATIONS MUST BE CENTERED ON ELEMENT BEING SUPPORTED UNLESS NOTED OTHERWISE.

H. REFER TO S-601 FOR SCHEDULES.

SHEET KEYNOTES

0 4' 8' 16' 24'
1/8" = 1'-0"

SYM	DESCRIPTION	DATE	APPR

NAVFAC

LAURA ARICO PRESLEY
REGISTERED ENGINEER
AGRICULTURE
COMMERCE
No. 106382
STATE OF TENNESSEE
06/27/2025
SEAL

Jacobs
1100 NORTH GLEBE ROAD
SUITE 500
ARLINGTON, VIRGINIA 22201
571.218.1000
FAX: 571.218.1600
A/E INFO

APPROVED
FOR COMMANDER NAVFAC 8/14/2025

ACTIVITY
APPROVED BY LCDR ELIZABETH OLOKODE NAVFAC NLON FEAD DIRECTOR NEW LONDON, GROTON, CT

SATISFACTORY TO DATE	05/27/2025
DES JH	DRW JT CHK LP
PM/DM	SMS/CWJ
BRANCH MANAGER	NEK
CHIEF ENG/ARCH	JWJ
FIRE PROTECTION	HPN

DEPARTMENT OF THE NAVY
NAVAL FACILITIES ENGINEERING SYSTEMS COMMAND
MID-ATLANTIC
NAVAL FACILITIES ENGINEERING SYSTEMS COMMAND - MID-ATLANTIC
NAVAL STATION - NORFOLK, VA
NAVAL SUBMARINE BASE NEW LONDON
GROTON, CONNECTICUT
P-1102 WEAPONS MAGAZINE & ORDNANCE OPERATIONS FACILITY
OPERATIONS
BUILDING ELEVATIONS

SCALE: AS NOTED
EPROJECT NO.: 1667770
CONSTR. CONTR. NO.
NAVFAC DRAWING NO. 12893962
SHEET 12 OF 140
S-202

6/20/2025 12:56:20 PM S-202
\\ad.jacobs.com\ds\Projects\PD2E1028\STRUCTURAL\BLDG-1667770-S-BIM_v21.rvt

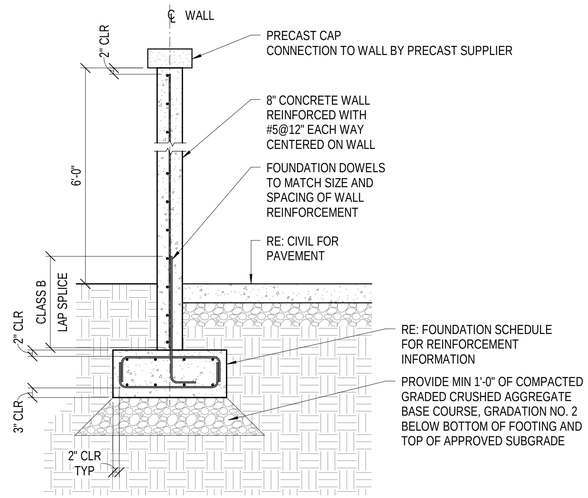

C2 DUMPSTER ENCLOSURE SECTION

NTS

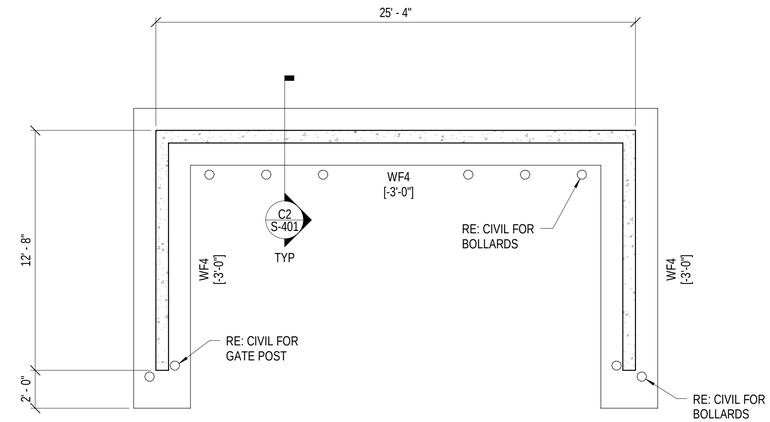

NOTES:
1. REFER TO CIVIL DRAWINGS FOR DUMPSTER ENCLOSURE LOCATION.
2. "WFx" REFERS TO CONTINUOUS TYPE WALL FOUNDATIONS. REFER TO S-601 FOR GEOMETRY AND REINFORCEMENT INFORMATION.

C4 DUMPSTER ENCLOSURE PLAN

1/4" = 1'-0"

0 2' 4' 8' 12'
1/4" = 1'-0"

SYM	DESCRIPTION	DATE	APPR

NAVFAC

LAURA ARICO PRESLEY
REGISTERED ENGINEER
AGRICULTURE
COMMERCE
No. 106383
STATE OF TENNESSEE
06/23/2025
SEAL

Jacobs
1100 NORTH GLEBE ROAD
SUITE 500
ARLINGTON, VIRGINIA 22201
571.218.1000
FAX: 571.218.1600

A/E INFO

APPROVED
FOR COMMANDER NAVFAC 8/14/2025

ACTIVITY
APPROVED BY LCDR ELIZABETH
OLOKODE NAVFAC NLON FEAD
DIRECTOR NEW LONDON, GROTON, CT

SATISFACTORY TO DATE 05/27/2025

DES	JH	DRW	JT	CHK	LP

PM/DM	SMS/CWJ
BRANCH MANAGER	NEK
CHIEF ENG/ARCH	JWJ
FIRE PROTECTION	HPN

DEPARTMENT OF THE NAVY
NAVAL FACILITIES ENGINEERING SYSTEMS COMMAND
MID-ATLANTIC
NAVAL FACILITIES ENGINEERING SYSTEMS COMMAND - MID-ATLANTIC
NAVAL STATION - NORFOLK, VA
NAVAL SUBMARINE BASE NEW LONDON
GROTON, CONNECTICUT
P-1102 WEAPONS MAGAZINE & ORDNANCE OPERATIONS FACILITY
OPERATIONS
DUMPSTER ENCLOSURE

SCALE: AS NOTED
EPROJECT NO.: 1667770
CONSTR. CONTR. NO.
NAVFAC DRAWING NO.
12893963
SHEET 13 OF 140
S-401

6/20/2025 12:56:24 PM S-401
\\bk-1v-001\Revit\PROJECTS\1667770-S-BIM_v21.rvt

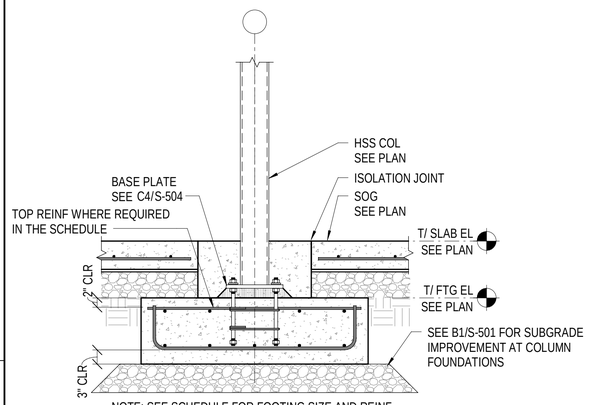

NOTE: SEE SCHEDULE FOR FOOTING SIZE AND REINF

C1 SPREAD FOOTING
NTS

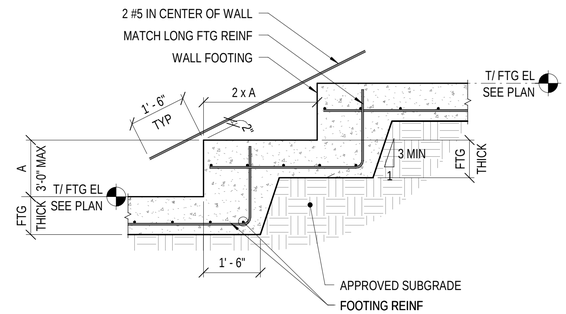

C2 STEPPED WALL FOOTING
NTS

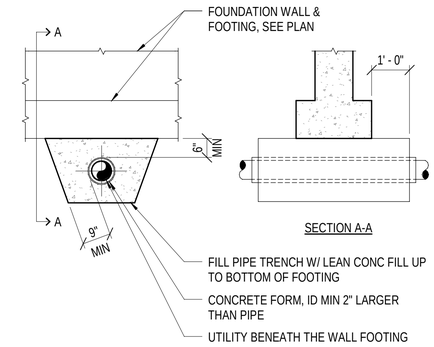

C4 PIPE BENEATH WALL FOOTING
NTS

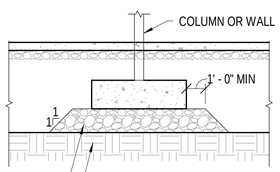

APPROVED STABLE NATURAL SOIL

PROVIDE MIN 1'-0" OF COMPACTED GRADED CRUSHED AGGREGATE BASE COURSE, GRADATION NO. 2 BELOW BOTTOM OF FOOTING AND TOP OF APPROVED SUBGRADE

B1 FOOTING ON ROCK SUBGRADE
NTS

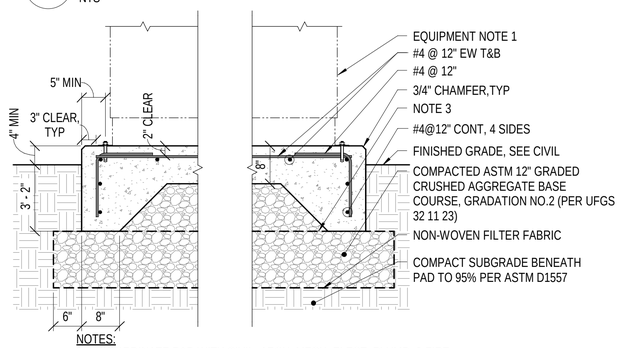

NOTES:
1. COORDINATE PAD WITH CIVIL, ARCH, MECH, ELECT, PLUMB, & FIRE PROTECT DRAWINGS AND EQUIPMENT MANUFACTURER'S REQUIREMENTS
2. DO NOT FABRICATE REINFORCING, EXCAVATE, OR POUR CONCRETE UNTIL EQUIPMENT SHOP DRAWINGS HAVE BEEN APPROVED.
3. AT CONTRACTOR'S OPTION, PAD MAY BE POURED SOLID 3'-2" BELOW FINISHED GRADE, PROVIDE TOP AND BOTTOM LAYER OF #6@12" EACH WAY IN LIEU OF #4@12" EW FOR THIS OPTION.

B2 EXTERIOR EQUIPMENT PAD
NTS

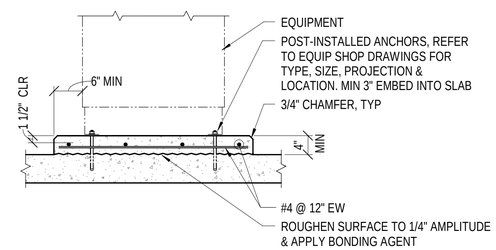

NOTES:
1. COORDINATE PAD WITH ARCH, MECH, ELECT, PLUMB & FIRE PROTECT DRAWINGS AND EQUIP MANUFACTURER'S REQUIREMENTS.
2. SLAB REINF NOT SHOWN
3. DO NOT FABRICATE REINFORCING, EXCAVATE, OR POUR CONCRETE UNTIL EQUIPMENT SHOP DRAWINGS HAVE BEEN APPROVED

B3 INTERIOR EQUIPMENT PAD DETAIL
NTS

SYM	DESCRIPTION	DATE	APPR

NAVFAC

LAURA ARICO PRESLEY
REGISTERED ENGINEER
AGRICULTURE
COMMERCE
No. 106363
STATE OF TENNESSEE
06/27/2025
SEAL

Jacobs
1100 NORTH GLEBE ROAD
SUITE 500
ARLINGTON, VIRGINIA 22201
571.218.1000
FAX: 571.218.1600

AE INFO

APPROVED
FOR COMMANDER NAVFAC 06/27/2025
ACTIVITY
APPROVED BY LCDR ELIZABETH
OLOKODE NAVFAC NLON FEAD
DIRECTOR NEW LONDON, GROTON, CT
SATISFACTORY TO DATE 05/27/2025

DES	JH	DRW JT	CHK LP
PM/DM			SMS/CWJ
BRANCH MANAGER			NEK
CHIEF ENG/ARCH			JWJ
FIRE PROTECTION			HPN

DEPARTMENT OF THE NAVY
NAVAL FACILITIES ENGINEERING SYSTEMS COMMAND
NAVAL FACILITIES ENGINEERING SYSTEMS COMMAND - MID-ATLANTIC
MID-ATLANTIC
NAVAL STATION - NORFOLK, VA
NAVAL SUBMARINE BASE NEW LONDON
GROTON, CONNECTICUT
P-1102 WEAPONS MAGAZINE & ORDNANCE OPERATIONS FACILITY
OPERATIONS
TYPICAL FOUNDATION & CONCRETE DETAILS

SCALE: AS NOTED
EPROJECT NO.: 1667770
CONSTR. CONTR. NO.
NAVFAC DRAWING NO.
12893964
SHEET 14 OF 140
S-501

6/20/2025 12:56:29 PM S-501
\\AL1vs01\Hdsp\FPDZE1\929\STRU\BLDG 1667770-S-BIM_v21.rvt

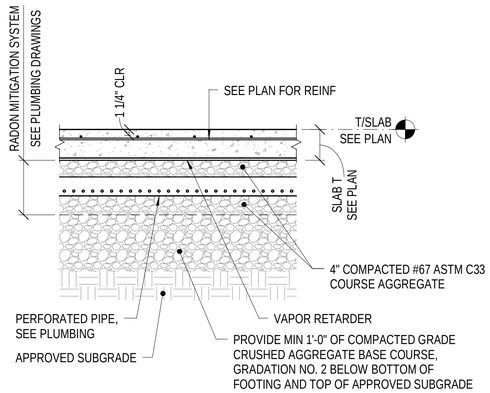

NOTE: #67 ASTM C33 CRUSHED STONE BELOW SLAB MUST HAVE MAXIMUM PASSING 3% PASSING THE NO. 200 SIEVE

C1 SLAB-ON-GROUND
NTS

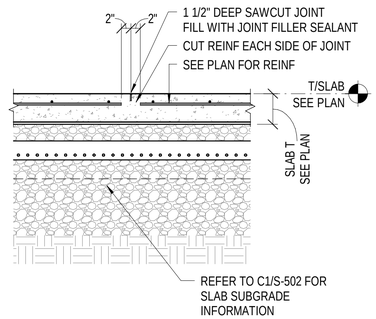

C2 SLAB-ON-GROUND CONTRACTION JOINT
NTS

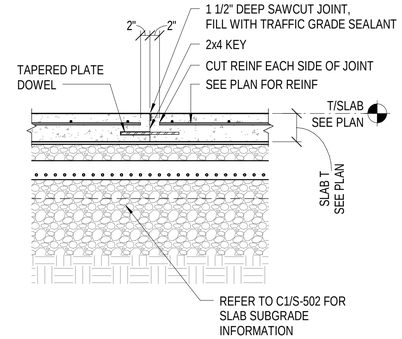

C3 SLAB-ON-GROUND CONSTRUCTION JOINT
NTS

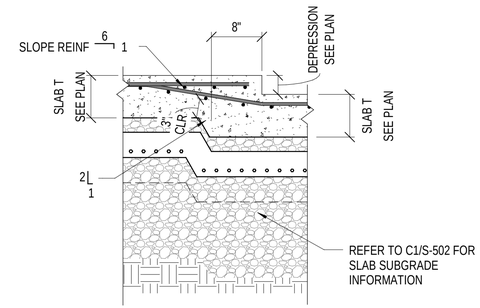

NOTES:
1. COORDINATE DEPTH AND LOCATION OF FLOOR DEPRESSIONS WITH ARCH AND INTERIOR DRAWINGS AND FINISH REQUIREMENTS
2. PROVIDE (1)-#4x4'-0" DIAGONAL BARS PLACED AT MID-DEPTH OF SLAB AT RE-ENTRANT CORNERS
3. PROVIDE CORNER BARS (2'-0"x2'-0" LEGS) OF THE SAME BAR SIZE FOR BARS WHICH CANNOT DEVELOP STRAIGHT INTO THE ADJACENT SLAB AT THEIR TERMINATIONS

C4 SLAB-ON-GROUND DEPRESSION
NTS

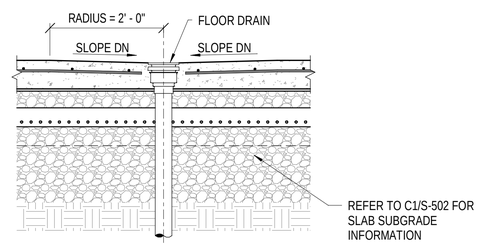

NOTE: SEE ARCH, MECH, ELEC, AND PLUMB FOR DRAIN SIZE, TYPE, AND LOCATION

B2 SLAB-ON-GROUND FLOOR DRAIN
NTS

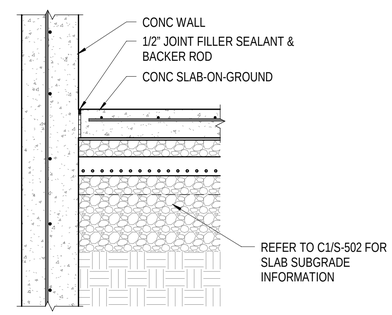

B3 ISOLATION JOINT @ WALLS
NTS

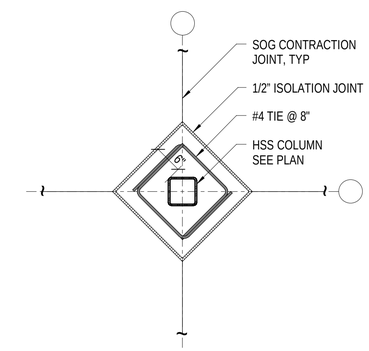

B4 ISOLATION JT @ HSS COLUMNS
NTS

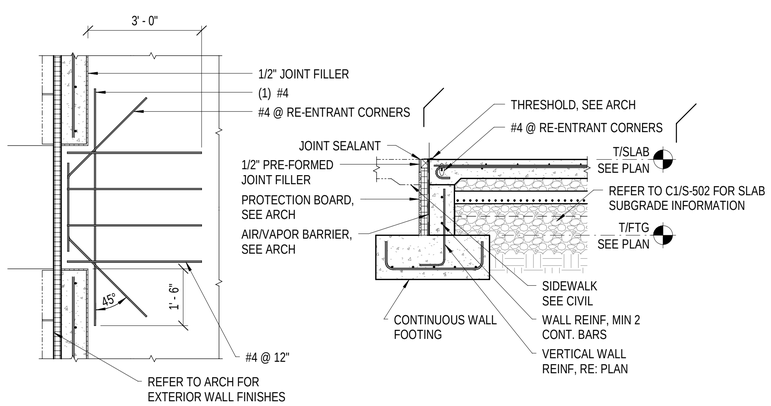

A1 SOG @ EXTERIOR DOOR OPENINGS
NTS

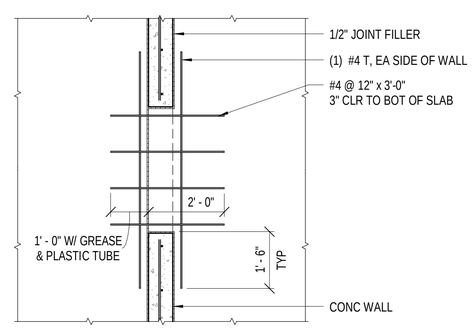

A3 SOG @ INTERIOR DOOR OPENINGS
NTS

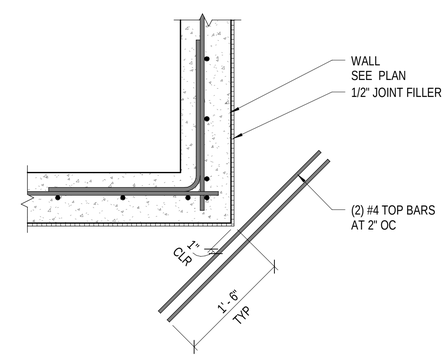

A4 SLAB RE-ENTRANT CORNER REINF
NTS

SYM	DESCRIPTION	DATE	APPR

NAVFAC

LAURA ARICO PRESLEY, REGISTERED ENGINEER, AGRICULTURE COMMERCE, No. 106363, STATE OF TENNESSEE, 06/27/2025, SEAL

Jacobs
1100 NORTH GLEBE ROAD
SUITE 500
ARLINGTON, VIRGINIA 22201
571.218.1000
FAX: 571.218.1600

AE INFO

APPROVED
FOR COMMANDER NAVFAC 8/14/2025

ACTIVITY
APPROVED BY LCDR ELIZABETH OLOKODE NAVFAC NLON FEAD DIRECTOR NEW LONDON, GROTON, CT

SATISFACTORY TO DATE	05/27/2025		
DES	JH	DRW JT	CHK LP
PM/DM	SMS/CWJ		
BRANCH MANAGER	NEK		
CHIEF ENG/ARCH	JWJ		
FIRE PROTECTION	HPN		

DEPARTMENT OF THE NAVY
NAVAL FACILITIES ENGINEERING SYSTEMS COMMAND - MID-ATLANTIC
NAVAL FACILITIES ENGINEERING SYSTEMS COMMAND
MID-ATLANTIC
NAVAL STATION - NORFOLK, VA
NAVAL SUBMARINE BASE NEW LONDON
GROTON, CONNECTICUT
P-1102 WEAPONS MAGAZINE & ORDNANCE OPERATIONS FACILITY
OPERATIONS
TYPICAL SLAB-ON-GROUND DETAILS

SCALE: AS NOTED
EPROJECT NO.: 1667770
CONSTR. CONTR. NO.
NAVFAC DRAWING NO. 12893965
SHEET 15 OF 140
S-502

6/20/2025 12:56:36 PM S-502
\\dc1vs01\Hdqt\PDZE\1628\STRU\BLDG-1667770-S-BIM_v21.rvt

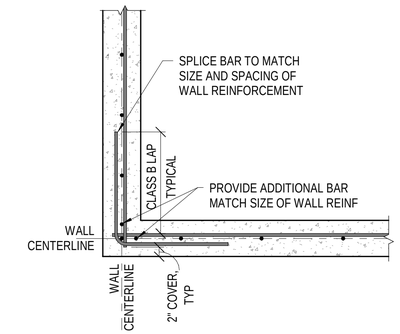

C1 CONCRETE WALL AT CORNER
NTS

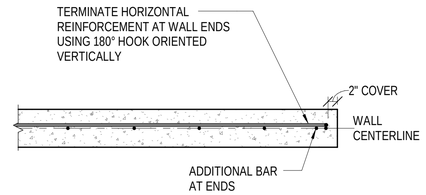

C2 CONCRETE WALL AT ENDS/JAMBS
NTS

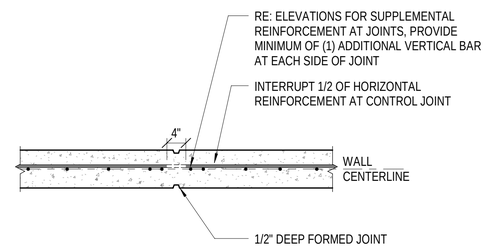

C3 CONCRETE WALL CONTROL JOINT
NTS

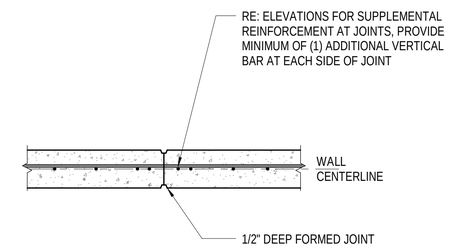

C4 CONCRETE WALL CONSTRUCTION JOINT
NTS

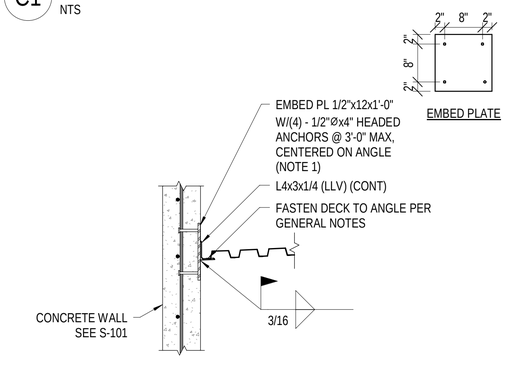

NOTES:
1. ADJUST LAYOUT OF DECK SUPPORT EMBEDS WITHOUT EXCEEDING MAXIMUM INDICATED SPACING TO PROVIDED CLEARANCE WITH BEAM SUPPORT EMBED PER C1/S-505.

B1 DECK END AT CONCRETE WALL
NTS

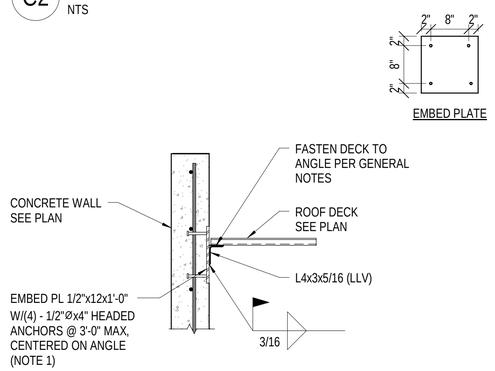

NOTES:
1. ADJUST LAYOUT OF DECK SUPPORT EMBEDS WITHOUT EXCEEDING MAXIMUM INDICATED SPACING TO PROVIDED CLEARANCE WITH BEAM SUPPORT EMBED PER B4/S-510.

B2 DECK END BEARING ON CONC WALL
NTS

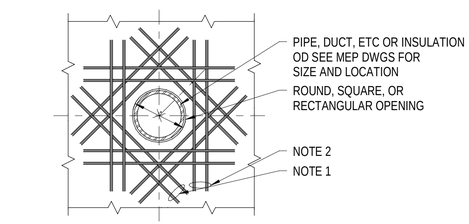

NOTES:
1. PROVIDE 2 #4 DIAGONAL BARS AT CORNERS OF OPENINGS AND EXTEND BAR Ld BEYOND BAR INTERSECTION.
2. PROVIDE REINFORCING EQUAL TO ONE HALF OF THE BARS CUT IN THE SAME DIRECTION ON EACH SIDE OF OPENING BUT NOT LESS THAN 2 #4 BARS. EXTEND BARS 2'-0" PAST THE EDGE OF OPENING. OMIT THESE BARS IF FRAMING IS PROVIDED TO SUPPORT THE OPENING.
3. DETAIL IS ONLY APPLICABLE WHERE SUPPLEMENTAL REINFORCEMENT IS NOT SPECIFIED AT OPENINGS. REFER TO S-201 FOR ADDITIONAL INFORMATION.

B3 CONCRETE WALL OPENING
NTS

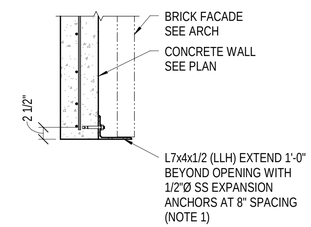

NOTES:
1. COORDINATE PLACEMENT OF POST-INSTALLED ANCHORS SUCH THAT NO WALL REINFORCEMENT IS DAMAGED DURING INSTALLATION. PLACE FIRST ANCHORS 2-1/2" FROM EDGE OF SUPPORT ANGLE.

B4 LINTEL DETAIL
NTS

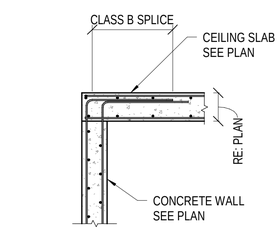

A1 CONCRETE WALL TO ARMS CEILING SLAB
NTS

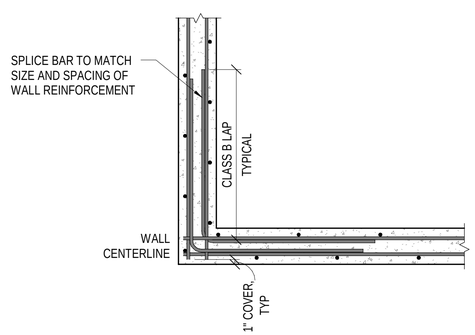

A2 ARMS ROOM WALL CORNER REINFORCEMENT
NTS

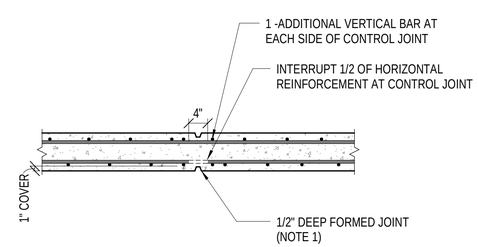

A3 CONCRETE WALL CONTROL JOINT AT ARMS ROOM
NTS

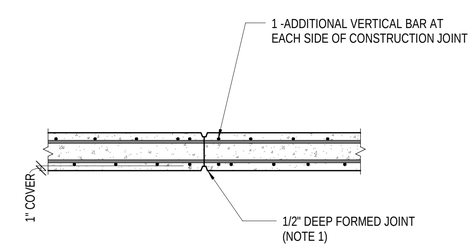

A4 CONCRETE WALL CONSTRUCTION JOINT AT ARMS ROOM
NTS

SYM	DESCRIPTION	DATE	APPR

NAVFAC

LAURA ARICO PRESLEY
REGISTERED ENGINEER
AGRICULTURE COMMERCE
No. 106381
STATE OF TENNESSEE
06/23/2025
SEAL

Jacobs
1100 NORTH GLEBE ROAD
SUITE 500
ARLINGTON, VIRGINIA 22201
571.218.1000
FAX: 571.218.1600

A/E INFO

APPROVED
FOR COMMANDER NAVFAC 8/14/2025

ACTIVITY
APPROVED BY LCDR ELIZABETH OLOKODE NAVFAC NLON FEAD DIRECTOR NEW LONDON, GROTON, CT

SATISFACTORY TO DATE 05/27/2025

DES	JH	DRW	JT	CHK	LP
PM/DM	SMS/CWJ				
BRANCH MANAGER	NEK				
CHIEF ENG/ARCH	JWJ				
FIRE PROTECTION	HPN				

DEPARTMENT OF THE NAVY
NAVAL FACILITIES ENGINEERING SYSTEMS COMMAND - MID-ATLANTIC
NAVAL FACILITIES ENGINEERING SYSTEMS COMMAND
MID-ATLANTIC
NAVAL STATION - NORFOLK, VA
NAVAL SUBMARINE BASE NEW LONDON
GROTON, CONNECTICUT
P-1102 WEAPONS MAGAZINE & ORDNANCE OPERATIONS FACILITY
OPERATIONS
TYPICAL CONCRETE WALL DETAILS

SCALE: AS NOTED
EPROJECT NO.: 1667770
CONSTR. CONTR. NO.
NAVFAC DRAWING NO. 12893966
SHEET 16 OF 140
S-503

6/20/2025 12:56:43 PM S-503
\\dc1-vs01\Hdqt\FDZE1628\STRUB\LOG-1667770-S-BIM_v21.rvt

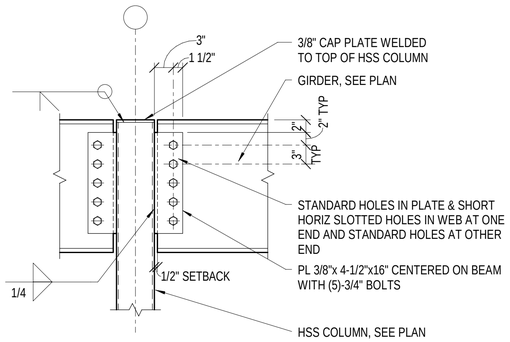

C1 GIRDER CONNECTION AT HSS COLUMN

NTS

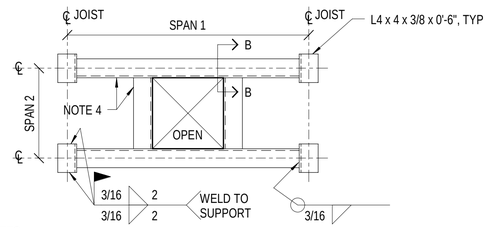

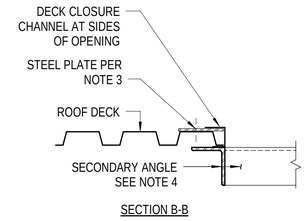

NOTES:

1. SEE ARCH, MECH, ELECT, PLUMB, FIRE PROTECT, AND TELECOM DRAWINGS FOR OPENINGS NOT SHOWN ON THE STRUCT DRAWINGS. COORD OPENINGS W/ ACTUAL EQUIPMENT FURNISHED.
2. OPENINGS WHERE THE LARGEST DIMENSION IS 6" OR LESS DO NOT REQUIRE REINFORCING PROVIDED NO MORE THAN 1 RIB IS REMOVED.
3. OPENINGS WHERE THE LARGEST DIMENSION IS GREATER THAN 6" AND LESS THAN 12" MUST BE REINFORCED WITH A STEEL PLATE FASTENED TO UNCUT TOP FLANGES OF THE DECK WITH # 10 SELF-DRILLING SCREWS AT MAXIMUM 8" OC. PROVIDE AT LEAST 1 FASTENER IN EACH CORNER.
   - GREATER THAN 6" TO 8" OPENINGS MIN 0.045" PLATE
   - GREATER THAN 8" TO 12" OPENINGS MIN 0.057" PLATE
4. PROVIDE SECONDARY STEEL FRAMING AT OPENINGS GREATER THAN 12" IN ANY DIRECTION AS FOLLOWS. SPAN L = THE GREATER OF SPAN 1 & SPAN 2.
   - SPAN L = 1'-0" TO 4'-0" - L4 x 3 1/2 x 5/16 LLV
   - SPAN L = 4'-0" TO 8'-0" - L5 x 3 1/2 x 3/8 LLV

C2 OPENINGS IN STEEL ROOF DECK

NTS

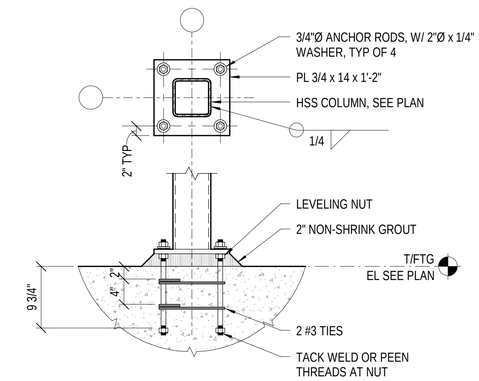

C4 HSS COLUMN BASE PLATE

NTS

SYM	DESCRIPTION	DATE	APPR

NAVFAC

LAURA ARICO PRESLEY
REGISTERED ENGINEER
AGRICULTURE
COMMERCE
No. 106363
STATE OF TENNESSEE
06/23/2025
SEAL

Jacobs
1100 NORTH GLEBE ROAD
SUITE 500
ARLINGTON, VIRGINIA 22201
571.218.1000
FAX: 571.218.1600

A/E INFO

APPROVED

FOR COMMANDER NAVFAC 06/24/2025

ACTIVITY
APPROVED BY LCDR ELIZABETH OLOKODE NAVFAC NLON FEAD DIRECTOR NEW LONDON, GROTON, CT

SATISFACTORY TO DATE 05/27/2025

DES	JH	DRW	JT	CHK	LP

PM/DM	SMS/CWJ
BRANCH MANAGER	NEK
CHIEF ENG/ARCH	JWJ
FIRE PROTECTION	HPN

DEPARTMENT OF THE NAVY
NAVAL FACILITIES ENGINEERING SYSTEMS COMMAND
MID-ATLANTIC
NAVAL FACILITIES ENGINEERING SYSTEMS COMMAND - MID-ATLANTIC
NAVAL STATION - NORFOLK, VA
NAVAL SUBMARINE BASE NEW LONDON
GROTON, CONNECTICUT
P-1102 WEAPONS MAGAZINE & ORDNANCE OPERATIONS FACILITY
OPERATIONS
TYPICAL STEEL DETAILS

SCALE: AS NOTED
EPROJECT NO.: 1667770
CONSTR. CONTR. NO.
NAVFAC DRAWING NO. 12893967
SHEET 17 OF 140

S-504

6/20/2025 12:56:49 PM S-504
\\bk1-v001\Revit\PFDZE1629\STRU\BLDG 1667770-S BIM_v21.rvt

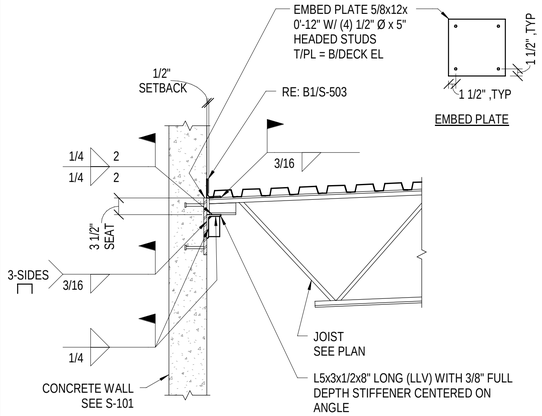

NOTE: MIN 2-1/2" JOIST BEARING ON PLATE

C1 JOIST ON CONC WALL
NTS

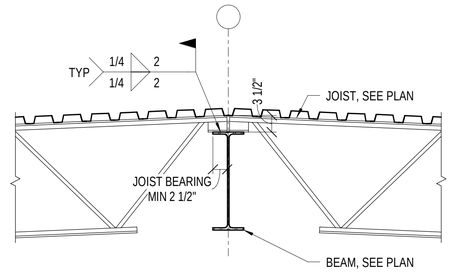

C2 JOIST ON BEAM
NTS

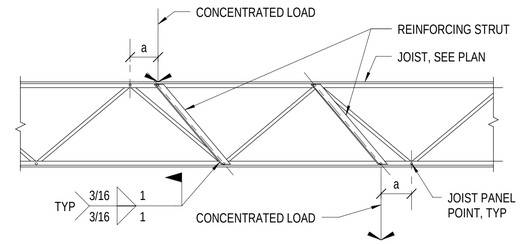

NOTE: PROVIDE L1-1/2X1-1/2X3/16 REINFORCING STRUT ON EACH SIDE OF JOIST WEB WHEN CONCENTRATED LOAD IS APPLIED TO THE TOP OR BOTTOM CHORDS AND DISTANCE "a" IS GREATER THAN 3" FROM A PANEL POINT

C3 JOIST CHORD REINFORCEMENT
NTS

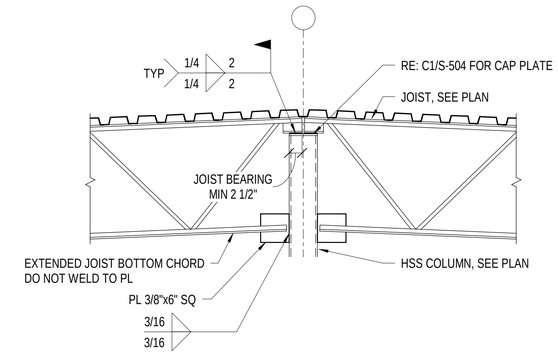

C4 JOIST ON HSS COLUMN
NTS

SYM	DESCRIPTION	DATE	APPR

NAVFAC

LAURA ARICO PRESLEY
REGISTERED ENGINEER
AGRICULTURE
COMMERCE
No. 106363
STATE OF TENNESSEE
06/23/2025
SEAL

Jacobs
1100 NORTH GLEBE ROAD
SUITE 500
ARLINGTON, VIRGINIA 22201
571.218.1000
FAX: 571.218.1600

A/E INFO

APPROVED
FOR COMMANDER NAVFAC 8/14/2025

ACTIVITY
APPROVED BY LCDR ELIZABETH
OLOKODE NAVFAC NLON FEAD
DIRECTOR NEW LONDON, GROTON, CT

SATISFACTORY TO DATE 05/27/2025

DES	DRW	CHK
JH	JT	LP

PM/DM	SMS/CWJ
BRANCH MANAGER	NEK
CHIEF ENG/ARCH	JWJ
FIRE PROTECTION	HPN

DEPARTMENT OF THE NAVY
NAVAL FACILITIES ENGINEERING SYSTEMS COMMAND
MID-ATLANTIC
NAVAL FACILITIES ENGINEERING SYSTEMS COMMAND - MID-ATLANTIC
NAVAL STATION - NORFOLK, VA
NAVAL SUBMARINE BASE NEW LONDON
GROTON, CONNECTICUT
P-1102 WEAPONS MAGAZINE & ORDNANCE OPERATIONS FACILITY
OPERATIONS
TYPICAL JOIST DETAILS

SCALE: AS NOTED
EPROJECT NO.: 1667770
CONSTR. CONTR. NO.
NAVFAC DRAWING NO.
12893968
SHEET 18 OF 140
S-505

6/20/2025 12:56:52 PM S-505
\\bc1-vs01\Revit\PFDZE1629\STRU\BLDG 1667770-S BIM_v21.rvt

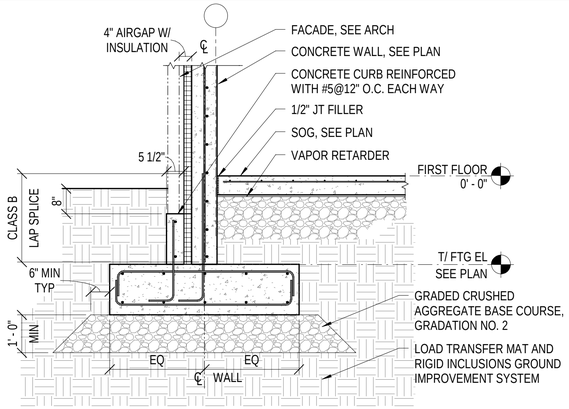

NOTE: SEE SCHEDULE FOR FOOTING SIZE AND REINF

C1 PERIMETER WALL FOOTING & SOG
1/2" = 1'-0"

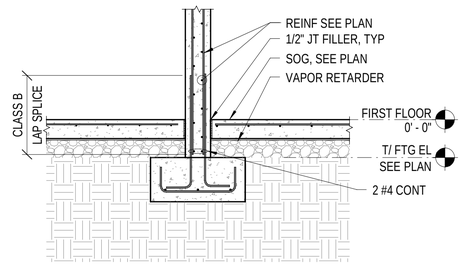

NOTE: SEE SCHEDULE FOR FOOTING SIZE AND REINF

C2 INTERIOR WALL FOOTING & SOG
1/2" = 1'-0"

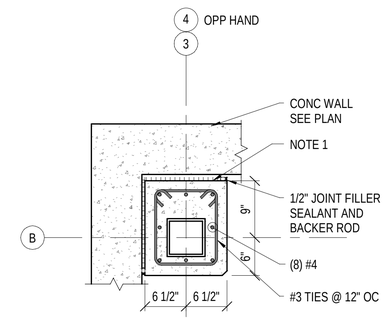

NOTES:
1. TERMINATE TOP OF ENCASEMENT 1" BELOW CONCRETE SLAB AT ARMS ROOM, PROVIDE 1" THICK COMPRESSIBLE FILLER BETWEEN TOP OF ENCASEMENT AND ROOF SLAB ABOVE.

C3 HSS COLUMN ENCASEMENT
1" = 1'-0"

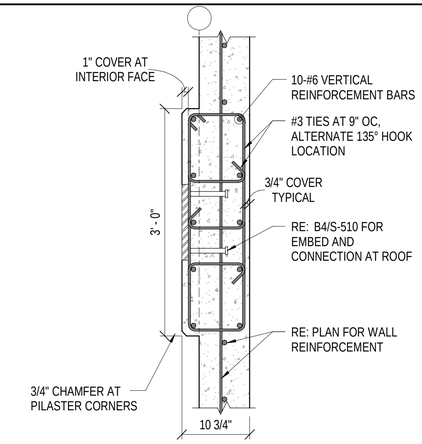

C4 CONCRETE PILASTER AT GIRDER (PLAN)
1" = 1'-0"

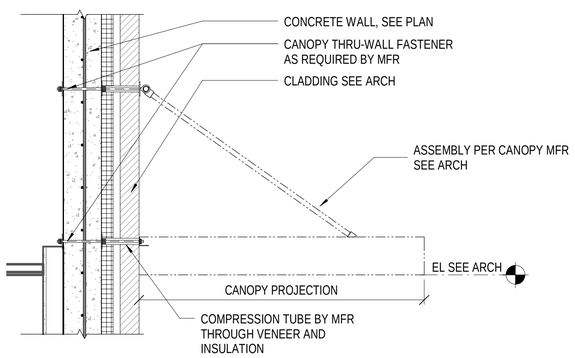

NOTE: DO NOT DRILL THROUGH REBAR

B1 CANOPY ANCHORAGE DETAIL
3/4" = 1'-0"

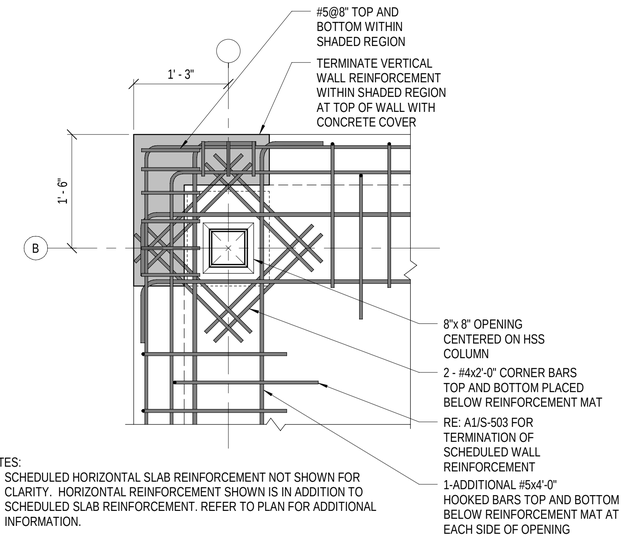

NOTES:
1. SCHEDULED HORIZONTAL SLAB REINFORCEMENT NOT SHOWN FOR CLARITY. HORIZONTAL REINFORCEMENT SHOWN IS IN ADDITION TO SCHEDULED SLAB REINFORCEMENT. REFER TO PLAN FOR ADDITIONAL INFORMATION.

B2 ARMS ROOM CEILING FRAMING PLAN DETAIL
1" = 1'-0"

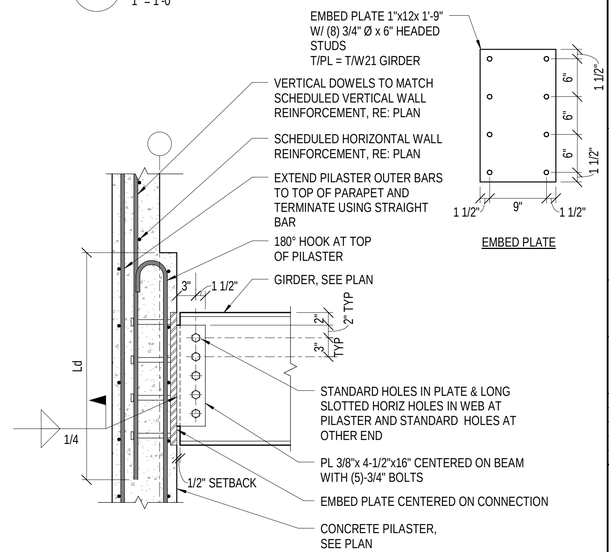

B4 GIRDER CONNECTION AT AT PILASTER (ELEV)
NTS

0 6" 1' 2' 4'
3/4" = 1'-0"

0 6" 1' 2' 3'
1" = 1'-0"

0 1' 2' 4' 6'
1/2" = 1'-0"

SYM	DESCRIPTION	DATE	APPR

NAVFAC

LAURA ARICO PRESLEY, REGISTERED ENGINEER, AGRICULTURE, COMMERCE, No. 106381, STATE OF TENNESSEE, 06/27/2025
SEAL

Jacobs
1100 NORTH GLEBE ROAD
SUITE 500
ARLINGTON, VIRGINIA 22201
571.218.1000
FAX: 571.218.1600

A/E INFO

APPROVED
FOR COMMANDER NAVFAC 8/14/2025

ACTIVITY
APPROVED BY LCDR ELIZABETH OLOKODE NAVFAC NLON FEAD DIRECTOR NEW LONDON, GROTON, CT

SATISFACTORY TO DATE 05/27/2025

DES	SK	DRW	SK	CHK	LP
PM/DM	SMS/CWJ				
BRANCH MANAGER	NEK				
CHIEF ENG/ARCH	JVJ				
FIRE PROTECTION	HPN				

DEPARTMENT OF THE NAVY
NAVAL FACILITIES ENGINEERING SYSTEMS COMMAND - MID-ATLANTIC
MID-ATLANTIC
NAVAL FACILITIES ENGINEERING SYSTEMS COMMAND
NAVAL STATION - NORFOLK, VA
NAVAL SUBMARINE BASE NEW LONDON
GROTON, CONNECTICUT
P-1102 WEAPONS MAGAZINE & ORDNANCE OPERATIONS FACILITY
OPERATIONS
SECTIONS & DETAILS

SCALE: AS NOTED
EPROJECT NO.: 1667770
CONSTR. CONTR. NO.
NAVFAC DRAWING NO. 12893969
SHEET 19 OF 140

S-510

6/21/2025 2:21:53 AM S-510
\\ad.ivsd.com\eap\PROJECTS\28\STRUBLDG-1667770-S-BIM_v21.rvt

SPREAD FOOTING SCHEDULE

MARK	SIZE			BOTTOM REINFORCEMENT		TOP REINFORCEMENT		REMARKS
	WIDTH	LENGTH	THICK	LONG BARS	SHORT BARS	LONG BARS	SHORT BARS	
F1	5' - 0"	5' - 0"	1' - 8"	7 - #5	7 - #5	7 - #5	7 - #5	TERMINATE REINFORCEMENT USING STANDARD HOOK
F2	4' - 0"	4' - 0"	1' - 2"	4 - #5	4 - #5	-	-	TERMINATE REINFORCEMENT USING STANDARD HOOK

WALL FOOTING SCHEDULE

MARK	SIZE (FT UNO)		BOTTOM REINFORCEMENT		TOP REINFORCEMENT		REMARKS
	WIDTH	THICKNESS	LONG BARS	SHORT BARS	LONG BARS	SHORT BARS	
WF1	4' - 0"	1' - 4"	5 - #5	#5@10"	5 - #5	#5@10"	TERMINATE SHORT REINFORCEMENT USING STANDARD HOOK, LAP CORNER BARS USING L-BAR WITH TENSION LAP SPLICE AT EACH END OF BAR
WF2	2' - 6"	1' - 2"	3 - #5	#5@8"			TERMINATE SHORT REINFORCEMENT USING STANDARD HOOK, LAP CORNER BARS USING L-BAR WITH TENSION LAP SPLICE AT EACH END OF BAR
WF3	5' - 0"	1' - 4"	5 - #5	#5@10"	5 - #5	#5@10"	TERMINATE SHORT REINFORCEMENT USING STANDARD HOOK, LAP CORNER BARS USING L-BAR WITH TENSION LAP SPLICE AT EACH END OF BAR
WF4	3' - 0"	1' - 3"	4 - #5	#5@9"	4 - #5	#5@9"	TERMINATE SHORT REINFORCEMENT USING STANDARD HOOK, LAP CORNER BARS USING L-BAR WITH TENSION LAP SPLICE AT EACH END OF BAR

JOIST SCHEDULE

MARK	MAXIMUM DEPTH (IN)	IMPOSING LOADING (LBS/FT)								SNOW DRIFT EXTENT
		SDL (UNIFORM)	ROOF LIVE LOAD (UNIFORM)	ULT. WIND DOWN (UNIFORM)	ULT. WIND UPLIFT (ZONE A)	ULT. WIND UPLIFT (ZONE B)	ULT. WIND UPLIFT (ZONE C)	UNIFORM SNOW	SNOW DRIFT (A)	
24K SP-1	24	40	40	32	-101	-101	-101	123	NOTE 5	NOTE 5
24K SP-2	24	85	85	68	-165	-165	-165	205	NOTE 5	NOTE 5
24K SP-3	24	100	100	80	-228	-224	-224	189	95	5'-0"
24K SP-4	24	100	100	80	-224	-170	-170	136	148	7'-4"
24K SP-5	24	100	100	80	-224	-187	-115	107	203	9'-3"

NOTES:
1. ALL JOISTS MUST BE DESIGNED TO SJI DESIGN SPECIFICATIONS INCLUDING STRENGTH AND DEFLECTION REQUIREMENTS.
2. JOIST MANUFACTURER TO DESIGN JOISTS TO SUPPORT LOADS AS INIDICATED IN THE JOIST SCHEDULE ABOVE.
2. SUPER-IMPOSED DEAD LOADS MUST BE APPLIED IN DESIGN SUCH THAT THE WORST CASE LOADING CONDITION IS MET FOR BOTH DOWNWARD AND UPWARD LOADING CONDITIONS (I.E. SUPER IMPOSED LOADING OMITTED FROM DESIGN IN UPLIFT LOAD COMBINATIONS).
3. REFER TO DESIGN CRITERIA, SPECIFICATIONS, AND DRAWINGS FOR ADDITIONAL DESIGN REQUIREMENTS INCLUDING MATERIAL REQUIREMENTS AND DEFLECTION CRITERIA.
4. FOR IMPOSED LOADING TABLE ABOVE, DOWNWARD TYPE LOADING IS POSITIVE AND UPWARD/UPLIFT TYPE LOADING IS SHOWN AS NEGATIVE.
5. WHERE INDICATED BY THIS NOTE, THE "UNIFORM SNOW" LOADING IN THE JOIST SCHEDULE INCLUDES BOTH UNIFORM AND SNOW DRIFT TYPE LOADING.

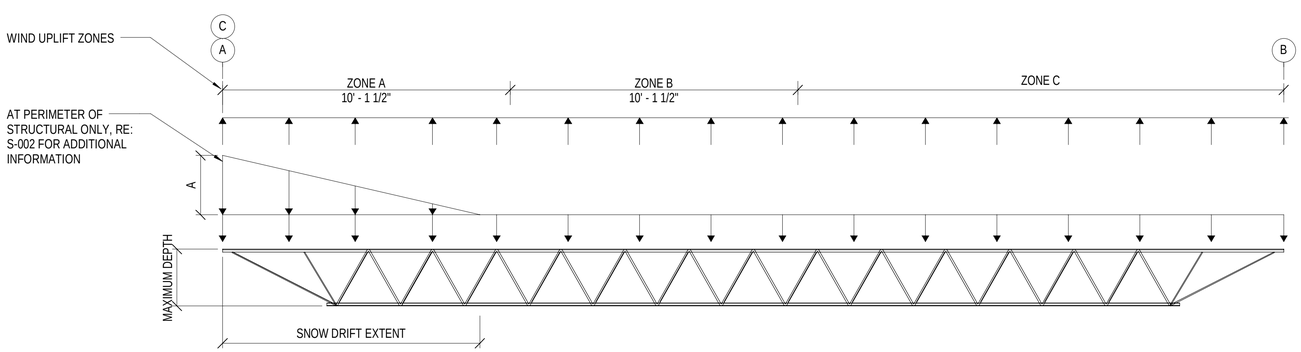

SYM	DESCRIPTION	DATE	APPR

NAVFAC

LAURA ARICO PRESLEY
REGISTERED ENGINEER
AGRICULTURE
COMMERCE
No. 106383
STATE OF TENNESSEE
06/27/2025
SEAL

Jacobs
1100 NORTH GLEBE ROAD
SUITE 500
ARLINGTON, VIRGINIA 22201
571.218.1000
FAX: 571.218.1600

A/E INFO

APPROVED
FOR COMMANDER NAVFAC 06/27/2025

ACTIVITY
APPROVED BY LCDR ELIZABETH OLOKODE NAVFAC NLON FEAD DIRECTOR NEW LONDON, GROTON, CT

SATISFACTORY TO DATE 05/27/2025

DES	DRW	CHK
JH	JT	LP

PM/DM	SMS/CWJ
BRANCH MANAGER	NEK
CHIEF ENG/ARCH	JWJ
FIRE PROTECTION	HPN

DEPARTMENT OF THE NAVY
NAVAL FACILITIES ENGINEERING SYSTEMS COMMAND
MID-ATLANTIC
NAVAL FACILITIES ENGINEERING SYSTEMS COMMAND - MID-ATLANTIC
NAVAL STATION - NORFOLK, VA
NAVAL SUBMARINE BASE NEW LONDON
GROTON, CONNECTICUT
P-1102 WEAPONS MAGAZINE & ORDNANCE OPERATIONS FACILITY
OPERATIONS
SCHEDULES

SCALE: AS NOTED
EPROJECT NO.: 1667770
CONSTR. CONTR. NO.
NAVFAC DRAWING NO. 12893970
SHEET 20 OF 140
S-601

6/20/2025 12:37:04 PM S-601
\\bk1vs01\fedgis\PDZE1629\STRUB\LDG S-1667770-S-BIM_v21.rvt

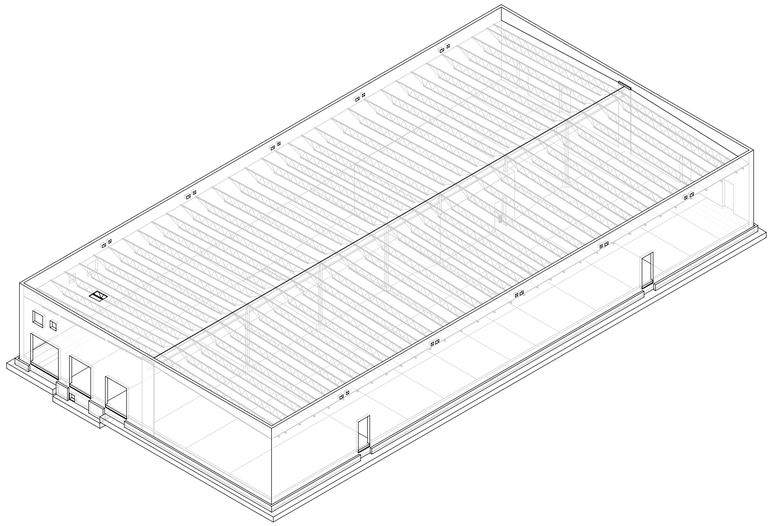

C1 NORTHEAST ISOMETRIC

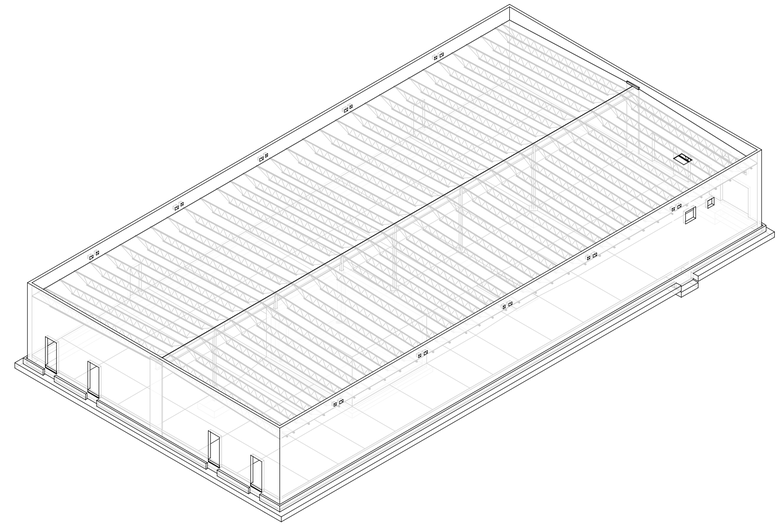

C3 SOUTHWEST ISOMETRIC

NOTE: ISOMETRICS ARE PROVIDED FOR REFERENCE ONLY. DO NOT SCALE FOR DIMENSIONS OR USE FOR CONSTRUCTION.

SYM	DESCRIPTION	DATE	APPR

NAVFAC

LAURA ARICO PRESLEY
REGISTERED ENGINEER
AGRICULTURE
COMMERCE
No. 106363
STATE OF TENNESSEE
06/23/2025
SEAL

Jacobs
1100 NORTH GLEBE ROAD
SUITE 500
ARLINGTON, VIRGINIA 22201
571.218.1000
FAX: 571.218.1600

A/E INFO

APPROVED

FOR COMMANDER NAVFAC 8/14/2025

ACTIVITY
APPROVED BY LCDR ELIZABETH OLOKODE NAVFAC NLON FEAD DIRECTOR NEW LONDON, GROTON, CT

SATISFACTORY TO DATE 05/27/2025

DES	JH	DRW	JT	CHK	LP

PM/DM	SMS/CWJ
BRANCH MANAGER	NEK
CHIEF ENG/ARCH	JWJ
FIRE PROTECTION	HPN

DEPARTMENT OF THE NAVY
NAVAL FACILITIES ENGINEERING SYSTEMS COMMAND
MID-ATLANTIC

NAVAL FACILITIES ENGINEERING SYSTEMS COMMAND
NAVAL SUBMARINE BASE NEW LONDON
NAVAL STATION - NORFOLK, VA

P-1102 WEAPONS MAGAZINE & ORDNANCE OPERATIONS FACILITY

GROTON, CONNECTICUT

OPERATIONS

3D ISOMETRIC VIEWS

SCALE: AS NOTED

EPROJECT NO.: 1667770

CONSTR. CONTR. NO.

NAVFAC DRAWING NO.
12893971

SHEET 21 OF 140

S-901

6/20/2025 12:27:12 PM S-901
\\bz1vs01\Revit\PROJECTS\1629\STRUBLDG 1667770-S BIM_v21.rvt

ARCHITECTURAL SYMBOLS

1 / SIM / A-501 — DETAIL NUMBER; SHEET WHERE DRAWN	DETAIL TAG
ROOM / 101 — ROOM NAME; ROOM NUMBER	ROOM TAG
A1 / A-901 — PHOTOGRAPH NUMBER; SHEET WHERE SHOWN	PHOTOGRAPH TAG
A1 / A-301 — BUILDING	
A1 / A-301 — SECTION NUMBER; SHEET WHERE DRAWN	BUILDING SECTION TAG
A1 / A-401 — INTERIOR ELEVATION NUMBER; SHEET WHERE DRAWN	INTERIOR ELEVATION TAG
A1 / A-301 — SECTION NUMBER; SHEET WHERE DRAWN	WALL / PARTIAL BUILDING SECTION TAG
1 — KEYNOTE NUMBER	NEW WORK KEYNOTE TAG
234 — SPECIALITY ITEM NUMBER	SPECIALITY ITEM TAG
A1 / A-301 — DIRECTION OF VIEW; ELEVATION NUMBER; SHEET WHERE DRAWN	EXTERIOR ELEVATION TAG
1 — KEYNOTE NUMBER	DEMO KEYNOTE TAG
33 — PARTITION IN PLAN; PARTITION TYPE DESIGNATION (REFER TO PARTITION SCHEDULE)	PARTITION TYPE TAG
101 — DOOR NUMBER (REFER TO DOOR SCHEDULE)	DOOR TAG
B — WINDOW TYPE LETTER	WINDOW TYPE TAG

MATERIALS LEGEND

SECTION	ELEVATION
WOOD - ROUGH	EIFS - PAINTED
WOOD BLOCKING	ARCHITECTURAL MASONRY
PLYWOOD	CMU - PAINTED
CONCRETE MASONRY UNIT	GLAZED BLOCK
BRICK	GLAZING
CAST-IN-PLACE CONCRETE	SPANDREL GLAZING / STEEL PANEL
STEEL	CONCRETE FOUNDATION
ARCHITECTURAL MASONRY UNIT	
GYPSUM BOARD	
BATT/LOOSE FILL INSULATION	
RIGID INSULATION	
SAND / MORTAR / PLASTER	
EARTH / COMPACT FILL	
POROUS FILL / GRAVEL	
ACOUSTICAL TILE CEILING	
CERAMIC TILE	
FINISHED WOOD	
PROTECTION BOARD	

GENERAL SHEET NOTES

A MATERIALS MUST BE NEW AND PROVIDED BY THE CONTRACTOR UNLESS SPECIFICALLY NOTED AS EXISTING OR AS PROVIDED BY THE GOVERNMENT.

B WOOD BLOCKING AND MISCELLANEOUS STEEL SHOWN IN DETAILS AND SECTIONS MUST BE CONTINUOUS UNLESS SPECIFICALLY NOTED OTHERWISE.

C VERIFY FIELD CONDITIONS AND DIMENSIONS PRIOR TO PROCEEDING WITH THE WORK. DIMENSIONS FOR EXISTING WORK ARE INDICATED AS "±". ALL DISCREPANCIES MUST BE BROUGHT TO THE IMMEDIATE ATTENTION OF THE CONTRACTING OFFICER IN WRITING.

D STUDY AND COMPARE THE CONTRACT DOCUMENTS WITH EACH OTHER, AND AT ONCE, REPORT TO THE COR IF ERRORS AND INCONSISTENCIES OR OMISSIONS DISCOVERED. CONSTRUCTION ACTIVITY PERFORMED KNOWING IT INVOLVES A RECOGNIZED ERROR, INCONSISTENCY OR OMISSION IN THE CONTRACT DOCUMENTS WITHOUT SUCH NOTICE TO THE COR, THE CONTRACTOR WILL ASSUME RESPONSIBILITY FOR SUCH PERFORMANCE AND WILL BEAR THE AMOUNT OF THE COST OF THE CONSTRUCTION.

ARCHITECTURAL ABBREVIATIONS

AB	ANCHOR BOLT	CORR	CORRIDOR	FT	FOOT, FEET	NOM	NOMINAL	SECT	SECTION
ACS PNL	ACCESS PANEL	CPT	CARPET / COMMON PATH OF TRAVEL	FTG	FOOTING	NTS	NOT TO SCALE	SF	SQUARE FOOT
ADJ	ADJUST	CT	CERAMIC TILE	GA	GAUGE	OA	OUTSIDE AIR	SH	SHINGLES / SINGLE HUNG
ALT	ALTERNATE, ALTITUDE	CTR	CENTER	GALV	GALVANIZED	OC	ON CENTER	SIM	SIMILAR
ALUM	ALUMINUM	D	DEPTH / DEEP	GFCI	GOVERNMENT FURNISHED CONTRACTOR INSTALLED	OD	OUTSIDE DIAMETER / DIMENSION	SPC	SUSPENDED PLASTER CEILING
ANOD	ANODIZED	DEG	DEGREE	GL	GLASS / GROUND LEVEL	OPH	OPPOSITE HAND	SPEC	SPECIFICATION
APPROX	APPROXIMATE	DEMO	DEMOLITION	GR	GROSS	OPNG	OPENING	SQ	SQUARE
ARCH	ARCHITECT	DET	DETAIL	GSU	GLAZED STRUCTURAL UNIT	OPP	OPPOSITE	STD	STANDARD
ASPH	ASPHALT	DIA	DIAMETER	GYP	GYPSUM	OPT	OPTIONAL	STOR	STORAGE
ATC	ACOUSTICAL TILE CEILING	DIM	DIMENSION	H	HIGH	PCT	PERCENT	STR	STRAIGHT STRIKE / STRINGERS
BD	BOARD	DR	DRAIN	HB	HOSE BIB	PEJ	PREMOLDED EXPANSION JOINT	SUSP	SUSPENDED
BLDG	BUILDING	DS	DOWNSPOUT	HDW	HARDWARE	PL	PROPERTY LINE	T&B	TOP AND BOTTOM
BLW	BELOW	DW	DISHWASHER	HM	HOLLOW METAL	PLAS	PLASTER / PLASTIC	TEL	TELEPHONE
BM	BEAM	DWG	DRAWING	HORIZ	HORIZONTAL	PLYWD	PLYWOOD	THRES	THRESHOLD
BOS	BOTTOM OF SLAB / STEEL	E	EAST	HT	HEIGHT	PNL	PANEL	THRU	THROUGH
BOT	BOTTOM	EA	EACH	HVY	HEAVY	PRELIM	PRELIMINARY	TOS	TOP OF SLAB / STEEL
BRG	BEARING	EIFS	EXTERIOR INSULATION & FINISH SYSTEM	ID	INSIDE DIAMETER	PSF	POUNDS PER SQUARE FOOT	TYP	TYPICAL
BSMT	BASEMENT	EJ	EXPANSION JOINT	INSUL	INSULATION / INSULATED	PSI	POUNDS PER SQUARE INCH	UON	UNLESS OTHERWISE NOTED
BTWN	BETWEEN	EL	ELEVATION	INT	INTERIOR	PT	PAINT	V	VOLT
C TO C	CENTER TO CENTER	ELEC	ELECTRIC / ELECTRICAL	J-BOX	JUNCTION BOX	QT	QUARRY TILE	VAR	VARIATION
CAB	CABINET	EPDM	ETHLENE PROPYLENE DIEN MONOMER	JAN	JANITOR CLOSET	R	RADUIS / RISER	VB	VINYL BASE
CEM	CEMENT	EQ	EQUAL	LAV	LAVATORY	RA	RETURN AIR	VCT	VINYL COMPOSITION TILE
CER	CERAMIC	EQUIP	EQUIPMENT	LB	POUND	RAD	RETURN AIR DUCT	VENT	VENTILATION / VENTILATOR
CI	CAST IRON	EW	EACH WAY	LP	LOW POINT	RB	RESILIENT BASE	VERT	VERTICAL
CIP	CAST IRON PIPE	EWC	ELECTRIC WATER COOLER	LT	LIGHT	RD	ROOF DRAIN / ROAD	VEST	VESTIBULE
CJ	CONTROL / CONSTRUCTION JOINT	EXH	EXHAUST	MACH	MACHINE	REFL	REFLECT	VS	VENT STACK
CLG	CEILING	EXIST	EXISTING	MATL	MATERIAL	REFR	REFRIGERATION	VTR	VENT THROUGH ROOF
CLG REG	CEILING REGISTER	EXP	EXPANSION / EXPOSED / EXPAND	MAX	MAXIMUM	REINF	REINFORCE	VWC	VINYL WALL COVERING
CLR	CLEAR	EXT	EXTERIOR	MECH	MECHANICAL	REQD	REQUIRED	W	WASTE / WATT / WEST / WIDE
CMU	CONCRETE MASONRY UNIT	FD	FLOOR DRAIN	MFG	MANUFACTURING	REV	REVISION	W/	WITH
CND	CONDUIT	FDTN	FOUNDATION	MIN	MINIMUM / MINUTE	RF	RESILIENT FLOORING	W/O	WITHOUT
CNDS	CONDENSATE	FF	FINISH FACE	MISC	MISCELLANEOUS	RL	ROOF LEADER	WC	WATER CLOSET / WALL COVERING
CNSTR	CONSTRUCTION	FFE	FURNITURE, FIXTURES, AND EQUIPMENT	ML	MATCH LINE	RM	ROOM	WD	WOOD
CNTR	CNTR	FG	FIGURE	MO	MASONRY OPENING / MOTOR OPERATED	RND	ROUND	WH	WATER HEATER
CO	CLEANOUT	FHC	FIRE HOUSE CABINET	MTD	MOUNTED	RO	ROUGH OPENING	WP	WATERPROOFING / WEATHERPROOF / WORKING POINT
COL	COLUMN	FIN FLR	FINISHED FLOOR	MTG	MOUNTING / MEETING	RS	ROUGH SAWN		
CONC	CONCRETE	FOF	FACE OF FINISH	MTL	METAL	RT	RIGHT	WSCT	WAINSCOT
CONN	CONNECT	FOM	FACE OF MASONRY	MWP	MEMBRANE WATERPROOFING	S	SOUTH	WT	WEIGHT
CONT	CONTINUE / CONTINUOUS	FOS	FACE OF STUB / FACE OF SLAB	N	NORTH	SAPC	SUSPENDED ACOUSTICAL PANEL CEILING	WWF	WELDED WIRE FABRIC
COR	CONTRACTING OFFICER REPRESENTATIVE	FR	FRAME / FIRE RATING / FIRE RESISTANT	NIC	NOT IN CONTRACT	SCHED	SCHEDULE	XRMR	TRANSFORMER
				NO	NUMBER				

SYM	DESCRIPTION	DATE	APPR

NAVFAC

COMMONWEALTH OF VIRGINIA
PETER SOUKAS
Lic. No. 401017157
6/18/2025
ARCHITECT
SEAL

Jacobs
1100 NORTH GLEBE ROAD
SUITE 500
ARLINGTON, VIRGINIA 22201
571.218.1000
FAX: 571.218.1600
A/E INFO

APPROVED
FOR COMMANDER NAVFAC 8/14/2025

ACTIVITY
APPROVED BY LCDR ELIZABETH OLOKODE NAVFAC NLON FEAD DIRECTOR NEW LONDON, GROTON, CT

SATISFACTORY TO DATE	05/27/2025		
DES PS	DRW PS	CHK WS	
PM/DM	SMS/ CWJ		
BRANCH MANAGER	DJD		
CHIEF ENG/ARCH	JWJ		
FIRE PROTECTION	HPN		

DEPARTMENT OF THE NAVY
NAVAL FACILITIES ENGINEERING SYSTEMS COMMAND
MID-ATLANTIC
NAVAL FACILITIES ENGINEERING SYSTEMS COMMAND - MID-ATLANTIC
NAVAL STATION - NORFOLK, VA
NAVAL SUBMARINE BASE NEW LONDON
GROTON, CONNECTICUT
P-1102 WEAPONS MAGAZINE & ORDNANCE OPERATIONS FACILITY
OPERATIONS
ARCHITECTURAL NOTES AND SYMBOLS

SCALE: AS NOTED
EPROJECT NO.: 1667770
CONSTR. CONTR. NO.
NAVFAC DRAWING NO. 12893972
SHEET 22 OF 140
A-001

6/20/2025 10:32:07 AM A-001
\\cle1vs01\fedgis\PDZE1\028\ARCH\BELOG-1667770-A-BIM.rvt

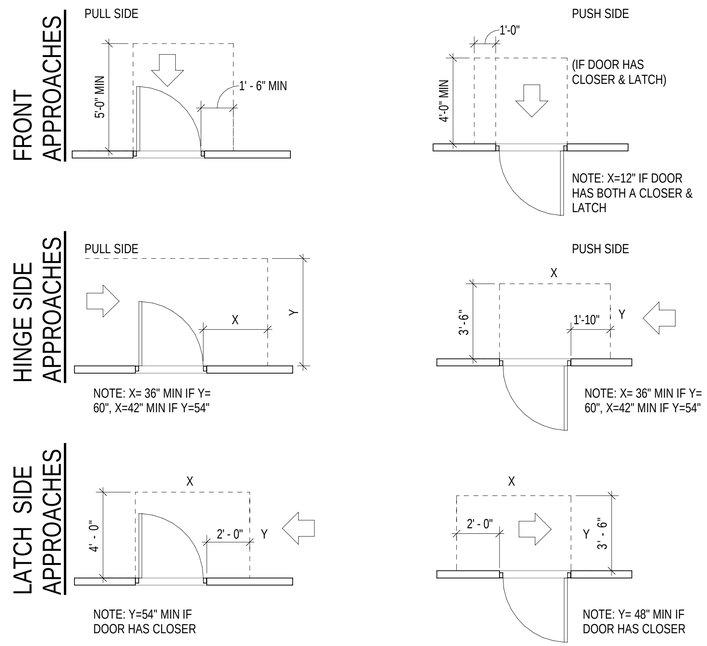

NOTE:
1. ALCOVES MUST COMPLY WITH THE CLEARANCES FOR FRONT APROACHES
2. DOOR HARDWARE MUST BE THE LEVER TYPE
3. DOOR MUST HAVE A MAX 8.5 LB EXTERIOR AND 5LB INTERIOR REQUIRED OPENING FORCE.

C1 ACCESSIBLE DOOR CLEAREANCE S

1" = 1'-0"

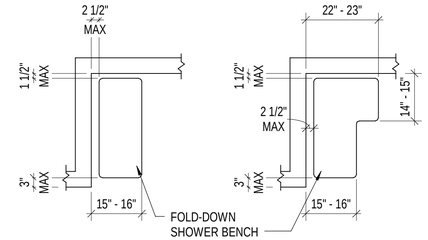

D3 SHOWER BENCH

1/2" = 1'-0"

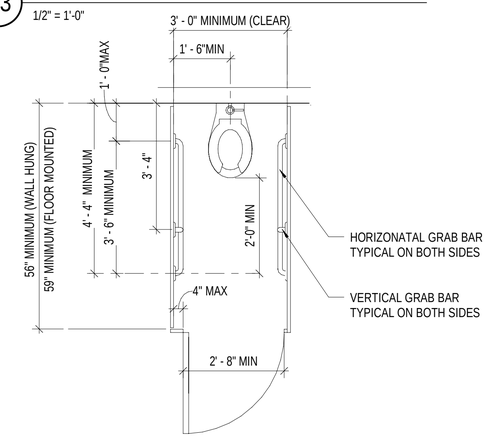

C3 AMBULATORY ACCESSIBLE TOILET STALL

1/2" = 1'-0"

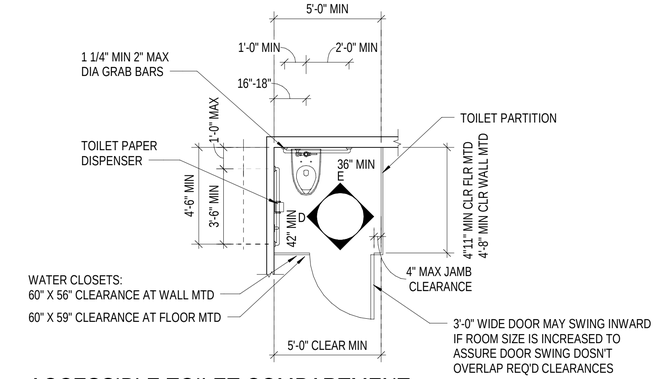

ACCESSIBLE TOILET COMPARTMENT

ABAAS CH.604

NOTE: WHERE A LAV INCLUDED WITHIN A TOILET STALL, THE REQUIREMENTS FOR AN ACCESSIBLE TOILET ROOM AND CH.603 APPLY

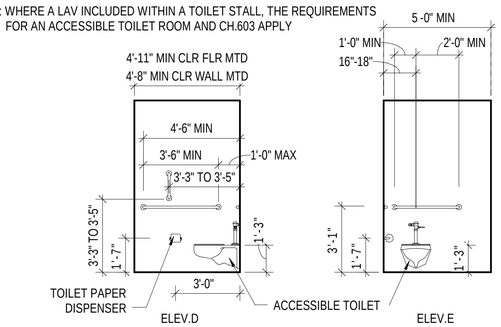

C4 ACCESSIBLETOILET COMPARTMENT

1" = 1'-0"

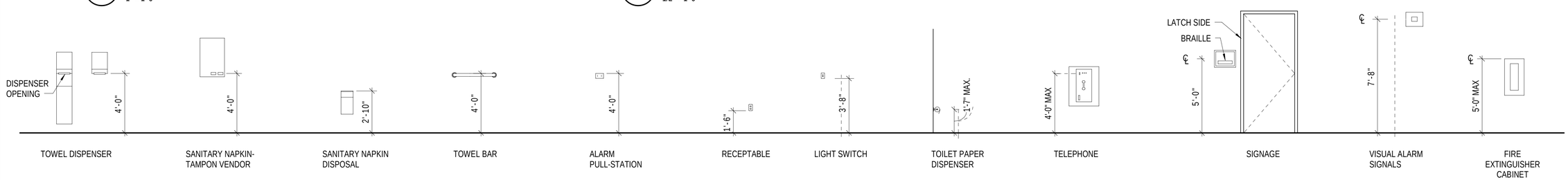

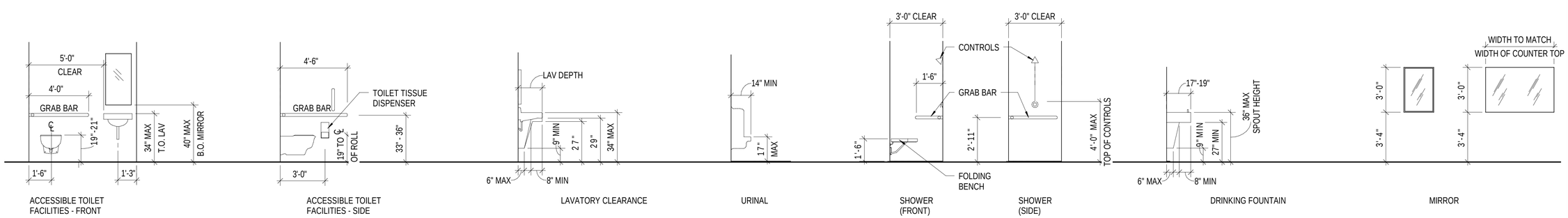

A1 ACCESSIBLE MOUNTING HEIGHTS

1" = 1'-0"

SYM	DESCRIPTION	DATE	APPR

NAVFAC

COMMONWEALTH OF VIRGINIA
PETER SOUKAS
Lic. No. 401017157
6/23/2025
ARCHITECT
SEAL

Jacobs
1100 NORTH GLEBE ROAD
SUITE 500
ARLINGTON, VIRGINIA 22201
571.218.1000
FAX: 571.218.1600

A/E INFO

APPROVED
FOR COMMANDER NAVFAC 8/14/2025

ACTIVITY
APPROVED BY LCDR ELIZABETH OLOKODE NAVFAC NLON FEAD DIRECTOR NEW LONDON, GROTON, CT

SATISFACTORY TO DATE	05/27/2025
DES PS / DRW PS	CHK WS
PM/DM	SMS/ CWJ
BRANCH MANAGER	DJD
CHIEF ENG/ARCH	JWJ
FIRE PROTECTION	HPN

DEPARTMENT OF THE NAVY
NAVAL FACILITIES ENGINEERING SYSTEMS COMMAND - MID-ATLANTIC
NAVAL FACILITIES ENGINEERING SYSTEMS COMMAND
MID-ATLANTIC
NAVAL STATION - NORFOLK, VA
NAVAL SUBMARINE BASE NEW LONDON
GROTON, CONNECTICUT
P-1102 WEAPONS MAGAZINE & ORDNANCE OPERATIONS FACILITY
OPERATIONS
ARCHITECTURAL ACCESSIBILITY STANDARDS & MOUNTING HEIGHTS

SCALE:	AS NOTED
EPROJECT NO:	1667770
CONSTR. CONTR. NO.	
NAVFAC DRAWING NO.	12893973
SHEET	23 OF 140

A-002

6/20/2025 10:32:09 AM A-002
\\ad.jacobs.com\dfs\Projects\US28\ARC-HBLDG-1667770-A-BIM.rvt

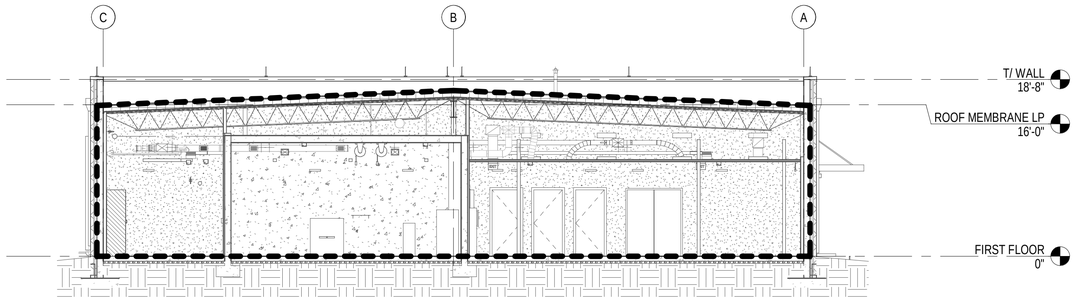

C1 NORTH-SOUTH BUILDING SECTION

1/8" = 1'-0"

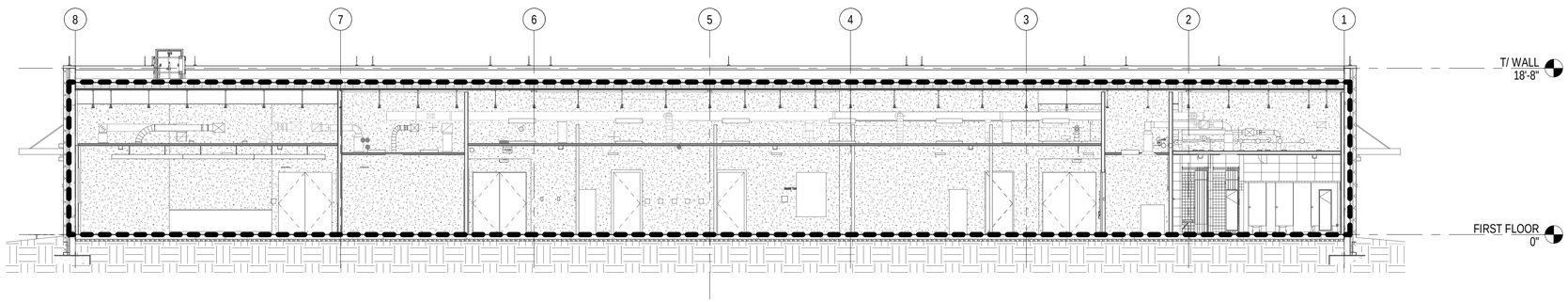

B1 EAST-WEAST BUILDING SECTION

1/8" = 1'-0" (A-102)

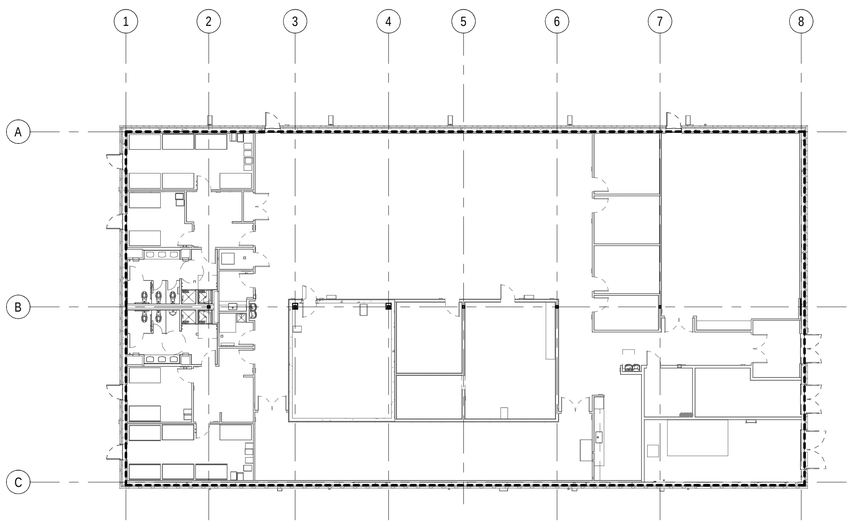

A1 FIRST FLOOR PLAN

1/16" = 1'-0"

GENERAL SHEET NOTES

A. PROVIDE A COMPLETE PRELIMINARY DOCUMENTS REVIEW AND BUILDING ENVELOPE ASSESSMENT BY A PROFESSIONAL CERTIFIED ABAA AUDITOR. REFER TO SPEC SECTION 07 27 10.00 10

B. CONCRETE FLOOR IS AN AIR BARRIER AT GRADE AND AS SUCH, CONCRETE FLOOR PENETRATIONS MUST BE SEALED.

C. SEAL (CAULK) MECHANICAL, ELECTRICAL, FIRE ALARM BOXES AND FIRE ALARM DEVICES.
   a. PROVIDE NON-COMBUSTIBLE INSULATION IN WALL AROUND BOXES, NON-COMBUSTIBLE INSULATION (OR CAULK) INSIDE CONDUIT AFTER WIRES ARE PULLED AT ELECTRICAL BOXES AND FIRE ALARM DEVICES FOR AIR TIGHT SEAL.
   b. WHERE THERE IS NOT SUFFICIENT ACCESS TO SEAL THE BACK OF THE ELECTRICAL BOXES, USE HIGH PRESSURE DUCT SEALER TO PRESSURE SENSITIVE FOIL (FSK) DUCT TAPE FOR AIR TIGHT SEAL.

D. IF AIR BARRIER ENVELOPE ZONES ARE ADJUSTED, GOVERNMENT APPROVAL IS REQUIRED FOR DEVIATIONS TO AIR BARRIER ZONES.

E. THE AIR BARRIER MUST BE CONTIGUOUS AND CONNECTED ACROSS SURFACES OF THE ENCLOSED AIR BARRIER ENVELOPE INDICATED.

F. PROVIDE AIR BARRIER TRANSITION MEMBRANE BETWEEN ADJACENT AIR BARRIER SYSTEMS. TRANSITION AIR BARRIER MEMBRANE MUST BE COMPATIBLE WITH BOTH AIR BARRIER MEMBRANES.

G. PROVIDE A FLEXIBLE AIR BARRIER MEMBRANE BETWEEN BUILIDNG COMPONENTS WITH VARYING ANTICIPATED MOVEMENT AS A RESULT OF BUT NOT LIMITED TO DEFLECTION, THERMAL EXPANSION AND CONTRACTION, OR OTHER FACTORS ACTING UPON THE BUILDING JOINTS.

H. REFER TO SPEC SECTIONS 07 05 23, 07 27 10.00 10, 07 27 19.01 & 07 27 26 FOR ADDITIONAL AIR BARRIER RELATED INFORMATION.

LEGEND

AIR BARRIER LOCATION

AIR BARRIER SQUARE FOOTAGE

AREA	SQ/FT
NORTH ELEVATION	2,759
SOUTH ELEVATION	2,759
EAST ELEVATION	1,456
WEST ELEVATION	1,456
FIRST FLOOR	11,142
ROOF	11,142

0 8' 16' 32' 48'
1/16" = 1'-0"

0 4' 8' 16' 24'
1/8" = 1'-0"

SYM	DESCRIPTION	DATE	APPR

NAVFAC

COMMONWEALTH OF VIRGINIA
PETER SOUKAS
Lic. No. 401017157
6/23/2025
ARCHITECT
SEAL

Jacobs
1100 NORTH GLEBE ROAD
SUITE 500
ARLINGTON, VIRGINIA 22201
571.218.1000
FAX: 571.218.1600
A/E INFO

APPROVED
FOR COMMANDER NAVFAC 8/14/2025

ACTIVITY
APPROVED BY LCDR ELIZABETH OLOKODE NAVFAC NLON FEAD DIRECTOR NEW LONDON, GROTON, CT

SATISFACTORY TO DATE 05/27/2025

DES	PS	DRW PS	CHK WS
PM/DM	SMS/ CWJ		
BRANCH MANAGER	DJD		
CHIEF ENG/ARCH	JWJ		
FIRE PROTECTION	HPN		

DEPARTMENT OF THE NAVY
NAVAL FACILITIES ENGINEERING SYSTEMS COMMAND
MID-ATLANTIC
NAVAL FACILITIES ENGINEERING SYSTEMS COMMAND - MID-ATLANTIC
NAVAL STATION - NORFOLK, VA
NAVAL SUBMARINE BASE NEW LONDON
GROTON, CONNECTICUT
P-1102 WEAPONS MAGAZINE & ORDNANCE OPERATIONS FACILITY
OPERATIONS
ARCHITECTURAL AIR BARRIER INFORMATION

SCALE: AS NOTED
EPROJECT NO.: 1667770
CONSTR. CONTR. NO.
NAVFAC DRAWING NO. 12893974
SHEET 24 OF 140

A-003

6/20/2025 10:32:16 AM A-003
\\dc1vs01\fleet\PROJECTS\28\ARCH\BLDG-1667770-A-BIM.rvt

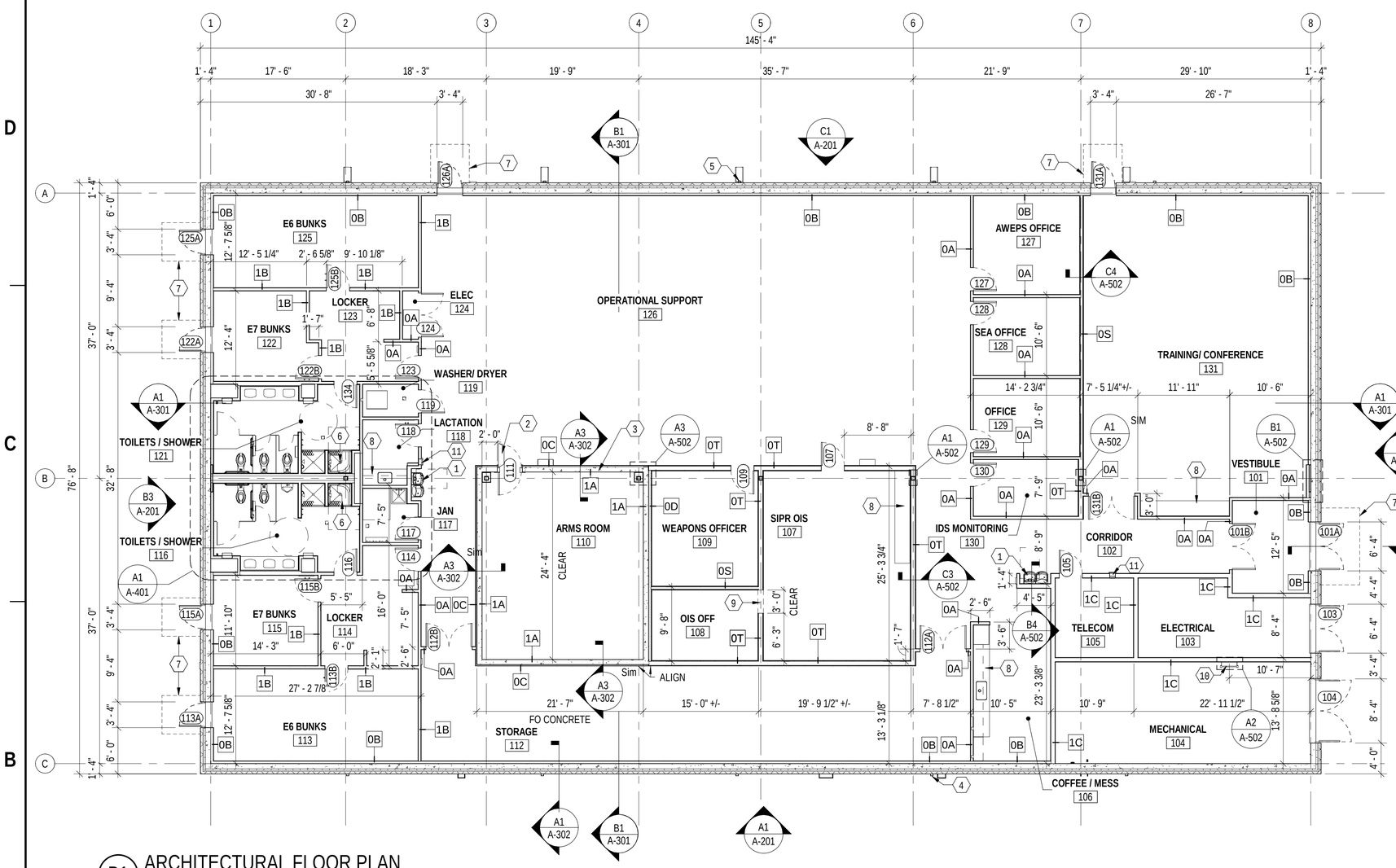

B1 ARCHITECTURAL FLOOR PLAN

1/8" = 1'-0"

GENERAL SHEET NOTES

A. LOCATE EDGE OF DOOR JAMBS 6" OFF THE FINISHED FACE OF ADJACENT GYPSUM BOARD PARTITION UNLESS OTHERWISE NOTED.
B. EXTERIOR DIMENSIONS ARE FROM CONCRETE AND ROUGH OPENINGS. DIMENSION STRINGS ON ENDS OF BUILDING ARE TO OUTSIDE FINISH MATERIAL.
C. INTERIOR DIMENSIONS ARE FROM METAL STUD TO METAL STUD, OR CONCRETE UNLESS NOTED OTHERWISE.
D. DIFFERENT FLOOR FINISH MATERIALS MUST MEET UNDER THE CENTERLINES OF DOORS UNLESS OTHERWISE NOTED.
E. PARTITION / WALL MOUNTED EQUIPMENT NOT INDICATED ON THE DRAWINGS MUST BE COORDINATED WITH THE COR PRIOR TO INSTALLATION.
F. INSTALLED FLOOR FINISHES MUST BE PROTECTED FROM DIRECT CONTACT BY MEANS OF COVERING FOR DURATION OF CONSTRUCTION.
G. CORRIDORS, BREAK, OPERATIONAL SUPPORT, AND TRAINING/ CONFERENCE ROOMS MUST HAVE ABUSE RESISTANT GYPSUM BOARD
H. REFER TO ENLARGED PLANS FOR PARTITION TYPES WITHIN TOILET/ SHOWER ROOMS
I. PROVIDE WALL MARKING AND IDENTIFICATION FOR FIRE AND SMOKE BARRIERS IN ACCORDANCE WITH NFPA 101

SHEET KEYNOTES

1. ABA COMPLIANT HIGH/ LOW DRINKING FOUNTAINS W/ BOTTLE FILLING STATION
2. GSA CLASS 5 VAULT W/ DAY GATE
3. 8" CAST-IN-PLACE CONCRETE WALL
4. DOWNSPOUT (MTL-3), TYP
5. DOWNSPOUT (MTL-3) W/ CONCRETE SPLASHBLOCK, TYP
6. ABA COMPLIANT SHOWER W/ GRAB BARS AND BENCH
7. DELEGATED DESIGN, PRE-MANUFACTURED, PREFINISHED METAL CANOPY (ABOVE)
8. CASEWORK, REFER TO INTERIORS
9. 3' X 7' GYPSUM BOARD OPENING
10. OSHA COMPLIANT ROOF ACCESS LADDER
11. SEMI-RECESSED FIRE EXTINGUISHER CABINET

0 4' 8' 16' 24'
1/8" = 1'-0"

PLAN NORTH

SYM	DESCRIPTION	DATE	APPR

NAVFAC

COMMONWEALTH OF VIRGINIA
PETER SOUKAS
Lic. No. 401017157
6/23/2025
ARCHITECT
SEAL

Jacobs
1100 NORTH GLEBE ROAD
SUITE 500
ARLINGTON, VIRGINIA 22201
571.218.1000
FAX: 571.218.1600

A/E INFO

APPROVED
FOR COMMANDER NAVFAC 8/14/2025

ACTIVITY
APPROVED BY LCDR ELIZABETH OLOKODE NAVFAC N.ON FEAD DIRECTOR NEW LONDON, GROTON, CT

SATISFACTORY TO DATE	05/27/2025		
DES	PS	DRW PS	CHK WS
PM/DM	SMS/ CWJ		
BRANCH MANAGER	DJD		
CHIEF ENG/ARCH	JWJ		
FIRE PROTECTION	HPN		

DEPARTMENT OF THE NAVY
NAVAL FACILITIES ENGINEERING SYSTEMS COMMAND - MID-ATLANTIC
MID-ATLANTIC
NAVAL FACILITIES ENGINEERING SYSTEMS COMMAND
NAVAL STATION, NORFOLK, VA
NAVAL SUBMARINE BASE NEW LONDON
GROTON, CONNECTICUT
P-1102 WEAPONS MAGAZINE & ORDNANCE OPERATIONS FACILITY
OPERATIONS
ARCHITECTURAL FLOOR PLAN

SCALE:	AS NOTED
EPROJECT NO.:	1667770
CONSTR. CONTR. NO.	
NAVFAC DRAWING NO.	12893975
SHEET	25 OF 140

A-101

6/20/2025 10:32:22 AM A-101
\\DC1-vs01\Revit\PROJECTS\1629\ARCHIBUS\C-1667770-A-BIM.rvt

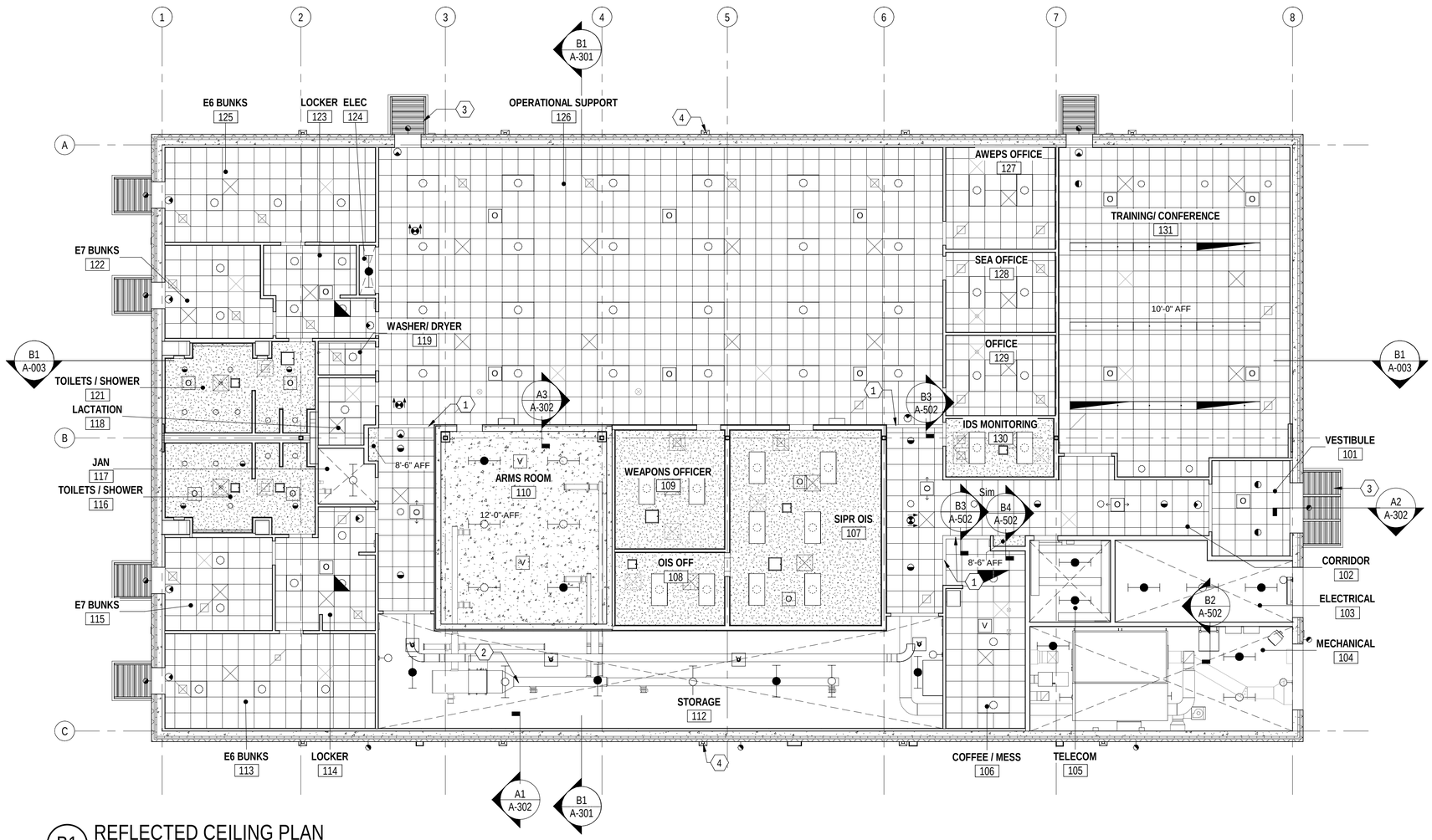

B1 REFLECTED CEILING PLAN
1/8" = 1'-0"

GENERAL SHEET NOTES

A. REFER TO PLUMBING, MECHANICAL, ELECTRICAL, FIRE SUPPRESSION, FIRE ALARM AND TELECOMMUNICATION DRAWINGS FOR VENTS, SPRINKLER HEADS, GRILLES, REGISTERS, DIFFUSERS, DUCTS, LIGHTS, DETECTORS, ETC AND COORDINATE BETWEEN DISCIPLINES.
B. CEILING HEIGHTS AT 9'-0" AFF, UON.
C. CENTER CEILING MOUNTED FIXTURES (SPRINKLER HEADS, SMOKE AND HEAT DETECTORS, OCCUPANCY SENSORS, ETC.) UON.
D. GYPSUM BOARD BULKHEADS AT 8'-6" AFF, UON.
E. PROVIDE MOISTURE RESISTANT GYPSUM BOARD AT WET LOCATIONS
F. REFER TO ARCHITECTURAL REFLECTED CEILING PLANS FOR THE GENERAL INTENDED LAYOUTS OF MECHANICAL AND ELECTRICAL AS THEY OCCUR WITHIN THE FINISH CEILING SYSTEM.

SHEET KEYNOTES

1 GYPSUM BOARD BULKHEAD
2 MECHANICAL EQUIPMENT, TYP. REFER TO MECHANICAL
3 DELEGATED DESIGN, PRE-MANUFACTURED, PREFINISHED METAL CANOPY (MTL-2), TYP
4 DOWNSPOUT (MTL-3), TYP

REFLECTED CEILING PLAN LEGEND

SYMBOL	DESCRIPTION
	AREA NOT IN CONTRACT
	CONCRETE CEILING (ARMORY AREAS ONLY)
	WIRE MESH CEILING (STORAGE AREA)
	NO CEILING - EXPOSED TO ROOF DECK ABOVE
	2' - 0" X 2' - 0" ACOUSTICAL CEILING TILE
	GYPSUM BOARD CEILING.
(X'-X")	FINISHED CEILING HEIGHT ABOVE FINISHED FLOOR
	LIGHT FIXTURE - REFER TO ELECTRICAL DRAWINGS
	EMERGENCY LIGHT FIXTURE - REFER TO ELECTRICAL DRAWINGS
	EXIT SIGN - REFER TO ELECTRICAL DRAWINGS
O V	OCCUPANCY/ VACANCY SENSOR. REFER TO ELECTRICAL DRAWINGS.
	CEILING SUPPLY DIFFUSER. REFER TO MECHANICAL DRAWINGS.
	CEILING RETURN OR EXHAUST. REFER TO MECHANICAL DRAWINGS.
	ACCESS PANELS - 12" X 12", 18" X 18". COORDINATE LOCATION WITH MECHANICAL EQUIPMENT. SHOWN FOR REFERENCE

0 4' 8' 16' 24'
1/8" = 1'-0"

PLAN NORTH

SYM	DESCRIPTION	DATE	APPR

NAVFAC

COMMONWEALTH OF VIRGINIA
PETER SOUKAS
Lic. No. 401017157
6/23/2025
ARCHITECT
SEAL

Jacobs
1100 NORTH GLEBE ROAD
SUITE 500
ARLINGTON, VIRGINIA 22201
571.218.1000
FAX: 571.218.1600

A/E INFO

APPROVED
FOR COMMANDER NAVFAC 8/14/2025

ACTIVITY
APPROVED BY LCDR ELIZABETH OLOKODE NAVFAC NLON FEAD DIRECTOR NEW LONDON, GROTON, CT

SATISFACTORY TO DATE	05/27/2025
DES PS DRW PS CHK WS	
PMDM	SMS/ CWJ
BRANCH MANAGER	DJD
CHIEF ENG/ARCH	JWJ
FIRE PROTECTION	HPN

DEPARTMENT OF THE NAVY
NAVAL FACILITIES ENGINEERING SYSTEMS COMMAND
MID-ATLANTIC
NAVAL FACILITIES ENGINEERING SYSTEMS COMMAND - MID-ATLANTIC
NAVAL STATION - NORFOLK, VA
NAVAL SUBMARINE BASE NEW LONDON
GROTON, CONNECTICUT
P-1102 WEAPONS MAGAZINE & ORDNANCE OPERATIONS FACILITY
OPERATIONS
ARCHITECTURAL REFLECTED CEILING PLAN

SCALE:	AS NOTED
EPROJECT NO.:	1667770
CONSTR. CONTR. NO.	
NAVFAC DRAWING NO.	12893976
SHEET	26 OF 140

A-102

6/20/2025 10:32:27 AM A-102
\\dc1vs01\Hdsp\FOZE1629\ARCHBLDG-1667770-A-BIM.rvt

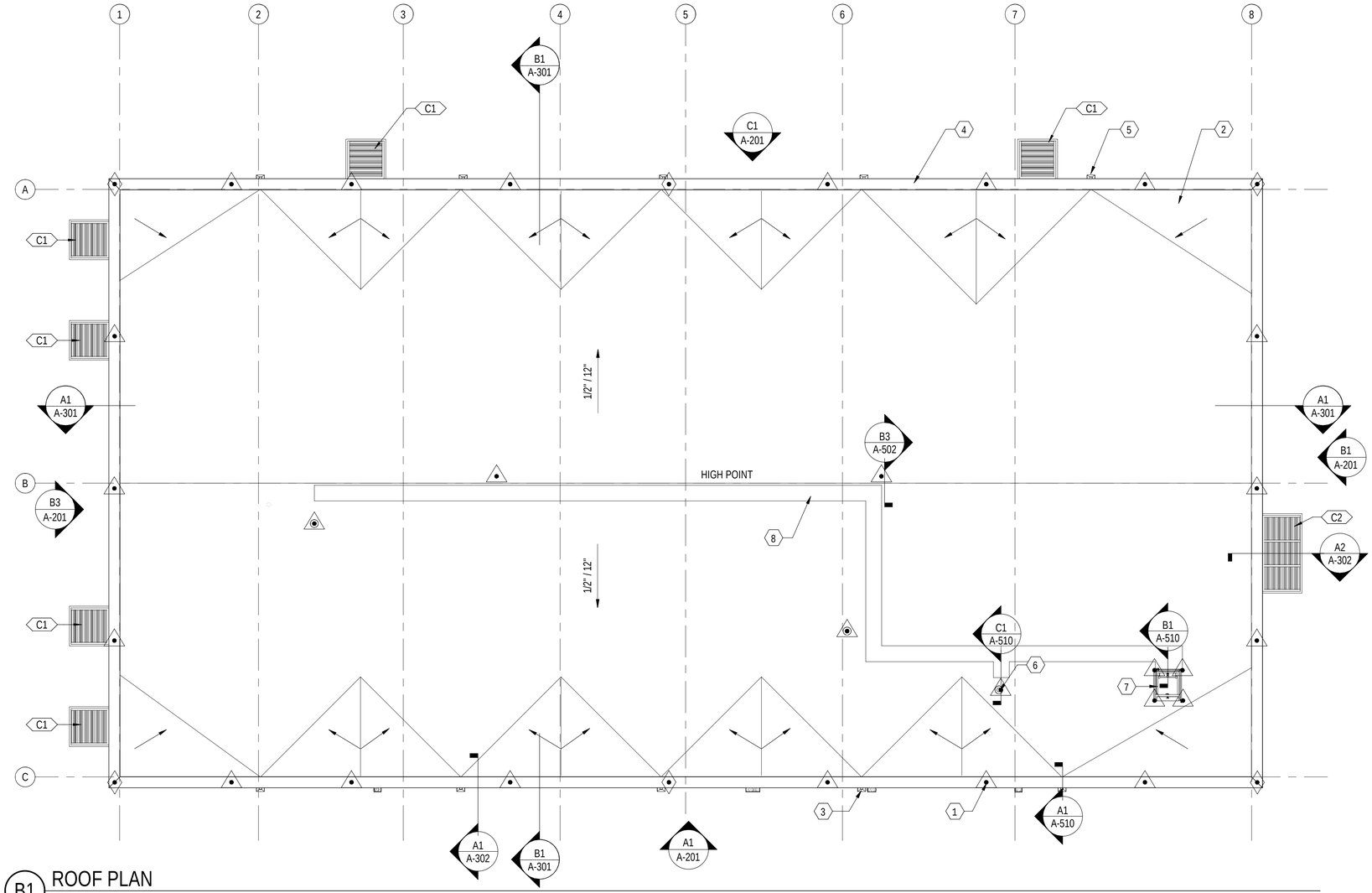

B1 ROOF PLAN
1/8" = 1'-0"

GENERAL SHEET NOTES

A. ROOF IS A FULLY ADHERED TPO ROOFING SYSTEM.
B. ROOF SYSTEMS MUST BE FURNISHED AND INSTALLED PER ROOF MANUFACTURER'S INSTRUCTIONS AND STANDARDS.
C. STAGGER ROOF INSULATION JOINTS. INSULATION JOINTS GREATER THAN 1/4" MUST BE FILLED WITH INSULATION STRIPS.
D. ROOF MUST HAVE A CONTINUOUS MINIMUM VALUE OF R-35 INSULATION.
E. CRICKET SLOPE MUST BE 1" PER 1'-0".

SHEET KEYNOTES

1 LIGHTNING PROTECTION, TYP. REFER TO ELECTRICAL
2 ROOF CRICKET, TYP
3 DOWNSPOUT (MTL-3), TYP
4 PREFINISHED SLOPED METAL COPING (MTL-1)
5 THROUGH WALL SCUPPER W/ CONDUCTOR HEAD, TYP
6 PIPE PENETRATION, TYP
7 OSHA COMPLIANT 30" X 37" SINGLE-LEAF ROOF HATCH W/ SAFETY RAILS AND GATE
8 NON-SLIP WALKWAY PAD PER ROOFING MFR

0 4' 8' 16' 24'
1/8" = 1'-0"

PLAN NORTH

SYM	DESCRIPTION	DATE	APPR

NAVFAC

COMMONWEALTH OF VIRGINIA
PETER SOUKAS
Lic. No. 401017157
6/23/2025
ARCHITECT
SEAL

Jacobs
1100 NORTH GLEBE ROAD
SUITE 500
ARLINGTON, VIRGINIA 22201
571.218.1000
FAX: 571.218.1600

A/E INFO

APPROVED
FOR COMMANDER NAVFAC 8/14/2025
ACTIVITY
APPROVED BY LCDR ELIZABETH OLOKODE NAVFAC N.LON FEAD DIRECTOR NEW LONDON, GROTON, CT
SATISFACTORY TO DATE 05/27/2025

DES	PS	DRW	PS	CHK	WS
PM/DM	SMS/ CWJ				
BRANCH MANAGER	DJD				
CHIEF ENG/ARCH	JWJ				
FIRE PROTECTION	HPN				

DEPARTMENT OF THE NAVY
NAVAL FACILITIES ENGINEERING SYSTEMS COMMAND
MID-ATLANTIC
NAVAL FACILITIES ENGINEERING SYSTEMS COMMAND - MID-ATLANTIC
NAVAL STATION - NORFOLK, VA
NAVAL SUBMARINE BASE NEW LONDON
GROTON, CONNECTICUT
P-1102 WEAPONS MAGAZINE & ORDNANCE OPERATIONS FACILITY
OPERATIONS
ARCHITECTURAL ROOF PLAN

SCALE: AS NOTED
EPROJECT NO.: 1667770
CONSTR. CONTR. NO.
NAVFAC DRAWING NO. 12893977
SHEET 27 OF 140
A-103

6/20/2025 10:32:31 AM A-103
\\ac1vsc01\fedgis\PD2E1639\ARCH\BLDG-1667770-A-BIM.rvt

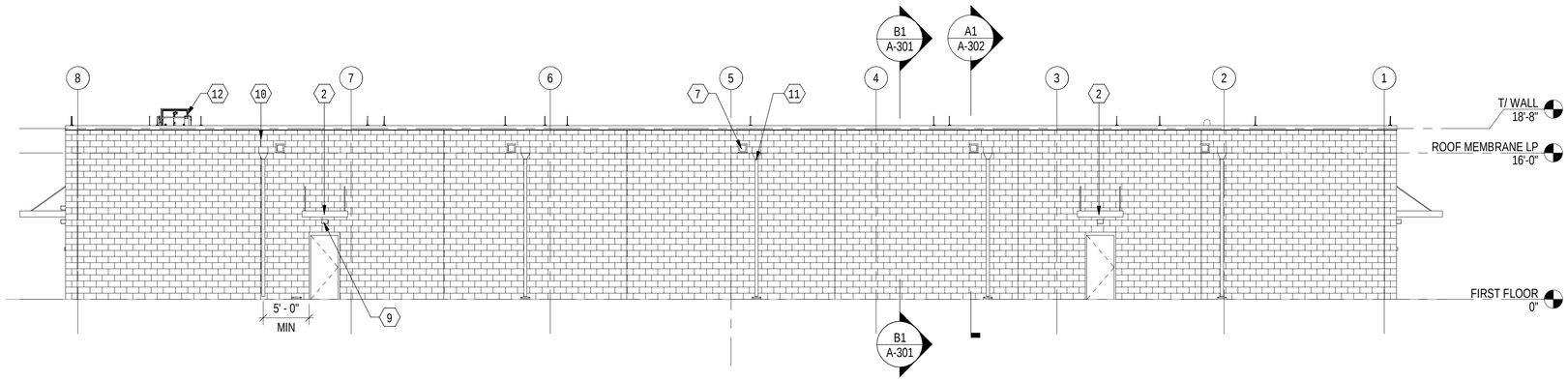

C1 BLDG ELEVATION - NORTH

1/8" = 1'-0" (A-101)

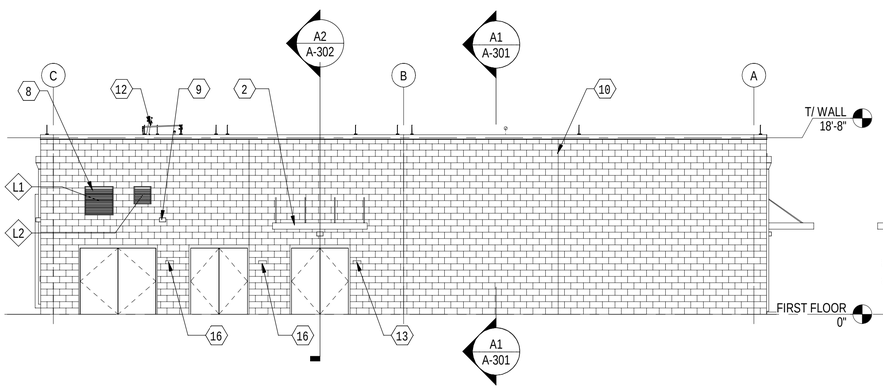

B1 BLDG ELEVATION - EAST

1/8" = 1'-0" (A-101)

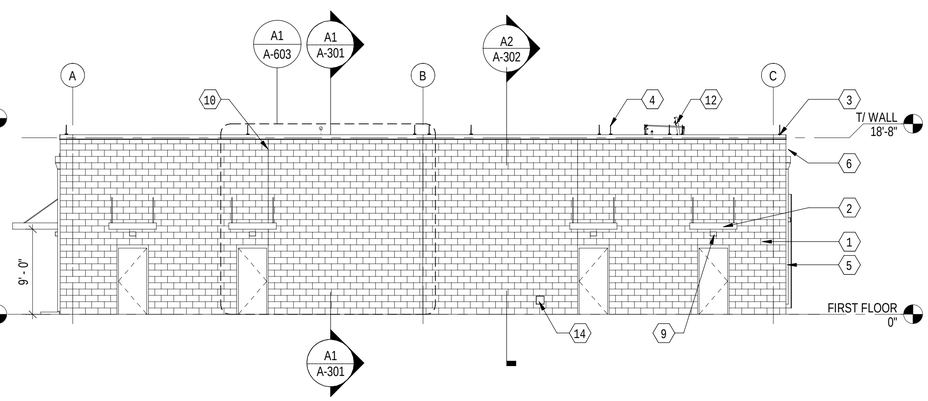

B3 BLDG ELEVATION - WEST

1/8" = 1'-0" (A-101)

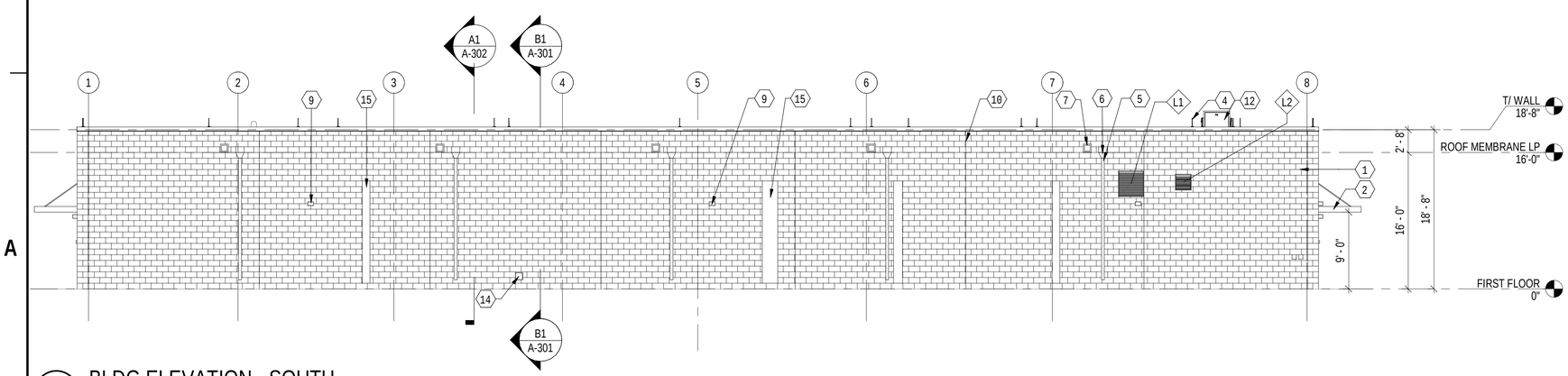

A1 BLDG ELEVATION - SOUTH

1/8" = 1'-0" (A-101)

GENERAL SHEET NOTES

A. DOWNSPOUT DISCHARGE - NORTH ELEVATION TO DISHCARGE ONTO CONCRETE SPLASHBLOCK, SOUTH ELEVATION TO CONNECTED TO UNDERGROUND PIPING
B. REFER TO SHEET A-603 FOR EXTERIOR FINISHES AND ARCHITECTURAL CMU PATTERN, FINISH, AND COLOR
C. REFER TO SHEET A-601 FOR LOUVER SCHEDULE AND DETAILS

SHEET KEYNOTES

1 ARCHITECTURAL CMU
2 DELEGATED DESIGN, PRE-MANUFACTURED, PREFINISHED METAL CANOPY (MTL-2), TYP
3 PREFINISHED SLOPED METAL COPING (MTL-1)
4 LIGHTNING PROTECTION, TYP. REFER TO ELECTRICAL
5 DOWNSPOUT (MTL-3), TYP
6 CONDUCTOR HEAD, TYP
7 OVERFLOW SCUPPER. LOCATE 2" ABOVE ROOF SURFACE, TYP
8 36" X 36" LOUVER
9 EXTERIOR LIGHTING, TYP
10 CONTROL JOINT, TYP
11 DOWNSPOUT (MTL-3) W/ CONCRETE SPLASHBLOCK, TYP
12 OSHA COMPLIANT 30" X 37" SINGLE-LEAF ROOF HATCH W/ SAFETY RAILS AND GATE (HATCH IN OPEN POSITION)
13 EXTERIOR BUILDING SIGNAGE
14 HOSE BIB CENTERED ON SINGULAR ARCHITECTURAL BLOCK, TYP, REFER TO PLUMBING.
15 GALVANIZED STEEL COVER AROUND REFRIGERANT PIPING, TYP. REFER TO MECHANICAL. FINISH TO MATCH METAL COPING
16 EXTERIOR ROOM NAME SIGNAGE

0 4' 8' 16' 24'
1/8" = 1'-0"

SYM	DESCRIPTION	DATE	APPR

NAVFAC

COMMONWEALTH OF VIRGINIA
PETER SOUKAS
Lic. No. 401017157
6/18/2025
ARCHITECT
SEAL

Jacobs
1100 NORTH GLEBE ROAD
SUITE 500
ARLINGTON, VIRGINIA 22201
571.218.1000
FAX: 571.218.1600

A/E INFO

APPROVED
FOR COMMANDER NAVFAC 8/14/2025

ACTIVITY
APPROVED BY LCDR ELIZABETH OLOKODE NAVFAC NLON FEAD DIRECTOR NEW LONDON, GROTON, CT

SATISFACTORY TO DATE	05/27/2025
DES PS / DRW PS / CHK WS	
PM/DM	SMS/ CWJ
BRANCH MANAGER	DJD
CHIEF ENG/ARCH	JWJ
FIRE PROTECTION	HPN

DEPARTMENT OF THE NAVY
NAVAL FACILITIES ENGINEERING SYSTEMS COMMAND - MID-ATLANTIC
MID-ATLANTIC
NAVAL FACILITIES ENGINEERING SYSTEMS COMMAND
NAVAL STATION - NORFOLK, VA
NAVAL SUBMARINE BASE NEW LONDON
GROTON, CONNECTICUT
P-1102 WEAPONS MAGAZINE & ORDNANCE OPERATIONS FACILITY
OPERATIONS
ARCHITECTURAL BUILDING ELEVATIONS

SCALE:	AS NOTED
EPROJECT NO.:	1667770
CONSTR. CONTR. NO.	
NAVFAC DRAWING NO.	12893978
SHEET	28 OF 140

A-201

6/20/2025 10:32:40 AM A-201
\\uc1vs01\eupr\PROJECTS\28\ARCH\BLDG-1667770-A-BIM.rvt

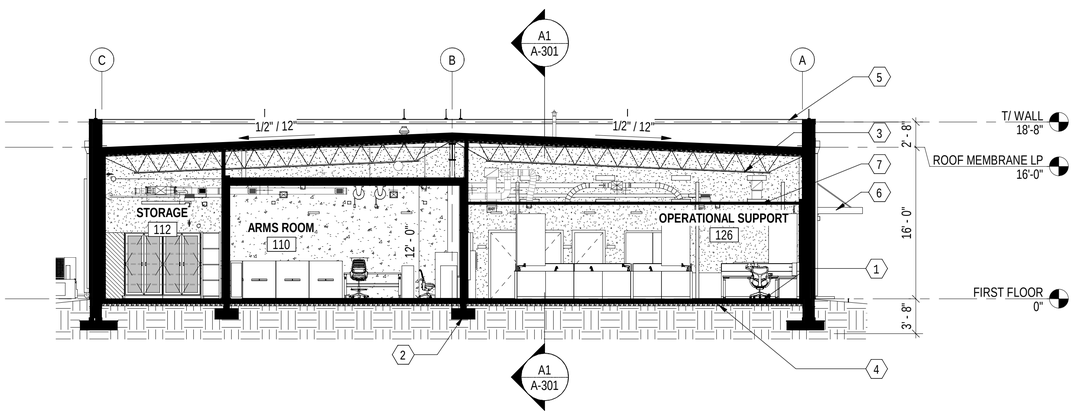

B1 NORTH-SOUTH BUILDING SECTION

1/8" = 1'-0" (A-101)

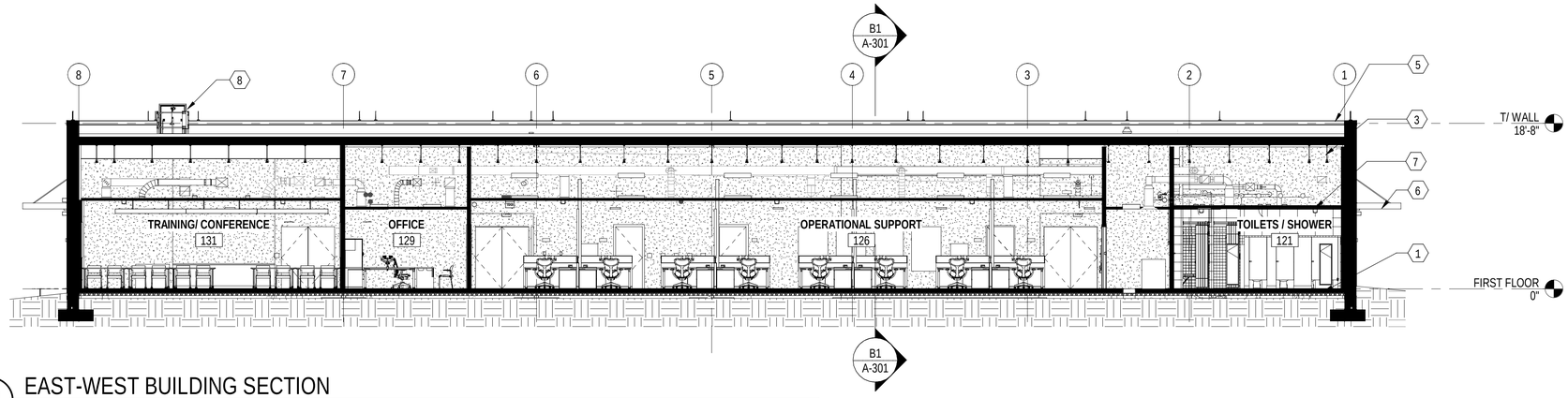

A1 EAST-WEST BUILDING SECTION

1/8" = 1'-0" (A-101)

0 4' 8' 16' 24'

1/8" = 1'-0"

GENERAL SHEET NOTES

A. REFER TO OTHER DISCIPLINES FOR ADDITIONAL INFORMATION

SHEET KEYNOTES

1 CONCRETE SLAB, REFER STRUCTURAL
2 CONCRETE FOOTING, REFER TO STRUCTURAL
3 STRUCTURAL STEEL FRAMING, REFER TO STRUCTURAL
4 GRAVEL
5 PREFINISHED SLOPED METAL COPING (MTL-1)
6 DELEGATED DESIGN, PRE-MANUFACTURED, PREFINISHED METAL CANOPY (MTL-2), TYP
7 SCHEDULED CEILING
8 OSHA COMPLIANT 30" X 37" SINGLE-LEAF ROOF HATCH W/ SAFETY RAILS AND GATE

SYM	DESCRIPTION	DATE	APPR

NAVFAC

COMMONWEALTH OF VIRGINIA
PETER SOUKAS
Lic. No. 401017157
6/18/2025
ARCHITECT
SEAL

Jacobs
1100 NORTH GLEBE ROAD
SUITE 500
ARLINGTON, VIRGINIA 22201
571.218.1000
FAX: 571.218.1600
A/E INFO

APPROVED
FOR COMMANDER NAVFAC 8/14/2025

ACTIVITY:
APPROVED BY LCDR ELIZABETH OLOKODE NAVFAC NLON FEAD DIRECTOR NEW LONDON, GROTON, CT

SATISFACTORY TO DATE 05/27/2025

DES	PS	DRW PS	CHK WS
PM/DM	SMS/ CWJ		
BRANCH MANAGER	DJD		
CHIEF ENG/ARCH	JWJ		
FIRE PROTECTION	HPN		

DEPARTMENT OF THE NAVY
NAVAL FACILITIES ENGINEERING SYSTEMS COMMAND - MID-ATLANTIC
MID-ATLANTIC
NAVAL FACILITIES ENGINEERING SYSTEMS COMMAND
NAVAL STATION - NORFOLK, VA
NAVAL SUBMARINE BASE NEW LONDON
GROTON, CONNECTICUT
P-1102 WEAPONS MAGAZINE & ORDNANCE OPERATIONS FACILITY
OPERATIONS
ARCHITECTURAL BUILDING SECTIONS

SCALE: AS NOTED
EPROJECT NO.: 1667770
CONSTR. CONTR. NO.
NAVFAC DRAWING NO. 12893979
SHEET 29 OF 140

A-301

6/20/2025 10:32:51 AM A-301
\\dc1-vs01\edp\FDZE\E628\ARCH\BLDG-1667770-A-BIM.rvt

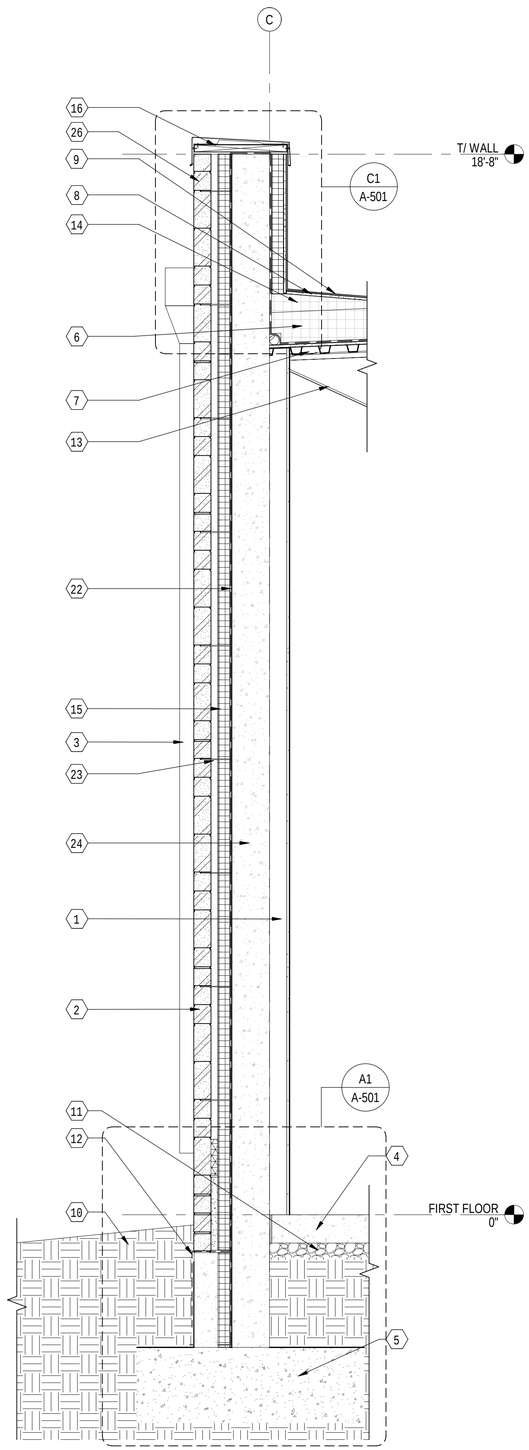

A1 WALL SECTION - TYPICAL

3/4" = 1'-0" (A-101)

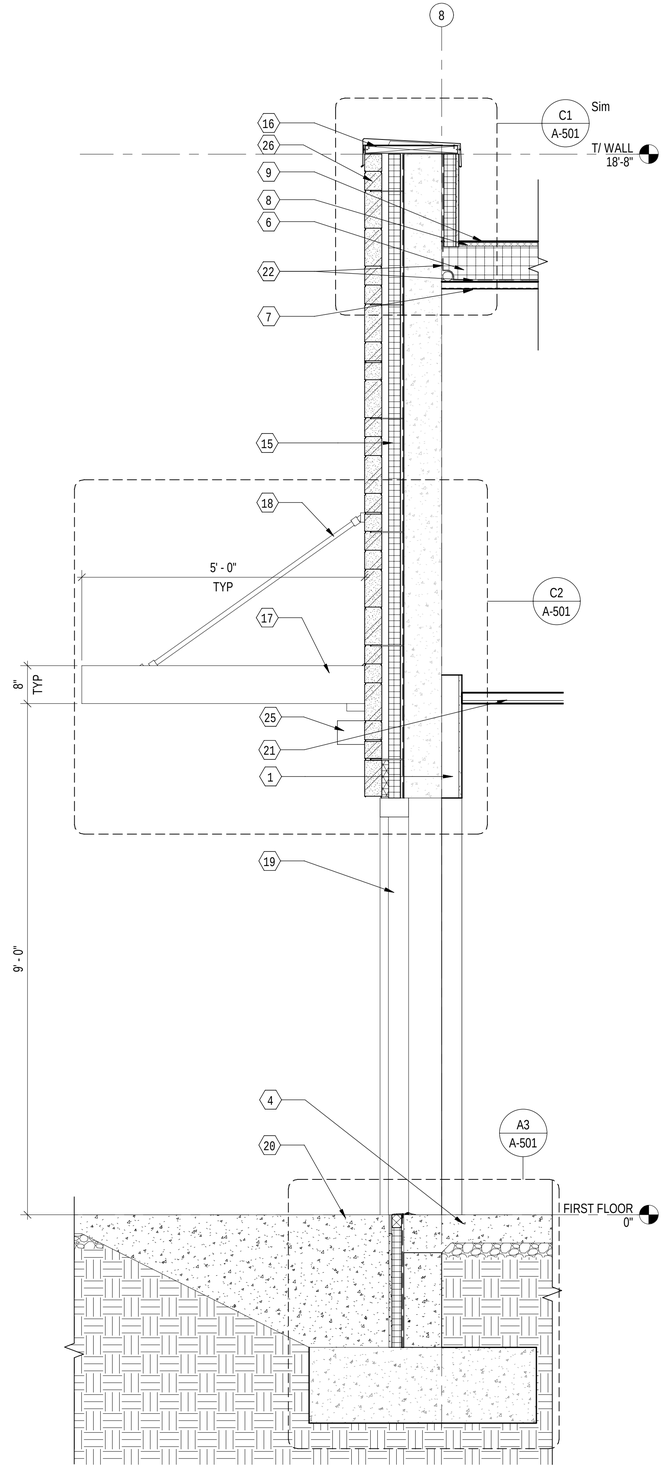

A2 WALL SECTION - ENTRY

3/4" = 1'-0" (A-101)

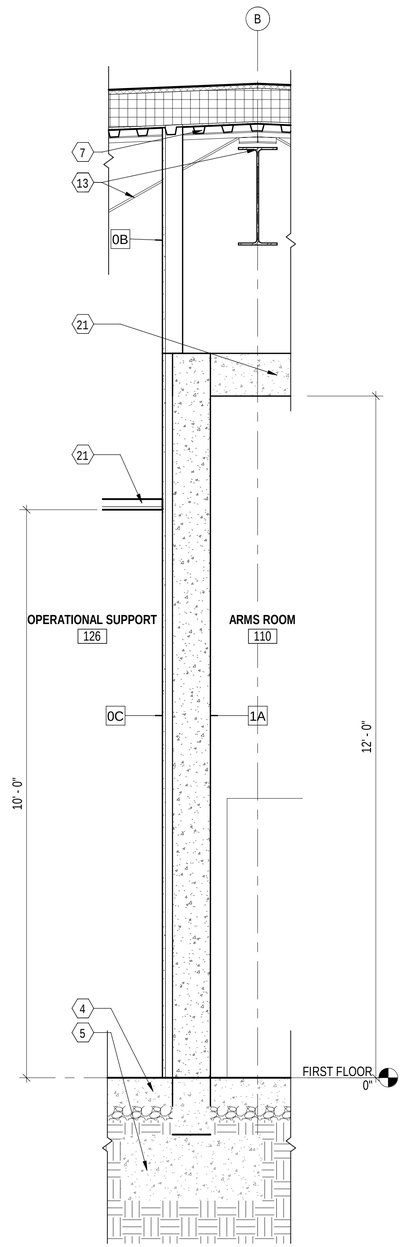

A3 WALL SECTION - ARMS TYPICAL

3/4" = 1'-0" (A-101)

0 6" 1' 2' 4'

3/4" = 1'-0"

GENERAL SHEET NOTES

A. PER IBC 2603.5.5 THE EXTERIOR WALL ASSEMBLY IS EXEMPT FROM BEING TESTED IN ACCORDANCE WITH AND COMPLY WITH THE ACCEPTANCE CRITERIA OF NFPA 285. THE ORDANANCE BUILDING IS A ONE STORY BUILDING COMPLYING WITH IBC SECTION 2603.4.1.4.

B. REFER TO STRUCTURAL FOR ADDITIONAL INFORMATION.

SHEET KEYNOTES

1 SCHEDULED PARTITION
2 ARCHITECTURAL CMU
3 DOWNSPOUT (BEYOND)
4 CONCRETE SLAB, REFER STRUCTURAL
5 CONCRETE FOOTING, REFER TO STRUCTURAL
6 R-35 CONT RIGID INSULATION
7 METAL ROOF DECK, REFER TO STRUCTURAL
8 5/8" COVER BOARD
9 FULLY ADHERED TPO MEMBRANE
10 GRADE, REFER TO CIVIL
11 COMPACTED GRAVEL SUB-BASE, REFER TO STRUCTURAL
12 DAMPPROOFING
13 STRUCTURAL STEEL FRAMING, REFER TO STRUCTURAL
14 TAPERED INSULATION BOARD AT CRICKET LOCATIONS
15 R-13.3 FOIL-FACED CONT RIGID INSULATION
16 PREFINISHED SLOPED METAL COPING (MTL-1)
17 DELEGATED DESIGN, PRE-MANUFACTURED, PREFINISHED METAL CANOPY (MTL-2), TYP
18 1" HANGAR PIPE ASSEMBLY W/ THREADED ADJUSTED ROD
19 HOLLOW METAL DOOR
20 CONCRETE SIDEWALK (SLOPE AWAY FROM BUILDING), REFER TO CIVIL
21 SCHEDULED CEILING
22 AIR BARRIER/ VAPOR RETARDER
23 THERMALLY BROKEN VENEER ANCHOR, TYP
24 CAST-IN-PLACE 8" CONCRETE
25 EXTERIOR LIGHTING, TYP
26 WEEP VENT INSERTS AT 24" OC

SYM	DESCRIPTION	DATE	APPR

NAVFAC

COMMONWEALTH OF VIRGINIA
PETER SOUKAS
Lic. No. 401017157
6/23/2025
ARCHITECT
SEAL

Jacobs
1100 NORTH GLEBE ROAD
SUITE 500
ARLINGTON, VIRGINIA 22201
571.218.1000
FAX: 571.218.1600

A/E INFO

APPROVED
FOR COMMANDER NAVFAC 8/14/2025

ACTIVITY:
APPROVED BY LCDR ELIZABETH OLOKODE NAVFAC NLON FEAD DIRECTOR NEW LONDON, GROTON, CT

SATISFACTORY TO DATE	05/27/2025
DES PS / DRW PS / CHK WS	
PM/DM	SMS/ CWJ
BRANCH MANAGER	DJD
CHIEF ENG/ARCH	JWJ
FIRE PROTECTION	HPN

DEPARTMENT OF THE NAVY
NAVAL FACILITIES ENGINEERING SYSTEMS COMMAND - MID-ATLANTIC
MID-ATLANTIC
NAVAL FACILITIES ENGINEERING SYSTEMS COMMAND
NAVAL STATION - NORFOLK, VA
NAVAL SUBMARINE BASE NEW LONDON
GROTON, CONNECTICUT
P-1102 WEAPONS MAGAZINE & ORDNANCE OPERATIONS FACILITY
OPERATIONS
ARCHITECTURAL WALL SECTIONS

SCALE:	AS NOTED
EPROJECT NO.:	1667770
CONSTR. CONTR. NO.	
NAVFAC DRAWING NO.	12893980
SHEET	30 OF 140

A-302

6/20/2025 10:32:55 AM A-302
\\dc1-vs01\edp\FDZE\E628\ARCH\BLDG-1667770-A-BIM.rvt

TOILET / BATH ACCESSORIES (TBA) SCHEDULE

ITEM #	DESCRIPTION	FINISH	REMARKS
TBA-01	GRAB BAR	STAINLESS STEEL	18" VERTICAL, 36", 42"
TBA-02	TOILET PARTITIONS		FLOOR MOUNTED, COAT HOOKS AT EACH DOOR
TBA-03	HOOK		
TBA-04	RECESSED PAPER TOWEL DISPENSER & WASTE RECEPTACLE		
TBA-05	SEAT COVER & TOILET TISSUE DISPENSER W/ SANITARY NAPKIN DISPOSAL - COMPARTMENT MOUNTED	STAINLESS STEEL	DUAL SIDED
TBA-06	SEAT COVER & TOILET TISSUE DISPENSER - COMPARTMENT MOUNTED	STAINLESS STEEL	DUAL SIDED
TBA-07	SHOWER ROD	STAINLESS STEEL	REFER TO INTERIORS FF&E EQUIPMENT EQ02 FOR SHOWER CURTAIN AND HOOKS
TBA-08	SOAP DISH	STAINLESS STEEL	
TBA-09	UTILITY SHELF W/ MOP/BROOM HOLDERS AND RAG HOOKS	STAINLESS STEEL	8"D X 34"W
TBA-10	FULL LENGTH MIRROR, WELDED FRAME	STAINLESS STEEL	
TBA-11	SEAT COVER & TOILET TISSUE DISPENSER W/ SANITARY NAPKIN DISPOSAL	STAINLESS STEEL	
TBA-12	TOILET MIRROR, WELDED FRAME	STAINLESS STEEL	84" W X 36"H

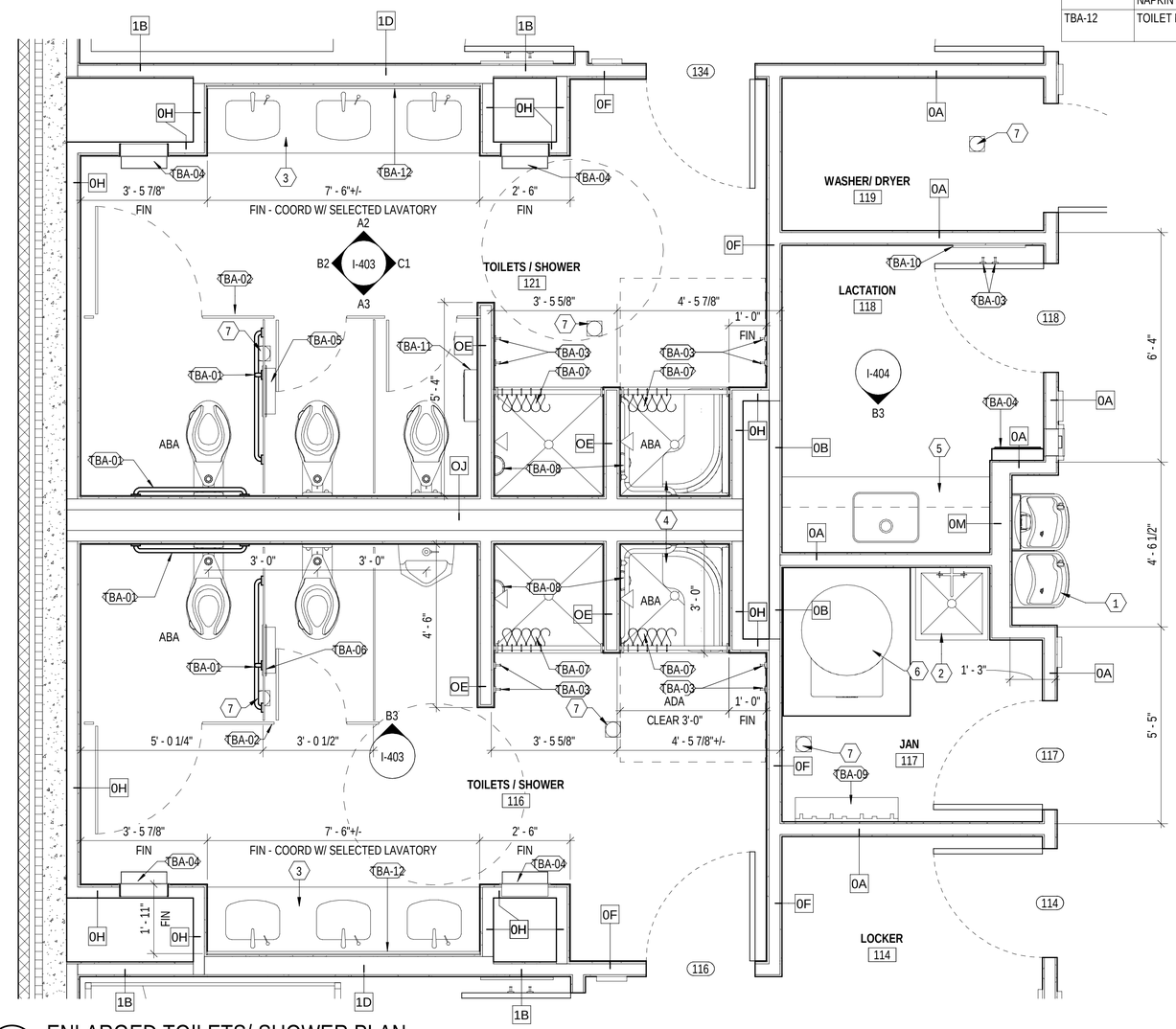

A1 ENLARGED TOILETS/ SHOWER PLAN

1/2" = 1'-0" (A-101)

GENERAL SHEET NOTES

A. INTERIOR DIMENSIONS ARE FROM METAL STUD TO METAL STUD, OR CONCRETE UNLESS NOTED OTHERWISE.
B. PARTITION / WALL MOUNTED EQUIPMENT NOT INDICATED ON THE DRAWINGS MUST BE COORDINATED WITH THE COR PRIOR TO INSTALLATION.
C. REFER TO SHEET A-002 FOR ACCESSIBILITY STANDARDS AND MOUNTING HEIGHTS.
D. REFER TO INTERIORS FOR INTERIOR FINISH AND FFE INFORMATION.

SHEET KEYNOTES

1 ABA COMPLIANT HIGH/ LOW DRINKING FOUNTAINS W/ BOTTLE FILLING STATION
2 STAINLESS STEEL MOP SINK
3 ABA COMPLIANT (3) STATION, MULTI-HEIGHT LAVATORY. SOLID SURFACE CONCAVE COUNTERTOP. INTEGRAL SOAP DISPENSER AT EACH STATION.
4 ABA COMPLIANT SHOWER W/ GRAB BARS AND BENCH
5 CASEWORK, REFER TO INTERIORS
6 WATER HEATER, REFER TO PLUMBING
7 FLOOR DRAIN, REFER TO PLUMBING

0 1' 2' 4' 6'
1/2" = 1'-0"

PLAN NORTH

SYM	DESCRIPTION	DATE	APPR

NAVFAC

COMMONWEALTH OF VIRGINIA
PETER SOUKAS
Lic. No. 401017157
6/18/2025
ARCHITECT
SEAL

Jacobs
1100 NORTH GLEBE ROAD
SUITE 500
ARLINGTON, VIRGINIA 22201
571.218.1000
FAX: 571.218.1600

A/E INFO
APPROVED
FOR COMMANDER NAVFAC 8/14/2025
ACTIVITY
APPROVED BY LCDR ELIZABETH OLOKODE NAVFAC NLON FEAD DIRECTOR NEW LONDON, GROTON, CT
SATISFACTORY TO DATE 05/27/2025

DES	PS	DRW	PS	CHK	WS

PM/DM	SMS/ CWJ
BRANCH MANAGER	DJD
CHIEF ENG/ARCH	JWJ
FIRE PROTECTION	HPN

DEPARTMENT OF THE NAVY
NAVAL FACILITIES ENGINEERING SYSTEMS COMMAND
MID-ATLANTIC
NAVAL FACILITIES ENGINEERING SYSTEMS COMMAND - MID-ATLANTIC
NAVAL STATION - NORFOLK, VA
NAVAL SUBMARINE BASE NEW LONDON
GROTON, CONNECTICUT
P-1102 WEAPONS MAGAZINE & ORDNANCE OPERATIONS FACILITY
OPERATIONS
ARCHITECTURAL ENLARGED PLANS

SCALE: AS NOTED
EPROJECT NO.: 1667770
CONSTR. CONTR. NO.
NAVFAC DRAWING NO. 12893981
SHEET 31 OF 140

A-401

6/20/2025 10:32:59 AM A-401
\\aexwsd1\depot\P02E1028\ARCH\BELDG-1667770-A-BIM.rvt

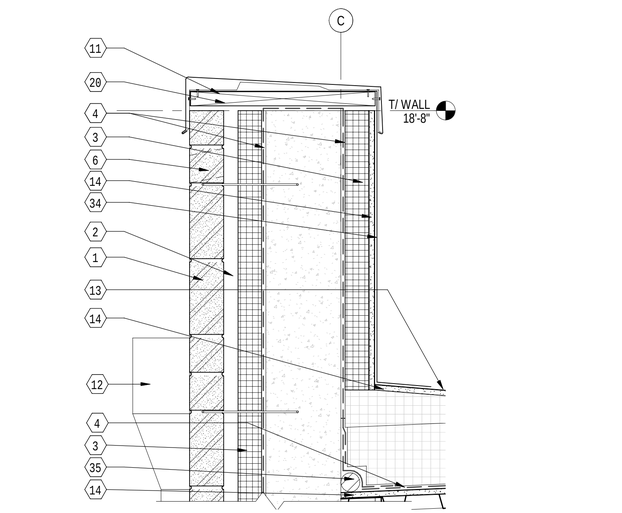

C1 COPING DETAIL
1 1/2" = 1'-0" (A-302)

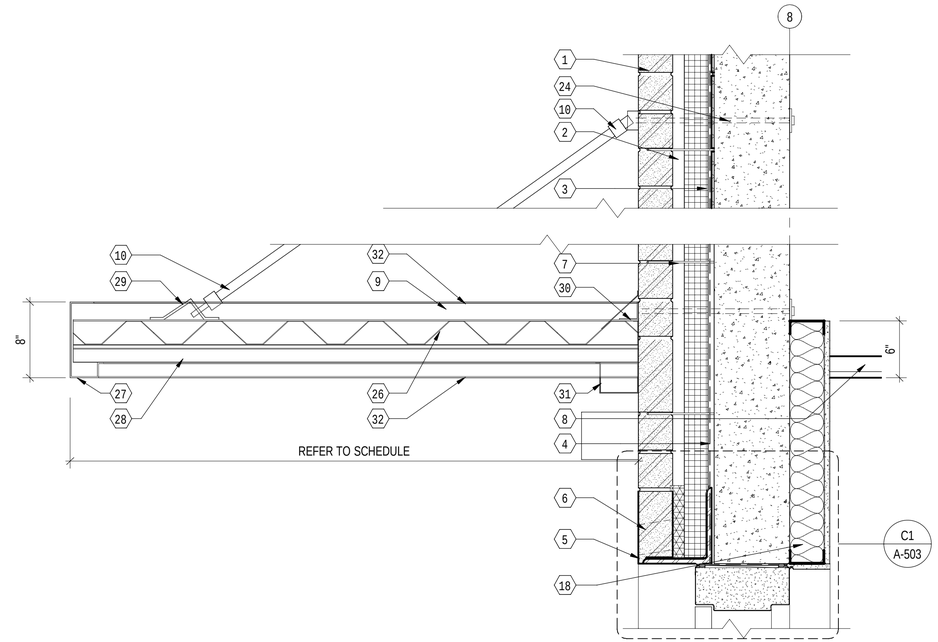

C2 CANOPY/ WALL DETAIL
1 1/2" = 1'-0" (A-302)

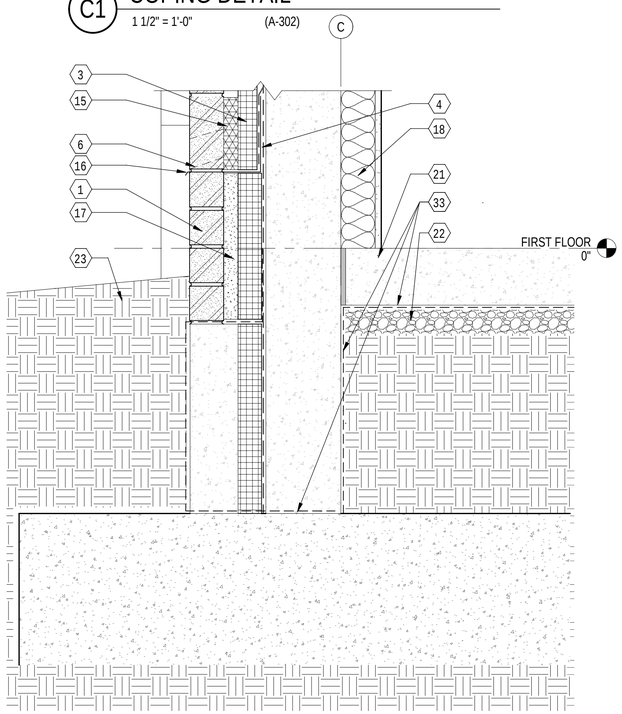

A1 FOUNDATION DETAIL
1 1/2" = 1'-0" (A-302)

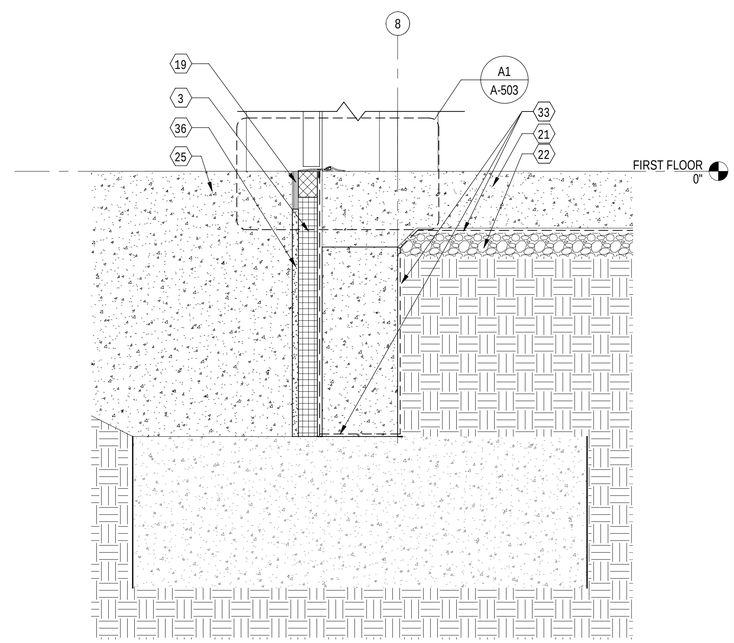

A3 ENTRY/ FOUNDATION DETAIL
1 1/2" = 1'-0" (A-302)

0 6" 1' 2'
1 1/2" = 1'-0"

SHEET KEYNOTES

1 ARCHITECTURAL CMU
2 AIRSPACE
3 R-13.3 FOIL-FACED CONT RIGID INSULATION
4 AIR BARRIER/ VAPOR RETARDER
5 LIPPED ARCHITECTURAL CMU
6 WEEP VENT INSERTS AT 24" OC
7 THERMALLY BROKEN VENEER ANCHOR, TYP
8 SCHEDULED CEILING
9 DELEGATED DESIGN, PRE-MANUFACTURED, PREFINISHED METAL CANOPY (MTL-2), TYP
10 1" HANGAR PIPE ASSEMBLY W/ THREADED ADJUSTED ROD
11 PREFINISHED SLOPED METAL COPING (MTL-1)
12 CONDUCTOR HEAD, TYP
13 FULLY ADHERED TPO MEMBRANE
14 5/8" COVER BOARD
15 MORTAR MESH
16 CONTINUOUS HEMMED THRU WALL FLASHING
17 GROUT CAVITY
18 SCHEDULED PARTITION
19 1/2" JOINT FILLER
20 EXTERIOR GRADE NAILER
21 CONCRETE SLAB, REFER STRUCTURAL
22 COMPACTED GRAVEL SUB-BASE, REFER TO STRUCTURAL
23 GRADE, REFER TO CIVIL
24 CANOPY THRU-WALL FASTENER WITH COMPRESSION SPACER AS REQUIRED BY MFR, REFER TO STRUCTURAL FOR CONCRETE REQUIREMENTS AT FASTENER LOCATIONS
25 CONCRETE SIDEWALK (SLOPE AWAY FROM BUILDING), REFER TO CIVIL
26 2-1/2" X 12" ALUMINUM DECKING
27 EXTRUDED ALUMINUM FASCIA
28 INTERMEDIATE ALUMINUM TROUGH
29 CARRIAGE BOLT ASSEMBLY
30 ALUMINUM REAR CLIP ANGLE, W/ COUNTER FLASHING AND SEALANT
31 CANOPY GUTTER BY MFR
32 EXTRUDED ALUMINUM FASCIA (BEYOND)
33 VAPOR RETARDER
34 TPO MEMBRANE ADHERED TO WALL. EXTEND UP AND OVER COPING BLOCKING AND TERMINATE ON FACE OF COPING BLOCKING
35 AIR BARRIER TRANSITION MEMBRANE OVER 2" CONT FOAM
36 PROTECTION BOARD

SYM	DESCRIPTION	DATE	APPR

NAVFAC

COMMONWEALTH OF VIRGINIA
PETER SOUKAS
Lic. No. 401017157
6/13/2025
ARCHITECT
SEAL

Jacobs
1100 NORTH GLEBE ROAD
SUITE 500
ARLINGTON, VIRGINIA 22201
571.218.1000
FAX: 571.218.1600

A/E INFO

APPROVED
FOR COMMANDER NAVFAC 8/14/2025

ACTIVITY
APPROVED BY LCDR ELIZABETH OLOKODE NAVFAC NLON FEAD DIRECTOR NEW LONDON, GROTON, CT

SATISFACTORY TO DATE	05/27/2025
DES PS / DRW PS / CHK WS	
PM/DM	SMS/ CWJ
BRANCH MANAGER	DJD
CHIEF ENG/ARCH	JWJ
FIRE PROTECTION	HPN

DEPARTMENT OF THE NAVY
NAVAL FACILITIES ENGINEERING SYSTEMS COMMAND - MID-ATLANTIC
MID-ATLANTIC
NAVAL FACILITIES ENGINEERING SYSTEMS COMMAND
NAVAL STATION - NORFOLK, VA
NAVAL SUBMARINE BASE NEW LONDON
GROTON, CONNECTICUT
P-1102 WEAPONS MAGAZINE & ORDNANCE OPERATIONS FACILITY
OPERATIONS
ARCHITECTURAL EXTERIOR DETAILS

SCALE: AS NOTED
EPROJECT NO.: 1667770
CONSTR. CONTR. NO.
NAVFAC DRAWING NO. 12893982
SHEET 32 OF 140
A-501

6/20/2025 10:33:03 AM A-501
\\cdc1vs01\fedgis\PD2E1028\ARCH\BELOG-1667770-A-BIM.rvt

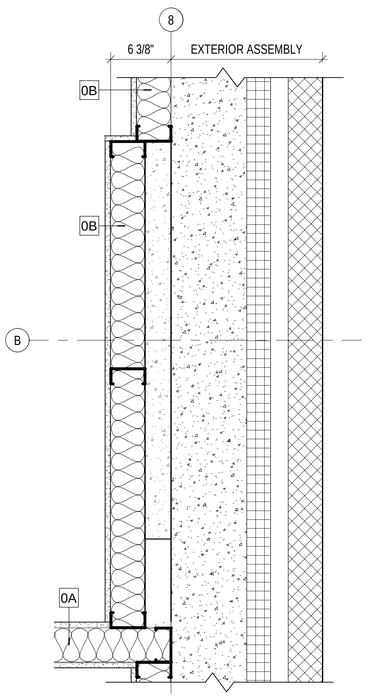

B1 PILASTER DETAIL
1 1/2" = 1'-0" (A-101)

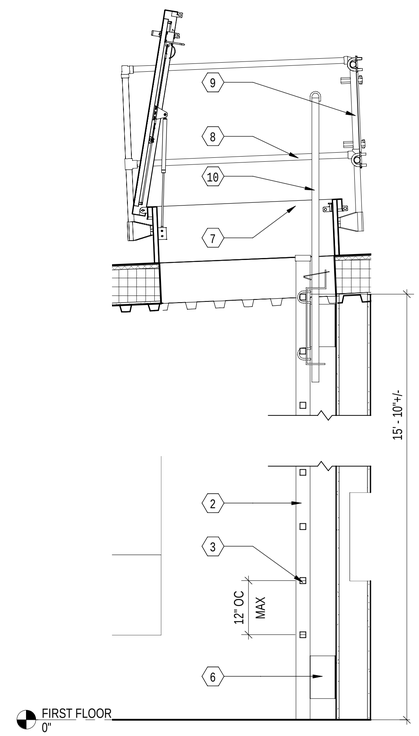

B2 FIXED LADDER SECTION
3/4" = 1'-0" (A-102)

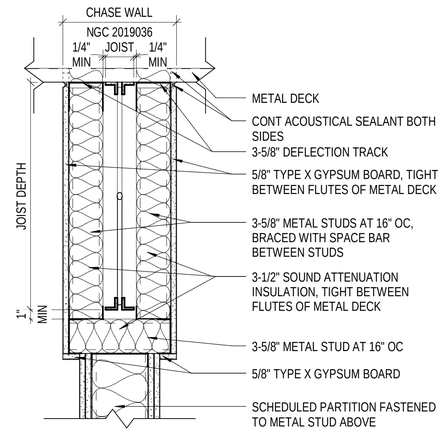

C3 STC RATED PARTITION ALONG JOIST
1 1/2" = 1'-0" (A-101)

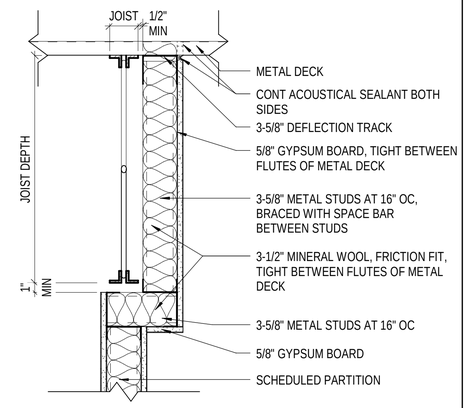

C4 PARTITION ALONG JOIST
1 1/2" = 1'-0" (A-101)

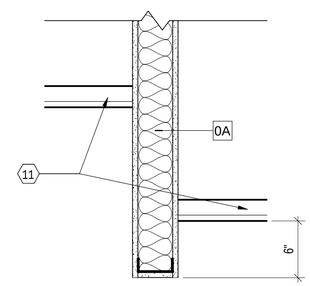

B3 TYPICAL BULKHEAD DETAIL
1 1/2" = 1'-0" (A-102)

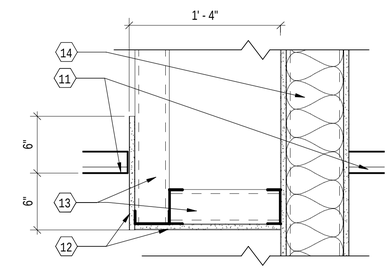

B4 TYPICAL GYP SOFFIT DETAIL
1 1/2" = 1'-0" (A-101)

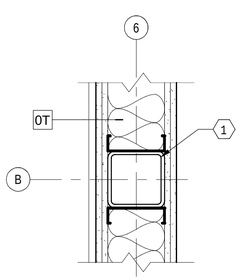

A1 COLUMN/ STUD PLAN DETAIL
1 1/2" = 1'-0" (A-101)

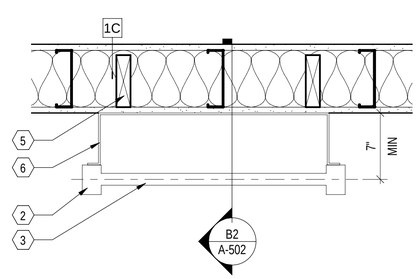

A2 ROOF ACCESS LADDER DETAIL
1 1/2" = 1'-0" (A-101)

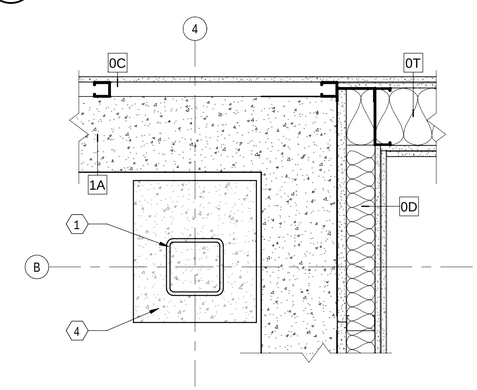

A3 ENCASED COLUMN DETAIL
1 1/2" = 1'-0" (A-101)

SHEET KEYNOTES

1 STRUCTURAL STEEL FRAMING, REFER TO STRUCTURAL
2 OSHA COMPLIANT ROOF ACCESS LADDER
3 1 1/4" SQUARE SERRATED RUNGS
4 ENCASED STEEL COLUMN, REFER TO STRUCTURAL
5 WOOD BLOCKING AS REQUIRED
6 WALL BRACKET AS REQUIRED BY MFR
7 OSHA COMPLIANT 30" X 37" SINGLE-LEAF ROOF HATCH
8 OSHA COMPLIANT SAFETY RAILS
9 OSHA COMPLIANT SELF-CLOSING GATE
10 DROP-DOWN SAFETY POST
11 SCHEDULED CEILING
12 5/8" GYPSUM WALLBOARD
13 3 5/8" METAL STUDS @ 16" O.C. AT VERTICAL LEG EXTEND STUD TO DECK ABOVE
14 SCHEDULED PARTITION

0 6" 1' 2'
1 1/2" = 1'-0"

SYM	DESCRIPTION	DATE	APPR

NAVFAC

COMMONWEALTH OF VIRGINIA
PETER SOUKAS
Lic. No. 401017157
6/18/2025
ARCHITECT
SEAL

Jacobs
1100 NORTH GLEBE ROAD
SUITE 500
ARLINGTON, VIRGINIA 22201
571.218.1000
FAX: 571.218.1600

A/E INFO

APPROVED
FOR COMMANDER NAVFAC 8/14/2025

ACTIVITY
APPROVED BY LCDR ELIZABETH OLOKODE NAVFAC N.ON FEAD DIRECTOR NEW LONDON, GROTON, CT

SATISFACTORY TO DATE	05/27/2025
DES PS DRW PS CHK WS	
PM/DM	SMS/ CWJ
BRANCH MANAGER	DJD
CHIEF ENG/ARCH	JWJ
FIRE PROTECTION	HPN

DEPARTMENT OF THE NAVY
NAVAL FACILITIES ENGINEERING SYSTEMS COMMAND - MID-ATLANTIC
MID-ATLANTIC
NAVAL FACILITIES ENGINEERING SYSTEMS COMMAND
NAVAL STATION - NORFOLK, VA
NAVAL SUBMARINE BASE NEW LONDON
GROTON, CONNECTICUT
P-1102 WEAPONS MAGAZINE & ORDNANCE OPERATIONS FACILITY
OPERATIONS
ARCHITECTURAL MISCELLANEOUS DETAILS

SCALE: AS NOTED
EPROJECT NO.: 1667770
CONSTR. CONTR. NO.
NAVFAC DRAWING NO. 12893983
SHEET 33 OF 140
A-502

6/20/2025 10:33:09 AM A-502
\\ac1vs01\hesp\PROJECTS\28\ARCH\BLDG-1667770-A-BIM.rvt

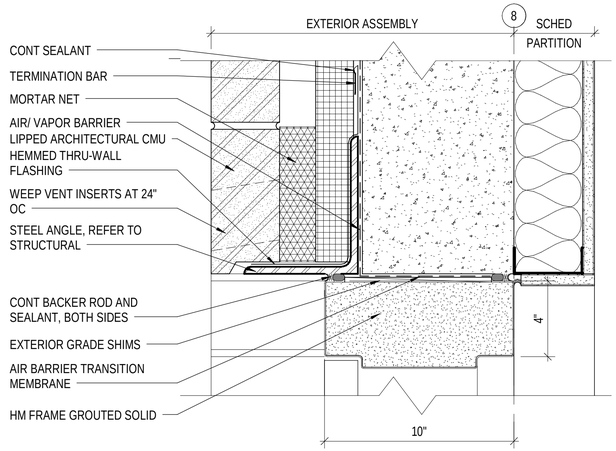

C1 EXT HM DOOR HEAD DETAIL

3" = 1'-0" (A-501)

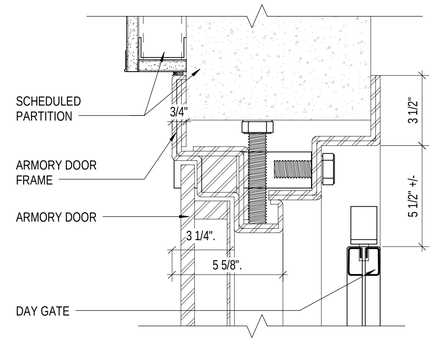

C2 ARMORY DOOR HEAD DETAIL

3" = 1'-0"

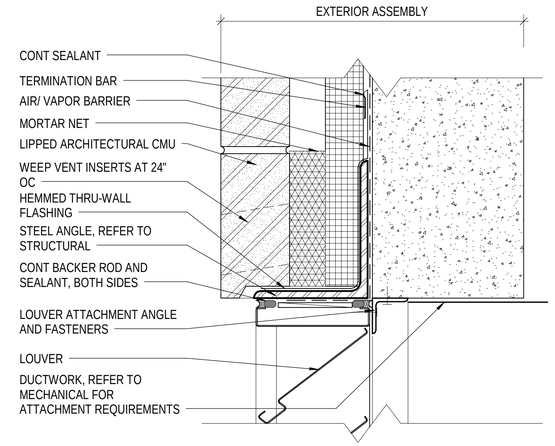

C3 EXT LOUVER HEAD DETAIL

3" = 1'-0"

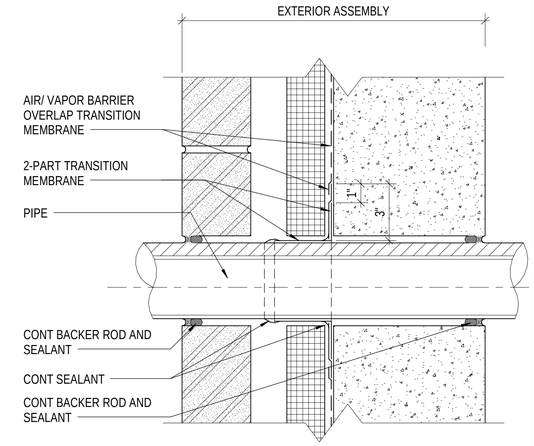

C4 TYPICAL PENETRATION AT AIR BARRIER

3" = 1'-0"

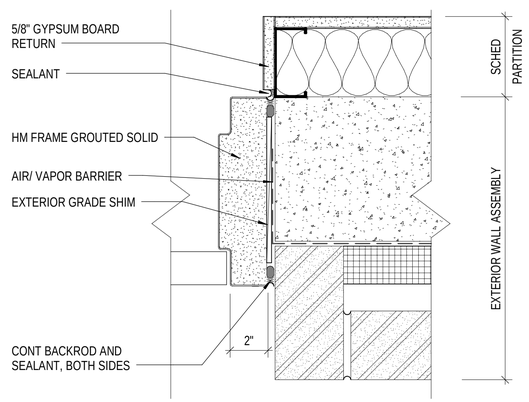

B1 EXT DOOR JAMB DETAIL

3" = 1'-0"

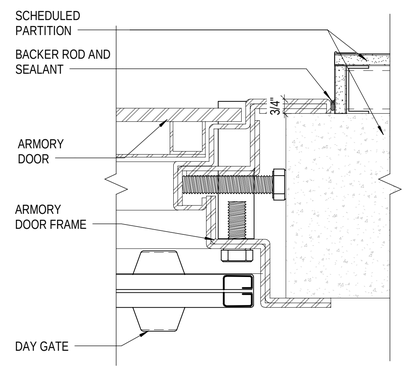

B2 ARMORY DOOR JAMB DETAIL

3" = 1'-0"

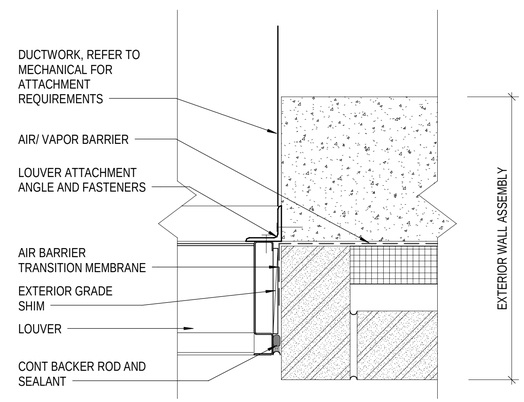

B3 EXT LOUVER JAMB DETAIL

3" = 1'-0"

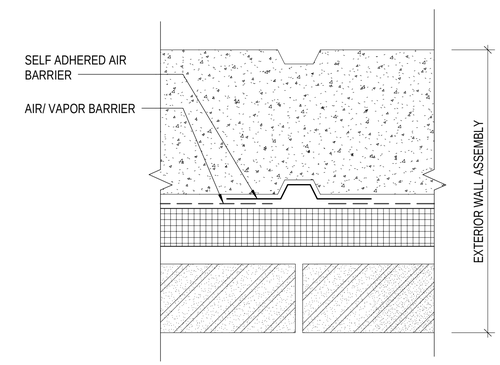

B4 AIR BARRIER AT CONTROL JOINT

3" = 1'-0"

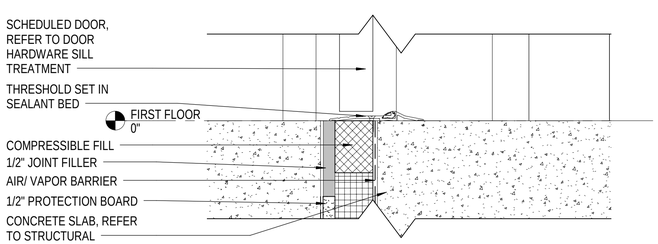

A1 EXT DOOR SILL DETAIL

3" = 1'-0" (A-501)

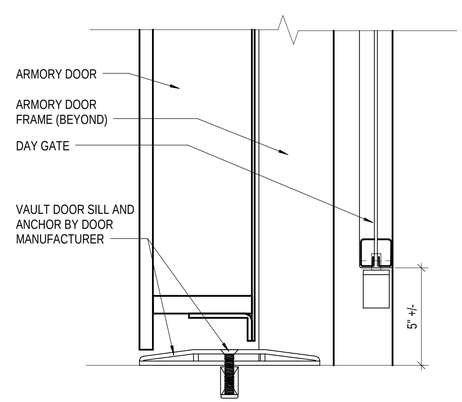

A2 ARMORY DOOR SILL DETAIL

3" = 1'-0"

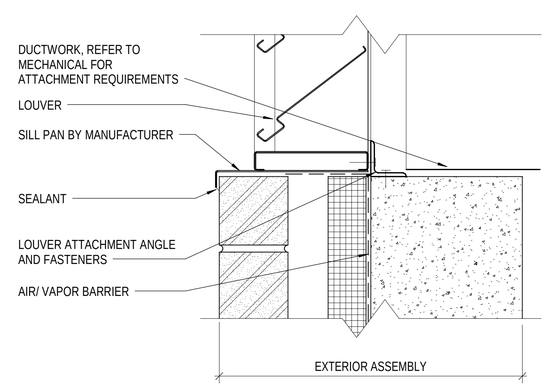

A3 EXT LOUVER SILL DETAIL

3" = 1'-0"

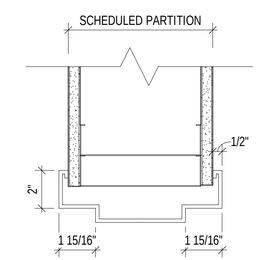

A4 INT. DOOR HEAD/ JAMB DETAIL

3" = 1'-0"

0 3" 6" 1'
3" = 1'-0"

SYM	DESCRIPTION	DATE	APPR

NAVFAC

COMMONWEALTH OF VIRGINIA
PETER SOUKAS
Lic. No. 401017157
6/23/2025
ARCHITECT
SEAL

Jacobs
1100 NORTH GLEBE ROAD
SUITE 500
ARLINGTON, VIRGINIA 22201
571.218.1000
FAX: 571.218.1600

A/E INFO

APPROVED
FOR COMMANDER NAVFAC 8/14/2025
ACTIVITY
APPROVED BY LCDR ELIZABETH OLOKODE NAVFAC NLON FEAD DIRECTOR NEW LONDON, GROTON, CT
SATISFACTORY TO DATE 05/27/2025

DES	PS	DRW PS	CHK WS
PM/DM			SMS/ CWJ
BRANCH MANAGER			DJD
CHIEF ENG/ARCH			JWJ
FIRE PROTECTION			HPN

DEPARTMENT OF THE NAVY
NAVAL FACILITIES ENGINEERING SYSTEMS COMMAND
NAVAL FACILITIES ENGINEERING SYSTEMS COMMAND - MID-ATLANTIC
MID-ATLANTIC
NAVAL STATION - NORFOLK, VA
NAVAL SUBMARINE BASE NEW LONDON
GROTON, CONNECTICUT
P-1102 WEAPONS MAGAZINE & ORDNANCE OPERATIONS FACILITY
OPERATIONS
OPENING DETAILS

SCALE: AS NOTED
EPROJECT NO.: 1667770
CONSTR. CONTR. NO.
NAVFAC DRAWING NO. 12893984
SHEET 34 OF 140
A-503

6/20/2025 10:33:11 AM A-503
\\ad.xecdi\depot\PE32E028\ARC\HELDG-1667770-A-BIM.rvt

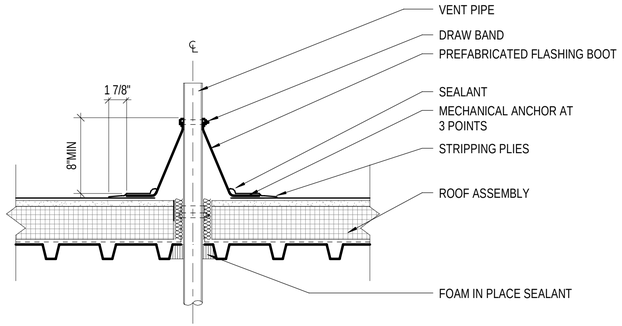

C1 TYPICAL PIPE PENETRATION

1 1/2" = 1'-0" (A-103)

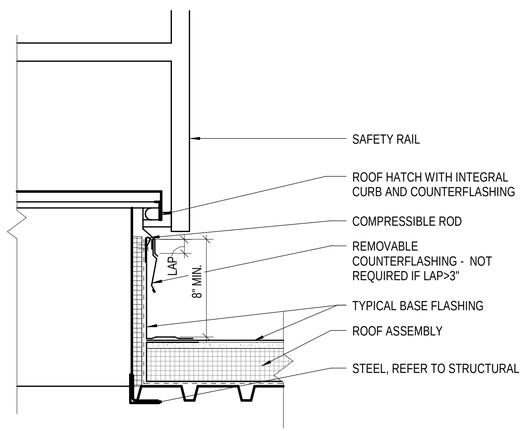

B1 ROOF HATCH DETAIL

1 1/2" = 1'-0" (A-103)

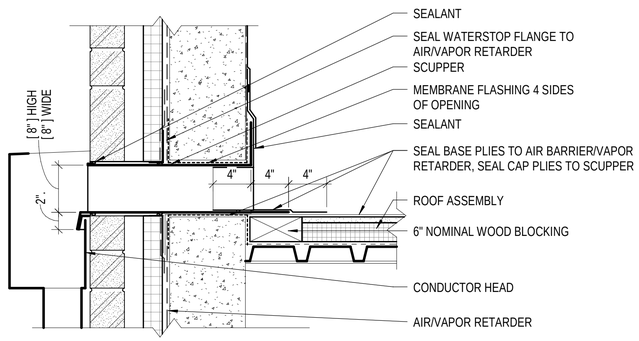

A1 TYPICAL SCUPPER/ CONDUCTOR HEAD DETAIL

1 1/2" = 1'-0" (A-103)

GENERAL SHEET NOTES

A. TYPICAL DETAILS DO NOT GRAPHICALLY PORTRAY ROOF AND WALL ASSEMBLIES. REFER TO WALL SECTIONS FOR ASSEMBLIES.

0 6" 1' 2'
1 1/2" = 1'-0"

SYM	DESCRIPTION	DATE	APPR

NAVFAC

COMMONWEALTH OF VIRGINIA
PETER SOUKAS
Lic. No. 401017157
6/23/2025
ARCHITECT
SEAL

Jacobs
1100 NORTH GLEBE ROAD
SUITE 500
ARLINGTON, VIRGINIA 22201
571.218.1000
FAX: 571.218.1600
A/E INFO

APPROVED
FOR COMMANDER NAVFAC 8/14/2025

ACTIVITY:
APPROVED BY LCDR ELIZABETH OLOKODE NAVFAC NLON FEAD DIRECTOR NEW LONDON, GROTON, CT

SATISFACTORY TO DATE 05/27/2025

DES PS	DRW PS	CHK WS	
PM/DM	SMS/ CWJ		
BRANCH MANAGER	DJD		
CHIEF ENG/ARCH	JWJ		
FIRE PROTECTION	HPN		

DEPARTMENT OF THE NAVY
NAVAL FACILITIES ENGINEERING SYSTEMS COMMAND
MID-ATLANTIC
NAVAL FACILITIES ENGINEERING SYSTEMS COMMAND - MID-ATLANTIC
NAVAL STATION - NORFOLK, VA
NAVAL SUBMARINE BASE NEW LONDON
GROTON, CONNECTICUT
P-1102 WEAPONS MAGAZINE & ORDNANCE OPERATIONS FACILITY
OPERATIONS
TYPICAL ROOF DETAILS

SCALE: AS NOTED
EPROJECT NO.: 1667770
CONSTR. CONTR. NO.
NAVFAC DRAWING NO. 12893985
SHEET 35 OF 140

A-510

6/20/2025 10:33:13 AM A-510
\\dc1vs01\Redp\PDZE\6282\ARCH\BLDG-1667770-A-BIM.rvt

DOOR SCHEDULE

DOOR NO.	DOOR TYPE	DOOR SIZE WIDTH	DOOR SIZE HEIGHT	DOOR SIZE THICKNESS	DOOR MATERIAL	FRAME TYPE	FRAME MATERIAL	FRAME DETAILS HEAD	FRAME DETAILS JAMB	FRAME DETAILS SILL	FIRE RATING	HARDWARE SET NO.	REMARKS
FIRST FLOOR													
101A	B	6'-0"	7'-0"	1 3/4"	HM	F2	HM	C1/A-503	B1/A-503	A1/A-503	NR	3	
101B	B	6'-0"	7'-0"	1 3/4"	HM	F1	HM	A4/A-503	A4/A-503	--	NR	19	
103	B	6'-0"	7'-0"	1 3/4"	HM	F2	HM	C1/A-503	B1/A-503	A1/A-503	NR	5	
104	B	8'-0"	7'-0"	1 3/4"	HM	F2	HM	C1/A-503	B1/A-503	A1/A-503	NR	6	
105	A	3'-0"	7'-0"	1 3/4"	HM	F1	HM	A4/A-503	A4/A-503	--	45 MIN	11	
107	A	3'-0"	7'-0"	1 3/4"	HM	F1	HM	A4/A-503	A4/A-503	--	NR	10	STC-45, SECURE ROOM
109	A	3'-0"	7'-0"	1 3/4"	HM	F1	HM	A4/A-503	A4/A-503	--	NR	10	STC-45, SECURE ROOM
111	-	3'-0"	7'-0"	9"	STEEL	-	STEEL	C2/A-503	B2/A-503	A2/A-503	45 MIN	22	VAULT DOOR W/ DAY GATE
112A	B	6'-0"	7'-0"	1 3/4"	HM	F1	HM	A4/A-503	A4/A-503	--	NR	12	
112B	B	6'-0"	7'-0"	1 3/4"	HM	F1	HM	A4/A-503	A4/A-503	--	NR	12	
113A	A	3'-0"	7'-0"	1 3/4"	HM	F2	HM	C1/A-503	B1/A-503	A1/A-503	NR	7	
113B	A	3'-0"	7'-0"	1 3/4"	HM	F1	HM	A4/A-503	A4/A-503	--	45 MIN	15	
114	A	3'-0"	7'-0"	1 3/4"	HM	F1	HM	A4/A-503	A4/A-503	--	NR	20	
115A	A	3'-0"	7'-0"	1 3/4"	HM	F2	HM	C1/A-503	B1/A-503	A1/A-503	NR	7	
115B	A	3'-0"	7'-0"	1 3/4"	HM	F1	HM	A4/A-503	A4/A-503	--	45 MIN	15	
116	A	3'-0"	7'-0"	1 3/4"	HM	F1	HM	A4/A-503	A4/A-503	--	NR	20	
117	A	3'-0"	7'-0"	1 3/4"	HM	F1	HM	A4/A-503	A4/A-503	--	NR	13	
118	A	3'-0"	7'-0"	1 3/4"	HM	F1	HM	A4/A-503	A4/A-503	--	NR	18	
119	A	3'-0"	7'-0"	1 3/4"	HM	F1	HM	A4/A-503	A4/A-503	--	NR	16	
122A	A	3'-0"	7'-0"	1 3/4"	HM	F2	HM	C1/A-503	B1/A-503	A1/A-503	NR	7	
122B	A	3'-0"	7'-0"	1 3/4"	HM	F1	HM	A4/A-503	A4/A-503		45 MIN	15	
123	A	3'-0"	7'-0"	1 3/4"	HM	F1	HM	A4/A-503	A4/A-503	--	NR	20	
124	B	5'-8"	7'-0"	1 3/4"	HM	F1	HM	A4/A-503	A4/A-503		NR	12	
125A	A	3'-0"	7'-0"	1 3/4"	HM	F2	HM	C1/A-503	B1/A-503	A1/A-503	NR	7	
125B	A	3'-0"	7'-0"	1 3/4"	HM	F1	HM	A4/A-503	A4/A-503		45 MIN	15	
126A	A	3'-0"	7'-0"	1 3/4"	HM	F2	HM	C1/A-503	B1/A-503	A1/A-503	NR	4	
127	A	3'-0"	7'-0"	1 3/4"	HM	F1	HM	A4/A-503	A4/A-503	--	NR	14	STC-25
128	A	3'-0"	7'-0"	1 3/4"	HM	F1	HM	A4/A-503	A4/A-503	--	NR	14	STC-25
129	A	3'-0"	7'-0"	1 3/4"	HM	F1	HM	A4/A-503	A4/A-503	--	NR	14	STC-25
130	A	3'-0"	7'-0"	1 3/4"	HM	F1	HM	A4/A-503	A4/A-503	--	NR	14	STC-25
131A	A	3'-0"	7'-0"	1 3/4"	HM	F2	HM	C1/A-503	B1/A-503	A1/A-503	NR	4	
131B	B	6'-0"	7'-0"	1 3/4"	HM	F1	HM	A4/A-503	A4/A-503	--	NR	9	STC-30
134	A	3'-0"	7'-0"	1 3/4"	HM	F1	HM	A4/A-503	A4/A-503	--	NR	20	

LOUVER SCHEDULE

TYPE	SIZE WIDTH	SIZE HEIGHT	LOUVER DETAILS HEAD	LOUVER DETAILS JAMB	LOUVER DETAILS SILL	REMARKS
L1	3'-0"	3'-0"	C3/A-503	B3/A-503	A3/A-503	WIND DRIVEN RAIN LOUVER WITH BIRD SCREEN, COORDINATE LOUVER LOCATION WITH MECHANICAL, BOTTOM OF LOUVER MUST BE 10'-0" ABOVE GRADE, MIN.
L2	1'-10"	1'-10"	C3/A-503	B3/A-503	A3/A-503	WIND DRIVEN RAIN LOUVER WITH BIRD SCREEN, COORDINATE LOUVER LOCATION WITH MECHANICAL, BOTTOM OF LOUVER MUST BE 10'-0" ABOVE GRADE, MIN.

CANOPY SCHEDULE

TYPE	SIZE WIDTH	SIZE PROJECTION	NOTES
C1	5'-0"	5'-0"	INTEGRAL GUTTER. AND DOWNSPOUT AS REQUIRED BY MFR., FINISH TO MATCH CANOPY. LOCATE DOWNSPOUT ON DOOR HINGE SIDE. PROVIDE CONCRETE SPLASHBLOCK
C2	10'-0"	5'-0"	INTEGRAL GUTTER. AND DOWNSPOUT AS REQUIRED BY MFR., FINISH TO MATCH CANOPY. LOCATE DOWNSPOUT ON DOOR HINGE SIDE. PROVIDE CONCRETE SPLASHBLOCK

GENERAL SHEET NOTES

A. REFER TO SPECIFICATION 08 71 00 FOR DOOR HARDWARE SETS.

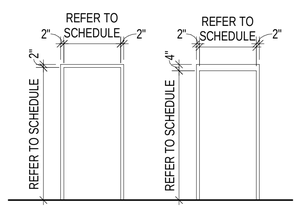

TYPE: F1 F2

DOOR FRAME TYPES
1/4" = 1'-0"

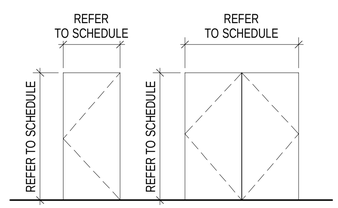

TYPE: A B

DOOR TYPES
1/4" = 1'-0"

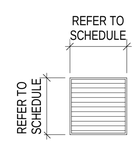

TYPE: L(#)

LOUVER TYPES
1/4" = 1'-0"

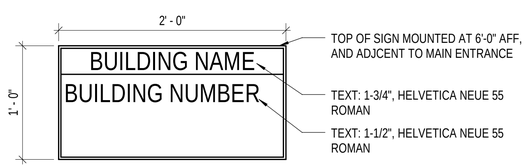

A1 BUILDING SIGNAGE
1 1/2" = 1'-0"

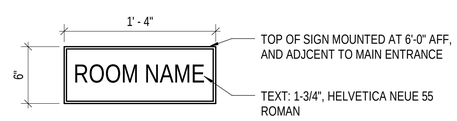

A2 ROOM SIGNAGE
1 1/2" = 1'-0"

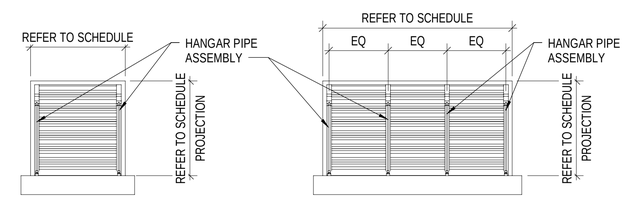

TYPE: C1 C2

CANOPY TYPES
1/4" = 1'-0"

0 6" 1' 2'
1 1/2" = 1'-0"

0 2' 4' 8' 12'
1/4" = 1'-0"

SYM	DESCRIPTION	DATE	APPR

NAVFAC

COMMONWEALTH OF VIRGINIA
PETER SOUKAS
Lic. No. 401017157
6/23/2025
ARCHITECT
SEAL

Jacobs
1100 NORTH GLEBE ROAD
SUITE 500
ARLINGTON, VIRGINIA 22201
571.218.1000
FAX: 571.218.1600
A/E INFO

APPROVED
FOR COMMANDER NAVFAC 8/14/2025
ACTIVITY
APPROVED BY LCDR ELIZABETH OLOKODE NAVFAC NLON FEAD DIRECTOR NEW LONDON, GROTON, CT
SATISFACTORY TO DATE 05/27/2025

DES	PS	DRW	PS	CHK	WS

PM/DM SMS/ CWJ
BRANCH MANAGER DJD
CHIEF ENG/ARCH JWJ
FIRE PROTECTION HPN

DEPARTMENT OF THE NAVY
NAVAL FACILITIES ENGINEERING SYSTEMS COMMAND
MID-ATLANTIC
NAVAL FACILITIES ENGINEERING SYSTEMS COMMAND - MID-ATLANTIC
NAVAL STATION , NORFOLK, VA
NAVAL SUBMARINE BASE NEW LONDON
GROTON, CONNECTICUT
P-1102 WEAPONS MAGAZINE & ORDNANCE OPERATIONS FACILITY
OPERATIONS
ARCHITECTURAL SCHEDULES

SCALE: AS NOTED
EPROJECT NO.: 1667770
CONSTR. CONTR. NO.
NAVFAC DRAWING NO. 12893986
SHEET 36 OF 140
A-601

6/20/2025 10:33:16 AM A-601
\\bk1vs01\Hdsp\PDZE1\0284\ARCH\BLDG-1667770-A-BIM.rvt

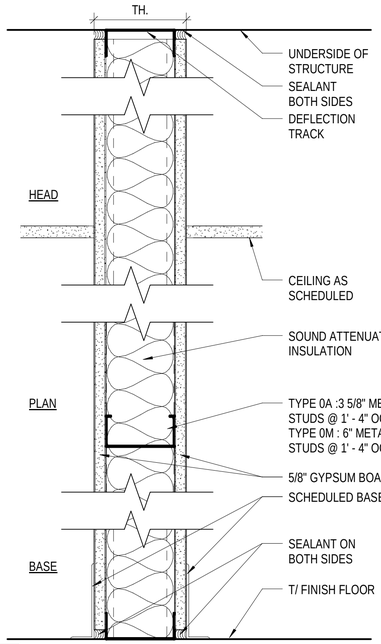

0A	GWB PARTITION		TH. 4 7/8"
FIRE RATING: NON-RATED		DESIGN: N/A	
STC RATING: N/A		TEST NO.: N/A	

0M	GWB PARTITION		TH. 7 1/4"
FIRE RATING: NON-RATED		DESIGN: N/A	
STC RATING: N/A		TEST NO.: N/A	

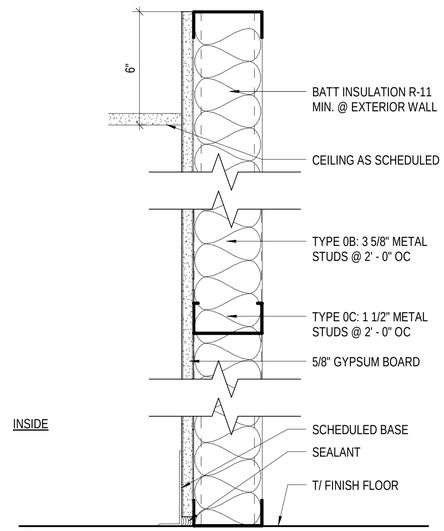

0B	NON-RATED FURRING		TH. 4 1/4"
FIRE RATING: 0		DESIGN: N/A	
STC RATING: N/A		TEST NO.: N/A	

0C	NON-RATED FURRING		TH. 2 1/8"
FIRE RATING: 0		DESIGN: N/A	
STC RATING: N/A		TEST NO.: N/A	

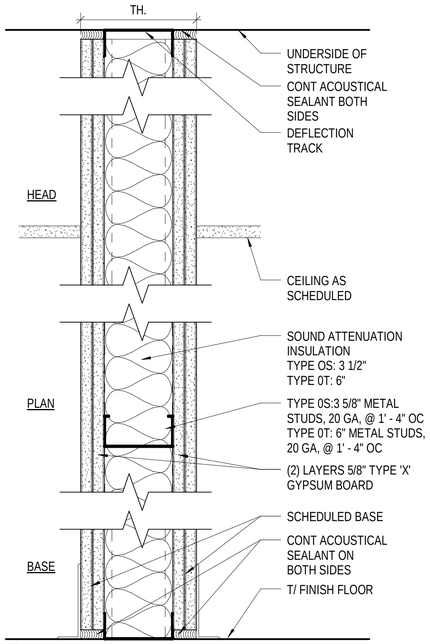

0S	GWB PARTITION		TH. 6 1/8"
FIRE RATING: NON-RATED		DESIGN: N/A	
STC RATING: 50		TEST NO.: NGC 2018113	

0T	GWB PARTITION		TH. 8 1/2"
FIRE RATING: NON-RATED		DESIGN: N/A	
STC RATING: 50		TEST NO.: NGC 2018132	

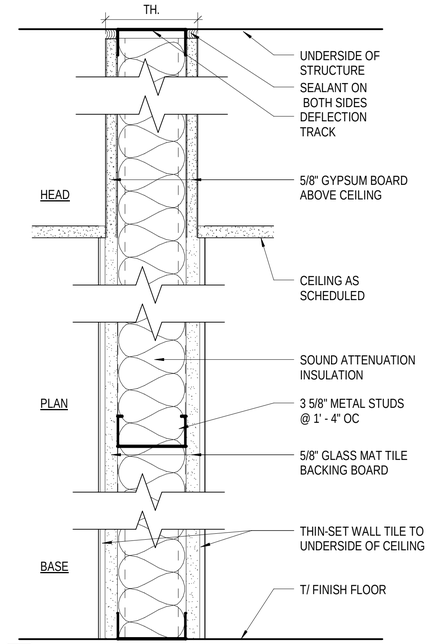

0E	TILE PARTITION		TH. 4 7/8"
FIRE RATING: NON-RATED		DESIGN: N/A	
STC RATING: N/A		TEST NO.: N/A	

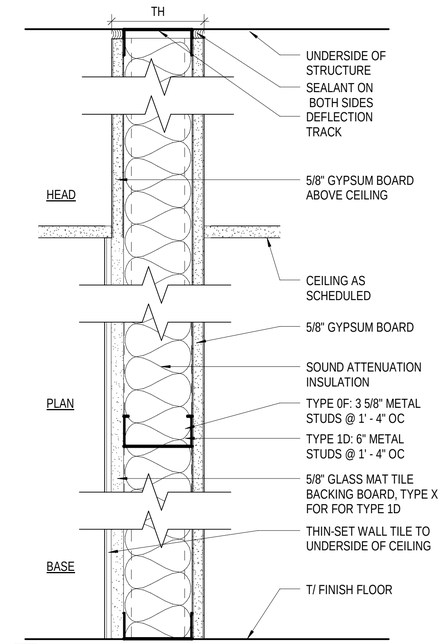

0F	GWB / TILE PARTITION		TH. 4 7/8"
FIRE RATING: NON-RATED		DESIGN: N/A	
STC RATING: N/A		TEST NO.: N/A	

1D	GWB / TILE FIRE BARRIER		TH. 7 1/4"
FIRE RATING: 60 MIN		DESIGN: U419	
STC RATING: N/A		TEST NO.: N/A	

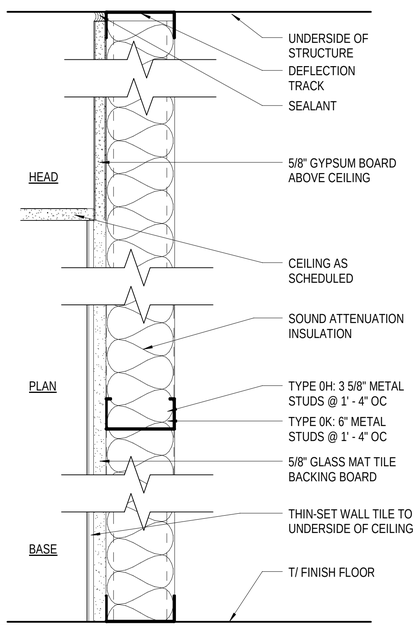

0H	TILE FURRING		TH. 5 1/4"
FIRE RATING: NON-RATED		DESIGN: N/A	
STC RATING: N/A		TEST NO.: N/A	

0K	TILE FURRING		TH. 7 5/8"
FIRE RATING: NON-RATED		DESIGN: N/A	
STC RATING: N/A		TEST NO.: N/A	

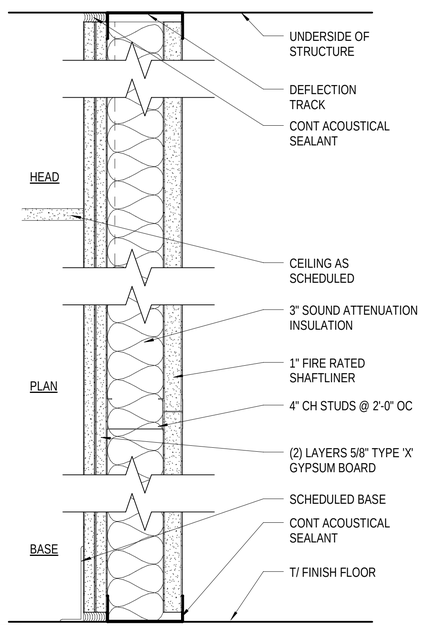

0D	SHAFTWALL PARTITION		TH. 5 1/4"
FIRE RATING: NON-RATED		DESIGN: N/A	
STC RATING: 45 MIN		TEST NO.: NGC 2015044	

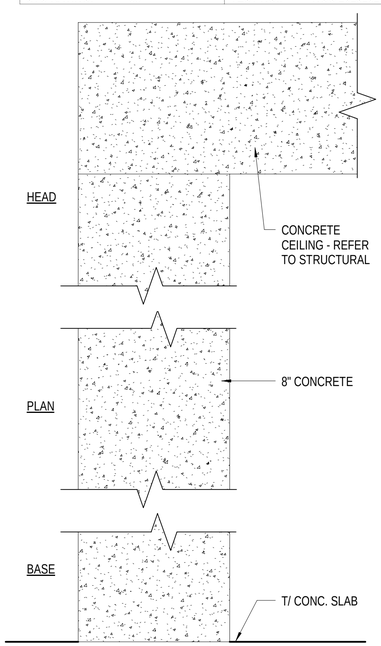

1A	CONCRETE FIRE BARRIER		TH. 8"
FIRE RATING: 60 MIN		DESIGN: N/A	
STC RATING: N/A		TEST NO.:	

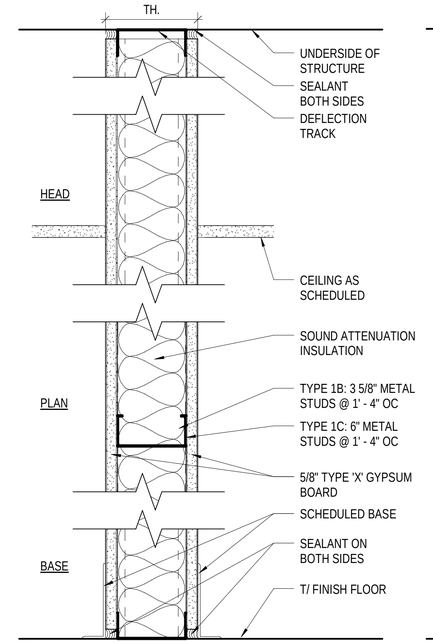

1B	GWB FIRE BARRIER		TH. 4 7/8"
FIRE RATING: 60 MIN		DESIGN: U465	
STC RATING: N/A		TEST NO.: N/A	

1C	GWB FIRE BARRIER		TH. 7 1/4"
FIRE RATING: 60 MIN		DESIGN: U465	
STC RATING: N/A		TEST NO.: N/A	

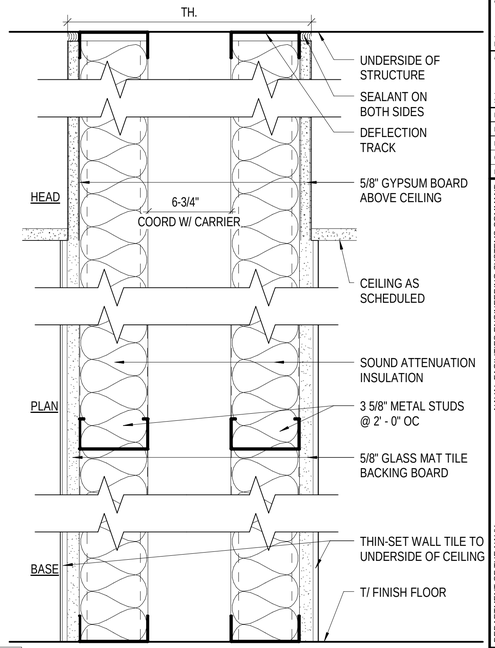

0J	TILE CHASE PARTITION		TH. 1'- 4"
FIRE RATING: NON-RATED		DESIGN: N/A	
STC RATING: N/A		TEST NO.: N/A	

SYM	DESCRIPTION	DATE	APPR

NAVFAC

COMMONWEALTH OF VIRGINIA
PETER SOUKAS
Lic. No. 401017157
6/18/2025
ARCHITECT
SEAL

Jacobs
1100 NORTH GLEBE ROAD
SUITE 500
ARLINGTON, VIRGINIA 22201
571.218.1000
FAX: 571.218.1600

A/E INFO

APPROVED
FOR COMMANDER NAVFAC 8/14/2025

ACTIVITY
APPROVED BY LCDR ELIZABETH OLOKODE NAVFAC NLON FEAD DIRECTOR NEW LONDON, GROTON, CT

SATISFACTORY TO DATE 05/27/2025

DES	PS	DRW	PS	CHK	WS
PM/DM	SMS/ CWJ				
BRANCH MANAGER	DJD				
CHIEF ENG/ARCH	JWJ				
FIRE PROTECTION	HPN				

DEPARTMENT OF THE NAVY
NAVAL FACILITIES ENGINEERING SYSTEMS COMMAND - MID-ATLANTIC
MID-ATLANTIC
NAVAL FACILITIES ENGINEERING SYSTEMS COMMAND
NAVAL STATION - NORFOLK, VA
NAVAL SUBMARINE BASE NEW LONDON
GROTON, CONNECTICUT
P-1102 WEAPONS MAGAZINE & ORDNANCE OPERATIONS FACILITY
OPERATIONS
ARCHITECTURAL PARTITION TYPES

SCALE: AS NOTED
EPROJECT NO.: 1667770
CONSTR. CONTR. NO.
NAVFAC DRAWING NO. 12893987
SHEET 37 OF 140
A-602

6/20/2025 10:03:19 AM
\\uc1.vsc01\esp\PF2E1628\ARCH\BLDG-1667770-A-BIM.rvt
A-602

EXTERIOR MATERIAL SCHEDULE

TYPE	ITEM	MATERIAL	FINISH/COLOR (B.O.D.)	COMMENTS
AB-1	ARCHITECTURAL BLOCK	CONCRETE BLOCK	GROUND FACE / ALABASTER	40% OF TOTAL ARCHITECTURAL BLOCK
AB-2	ARCHITECTURAL BLOCK	CONCRETE BLOCK	GROUND FACE / BUFF	28% OF TOTAL ARCHITECTURAL BLOCK
AB-3	ARCHITECTURAL BLOCK	CONCRETE BLOCK	GROUND FACE / LIMESTONE	15% OF TOTAL ARCHITECTURAL BLOCK
AB-4	ARCHITECTURAL BLOCK	CONCRETE BLOCK	ROCK FACE / BUFF	6% OF TOTAL ARCHITECTURAL BLOCK
AB-5	ARCHITECTURAL BLOCK	CONCRETE BLOCK	ROCK FACE / ALABASTER	6% OF TOTAL ARCHITECTURAL BLOCK
AB-6	ARCHITECTURAL BLOCK	CONCRETE BLOCK	ROCK FACE / LIMESTONE	4% OF TOTAL ARCHITECTURAL BLOCK
MTL-1	METAL COPING	GALVANIZED STEEL	GREY	
MTL-2	METAL CANOPY AND LOUVERS	ALUMINUM	GREY	
MTL-3	DOWNSPOUT AND CONDUCTOR HEADS	GALVANIZED STEEL	GREY	
PT-1	EXTERIOR HM DOORS & FRAMES	HIGH PERFORMANCE COATING SYSTEM	GREY	APPLIED TO HM DOORS & FRAMES AT THE EXTERIOR
SEALANT	CONTROL JOINT SEALANT OR PRE-FORMED SEALANT		COLOR TO MATCH ADJACENT ARCHITECTURAL BLOCK	TYPICAL CONTROL JOINT OR EXPOSED JOINT

EXTERIOR MATERIAL PATTERN LEGEND

#	PATTERN
AB-1	
AB-2	
AB-3	
AB-4	
AB-5	
AB-6	

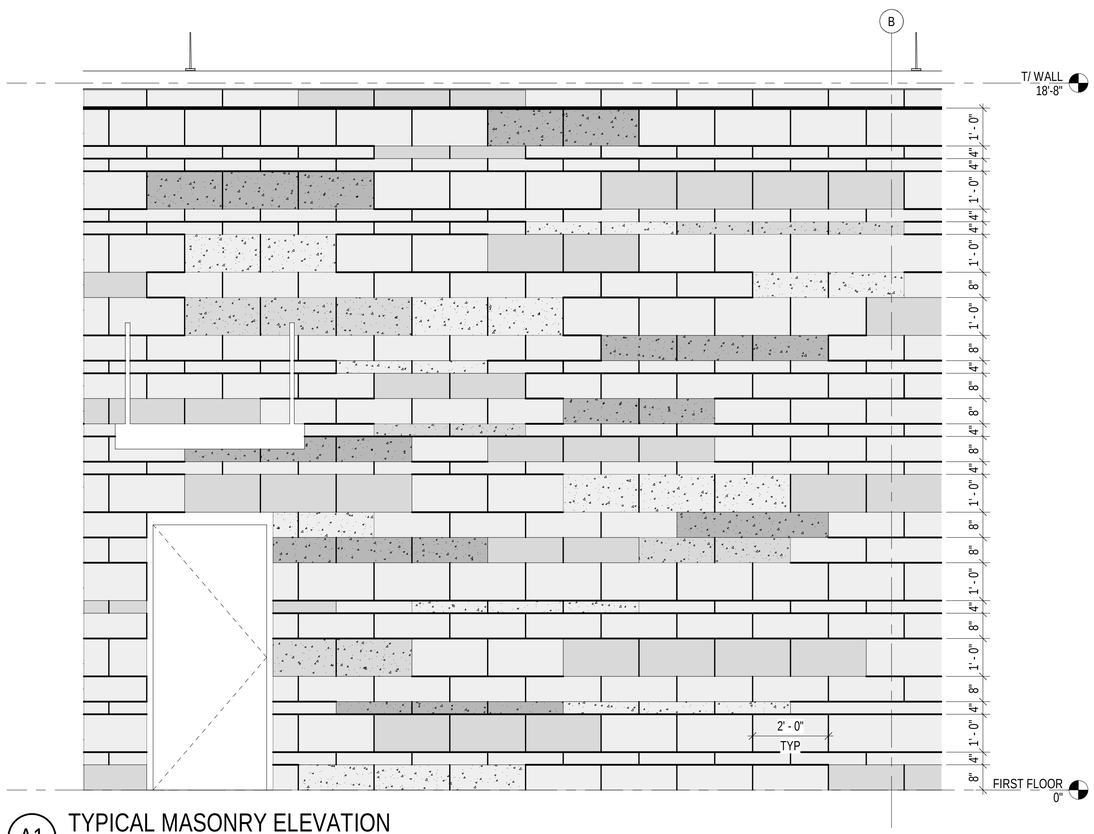

A1 TYPICAL MASONRY ELEVATION

1/2" = 1'-0" (A-201)

A3 PERSPECTIVE RENDERING

NTS

0 1' 2' 4' 6'

1/2" = 1'-0"

SYM	DESCRIPTION	DATE	APPR

NAVFAC

COMMONWEALTH OF VIRGINIA
PETER SOUKAS
Lic. No. 401017157
6/23/2025
ARCHITECT
SEAL

Jacobs
1100 NORTH GLEBE ROAD
SUITE 500
ARLINGTON, VIRGINIA 22201
571.218.1000
FAX: 571.218.1600

A/E INFO

APPROVED
FOR COMMANDER NAVFAC 8/14/2025

ACTIVITY
APPROVED BY LCDR ELIZABETH OLOKODE NAVFAC NLON FEAD DIRECTOR NEW LONDON, GROTON, CT

SATISFACTORY TO DATE 05/27/2025

DES	PS	DRW PS	CHK WS
PM/DM	SMS/ CWJ		
BRANCH MANAGER	DJD		
CHIEF ENG/ARCH	JWJ		
FIRE PROTECTION	HPN		

DEPARTMENT OF THE NAVY
NAVAL FACILITIES ENGINEERING SYSTEMS COMMAND - MID-ATLANTIC
MID-ATLANTIC
NAVAL FACILITIES ENGINEERING SYSTEMS COMMAND
NAVAL STATION - NORFOLK, VA
NAVAL SUBMARINE BASE NEW LONDON
GROTON, CONNECTICUT
P-1102 WEAPONS MAGAZINE & ORDNANCE OPERATIONS FACILITY
OPERATIONS
ARCHITECTURAL EXTERIOR MATERIAL SCHEDULE

SCALE: AS NOTED
EPROJECT NO.: 1667770
CONSTR. CONTR. NO.
NAVFAC DRAWING NO. 12893988
SHEET 38 OF 140

A-603

A-603
6/20/2025 10:33:25 AM
\\uc1v-st18edp\PIDZE1628\ARCHBLDG-1667770-A-BIM.rvt

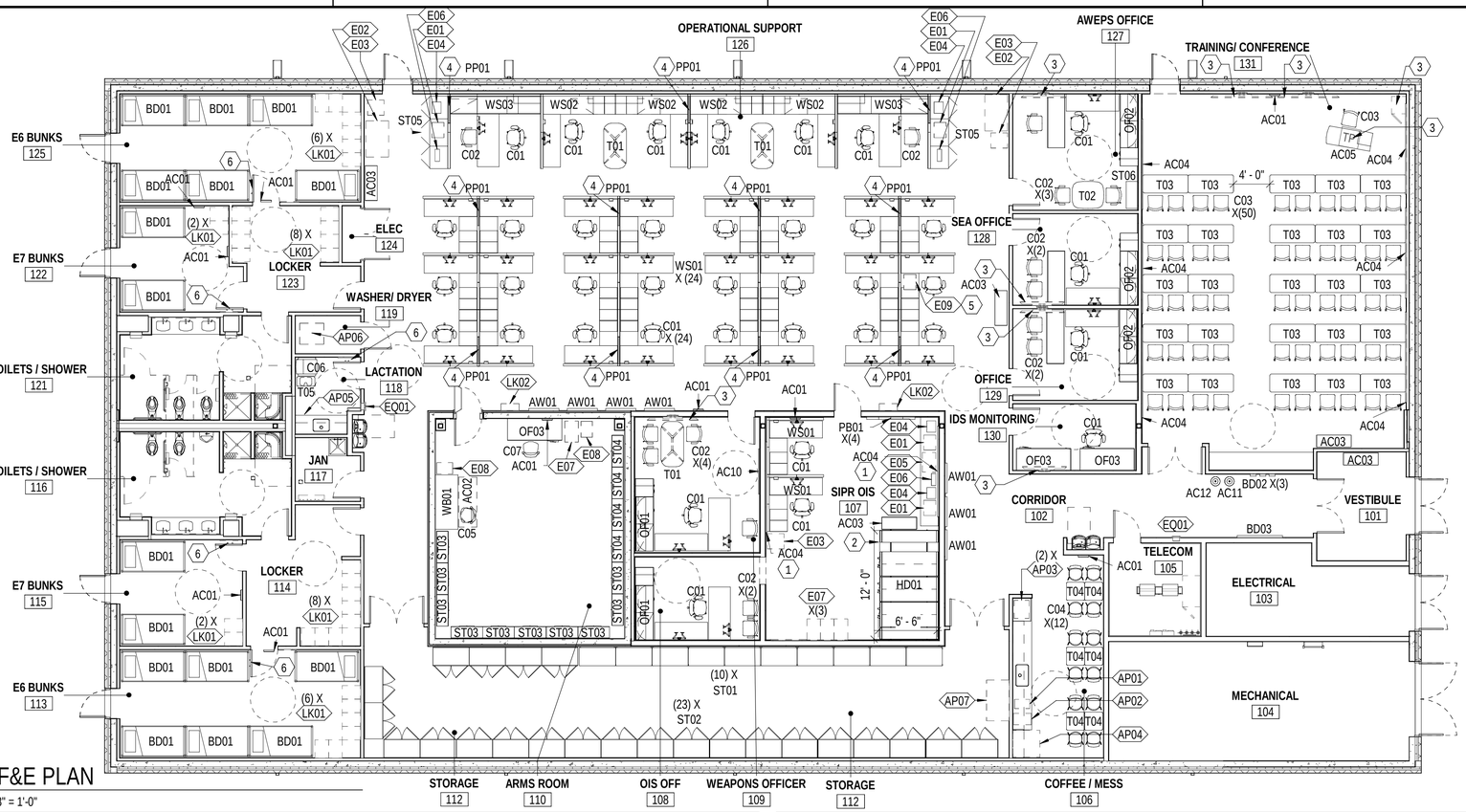

B1 FF&E PLAN
1/8" = 1'-0"

FF&E SCHEDULE

CODE	COUNT	DESCRIPTION	PROVIDED/INSTALLED	COMMENTS
CONTRACTOR FURNISHED / CONTRACTOR INSTALLED (CFCI)				
HD01	1	HIGH DENSITY MOBILE SHELVING STORAGE, 12'-0" X 6'-6" X 84", MECHANICALLY OPERATED	CFCI	INCLUDED IN CONSTRUCTION CONTRACT. BASIS OF DESIGN: SPACE SAVER, STANDARD HIGH DENSITY MOBILE STORAGE
LK01	32	Z LOCKER, HDPE, TWO TIER, 18" x 24" x 72"	CFCI	INCLUDED IN CONSTRUCTION CONTRACT. BASIS OF DESIGN: BRADLEY LENNOX Z LOCKER
LK02	2	CELL PHONE LOCKER, 15 UNIT, 24" X 9.25" X 61"	CFCI	INCLUDED IN CONSTRUCTION CONTRACT. BASIS OF DESIGN: SALSBURY CELLPHONE LOCKER & FREESTANDING ENCLOSURE
FURNITURE FIXTURES & EQUIPMENT (FF&E) & COLLATERAL EQUIPMENT (CEQ) PACKAGE				
AC01	10	WALL CLOCK	FF&E CEQ PACKAGE	
AC02	1	ANTI-FATIGUE FLOOR MAT	FF&E CEQ PACKAGE	
AC03	5	WASTE & RECYCLING STATION	FF&E CEQ PACKAGE	
AC04	8	MARKERBOARD	FF&E CEQ PACKAGE	
AC05	1	INSTRUCTOR'S DESK	FF&E CEQ PACKAGE	
AC10	1	DIGITAL TIME ZONE CLOCK	FF&E CEQ PACKAGE	
AC11	1	UNITED STATES FLAG, POLE, & STAND	FF&E CEQ PACKAGE	
AC12	1	NAVY FLAG, POLE, & STAND	FF&E CEQ PACKAGE	
AC13	32	TWIN MATTRESS	FF&E CEQ PACKAGE	NOT SHOWN ON PLAN. PROVIDE (32) FOR THE (16) BD01 BUNK BEDS.
AC14	40	BED IN A BAG	FF&E CEQ PACKAGE	NOT SHOWN ON PLAN. PROVIDE (32) FOR THE (16) BD01 BUNK BEDS & (8) ATTIC STOCK.
AP01	1	COFFEE MACHINE	FF&E CEQ PACKAGE	
AP02	1	WATER & ICE MACHINE	FF&E CEQ PACKAGE	
AP03	2	MICROWAVE	FF&E CEQ PACKAGE	
AP04	1	REFRIGERATOR/FREEZER	FF&E CEQ PACKAGE	
AP05	1	UNDERCOUNTER REFRIGERATOR	FF&E CEQ PACKAGE	
AP06	1	CLOTHING WASHER/DRYER	FF&E CEQ PACKAGE	
AP07	1	MRE REFRIGERATOR	FF&E CEQ PACKAGE	
AW01	7	ARTWORK, 40"W X 60"H	FF&E CEQ PACKAGE	
BD01	16	BUNK BED	FF&E CEQ PACKAGE	
BD02	3	COMMAND BOARD, 8" W x 60" H	FF&E CEQ PACKAGE	
BD03	1	READ BOARD, 72"W x 48"H	FF&E CEQ PACKAGE	
C01	38	TASK CHAIR	FF&E CEQ PACKAGE	
C02	15	GUEST CHAIR	FF&E CEQ PACKAGE	
C03	51	TRAINING CHAIR	FF&E CEQ PACKAGE	
C04	12	CAFE STACKING CHAIR	FF&E CEQ PACKAGE	
C05	1	WORKBENCH STOOL	FF&E CEQ PACKAGE	
C06	1	WELLNESS LOUNGE CHAIR	FF&E CEQ PACKAGE	
C07	1	ARMORY TASK CHAIR	FF&E CEQ PACKAGE	

FF&E SCHEDULE

CODE	COUNT	DESCRIPTION	PROVIDED/INSTALLED	COMMENTS
EQ01	2	FIRE EXTINGUISHER, 5 LB CAPACITY	FF&E CEQ PACKAGE	COORDINATE WITH FIRE EXTINGUISHER CABINET OR WALL BRACKET, REFER TO FIRE PROTECTION & ARCHITECTURAL DRAWINGS
EQ03	4	SHOWER HOOKS & SHOWER CURTAIN, ACCESSORY	FF&E CEQ PACKAGE	
OF01	2	OFFICE DESK TYPICAL 1	FF&E CEQ PACKAGE	
OF02	3	OFFICE DESK TYPICAL 2	FF&E CEQ PACKAGE	
OF03	3	OFFICE DESK TYPICAL 3	FF&E CEQ PACKAGE	
PB01	4	PEGBOARD, 16"W x 32"H	FF&E CEQ PACKAGE	
PP01	11	POWER POLE, WORKSTATION	FF&E CEQ PACKAGE	
ST01	10	UTILITY SHELVING,48"W X 24"D X 84"H	FF&E CEQ PACKAGE	
ST02	23	UTILITY 2-DOOR STORAGE CABINET, 48"W X 24"D X 84"H	FF&E CEQ PACKAGE	
ST03	10	WEAPONS RACK LOCKER, 42"W X 15"D X 48"H	FF&E CEQ PACKAGE	
ST04	4	WEAPONS RACK LOCKER, 42"W X 15"D X 64.5"H	FF&E CEQ PACKAGE	
ST05	2	PRINT & EQUIPMENT STATION, 96"W X 24"D	FF&E CEQ PACKAGE	
ST06	1	3H BOOKCASE, 36"W X 40"H	FF&E CEQ PACKAGE	
T01	3	MEETING TABLE, 60W X 30D	FF&E CEQ PACKAGE	
T02	1	MEETING TABLE, 36"W X 36"D	FF&E CEQ PACKAGE	
T03	25	NESTING TRAINING TABLE, 60"W X 24"D	FF&E CEQ PACKAGE	
T04	6	CAFE TABLE	FF&E CEQ PACKAGE	
T05	1	OCCASIONAL TABLE	FF&E CEQ PACKAGE	
WB01	1	WORKBENCH, 72"W X 30"D	FF&E CEQ PACKAGE	
WS01	26	WORKSTATION 6'-0" X 6'-0"	FF&E CEQ PACKAGE	
WS02	4	WORKSTATION 8'-0" X 8'-0"	FF&E CEQ PACKAGE	
WS03	2	WORKSTATION 8'-0" X 10'-0"	FF&E CEQ PACKAGE	
GOVERNMENT FURNISHED / GOVERNMENT INSTALLED (GFGI) EQUIPMENT				
E01	4	PRINTER	GFGI	
E02	2	COPIER / MFD MULTI-FUNCTION DEVICE	GFGI	
E03	3	SHREDDER	GFGI	
E04	4	FAX MACHINE	GFGI	
E05	1	SCANNER	GFGI	
E06	3	RADIO CHARGING STATION	GFGI	
E07	4	SAFE	GFGI	
E08	2	PORTABLE CLEARING BARREL	GFGI	
E09	1	LIGHTNING DETECTION SYSTEM EQUIPMENT & MONITOR	GFGI	

GENERAL SHEET NOTES

A. FURNITURE, FIXTURES, AND EQUIPMENT (FF&E) SCHEDULE ON THIS SHEET LISTS FF&E TAGS, DESCRIPTIONS AND QUANTITIES.

B. REFER TO I-401 & I-402 FOR OFFICE AND WORKSTATION TYPICAL PLANS AND ISOMETRIC DRAWINGS.

C. FURNITURE, FIXTURES, AND EQUIPMENT (FF&E) INDICATED IS PROVIDED FOR COORDINATION PURPOSES ONLY.

D. FF&E IS NOT PART OF THE CONSTRUCTION BASE BID CONTRACT. THE FF&E PACKAGE WILL BE CONTRACTOR FURNISHED/CONTRACTOR PROVIDEDED (CFCI) AND WILL BE FUNDED SEPARATELY THROUGH A PLANNED MODIFICATION TO THE CONSTRUCTION CONTRACT. REFER TO THE FF&E PACKAGE FOR FURTHER INFORMATION.

E.PROVIDE MINIMAL HEIGHT MODESTY PANELS WHERE PANELS ARE ADJACENT TO WALLS TO ALLOW EASY ACCESS TO WALL OUTLETS.

F. MAINTAIN A 44" CLEAR PASSAGEWAY AROUND MAIN PATHS, TYPICAL.

G. VERIFY FIELD CONDITIONS PRIOR TO ORDERING FF&E TO ENSURE ACCURATE FIT OF ITEMS.

H. PROVIDE IN-WALL BLOCKING FOR WALL-MOUNTED FF&E.

I. PROVIDE ELECTRICAL, TELECOMMUNICATIONS, DATA, AUDIOVISUAL, AND PLUMBING CONNECTIONS REQUIRED FOR FF&E. REFER TO ELECTRICAL, TELECOMMUNICATIONS, AUDIOVISUAL, AND PLUMBING DRAWINGS.

J. COORDINATE FINAL LOCATIONS OF OUTLETS WITH FF&E MANUFACTURER'S REQUIREMENTS.

K. PROVIDE JUNCTION BOX FOR POWER IN-FEED CONNECTION TO SYSTEMS FURNITURE PP-01 POWER POLE WITH FLEXIBLE CONDUIT "POWER WHIP". COORDINATE POWER REQUIREMENTS WITH ELECTRICAL DRAWINGS AND AWARDED MANUFACTURER PRIOR TO COMMENCING WITH WORK.

L. COORDINATE THERMOSTAT AND FIRE EXTINGUISHER CABINET LOCATIONS WITH FURNITURE AND SYSTEMS FURNITURE PANELS.

M. REFER TO AV (TA) PLAN AND ELEVATIONS AV EQUIPMENT TYPES AND LOCATIONS. COORDINATE AV FLATSCREEN MONITOR MOUNTING HEIGHT WITH ELECTRICAL AND DATA CONNECTIONS.

N. MOUNT MARKER BOARDS AT 5'-6" ON CENTER, UON.

O. MOUNT WALL CLOCKS AT 8'-6" AFF, UON.

P. ACCESSORIES OF TRASH BINS, RECYCLE BINS, & TASK LIGHTS ARE NOT SHOWN ON PLANS. PROVIDE (1) TRASH BIN, (1) RECYCLE BIN, & (1) TASK LIGHT PER EACH OFFICE AND WORKSTATION. PROVIDE (1) TRASH BIN & (1) RECYCLE BIN PER EACH BUNK ROOM.

Q. FIRE EXTINGUISHERS ARE PROVIDED AS PART OF THE FF&E. REFER TO THE FF&E PACKAGE FOR EXTINGUISHER SPECIFICATIONS. REFER TO FIRE PROTECTION AND ARCHITECTURAL DRAWINGS FOR FIRE EXTINGUISHER CABINETS & WALL BRACKETS TYPES AND LOCATIONS.

R. DESIGNER OF RECORD (DOR) WILL BE NOTIFIED OF DISCREPANCIES OR INTERFERENCE THAT WOULD REQUIRE CHANGES TO THE LAYOUT.

SHEET KEYNOTES

1. MOUNT MARKERBOARD ABOVE FURNITURE/MILLWORK.
2. REFER TO STRUCTURAL DRAWINGS FOR HIGH DENSITY FILING SLAB DEPRESSION.
3. AUDIO VISUAL EQUIPMENT; REFER TO AV PLAN AND ELEVATIONS OR AV EQUIPMENT TYPES, LOCATIONS AND MOUNTING HEIGHTS.
4. PP01 POWER POLE, REFER TO FF&E PACKAGE.
5. REFER TO EP101 FOR EQUIPMENT CONNECTION TO FLOOR BOX AND CONDUIT.
6. PROVIDE TBA-03 HOOK AND TBA-10 FULL LENGTH MIRROR. REFER TO TOILET / BATH ACCESSORY (TBA) SCHEDULE ON SHEET A-401.

FURNITURE, FIXTURES & EQUIPMENT (FF&E) LEGEND

C1 — FURNITURE ITEM
FURNITURE CATEGORY

EQ1 — EQUIPMENT ITEM
EQUIPMENT CATEGORY

0 4' 8' 16' 24'
1/8" = 1'-0"

PLAN NORTH

SYM	DESCRIPTION	DATE	APPR

NAVFAC

COMMONWEALTH OF VIRGINIA
N.L. Miller
NATALIE LOYA MILLER
Cert. No. 0412001229
6/25/25
CERTIFIED INTERIOR DESIGNER
SEAL

Jacobs
1100 NORTH GLEBE ROAD
SUITE 500
ARLINGTON, VIRGINIA 22201
571.218.1000
FAX: 571.218.1600

A/E INFO

APPROVED
FOR COMMANDER NAVFAC 8/14/2025

ACTIVITY
APPROVED BY LCDR ELIZABETH OLOKODE NAVFAC NLON FEAD DIRECTOR NEW LONDON, GROTON, CT

SATISFACTORY TO DATE 05/27/2025

DES	NM	DRW	AW	CHK	AB
PM/DM	SMS/ CWJ				
BRANCH MANAGER	DJD				
CHIEF ENG/ARCH	JWJ				
FIRE PROTECTION	HPN				

NAVAL FACILITIES ENGINEERING SYSTEMS COMMAND
NAVAL STATION - NORFOLK, VA

DEPARTMENT OF THE NAVY
NAVAL FACILITIES ENGINEERING SYSTEMS COMMAND - MID-ATLANTIC
MID-ATLANTIC

NAVAL SUBMARINE BASE NEW LONDON
GROTON, CONNECTICUT
P-1102 WEAPONS MAGAZINE & ORDNANCE OPERATIONS FACILITY
OPERATIONS

FF&E PLAN & SCHEDULE

SCALE: AS NOTED
EPROJECT NO.: 1667770
CONSTR. CONTR. NO.
NAVFAC DRAWING NO. 12893989
SHEET 39 OF 140

I-101

6/20/2025 10:30:01 AM I-101
\\dc1-vs01\Hebp\PDZE1629\ARCHBLDG-1667770-A-BIM.rvt

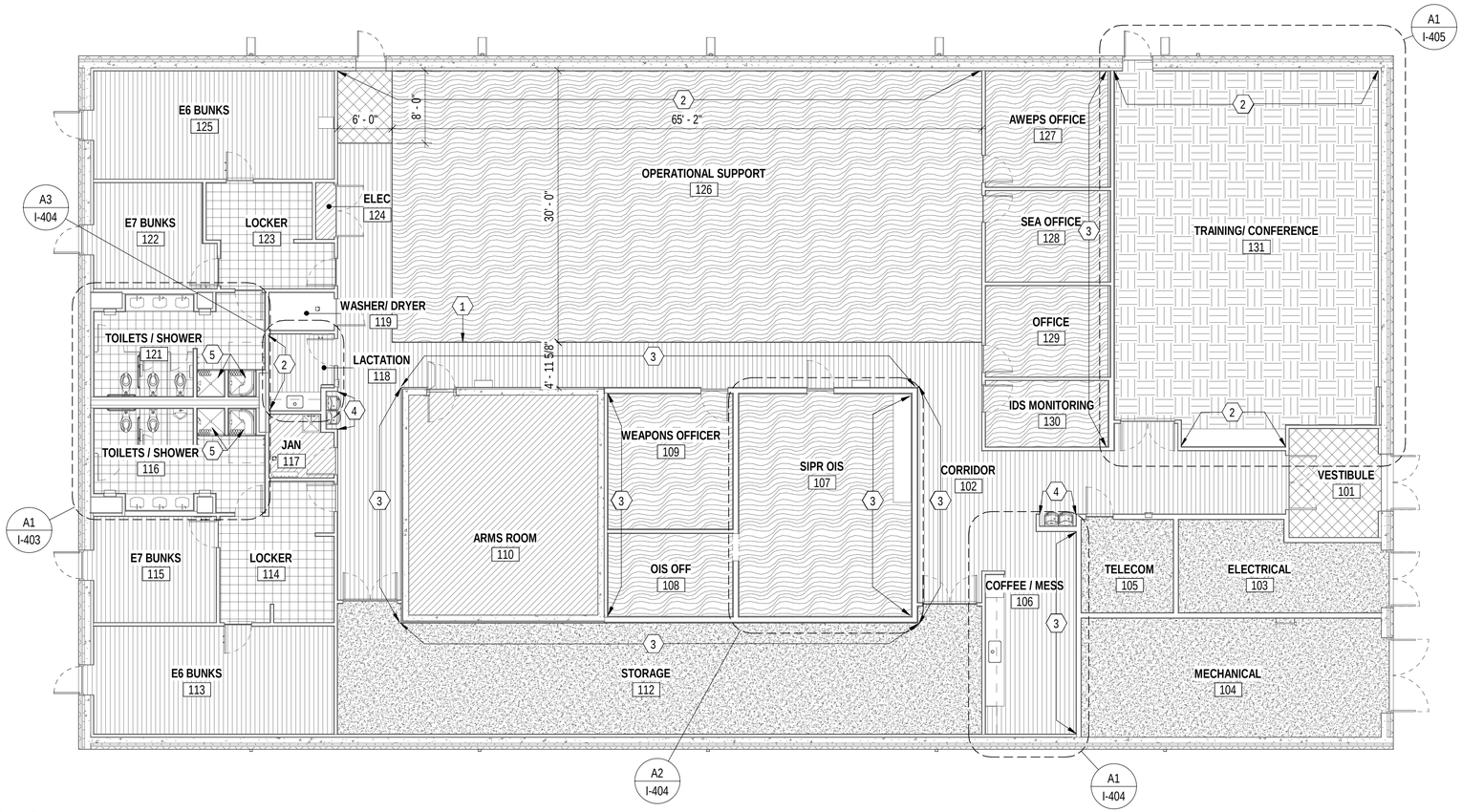

B1 FINISH PLAN
1/8" = 1'-0"

GENERAL SHEET NOTES

A. REFER TO I-601 FOR INTERIOR MATERIALS FINISH SCHEDULE.

B. REFER TO ARCHITECTURE DRAWINGS FOR REFLECTED CEILING PLANS AND DETAILS.

C. FIELD VERIFY DIMENSIONS PRIOR TO ORDERING MATERIALS AND FINISHES.

D. TRANSITIONS OCCUR AT THE CENTERLINE OF THE DOOR, DOORWAY OR CEILING LINE, UNLESS OTHERWISE NOTED.

E. INSTALL CORNER GUARD CG-1 AT ALL OUTSIDE GYPSUM BOARD CORNERS. DO NOT INSTALL ON CMU.

SHEET KEYNOTES

1. CARPET (CPT-1) TO LUXURY VINYL TILE (RF-1) FLOORING TRANSITION. REFER TO I-501 FOR DETAILS.
2. ACCENT PAINT, PT-6.
3. ACCENT PAINT, PT-5.
4. PAINT ALL ALCOVE WALLS PT-5.
5. PROVIDE SOLID SURFACE SHOWER PAN. COLOR TO MATCH ADJACENT FLOOR TILE. REFER TO PLUMBING SCHEDULE ON SHEET P-601.

FINISH LEGEND

CPT-1, CPT-2, CPT-3, PFT-1, RF-1, RF-2, SC-1

FINISH ABBREVIATIONS

CEILING FINISHES
- ACP — ACOUSTICAL CEILING PANEL
- EXP — EXPOSED TO STRUCTURE
- GYP — GYPSUM BOARD
- PT — PAINT

WALL FINISHES
- PT — PAINT
- PWT — PORCELAIN WALL TILE

BASE FINISHES
- MCB — METAL COVE BASE
- PTB — PORCELAIN TILE BASE
- RB — RESILIENT BASE

FLOOR FINISHES
- CPT — CARPET TILE
- PFT — PORCELAIN FLOOR TILE
- RF — RESILIENT FLOORING
- SC — SEALED CONCRETE

0 4' 8' 16' 24'
1/8" = 1'-0"

PLAN NORTH

ROOM FINISH SCHEDULE

ROOM NO.	ROOM NAME	FLOOR FINISH	BASE FINISH	WALL FINISH	CEILING FINISH	NOTES
101	VESTIBULE	CPT-3	RB-1	PT-1	ACP-1	
102	CORRIDOR	RF-1	RB-1	PT-1, PT-5	ACP-1	GYP, PT-2 CEILING AT WATER FOUNTAIN ALCOVE
103	ELECTRICAL	SC-1	RB-1	PT-1	EXP	
104	MECHANICAL	SC-1	RB-1	PT-1	EXP	
105	TELECOM	SC-1	RB-1	PT-1	EXP	
106	COFFEE / MESS	RF-1	RB-1	PT-1, PT-5	ACP-1	
107	SIPR OIS	CPT-1	RB-1	PT-1, PT-5	GYP, PT-2	
108	OIS OFF	CPT-1	RB-1	PT-1, PT-5	GYP, PT-2	
109	WEAPONS OFFICER	CPT-1	RB-1	PT-1, PT-5	GYP, PT-2	
110	ARMS ROOM	RF-2	RB-1	PT-7	EXP	
112	STORAGE	SC-1	RB-1	PT-7	EXP	
113	E6 BUNKS	RF-1	RB-1	PT-4	ACP-1	
114	LOCKER	PFT-1	PTB-1	PT-4	ACP-3	
115	E7 BUNKS	RF-1	RB-1	PT-4	ACP-1	
116	TOILETS / SHOWER	PFT-1	MCB-1	PWT-1, PWT-2	GYP, PT-2	
117	JAN	RF-2	RB-1	PT-7	GYP, PT-2	
118	LACTATION	RF-1	RB-1	PT-1, PT-6	ACP-1	
119	WASHER/ DRYER	RF-2	RB-1	PT-1	ACP-3	

ROOM FINISH SCHEDULE

ROOM NO.	ROOM NAME	FLOOR FINISH	BASE FINISH	WALL FINISH	CEILING FINISH	NOTES
121	TOILETS / SHOWER	PFT-1	MCB-1	PWT-1, PWT-2	GYP, PT-2	
122	E7 BUNKS	RF-1	RB-1	PT-4	ACP-1	
123	LOCKER	PFT-1	PTB-1	PT-4	ACP-3	
124	ELEC	RF-2	N/A	PT-1	EXP	
125	E6 BUNKS	RF-1	RB-1	PT-4	ACP-1	
126	OPERATIONAL SUPPORT	CPT-1, RF-1, CPT-3	RB-1	PT-1, PT-5, PT-6	ACP-1	GYP, PT-2 BULKHEADS & CEILING AT WATER FOUNTAIN ALCOVE
127	AWEPS OFFICE	CPT-1	RB-1	PT-1, PT-5	ACP-1	
128	SEA OFFICE	CPT-1	RB-1	PT-1, PT-5	ACP-1	
129	OFFICE	CPT-1	RB-1	PT-1, PT-5	ACP-1	
130	IDS MONITORING	CPT-1	RB-1	PT-1, PT-5	GYP, PT-2	
131	TRAINING/ CONFERENCE	CPT-2	RB-1	PT-1, PT-6	ACP-2	

SYM	DESCRIPTION	DATE	APPR

NAVFAC

COMMONWEALTH OF VIRGINIA
N.L. Miller
NATALIE LOYA MILLER
Cert. No. 0412001229
6/23/25
CERTIFIED INTERIOR DESIGNER
SEAL

Jacobs
1100 NORTH GLEBE ROAD
SUITE 500
ARLINGTON, VIRGINIA 22201
571.218.1000
FAX: 571.218.1600
A/E INFO

APPROVED
FOR COMMANDER NAVFAC 8/14/2025
ACTIVITY
APPROVED BY LCDR ELIZABETH OLOKODE NAVFAC NLON FEAD DIRECTOR NEW LONDON, GROTON, CT
SATISFACTORY TO DATE 05/27/2025

DES	NM	DRW	AW	CHK	AB

PM/DM	SMS/ CWJ
BRANCH MANAGER	DJD
CHIEF ENG/ARCH	JWJ
FIRE PROTECTION	HPN

DEPARTMENT OF THE NAVY
NAVAL FACILITIES ENGINEERING SYSTEMS COMMAND - MID-ATLANTIC
NAVAL FACILITIES ENGINEERING SYSTEMS COMMAND
MID-ATLANTIC
NAVAL STATION - NORFOLK, VA
NAVAL SUBMARINE BASE NEW LONDON
GROTON, CONNECTICUT
P-1102 WEAPONS MAGAZINE & ORDNANCE OPERATIONS FACILITY
OPERATIONS
INTERIOR FINISH PLAN & ROOM FINISH SCHEDULE

SCALE: AS NOTED
EPROJECT NO.: 1667770
CONSTR. CONTR. NO.
NAVFAC DRAWING NO. 12893990
SHEET 40 OF 140
I-102

6/20/2025 10:30:09 AM
I-102
\\AL1vs01\Hdsp\PDZE1929\ARCH\BLDG-1667770-A-BIM.rvt

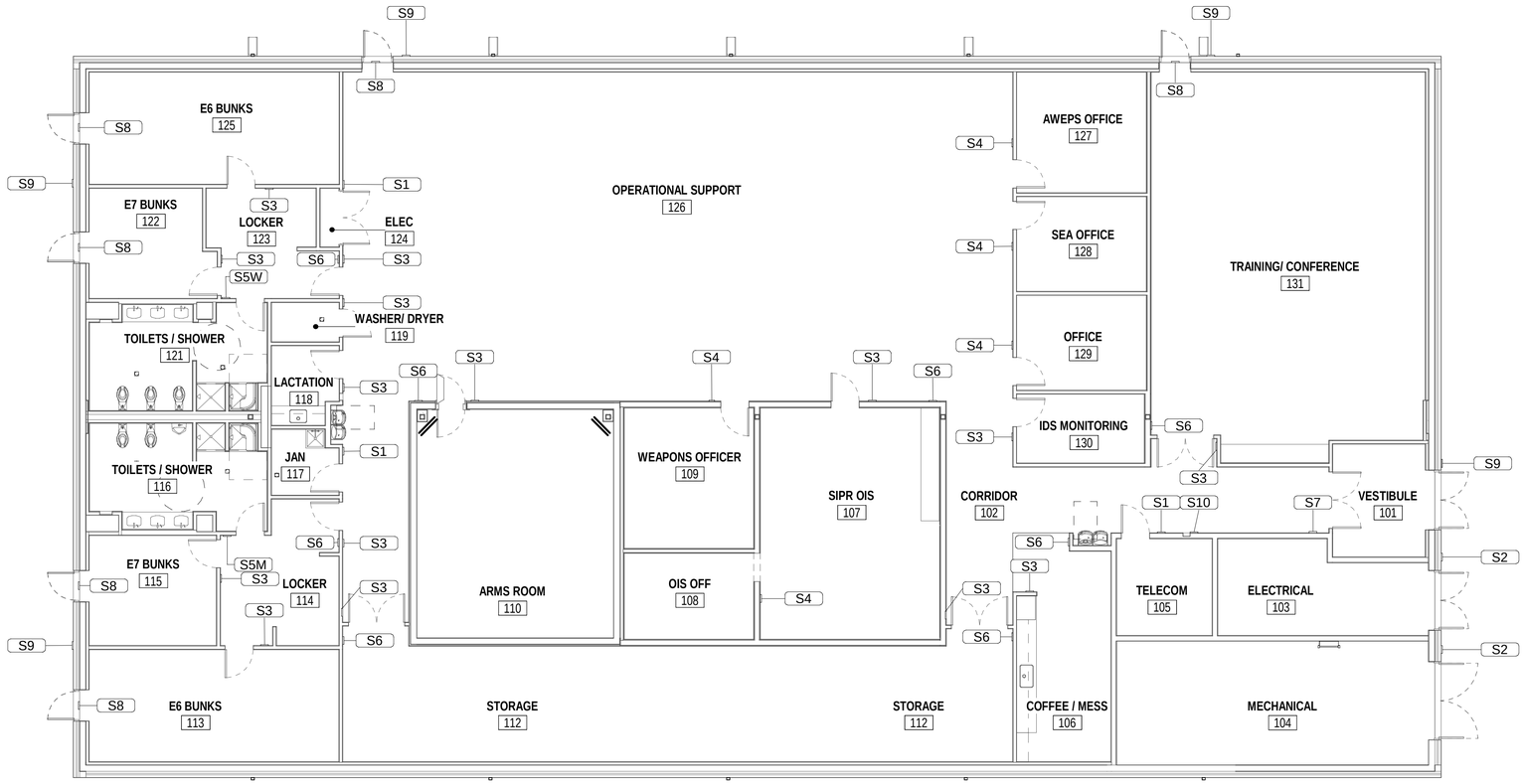

B1 1ST FLOOR SIGNAGE PLAN

1/8" = 1'-0"

INTERIORS SIGNAGE SCHEDULE

ROOM NUMBER	ROOM NAME	SIGN TYPE	SIGN NUMBER	COMMENTS
		S1 UTILITY	S-124	
		S3 PERMANENT ROOM	S-112A	
101	VESTIBULE	S2 EXTERIOR PERMANENT ROOM	S-103	
101	VESTIBULE	S9 REGULATORY SIGN	S-101	
102	CORRIDOR	S3 PERMANENT ROOM	S-112B	
102	CORRIDOR	S7 BUILDING DIRECTORY	S-102A	
102	CORRIDOR	S10 FIRE EXTINGUISHER	S-102B	
104	MECHANICAL	S2 EXTERIOR PERMANENT ROOM	S-104	
105	TELECOM	S1 UTILITY	S-105	
106	COFFEE / MESS	S3 PERMANENT ROOM	S-106A	
106	COFFEE / MESS	S6 EVACUATION SIGN	S-106B	
107	SIPR OIS	S3 PERMANENT ROOM	S-107	
108	OIS OFF	S4 WORK STATION SIGN	S-108	
109	WEAPONS OFFICER	S4 WORK STATION SIGN	S-109	
110	ARMS ROOM	S3 PERMANENT ROOM	S-110	
112	STORAGE	S6 EVACUATION SIGN	S-112C	
112	STORAGE	S6 EVACUATION SIGN	S-112D	
113	E6 BUNKS	S3 PERMANENT ROOM	S-113A	
113	E6 BUNKS	S8 TACTILE EXIT	S-113B	
114	LOCKER	S3 PERMANENT ROOM	S-114A	
114	LOCKER	S6 EVACUATION SIGN	S-114B	
115	E7 BUNKS	S3 PERMANENT ROOM	S-115A	
115	E7 BUNKS	S9 REGULATORY SIGN	S-115B	
115	E7 BUNKS	S8 TACTILE EXIT	S-115C	
116	TOILETS / SHOWER	S5M MEN'S RESTROOM	S-116	
117	JAN	S1 UTILITY	S-117	
118	LACTATION	S3 PERMANENT ROOM	S-118	

INTERIORS SIGNAGE SCHEDULE

ROOM NUMBER	ROOM NAME	SIGN TYPE	SIGN NUMBER	COMMENTS
119	WASHER/ DRYER	S3 PERMANENT ROOM	S-119	
121	TOILETS / SHOWER	S5W WOMEN'S RESTROOM	S-121	
122	E7 BUNKS	S3 PERMANENT ROOM	S-122A	
122	E7 BUNKS	S8 TACTILE EXIT	S-122B	
123	LOCKER	S3 PERMANENT ROOM	S-123A	
123	LOCKER	S6 EVACUATION SIGN	S-123B	
125	E6 BUNKS	S3 PERMANENT ROOM	S-125A	
125	E6 BUNKS	S9 REGULATORY SIGN	S-125B	
125	E6 BUNKS	S8 TACTILE EXIT	S-125C	
126	OPERATIONAL SUPPORT	S9 REGULATORY SIGN	S-126A	
126	OPERATIONAL SUPPORT	S6 EVACUATION SIGN	S-126B	
126	OPERATIONAL SUPPORT	S6 EVACUATION SIGN	S-126C	
126	OPERATIONAL SUPPORT	S8 TACTILE EXIT	S-126D	
127	AWEPS OFFICE	S4 WORK STATION SIGN	S-127	
128	SEA OFFICE	S4 WORK STATION SIGN	S-128	
129	OFFICE	S4 WORK STATION SIGN	S-129	
130	IDS MONITORING	S3 PERMANENT ROOM	S-130	
131	TRAINING/ CONFERENCE	S3 PERMANENT ROOM	S-131A	
131	TRAINING/ CONFERENCE	S9 REGULATORY SIGN	S-131B	
131	TRAINING/ CONFERENCE	S6 EVACUATION SIGN	S-131C	
131	TRAINING/ CONFERENCE	S8 TACTILE EXIT	S-131D	

GENERAL SHEET NOTES

A. SEE TECHNICAL SPECIFICATIONS FOR FURTHER SIGNAGE INFORMATION. INTERIOR SIGNAGE IS BLACK BACKGROUND WITH WHITE CHARACTERS AND PICTURES. EXTERIOR SIGNAGE FINISH TO MATCH BASE STANDARD. CONTRACTING OFFICER TO APPROVE FINAL SIGNAGE FINISHES PRIOR TO ORDERING AND INSTALLATION.

B. REFER TO I-502 FOR SIGNAGE MOUNTING DETAILS.

C. PRIMARY TEXT SIZES ARE AS NOTED IN SIGNAGE DETAILS. SIGN SIZES MAY INCREASE TO ACCOMMODATE REQUIRED AND APPROVED FINAL MESSAGES. TEXT LOCATIONS SHOULD BEST FIT SIGN TYPES.

D. SIGNS MOUNTED ON GLASS HAVE A MATCHING BACKER PLATE.

E. SIGNS MOUNTED ON THE EXTERIOR ARE CONSTRUCTED OF DURABLE FACTORY-FINISHED BAKED ENAMEL WITH REFLECTIVE SHEETING AND CONFORM TO MANUFACTURER RECOMMENDATIONS FOR APPLICATION. FASTENERS ARE CONCEALED AND RUST PROOF.

F. PROVIDE REQUIRED MOUNTINGS / HANGING MECHANISMS FOR SPECIFIED SIGNS PER MANUFACTURERS RECOMMENDATIONS FOR LOAD.

G. SURFACE APPLIED VINYL LETTERS OR GRAPHICS THAT CAN BE RUBBED OFF OR DAMAGED AND EXPOSED PAPER INSERTS ARE PROHIBITED.

H. CONTRACTOR TO PROVIDE SOFTWARE, ADDITIONAL MESSAGE SLOTS FOR FUTURE INSERTS AND ATTIC STOCK FOR SIGNS AND BLANK PAPER; COORDINATE WITH CONTRACTING OFFICER.

I. INTERIOR MODULAR SIGNS HAVE REMOVABLE END CAPS; SOME WITH PAPER CARRIERS FOR IN-HOUSE PRINTING CAPABILITY. NOT APPLICABLE FOR EXTERIOR USE.

J. UNLESS NOTED OTHERWISE, TEXT ON SIGNS ARE UPPER CASE.

K. SIGN VERBIAGE SHOWN ARE DESIGN SUGGESTIONS ONLY. SIGNAGE CONTRACTOR TO COORDINATE FINAL SIGN VERBIAGE, IN FIELD, WITH CONTRACTING OFFICER PRIOR TO ORDERING AND INSTALLATION.

L. SIGNAGE CONTRACTOR TO PROVIDE FLAG SIGNS INDICATING FIRE EXTINGUISHER, AED AND FIRST AID EQUIPMENT LOCATIONS, MOUNTED ABOVE EACH ITEM. LOCATE IN FIELD.

M. ENGLISH CHARACTERS ARE HELVETICA NEUE.

N. WHERE REQUIRED, CONTRACTOR TO PROVIDE TACTILE / BRAILLE ON SIGNAGE TO MEET ACCESSIBILITY REQUIREMENTS FOR NON-TACTILE FACILITIES.

SIGNAGE LEGEND

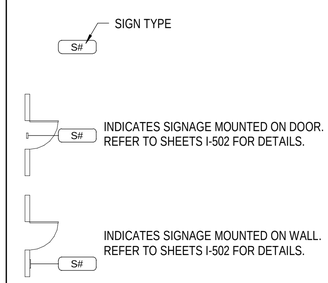

0 4' 8' 16' 24'
1/8" = 1'-0"

PLAN NORTH

SYM	DESCRIPTION	DATE	APPR

NAVFAC

COMMONWEALTH OF VIRGINIA
N.L. Miller
NATALIE LOYA MILLER
Cert. No. 0412001229
6/25/25
CERTIFIED INTERIOR DESIGNER
SEAL

Jacobs
1100 NORTH GLEBE ROAD
SUITE 500
ARLINGTON, VIRGINIA 22201
571.218.1000
FAX: 571.218.1600

A/E INFO

APPROVED
FOR COMMANDER NAVFAC 8/14/2025

ACTIVITY
APPROVED BY LCDR ELIZABETH OLOKODE NAVFAC NLON FEAD DIRECTOR NEW LONDON, GROTON, CT

SATISFACTORY TO DATE 05/27/2025

DES NM DRW AW CHK AB
PM/DM SMS/ CWJ
BRANCH MANAGER DJD
CHIEF ENG/ARCH JWJ
FIRE PROTECTION HPN

DEPARTMENT OF THE NAVY
NAVAL FACILITIES ENGINEERING SYSTEMS COMMAND - MID-ATLANTIC
NAVAL FACILITIES ENGINEERING SYSTEMS COMMAND
MID-ATLANTIC
NAVAL STATION , NORFOLK, VA
NAVAL SUBMARINE BASE NEW LONDON
GROTON, CONNECTICUT
P-1102 WEAPONS MAGAZINE & ORDNANCE OPERATIONS FACILITY
OPERATIONS
SIGNAGE PLAN & SCHEDULE

SCALE: AS NOTED
EPROJECT NO.: 1667770
CONSTR. CONTR. NO.
NAVFAC DRAWING NO.
12893991
SHEET 41 OF 140
I-103

6/20/2025 10:30:19 AM I-103
\\bk1vs01\Revit\PROJECTS\1629\ARCH\BLDG-1667770-A-BIM.rvt

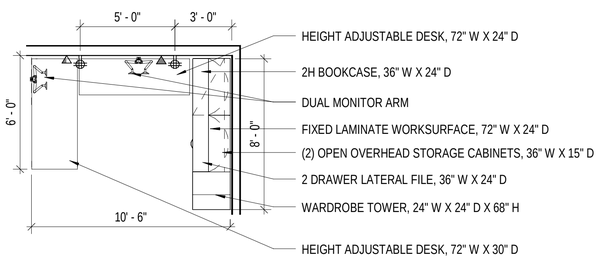

C1 OF01 OFFICE PLAN
1/4" = 1'-0"

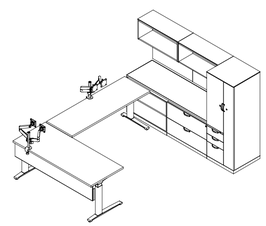

C2 OF01 OFFICE 3D ISOMETRIC VIEW

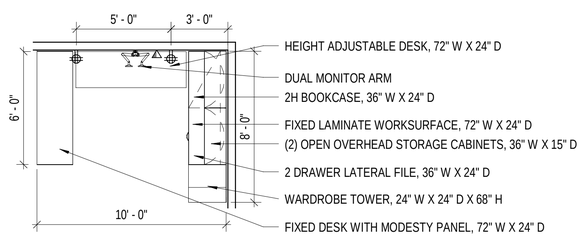

B1 OF02 OFFICE PLAN
1/4" = 1'-0"

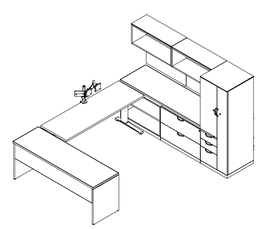

B2 OF02 OFFICE 3D ISOMETRIC VIEW

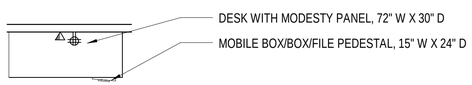

A1 OF03 OFFICE PLAN
1/4" = 1'-0"

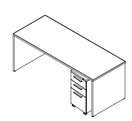

A2 OF03 OFFICE 3D ISOMETRIC VIEW

GENERAL SHEET NOTES

A. REFER TO I-601 FOR FURNITURE, FIXTURES, AND EQUIPMENT (FF&E) SCHEDULE FOR TAG DESCRIPTIONS AND QUANTITIES.

B. FURNITURE, FIXTURES, AND EQUIPMENT (FF&E) INDICATED IS PROVIDED FOR COORDINATION PURPOSES ONLY.

C. FF&E IS NOT PART OF THE CONSTRUCTION BASE BID CONTRACT. THE FF&E PACKAGE WILL BE CONTRACTOR FURNISHED/CONTRACTOR PROVIDEDED (CFCI) AND WILL BE FUNDED SEPARATELY THROUGH A PLANNED MODIFICATION TO THE CONSTRUCTION CONTRACT. REFER TO THE FF&E PACKAGE FOR FURTHER INFORMATION.

D. PROVIDE MINIMAL HEIGHT MODESTY PANELS WHERE PANELS ARE ADJACENT TO WALLS TO ALLOW EASY ACCESS TO WALL OUTLETS.

E. PROVIDE GROMMETS AT EACH FIXED WORKSURFACE.

F. PROVIDE WIRE MANAGEMENT, WORKSURFACE MOUNTED ELECTRICAL RECEPTACLE, CRASH LIMITER/SENSOR, AND 250 LB WEIGHT CAPACITY AT EACH HEIGHT ADJUSTABLE WORKSURFACE.

G. ALL STORAGE COMPONENTS KEYED ALIKE FOR EACH OFFICE OR WORKSTATION.

H. POWER, DATA AND VOICE OUTLETS ARE ILLUSTRATED ON OFFICE AND WORKSTATION TYPICALS FOR DESIGN INTENT & SYSTEMS FURNITURE COMPONENT COORDINATION WITH INFRASTRUCTURE. REFER TO ELECTRICAL AND TELECOM DRAWINGS FOR POWER AND DATA LOCATIONS.

I. OFFICE AND WORKSTATION SYSTEMS FURNITURE COMPONENTS ARE NOT TO OBSTRUCT POWER AND DATA WALL CONNECTIONS.

J. COORDINATE FINAL LOCATIONS OF OUTLETS WITH FF&E MANUFACTURER'S REQUIREMENTS.

K. PROVIDE JUNCTION BOX FOR POWER IN-FEED CONNECTION TO PANEL-BASED SYSTEMS FURNITURE WITH FLEXIBLE CONDUIT "POWER WHIP". COORDINATE POWER REQUIREMENTS WITH AWARDED MANUFACTURER PRIOR TO COMMENCING WITH WORK.

0 2' 4' 8' 12'
1/4" = 1'-0"

SYM	DESCRIPTION	DATE	APPR

NAVFAC

COMMONWEALTH OF VIRGINIA
N.L. Miller
NATALIE LOYA MILLER
Cert. No. 0412001229
6/23/25
CERTIFIED INTERIOR DESIGNER
SEAL

Jacobs
1100 NORTH GLEBE ROAD
SUITE 500
ARLINGTON, VIRGINIA 22201
571.218.1000
FAX: 571.218.1600
A/E INFO

APPROVED
FOR COMMANDER NAVFAC 8/14/2025
ACTIVITY
APPROVED BY LCDR ELIZABETH
CLOKODE NAVFAC NLON FEAD
DIRECTOR NEW LONDON, GROTON, CT
SATISFACTORY TO DATE 05/27/2025

DES	NM	DRW	AW	CHK	AB
PM/DM	SMS/ CWJ				
BRANCH MANAGER	DJD				
CHIEF ENG/ARCH	JWJ				
FIRE PROTECTION	HPN				

DEPARTMENT OF THE NAVY
NAVAL FACILITIES ENGINEERING SYSTEMS COMMAND
MID-ATLANTIC
NAVAL FACILITIES ENGINEERING SYSTEMS COMMAND - MID-ATLANTIC
NAVAL STATION - NORFOLK, VA
NAVAL SUBMARINE BASE NEW LONDON
GROTON, CONNECTICUT
P-1102 WEAPONS MAGAZINE & ORDNANCE OPERATIONS FACILITY
OPERATIONS
OFFICE PLANS & ISOMETRIC VIEWS

SCALE: AS NOTED
EPROJECT NO.: 1667770
CONSTR. CONTR. NO.
NAVFAC DRAWING NO.
12893992
SHEET 42 OF 140
I-401

6/20/2025 10:30:16 AM I-401
\\bc1vs01\fedsp\FDZE1\9284\RCH\BLDG-1667770-A-BIM.rvt

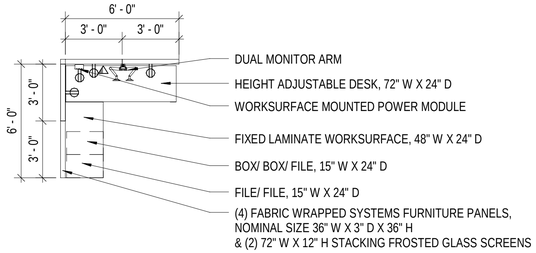

D1 WS01 WORKSTATION PLAN

1/4" = 1'-0"

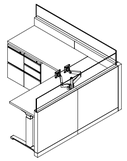

D2 WS01 WORKSTATION 3D ISOMETRIC VIEW

NTS

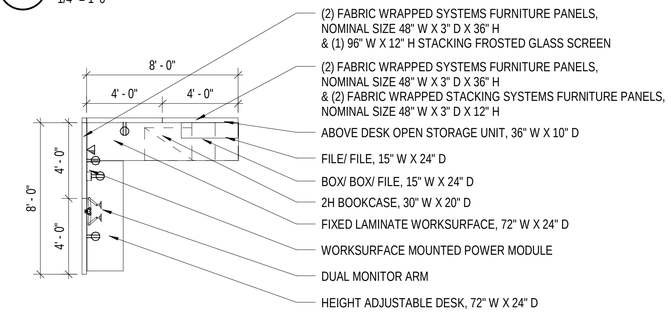

C1 WS02 WORKSTATION PLAN

1/4" = 1'-0"

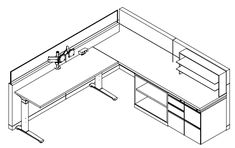

C2 WS02 WORKSTATION 3D ISOMETRIC VIEW

NTS

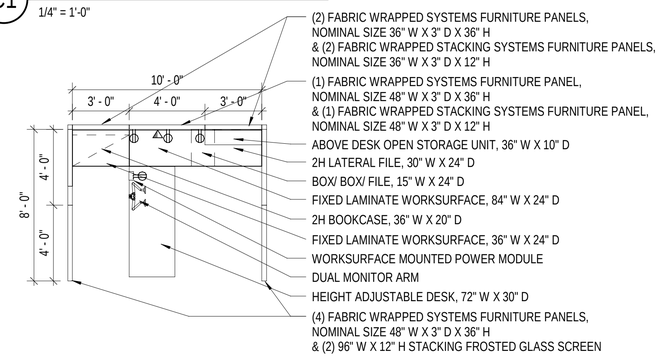

B1 WS03 WORKSTATION PLAN

1/4" = 1'-0"

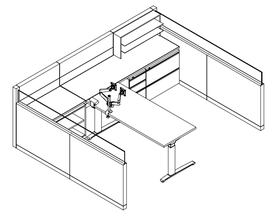

B2 WS03 WORKSTATION 3D ISOMETRIC VIEW

NTS

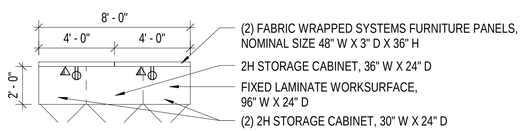

A1 ST05 PRINT & EQUIPMENT STATION PLAN

1/4" = 1'-0"

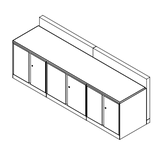

A2 ST05 PRINT STATION 3D ISOMETRIC VIEW

NTS

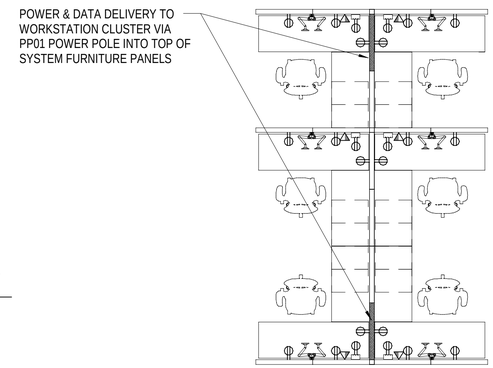

D4 WS01 WORKSTATION CLUSTER PLAN

1/4" = 1'-0"

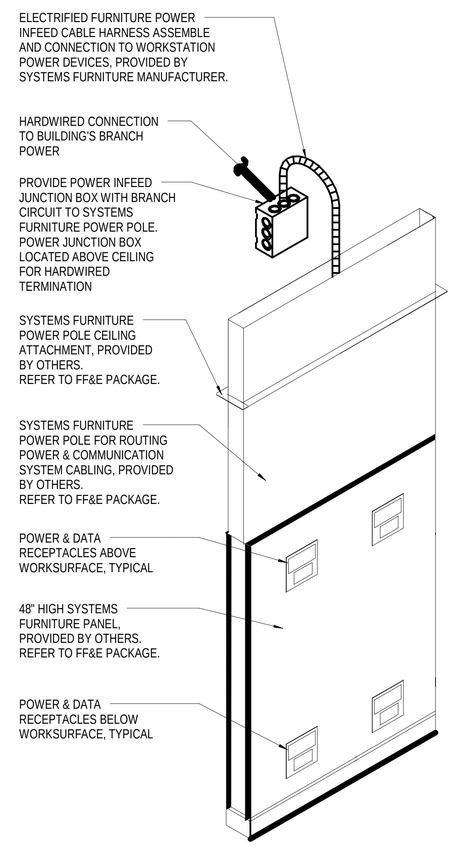

A3 SYSTEMS FURNITURE POWER POLE DETAIL

NTS

0 2' 4' 8' 12'

1/4" = 1'-0"

GENERAL SHEET NOTES

A. REFER TO I-601 FOR FURNITURE, FIXTURES, AND EQUIPMENT (FF&E) SCHEDULE FOR TAG DESCRIPTIONS AND QUANTITIES.

B. FURNITURE, FIXTURES, AND EQUIPMENT (FF&E) INDICATED IS PROVIDED FOR COORDINATION PURPOSES ONLY.

C. FF&E IS NOT PART OF THE CONSTRUCTION BASE BID CONTRACT. THE FF&E PACKAGE WILL BE CONTRACTOR FURNISHED/CONTRACTOR PROVIDEDED (CFCI) AND WILL BE FUNDED SEPARATELY THROUGH A PLANNED MODIFICATION TO THE CONSTRUCTION CONTRACT. REFER TO THE FF&E PACKAGE FOR FURTHER INFORMATION.

D. PROVIDE MINIMAL HEIGHT MODESTY PANELS WHERE PANELS ARE ADJACENT TO WALLS TO ALLOW EASY ACCESS TO WALL OUTLETS.

E. PROVIDE GROMMETS AT EACH FIXED WORKSURFACE.

F. PROVIDE WIRE MANAGEMENT, WORKSURFACE MOUNTED ELECTRICAL RECEPTACLE, CRASH LIMITER/SENSOR, AND 250 LB WEIGHT CAPACITY AT EACH HEIGHT ADJUSTABLE WORKSURFACE.

G. ALL STORAGE COMPONENTS KEYED ALIKE FOR EACH OFFICE OR WORKSTATION.

H. POWER, DATA AND VOICE OUTLETS ARE ILLUSTRATED ON OFFICE AND WORKSTATION TYPICALS FOR DESIGN INTENT & SYSTEMS FURNITURE COMPONENT COORDINATION WITH INFRASTRUCTURE. REFER TO ELECTRICAL AND TELECOM DRAWINGS FOR POWER AND DATA LOCATIONS.

I. OFFICE AND WORKSTATION SYSTEMS FURNITURE COMPONENTS ARE NOT TO OBSTRUCT POWER AND DATA WALL CONNECTIONS.

J. COORDINATE FINAL LOCATIONS OF OUTLETS WITH FF&E MANUFACTURER'S REQUIREMENTS.

K. PROVIDE JUNCTION BOX FOR POWER IN-FEED CONNECTION TO PANEL-BASED SYSTEMS FURNITURE WITH FLEXIBLE CONDUIT "POWER WHIP". COORDINATE POWER REQUIREMENTS WITH AWARDED MANUFACTURER PRIOR TO COMMENCING WITH WORK.

SYM	DESCRIPTION	DATE	APPR

NAVFAC

COMMONWEALTH OF VIRGINIA
N.L. Miller
NATALIE LOYA MILLER
Cert. No. 0412001229
6/23/25
CERTIFIED INTERIOR DESIGNER
SEAL

Jacobs
1100 NORTH GLEBE ROAD
SUITE 500
ARLINGTON, VIRGINIA 22201
571.218.1000
FAX: 571.218.1600
A/E INFO

APPROVED
FOR COMMANDER NAVFAC 8/14/2025

ACTIVITY
APPROVED BY LCDR ELIZABETH OLOKODE NAVFAC NLON FEAD DIRECTOR NEW LONDON, GROTON, CT

SATISFACTORY TO DATE	05/27/2025		
DES NM	DRW AW	CHK AB	
PM/DM	SMS/ CWJ		
BRANCH MANAGER	DJD		
CHIEF ENG/ARCH	JWJ		
FIRE PROTECTION	HPN		

DEPARTMENT OF THE NAVY
NAVAL FACILITIES ENGINEERING SYSTEMS COMMAND - MID-ATLANTIC
NAVAL FACILITIES ENGINEERING SYSTEMS COMMAND
MID-ATLANTIC
NAVAL STATION - NORFOLK, VA
NAVAL SUBMARINE BASE NEW LONDON
GROTON, CONNECTICUT
P-1102 WEAPONS MAGAZINE & ORDNANCE OPERATIONS FACILITY
OPERATIONS
WORKSTATION PLANS & ISOMETRIC VIEWS

SCALE:	AS NOTED
EPROJECT NO.:	1667770
CONSTR. CONTR. NO.	
NAVFAC DRAWING NO.	12893993
SHEET	43 OF 140

I-402

6/20/2025 10:30:21 AM I-402
\\dc1vs01\Redp\PDZE\6280\ARCH\BLDG-1667770-A-BIM.rvt

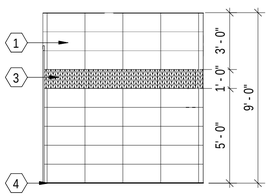

RESTROOM WALLS TO USE THE TILE PATTERN ABOVE UON.

C1 TYPICAL WALL TILE ELEVATION

1/4" = 1'-0" (A-401)

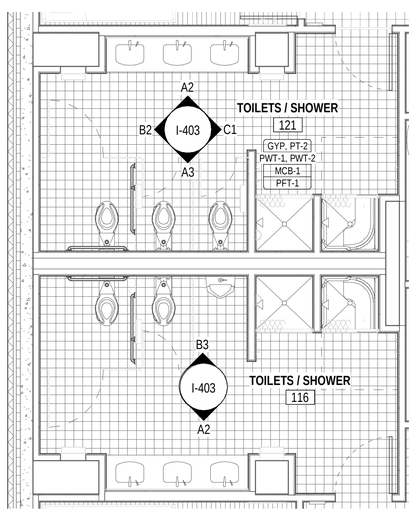

A1 ENLARGED RESTROOMS PLAN

1/4" = 1'-0" (I-102)

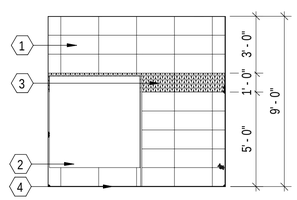

B2 RESTROOM STALL TILE TYPICAL ELEVATION

1/4" = 1'-0"

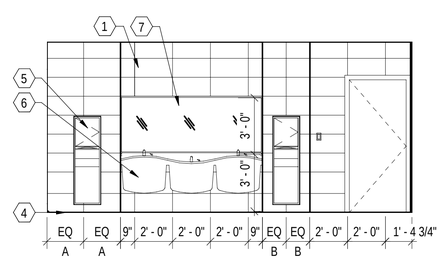

A2 RESTROOM SINK TILE TYPICAL ELEVATION

1/4" = 1'-0" (A-401)

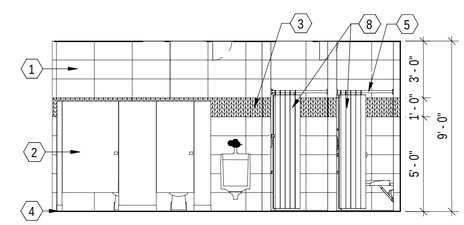

B3 MEN'S TOILETS/ SHOWER ROOM 116 ELEVATION

1/4" = 1'-0" (A-401)

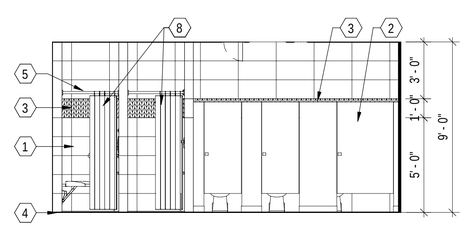

A3 WOMEN'S TOILETS/ SHOWER ROOM 121 ELEVATION

1/4" = 1'-0" (A-401)

GENERAL SHEET NOTES

A. REFER TO ARCHITECTURE (A) SHEETS FOR DOOR NUMBERS, ADDITIONAL DIMENSIONS, AND PARTITION TYPE DESIGNATIONS, IF NOT INDICATED ON ENLARGED PLAN.

B. REFER TO I-102 FOR INTERIORS FINISH PLAN & AND ROOM FINISH SCHEDULE.

C. REFER TO I-601 FOR INTERIOR MATERIAL FINISH SCHEDULE

D. REFER TO I-501 FOR INTERIORS MILLWORK DETAILS.

E. FF&E IS NOT IN CONTRACT AND SHOWN FOR COORDINATION ONLY. REFER TO I-101 FOR FF&E SCHEDULE. REFER TO FF&E PACKAGE SUBMITTED UNDER SEPARATE COVER FOR FF&E REQUIREMENTS.

F. REFER TO ARCHITECTURE (A) SHEET A-401 FOR TOILET / BATH ACCESSORIES (TBA) INFORMATION.

G. REFER TO AV (TA) PLAN AND ELEVATIONS AV EQUIPMENT TYPES AND LOCATIONS. COORDINATE AV FLATSCREEN MONITOR MOUNTING HEIGHT WITH ELECTRICAL AND DATA CONNECTIONS.

H. REFER TO PLUMBING (P) SHEETS FOR PLUMBING FIXTURES AND DETAILS.

I. FIELD VERIFY DIMENSIONS PRIOR TO ORDERING MATERIALS AND FINISHES.

J. WHERE WALL TILE IS PROVIDED, PROVIDE ANODIZED ALUMINUM TRIM PIECE AT OUTSIDE CORNERS.

SHEET KEYNOTES

1. PORCELAIN WALL TILE, PWT-1.
2. TOILET PARTITION, TBA-02. REFER TO ARCHITECTURE FOR TOILET ACCESSORIES SCHEDULE.
3. PORCELAIN MOSAIC WALL TILE, PWT-2.
4. METAL COVE BASE, MCB-1.
5. REFER TO ARCHITECTURE FOR TOILET ACCESSORIES SCHEDULE, TYP.
6. ABA COMPLIANT (3) STATION LAVATORY. REFER TO ARCHITECTURE AND PLUMBING DRAWINGS FOR PLUMBING FIXTURE AND TOILET ACCESSORY INFORMATION.
7. 3'-0" HIGH, FULL-WIDTH MIRROR. REFER TO ARCHITECTURE FOR TOILET ACCESSORIES SCHEDULE.
8. SHOWER CURTAIN & SHOWER CURTAIN HOOKS, EQ03. REFER TO FF&E PACKAGE. BOTTOM OF SHOWER CURTAIN TO HANG APPROX 1" ABOVE FINISHED FLOOR. COORDINATE SHOWER CURTAIN ROD INSTALLATION HEIGHT WITH COMBINED SHOWER CURTAIN & HOOK HEIGHT.

0 2' 4' 8' 12'
1/4" = 1'-0"

PLAN NORTH

SYM	DESCRIPTION	DATE	APPR

NAVFAC

COMMONWEALTH OF VIRGINIA
N.L. Miller
NATALIE LOYA MILLER
Cert. No. 0412001229
6/23/25
CERTIFIED INTERIOR DESIGNER
SEAL

Jacobs
1100 NORTH GLEBE ROAD
SUITE 500
ARLINGTON, VIRGINIA 22201
571.218.1000
FAX: 571.218.1600
A/E INFO

APPROVED
FOR COMMANDER NAVFAC 8/14/2025
ACTIVITY
APPROVED BY LCDR ELIZABETH
CLOKODE NAVFAC NLON FEAD
DIRECTOR NEW LONDON, GROTON, CT
SATISFACTORY TO DATE 05/27/2025

DES NM	DRW AW	CHK AB	
PM/DM	SMS/ CWJ		
BRANCH MANAGER	DJD		
CHIEF ENG/ARCH	JWJ		
FIRE PROTECTION	HPN		

DEPARTMENT OF THE NAVY
NAVAL FACILITIES ENGINEERING SYSTEMS COMMAND
MID-ATLANTIC
NAVAL FACILITIES ENGINEERING SYSTEMS COMMAND - MID-ATLANTIC
NAVAL STATION - NORFOLK, VA
NAVAL SUBMARINE BASE NEW LONDON
GROTON, CONNECTICUT
P-1102 WEAPONS MAGAZINE & ORDNANCE OPERATIONS FACILITY
OPERATIONS
INTERIOR ENLARGED PLANS & ELEVATIONS

SCALE: AS NOTED
EPROJECT NO.: 1667770
CONSTR. CONTR. NO.
NAVFAC DRAWING NO.
12893994
SHEET 44 OF 140
I-403

6/20/2025 10:30:26 AM I-403
\\bc1vs01\bdsp\PDZE1\9284\RCH\BLDG-1667770-A-BIM.rvt

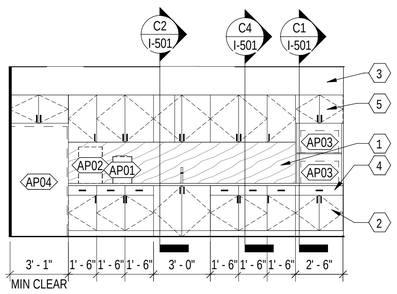

B1 COFFEE/MISC 106 WEST ELEVATION
1/4" = 1'-0" (I-404)

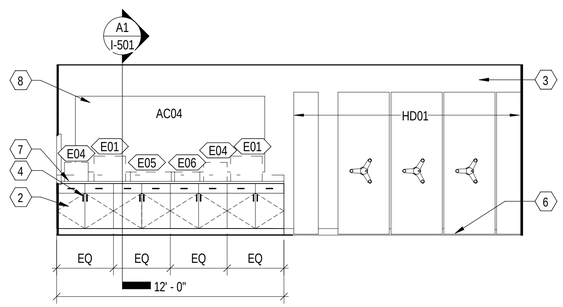

B2 SIPR OIS 107 EAST ELEVATION
1/4" = 1'-0" (I-404)

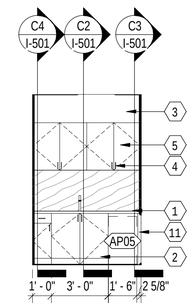

B3 LACTATION 118 SOUTH ELEVATION
1/4" = 1'-0" (A-401)

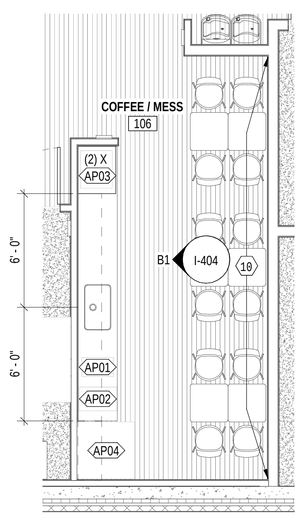

A1 COFFEE/MISC 106 ENLARGED PLAN
1/4" = 1'-0" (I-102)

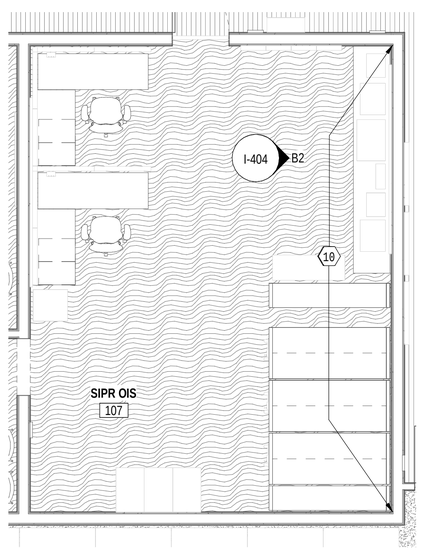

A2 SIPR OIS 107 ENLARGED PLAN
1/4" = 1'-0" (I-102)

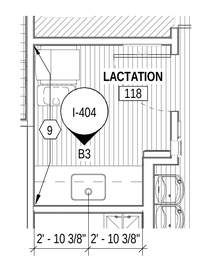

A3 LACTATION 118 ENLARGED PLAN
1/4" = 1'-0" (I-102)

GENERAL SHEET NOTES

A. REFER TO ARCHITECTURE (A) SHEETS FOR DOOR NUMBERS, ADDITIONAL DIMENSIONS, AND PARTITION TYPE DESIGNATIONS, IF NOT INDICATED ON ENLARGED PLAN.

B. REFER TO I-102 FOR INTERIORS FINISH PLAN & AND ROOM FINISH SCHEDULE.

C. REFER TO I-601 FOR INTERIOR MATERIAL FINISH SCHEDULE

D. REFER TO I-501 FOR INTERIORS MILLWORK DETAILS.

E. FF&E IS NOT IN CONTRACT AND SHOWN FOR COORDINATION ONLY. REFER TO I-101 FOR FF&E SCHEDULE. REFER TO FF&E PACKAGE SUBMITTED UNDER SEPARATE COVER FOR FF&E REQUIREMENTS.

F. REFER TO ARCHITECTURE (A) SHEET A-401 FOR TOILET / BATH ACCESSORIES (TBA) INFORMATION.

G. REFER TO AV (TA) PLAN AND ELEVATIONS AV EQUIPMENT TYPES AND LOCATIONS. COORDINATE AV FLATSCREEN MONITOR MOUNTING HEIGHT WITH ELECTRICAL AND DATA CONNECTIONS.

H. REFER TO PLUMBING (P) SHEETS FOR PLUMBING FIXTURES AND DETAILS.

I. FIELD VERIFY DIMENSIONS PRIOR TO ORDERING MATERIALS AND FINISHES.

J. WHERE WALL TILE IS PROVIDED, PROVIDE ANODIZED ALUMINUM TRIM PIECE AT OUTSIDE CORNERS.

SHEET KEYNOTES

1. SOLID SURFACE COUNTERTOP WITH FULL-HEIGHT BACKSPLASH TO UNDERSIDE OF CABINET ABOVE, SS-1.
2. PLASTIC LAMINATE, PL-1.
3. PAINT AS SCHEDULED.
4. 4" BAR PULL, BRUSHED STAINLESS STEEL FINISH.
5. PLASTIC LAMINATE, PL-2.
6. REFER TO STRUCTURAL DRAWINGS FOR HIGH DENSITY FILING SLAB DEPRESSION.
7. SOLID SURFACE COUNTERTOP WITH 4" HIGH BACKSPLASH, SS-1.
8. MOUNT MARKERBOARD ABOVE FURNITURE/MILLWORK.
9. ACCENT PAINT, PT-6.
10. ACCENT PAINT, PT-5.
11. PLASTIC LAMINATE FILLER STRIP, PL-1.

0 2' 4' 8' 12'
1/4" = 1'-0"

PLAN NORTH

SYM	DESCRIPTION	DATE	APPR

NAVFAC

COMMONWEALTH OF VIRGINIA
N.L. Miller
NATALIE LOYA MILLER
Cert. No. 0412001229
6/23/25
CERTIFIED INTERIOR DESIGNER
SEAL

Jacobs
1100 NORTH GLEBE ROAD
SUITE 500
ARLINGTON, VIRGINIA 22201
571.218.1000
FAX: 571.218.1600
A/E INFO

APPROVED
FOR COMMANDER NAVFAC 8/14/2025
ACTIVITY
APPROVED BY LCDR ELIZABETH OLOKODE NAVFAC NLON FEAD DIRECTOR NEW LONDON, GROTON, CT
SATISFACTORY TO DATE 05/27/2025

DES	NM	DRW	AW	CHK	AB
PM/DM	SMS/ CWJ				
BRANCH MANAGER	DJD				
CHIEF ENG/ARCH	JWJ				
FIRE PROTECTION	HPN				

DEPARTMENT OF THE NAVY
NAVAL FACILITIES ENGINEERING SYSTEMS COMMAND - MID-ATLANTIC
NAVAL FACILITIES ENGINEERING SYSTEMS COMMAND
MID-ATLANTIC
NAVAL STATION - NORFOLK, VA
NAVAL SUBMARINE BASE NEW LONDON
GROTON, CONNECTICUT
P-1102 WEAPONS MAGAZINE & ORDNANCE OPERATIONS FACILITY
OPERATIONS
INTERIOR ENLARGED PLANS & ELEVATIONS

SCALE: AS NOTED
EPROJECT NO.: 1667770
CONSTR. CONTR. NO.
NAVFAC DRAWING NO.
12893995
SHEET 45 OF 140
I-404

6/20/2025 10:36:31 AM I-404
\\bk-1vs01\bldg\PROJEK\6284\ARCH\BLDG-1667770-A-BIM.rvt

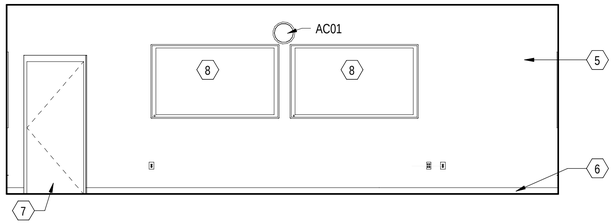

D1 TRAINING/CONFERENCE 131 NORTH ELEVATION
1/4" = 1'-0" (I-405)

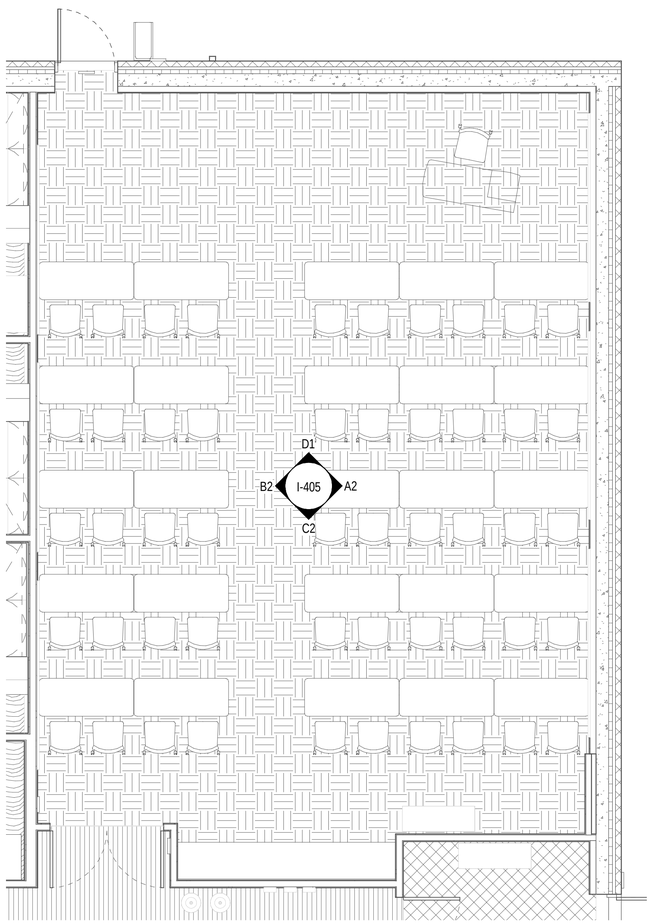

A1 TRAINING/CONFERENCE 131 ENLARGED PLAN
1/4" = 1'-0" (I-102)

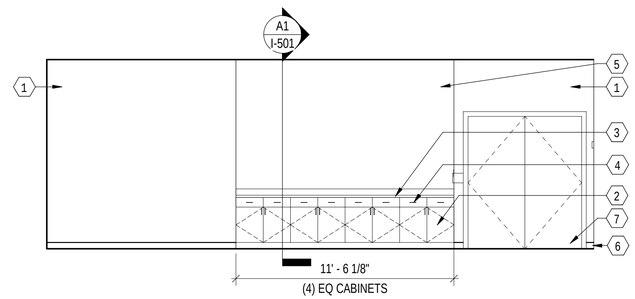

C2 TRAINING/CONFERENCE 131 SOUTH ELEVATION
1/4" = 1'-0" (I-405)

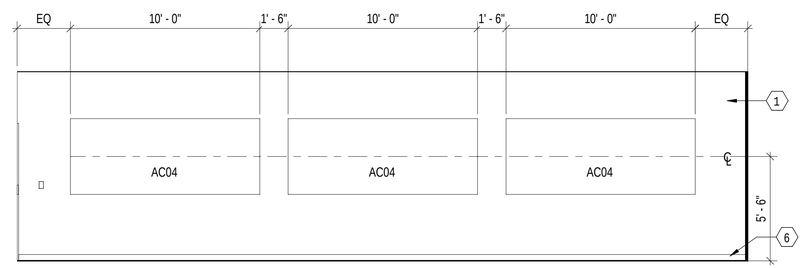

B2 TRAINING/CONFERENCE 131 WEST ELEVATION
1/4" = 1'-0" (I-405)

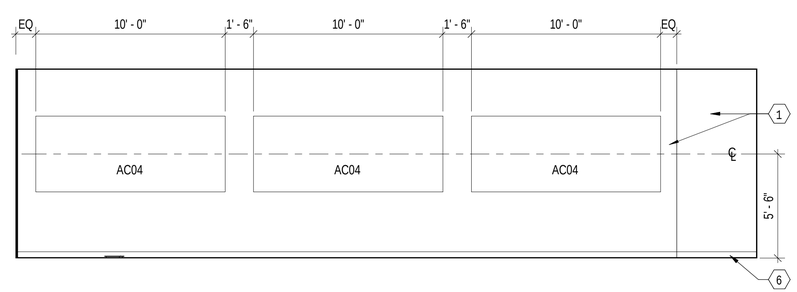

A2 TRAINING/CONFERENCE 131 EAST ELEVATION
1/4" = 1'-0" (I-405)

GENERAL SHEET NOTES

A. REFER TO ARCHITECTURE (A) SHEETS FOR DOOR NUMBERS, ADDITIONAL DIMENSIONS, AND PARTITION TYPE DESIGNATIONS, IF NOT INDICATED ON ENLARGED PLAN.

B. REFER TO I-102 FOR INTERIORS FINISH PLAN & AND ROOM FINISH SCHEDULE.

C. REFER TO I-601 FOR INTERIOR MATERIAL FINISH SCHEDULE

D. REFER TO I-501 FOR INTERIORS MILLWORK DETAILS.

E. FF&E IS NOT IN CONTRACT AND SHOWN FOR COORDINATION ONLY. REFER TO I-101 FOR FF&E SCHEDULE. REFER TO FF&E PACKAGE SUBMITTED UNDER SEPARATE COVER FOR FF&E REQUIREMENTS.

F. REFER TO ARCHITECTURE (A) SHEET A-401 FOR TOILET / BATH ACCESSORIES (TBA) INFORMATION.

G. REFER TO AV (TA) PLAN AND ELEVATIONS AV EQUIPMENT TYPES AND LOCATIONS. COORDINATE AV FLATSCREEN MONITOR MOUNTING HEIGHT WITH ELECTRICAL AND DATA CONNECTIONS.

H. REFER TO PLUMBING (P) SHEETS FOR PLUMBING FIXTURES AND DETAILS.

I. FIELD VERIFY DIMENSIONS PRIOR TO ORDERING MATERIALS AND FINISHES.

J. WHERE WALL TILE IS PROVIDED, PROVIDE ANODIZED ALUMINUM TRIM PIECE AT OUTSIDE CORNERS.

SHEET KEYNOTES

1 PAINT AS SCHEDULED.
2 PLASTIC LAMINATE, PL-1.
3 SOLID SURFACE COUNTERTOP WITH 4" HIGH BACKSPLASH, SS-1.
4 4" BAR PULL, BRUSHED STAINLESS STEEL FINISH.
5 ACCENT PAINT, PT-6.
6 RESILIENT WALL BASE AS SCHEDULED.
7 PAINT DOOR AND TRIM, PT-3 AS SCHEDULED.
8 AUDIO VISUAL EQUIPMENT; REFER TO AV PLAN AND ELEVATIONS OR AV EQUIPMENT TYPES, LOCATIONS AND MOUNTING HEIGHTS.

0 2' 4' 8' 12'
1/4" = 1'-0"

PLAN NORTH

SYM	DESCRIPTION	DATE	APPR

NAVFAC

COMMONWEALTH OF VIRGINIA
N.L. Miller
NATALIE LOYA MILLER
Cert. No. 0412001229
6/25/25
CERTIFIED INTERIOR DESIGNER
SEAL

Jacobs
1100 NORTH GLEBE ROAD
SUITE 500
ARLINGTON, VIRGINIA 22201
571.218.1000
FAX: 571.218.1600
A/E INFO

APPROVED
FOR COMMANDER NAVFAC 8/14/2025

ACTIVITY:
APPROVED BY LCDR ELIZABETH OLOKODE NAVFAC NLON FEAD DIRECTOR NEW LONDON, GROTON, CT

SATISFACTORY TO DATE			05/27/2025
DES	NM	DRW AW	CHK AB
PM/DM			SMS/ CWJ
BRANCH MANAGER			DJD
CHIEF ENG/ARCH			JWJ
FIRE PROTECTION			HPN

DEPARTMENT OF THE NAVY
NAVAL FACILITIES ENGINEERING SYSTEMS COMMAND
MID-ATLANTIC
NAVAL FACILITIES ENGINEERING SYSTEMS COMMAND - MID-ATLANTIC
NAVAL STATION - NORFOLK, VA
NAVAL SUBMARINE BASE NEW LONDON
GROTON, CONNECTICUT
P-1102 WEAPONS MAGAZINE & ORDNANCE OPERATIONS FACILITY
OPERATIONS
INTERIOR ENLARGED PLANS & ELEVATIONS

SCALE: AS NOTED
EPROJECT NO.: 1667770
CONSTR. CONTR. NO.
NAVFAC DRAWING NO. 12893996
SHEET 46 OF 140
I-405

6/20/2025 10:30:37 AM I-405
\\dc1-vs01\Hdqt\FDZE\E829\ARCH\BLDG-1667770-A-BIM.rvt

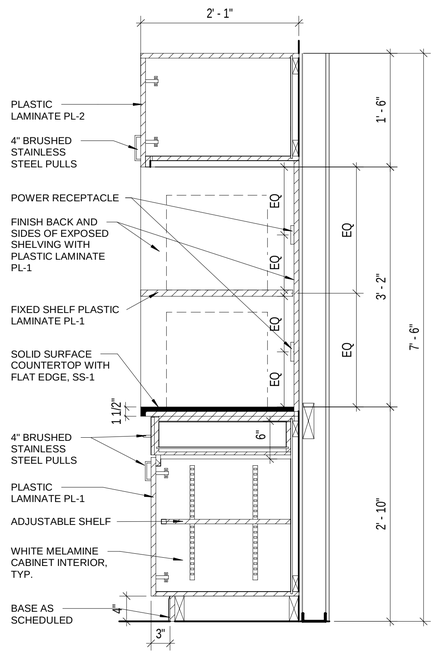

C1 MILLWORK SECTION - MICROWAVE TOWER
1" = 1'-0"

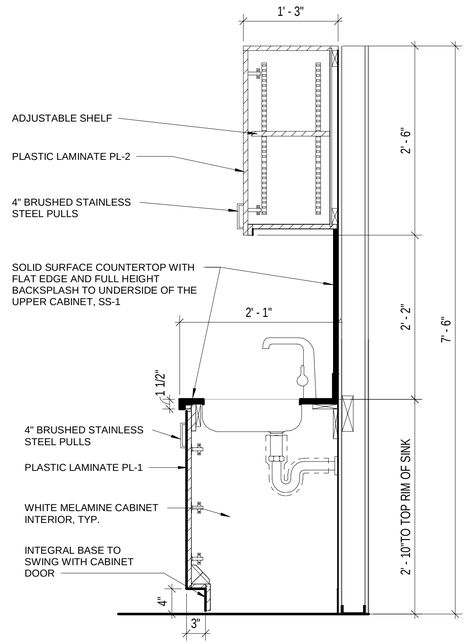

C2 MILLWORK SECTION - CABINET AT SINK
1" = 1'-0"

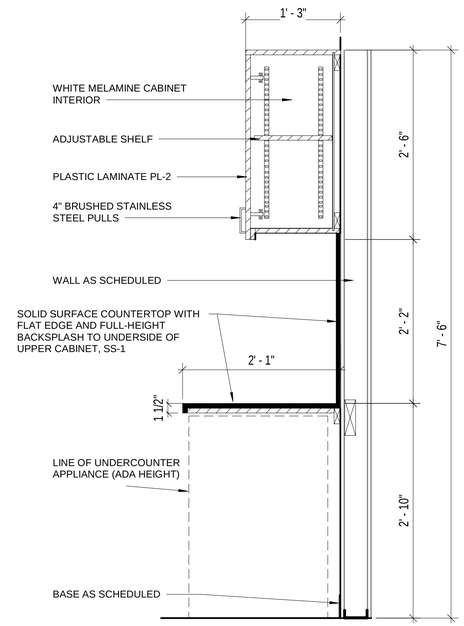

C3 MILLWORK SECTION - UNDERCOUNTER APPLIANCE
1" = 1'-0"

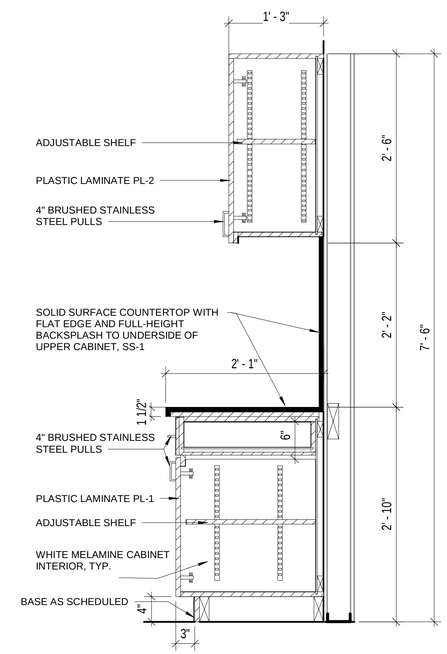

C4 MILLWORK SECTION - UPPER & BASE CABINET
1" = 1'-0"

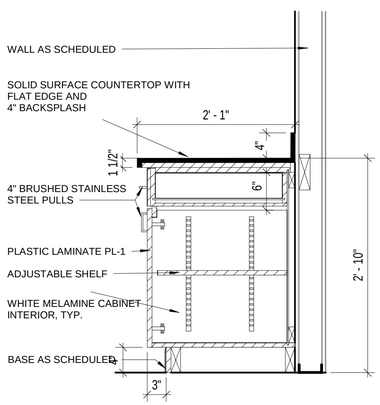

A1 MILLWORK SECTION - BASE CABINET
1" = 1'-0"

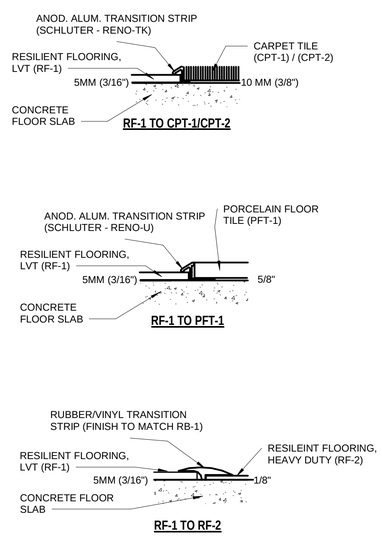

A2 FLOORING TRANSITION DETAILS
6" = 1'-0"

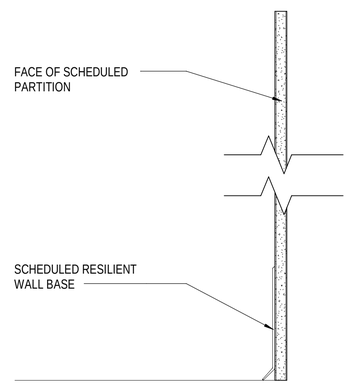

A3 RESILIENT WALL BASE DETAIL
3" = 1'-0"

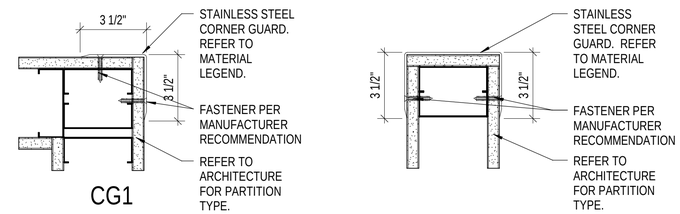

B4 CORNER GUARDS DETAIL
3" = 1'-0"

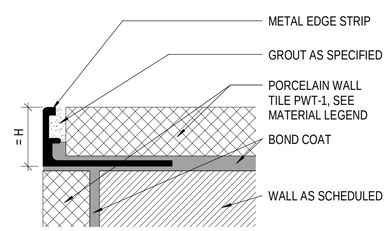

H = COORDINATE WITH SPECIFIED WALL TILE

A4 METAL EDGE STRIP DETAIL
12" = 1'-0"

0 6" 1' 2' 3'
1" = 1'-0"

0 1" 2" 4" 6"
6" = 1'-0"

SYM	DESCRIPTION	DATE	APPR

NAVFAC

COMMONWEALTH OF VIRGINIA
N.L. Miller
NATALIE LOYA MILLER
Cert. No. 0412001229
6/23/25
CERTIFIED INTERIOR DESIGNER
SEAL

Jacobs
1100 NORTH GLEBE ROAD
SUITE 500
ARLINGTON, VIRGINIA 22201
571.218.1000
FAX: 571.218.1600

A/E INFO

APPROVED
FOR COMMANDER NAVFAC 8/14/2025

ACTIVITY
APPROVED BY LCDR ELIZABETH OLOKODE NAVFAC NLON FEAD DIRECTOR NEW LONDON, GROTON, CT

SATISFACTORY TO DATE 05/27/2025

DES	NM	DRW	AW	CHK	AB
PM/DM	SMS/ CWJ				
BRANCH MANAGER	DJD				
CHIEF ENG/ARCH	JWJ				
FIRE PROTECTION	HPN				

DEPARTMENT OF THE NAVY
NAVAL FACILITIES ENGINEERING SYSTEMS COMMAND - MID-ATLANTIC
MID-ATLANTIC
NAVAL FACILITIES ENGINEERING SYSTEMS COMMAND
NAVAL STATION - NORFOLK, VA
NAVAL SUBMARINE BASE NEW LONDON
GROTON, CONNECTICUT
P-1102 WEAPONS MAGAZINE & ORDNANCE OPERATIONS FACILITY
OPERATIONS
INTERIOR DETAILS

SCALE: AS NOTED
EPROJECT NO.: 1667770
CONSTR. CONTR. NO.
NAVFAC DRAWING NO. 12893997
SHEET 47 OF 140

I-501

6/20/2025 10:30:39 AM I-501
\\ad.jacobs.com\ds\Projects\PDCE\B28\ARCH\BLDG-1667770-A-BIM.rvt

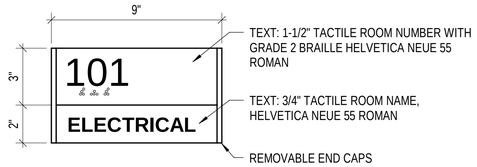

S1 UTILITY SIGN

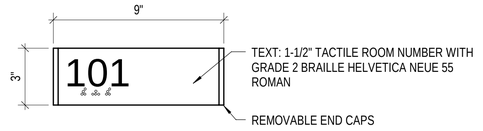

S2 EXTERIOR PERMANENT ROOM

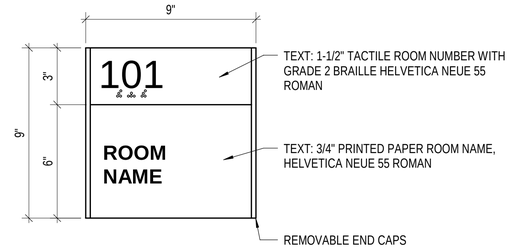

S3 PERMANENT ROOM ID SIGN

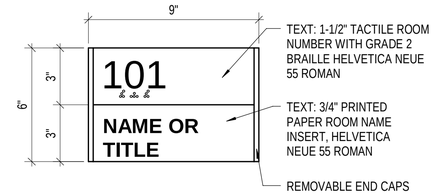

S4 WORK STATION SIGN

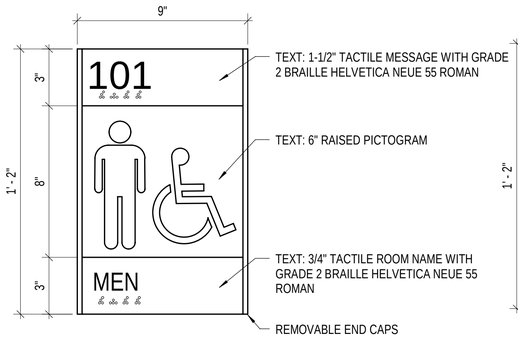

S5M MEN'S RESTROOM ID

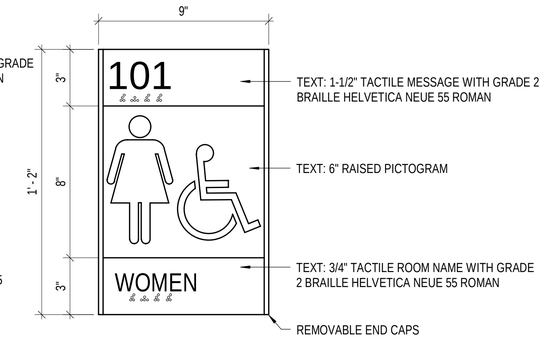

S5W WOMEN'S RESTROOM ID

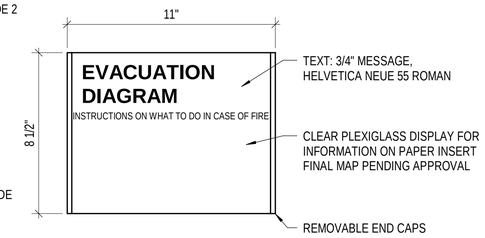

S6 EVACUATION SIGN ID

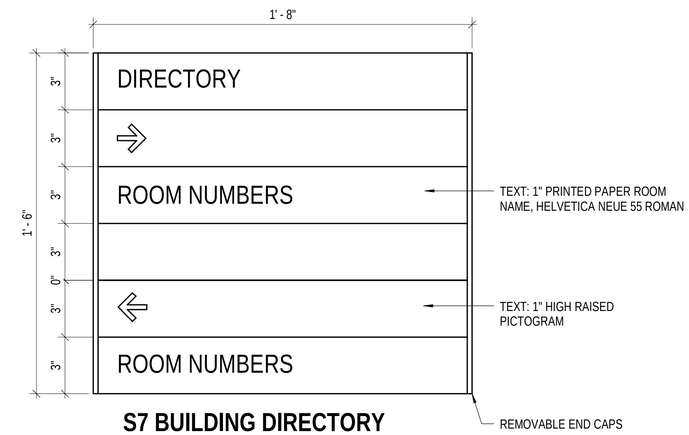

S7 BUILDING DIRECTORY

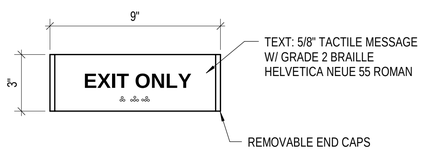

S8 TACTILE EXIT

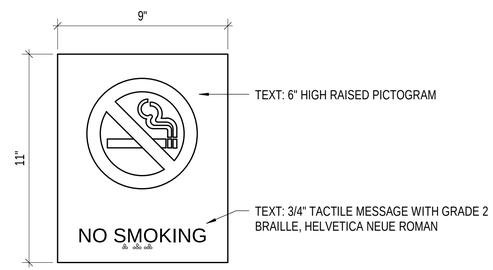

S9 REGULATORY SIGN

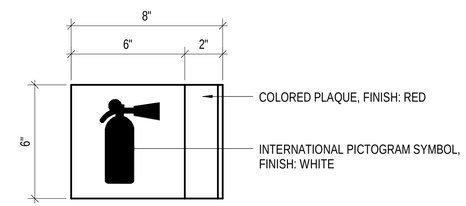

PROVIDE AT EACH FIRE EXTINGUISHER CABINET. REFER TO ARCHITECTURE AND FIRE PROTECTION DRAWINGS FOR LOCATIONS.

S10 FIRE EXTINGUISHER SIGN

B1 SIGN TYPE DETAILS

3" = 1'-0"

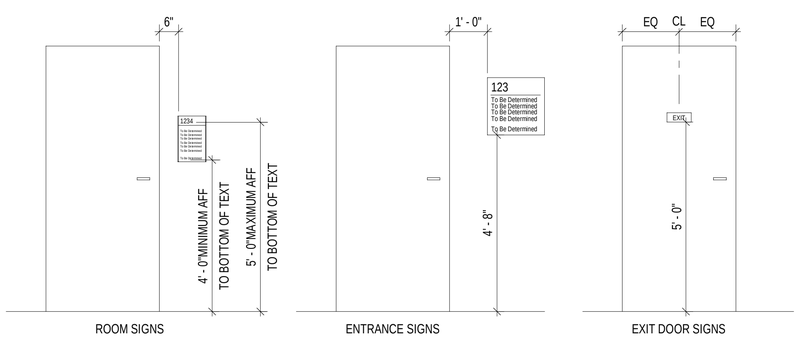

NOTES:

1. MOUNTING OPTIONS VARY PER SIGN TYPE.
2. WHERE THERE IS LESS THAN 18" CLEAR SPACE ON THE LATCH SIDE OF A SINGLE DOOR, OR ON THE RIGHT SIDE OF DOUBLE DOORS, SIGNS ARE LOCATED TO THE NEAREST ADJACENT WALL.
3. WHERE THERE IS A SIDE LIGHT WINDOW LOCATED ADJACENT TO THE DOOR, MOUNT THE SIGN TO THE GLASS AND PROVIDE A BACKER PLATE OF THE SAME SHAPE AND BACKGROUND COLORS AS THE SIGN ON THE GLASS TO CONCEAL MOUNTING DEVICE.
4. ATTACH SIGNAGE WITH REMOVABLE DOUBLE SIDED TAPE PRIOR TO PERMANENT INSTALLATION. COR TO REVIEW AND PROVIDE APPROVAL PRIOR TO PERMANENT INSTALLATION.

A1 SIGNAGE DOORWAY LOCATIONS

1/2" = 1'-0"

0 1' 2' 4' 6'
1/2" = 1'-0"

0 3" 6" 1'
3" = 1'-0"

SYM	DESCRIPTION	DATE	APPR

NAVFAC

COMMONWEALTH OF VIRGINIA
N.L. Miller
NATALIE LOYA MILLER
Cert. No. 0412001229
6/23/25
CERTIFIED INTERIOR DESIGNER
SEAL

Jacobs
1100 NORTH GLEBE ROAD
SUITE 500
ARLINGTON, VIRGINIA 22201
571.218.1000
FAX: 571.218.1600

A/E INFO

APPROVED
FOR COMMANDER NAVFAC 8/14/2025

ACTIVITY
APPROVED BY LCDR ELIZABETH OLOKODE NAVFAC NLON FEAD DIRECTOR NEW LONDON, GROTON, CT

SATISFACTORY TO DATE	05/27/2025
DES PS	DRW PS / CHK WS
PM/DM	SMS/ CWJ
BRANCH MANAGER	DJD
CHIEF ENG/ARCH	JWJ
FIRE PROTECTION	HPN

DEPARTMENT OF THE NAVY
NAVAL FACILITIES ENGINEERING SYSTEMS COMMAND
MID-ATLANTIC
NAVAL FACILITIES ENGINEERING SYSTEMS COMMAND - MID-ATLANTIC
NAVAL STATION - NORFOLK, VA
NAVAL SUBMARINE BASE NEW LONDON
GROTON, CONNECTICUT
P-1102 WEAPONS MAGAZINE & ORDNANCE OPERATIONS FACILITY
OPERATIONS
SIGNAGE DETAILS

SCALE:	AS NOTED
EPROJECT NO.:	1667770
CONSTR. CONTR. NO.	
NAVFAC DRAWING NO.	12893998
SHEET	48 OF 140

I-502

6/20/2025 10:30:41 AM I-502
\\ad.ly\v01\fedqn\PDZE1628\ARCHBLDG-1667770-A-BIM.rvt

INTERIOR MATERIALS FINISH SCHEDULE

ITEM CODE	SURFACE	MATERIAL	MANUFACTURER	MODEL/STYLE	COLOR/FINISH	SIZE	COMMENTS
ACP-1	CEILING	ACOUSTIC CEILING PANEL, GENERAL	ARMSTRONG	CALLA, SQUARE TEGULAR	WHITE WH	24" X 24" X 15/16"	GENERAL USE
ACP-2	CEILING	ACOUSTIC CEILING PANEL, CONFERENCE	ARMSTRONG	CALLA HIGH NRC, SQUARE TEGULAR	WHITE WH	24" X 24" X 15/16"	TRAINING / CONFERENCE
ACP-3	CEILING	ACOUSTIC CEILING PANEL, WATER RESISTANT	ARMSTRONG	CERAMAGUARD FINE FISSURED, SQUARE LAY-IN	WHITE WH	24" X 24" X 15/16"	LOCKER ROOMS & WASHER/DRYER
EXP	CEILING	EXPOSED TO STRUCTURE	-	-	-	-	
GYP	CEILING	GYPSUM BOARD	-	-	-	-	
PT-2	CEILING	PAINT, CEILING	SHERWIN WILLIAMS	FLAT FINISH	SW7007 CEILING BRIGHT WHITE	-	PAINT AS SPECIFIED ON ROOM FINISH SCHEDULE
CPT-1	FLOORING	MODULAR CARPET TILE, GENERAL	MILLIKEN	REVELATION/ PATHWAY	FOUNTAIN	19.7" x 39.4"	10.4 MM (0.41") THICKNESS, MONOLITHIC INSTALLATION
CPT-2	FLOORING	MODULAR CARPET TILE, CONFERENCE	MILLIKEN	REVELATION/ PATHWAY	FIELD	19.7" x 39.4"	10.4 MM (0.41") THICKNESS, MONOLITHIC INSTALLATION
CPT-3	FLOORING	MODULAR CARPET TILE, WALK OFF MAT	MATS INC	CALYPSO TILE	ANTHRACITE	19-11/16" x 19-11/16"	3/8" THICKNESS, MONOLITHIC INSTALLATION
PFT-1	FLOORING	PORCELAIN FLOOR TILE	DALTILE	FAMED	ICONIC FM11 MATTE	12" X 24"	5/8" THICKNESS, RESTROOM & LOCKER ROOM
RF-1	FLOORING	RESILIENT FLOORING, LVT	MILLIKEN	LUMENOLOGY, LIGHT WASH	SHADE	9.84" x 39.37"	5.00 MM (0.197") THICKNESS, ASHLAR INSTALLATION
RF-2	FLOORING	RESILIENT FLOORING, HEAVY DUTY	AMERICAN BILTRITE	TEXAS GRANITE VINYL TILE	GREY 137	24" X 24"	1/8" THICKNESS
SC-1	FLOORING	SEALED CONCRETE	-	-	-	-	GENERAL USE, REFER TO SPECIFICATION
PL-1	MILLWORK	PLASTIC LAMINATE	FORMICA	5792	INKED OAK	-	BASE CABINETS
PL-2	MILLWORK	PLASTIC LAMINATE	NEVAMAR	HLT004	SILVER HAUTELINK	-	UPPER CABINETS
SS-1	MILLWORK	SOLID SURFACE COUNTERTOP	WILSONART	9236SS	BEIGE TRAVERTINE	-	COUNTERTOPS AND BACKSPLASH
CG-1	MISCELLANEOUS	CORNER GUARD, STAINLESS STEEL	CS ACROVYN	CO-8	STAINLESS STEEL, SATIN FINISH #4	3-1/2" LEGS	INSTALL CORNER GUARD CG-1 AT ALL OUTSIDE GYPSUM BOARD CORNERS. DO NOT INSTALL ON CMU. INSTALL CORNER GUARD CG-1 AT ALL OUTSIDE GYPSUM BOARD CORNERS. DO NOT INSTALL ON CMU. INSTALL CORNER GUARD CG-1 AT ALL OUTSIDE GYPSUM BOARD CORNERS. DO NOT INSTALL ON CMU.
GT-1	MISCELLANEOUS	EPOXY GROUT	MAPEI	EPOXY GROUT	WARM GRAY 93	-	
LK-01	MISCELLANEOUS	Z LOCKER, HDPE, 2-TIER	BRADLEY CORP	LENOX Z-LOCKER	CHARCOAL GRAY S215	18"W X 24"D X72"H	LOCKERS / BUNKS
LK-02	MISCELLANEOUS	PERSONAL DEVICE CELL PHONE LOCKERS, 15 UNITS	SALSBURY	SURFACE MOUNTED CELL PHONE LOCKER WITH FULL HEIGHT ENCLOSURE	ALUMINUM	24"W X 9.25"D X 61"H	
TBA-02	MISCELLANEOUS	TOILET PARTITIONS	BRADLEY CORP	BRADMAR HDPE PARTITIONS	CHARCOAL GRAY S215	-	FLOOR MOUNTED TOLIET PARTITIONS, REFER TO SHEET A-401 FOR PLAN AND TOLIET/BATH ACCESSORY SCHEDULE.
WB-1	MISCELLANEOUS	WINDOW BLINDS	SWF CONTRACT	CLASSICS 1" MINI BLINDS	TRUE WHITE 544	1" SLATS	SENTRY BUILDING WINDOW TREATMENTS.
MCB-1	WALL BASE	METAL COVE BASE	SCHLUTER	DILEX-AHK	SATIN ANODIZED ALUMINUM	5/16"	RESTROOM
PTB-1	WALL BASE	PORCELAIN TILE BASE	DALTILE	FAMED/ COVE	ICONIC FM11 MATTE	3" x 24"	LOCKER ROOMS
RB-1	WALL BASE	RESILIENT WALL BASE	ROPPE	PINNACLE RUBBER BASE	CHARCOAL GRAY 123	4" H	GENERAL USE (STRAIGHT PROFILE AT CARPET; STANDARD TOE AT HARD FLOORING)
EXP	WALLS	EXPOSED TO STRUCTURE	-	-	-	-	
PT-1	WALLS	PAINT, FIELD	SHERWIN WILLIAMS	SATIN FINISH	SW7006 EXTRA WHITE	-	GENERAL USE
PT-3	WALLS	PAINT, DOORS & FRAME	SHERWIN WILLIAMS	SEMI GLOSS FINISH	SW7068 GRIZZLE GRAY	-	INTERIOR METAL DOORS AND TRIM
PT-4	WALLS	PAINT, FIELD	SHERWIN WILLIAMS	SATIN FINISH	SW7015 REPOSE GRAY	-	CONFERENCE ROOM, BUNKS & SENTRY BUILDING
PT-5	WALLS	PAINT, ACCENT	SHERWIN WILLIAMS	SATIN FINISH	SW9141 WATERLOO	-	ACCENT WALLS
PT-6	WALLS	PAINT, ACCENT	SHERWIN WILLIAMS	SATIN FINISH	SW9128 GREEN ONYX	-	ACCENT WALLS
PT-7	WALLS	EPOXY PAINT	SHERWIN WILLIAMS		SW7006 EXTRA WHITE	-	
PWT-1	WALLS	PORCELAIN WALL TILE	DALTILE	FAMED/ RECTANGLE	ICONIC FM11 MATTE	12" X 24"	RESTROOM
PWT-2	WALLS	PORCELAIN WALL TILE- MOSAIC	DALTILE	FAMED/ CHEVRON	ICONIC FM11 MATTE	3" X 6"	RESTROOM

GENERAL SHEET NOTES

A. REFER TO OPERATIONS BUILDING SHEET I-102 FOR OPERATIONS BUILDING INTERIORS FINISH PLAN & ROOM FINISH SCHEDULE.

B. REFER TO SENTRY BUILDING SHEET I-102 FOR SENTRY BUILDING INTERIORS FINISH PLAN & ROOM FINISH SCHEDULE.

C. FOR QUESTIONS REGARDING INTERIOR DESIGN DRAWINGS AND SPECIFICATIONS CONTACT: NAVFAC OFFICE IN CHARGE OF CONSTRUCTION (OICC).

D. FINISHES INDICATED ARE THE APPROVED BASIS OF DESIGN TO CONVEY COLOR, PATTERN, TEXTURE AND SALIENT CHARACTERISTICS ONLY. THE LISTING OF MANUFACTURER INFORMATION IS NOT INTENDED TO LIMIT THE SELECTION OF PRODUCTS PROVIDED BY OTHER MANUFACTURERS. PRODUCTS MEETING THESE CRITERIA WILL BE CONSIDERED AND MUST BE REVIEWED BY THE INTERIOR DESIGNER OF RECORD (IDOR) AND THE NAVFAC INTERIOR DESIGNER AND APPROVED BY THE CONTRACTING OFFICER.

E. FINISH ITEMS ARE NOT SUBSTITUTED DUE TO ORDERING LEAD TIMES. IT IS THE CONTRACTOR'S RESPONSIBILITY TO ORDER MATERIALS IN TIME TO AVOID DELAYS.

F. SPRAY PAINT ELECTRICAL PANEL, ACCESS PANELS, AND EXPANSION JOINTS TO MATCH THE ADJACENT WALL COLOR. PANELS PAINTED BY BRUSH ARE NOT ACCEPTABLE.

G. TRANSITIONS MUST MEET ABA GUIDELINES.

H. TRANSITIONS ARE TO OCCUR AT THE CENTERLINE OF THE DOOR, DOORWAY OR CEILING LINE, UNLESS OTHERWISE NOTED.

I. ROOMS IDENTIFIED TO RECEIVE TILE ON WALLS: FLOOR MUST INCLUDE METAL TRANSITIONS ON OUTSIDE AND INSIDE CORNERS AS WELL AS THE INTERSECTION BETWEEN THE FLOOR AND WALL TILE FOR A COMPLETE INSTALLATION.

J. PROVIDE CORNER GUARDS (CG-1) ON OUTSIDE CORNERS. CORNER GUARDS SHOULD NOT BE PROVIDED ON CMU WALLS OR MANUFACTURED STONE WALLS.

K. ALIGN PORCELAIN WALL AND FLOOR TILE. TILE IS CENTERED ON EACH WALL.

SYM	DESCRIPTION	DATE	APPR

NAVFAC

COMMONWEALTH OF VIRGINIA
N.L. Miller
NATALIE LOYA MILLER
Cert. No. 0412001229
6/23/25
CERTIFIED INTERIOR DESIGNER
SEAL

Jacobs
1100 NORTH GLEBE ROAD
SUITE 500
ARLINGTON, VIRGINIA 22201
571.218.1000
FAX: 571.218.1600

A/E INFO

APPROVED
FOR COMMANDER NAVFAC 8/14/2025

ACTIVITY
APPROVED BY LCDR ELIZABETH OLOKODE NAVFAC NLON FEAD DIRECTOR NEW LONDON, GROTON, CT

SATISFACTORY TO DATE 05/27/2025

DES	NM	DRW	AW	CHK	AB

PM/DM	SMS/ CWJ
BRANCH MANAGER	DJD
CHIEF ENG/ARCH	JWJ
FIRE PROTECTION	HPN

DEPARTMENT OF THE NAVY
NAVAL FACILITIES ENGINEERING SYSTEMS COMMAND
NAVAL FACILITIES ENGINEERING SYSTEMS COMMAND - MID-ATLANTIC
MID-ATLANTIC
NAVAL STATION - NORFOLK, VA
NAVAL SUBMARINE BASE NEW LONDON
GROTON, CONNECTICUT
P-1102 WEAPONS MAGAZINE & ORDNANCE OPERATIONS FACILITY
OPERATIONS
INTERIOR MATERIALS FINISH SCHEDULE

SCALE: AS NOTED
EPROJECT NO.: 1667770
CONSTR. CONTR. NO.
NAVFAC DRAWING NO. 12893999
SHEET 49 OF 140

I-601

6/20/2025 10:30:44 AM I-601
\\ad.jacobs.com\ds\projects\P262\E028\ARC\HBLDG-1667770-A-BIM.rvt