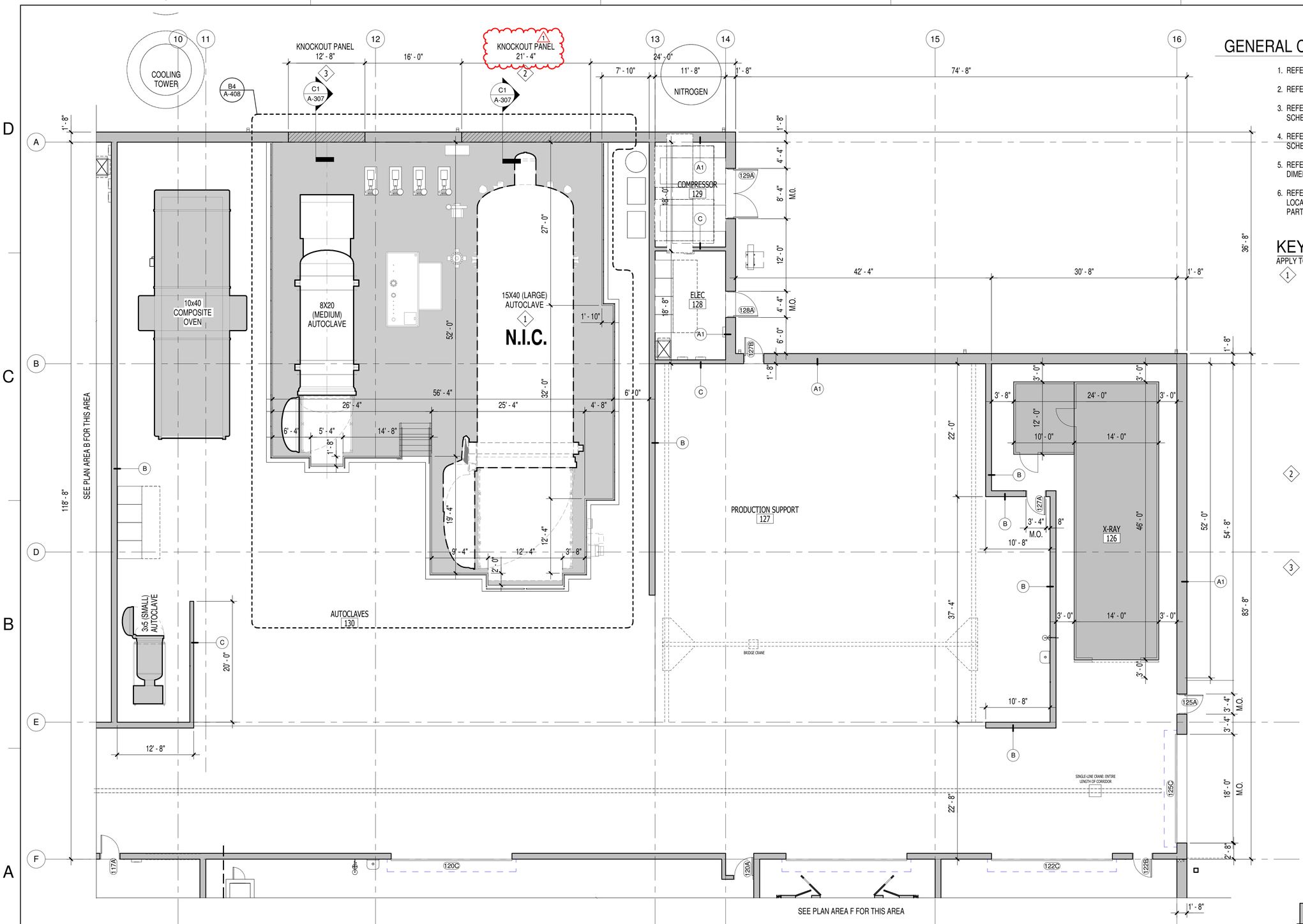


A1 FLOOR PLAN - AREA C

SCALE: 1/8" = 1'-0"

GRAPHIC SCALE: 1/8"=1'-0"

8' 0 4' 8' 16'

## GENERAL CONSTRUCTION NOTES

1. REFERENCE SHEET A-001 FOR SYMBOL LEGEND.
2. REFERENCE SHEET(S) A-501 & A-502 FOR WALL TYPES.
3. REFERENCE SHEET A-601 FOR DOOR AND FRAME SCHEDULE.
4. REFERENCE INTERIOR DRAWING SET FOR FINISH SCHEDULE.
5. REFERENCE INTERIOR DRAWING SET FOR CASEWORK DIMENSIONS AND DETAILS.
6. REFERENCE THE LIFE SAFETY DRAWINGS FOR LOCATIONS OF RATED WALLS AND SMOKE PARTITIONS.

## KEYED NOTES

APPLY TO THIS SHEET ONLY

1. NOTE: LARGE AUTOCLAVE AS SHOWN IN PLAN IS NOT IN CONTRACT. BUILT PREPARATIONS TO ACCOMMODATE IT'S EVENTUAL PURCHASE AND INSTALLATION/DELIVERY (AT AN UNDETERMINED DATE, OUTSIDE OF THIS CONTRACT) IN THE BASE BID INCLUDE THE AUTOCLAVE PIT AS SHOWN AND KNOCKOUT EXTERIOR WALL PANEL RELATIVE TO IT'S EVENTUAL LOCATION.

   SEE ELECTRICAL, PLUMBING AND MECHANICAL DRAWING SETS FOR INFORMATION RELATED TO BASIC ENGINEERING INFRASTRUCTURE INCLUDED IN THIS CONTRACT.

   NOTE THAT THE ADJACENT MEDIUM AUTOCLAVE IS IN THE CONTRACT AND INCLUDES DESCRIBED INFRASTRUCTURE TO SUPPORT IT'S OPERATION, ALSO AS DESCRIBED IN THE SPECIFICATON.

2. KNOCKOUT WALL PANEL "A" (LARGE AUTOCLAVE): SEE SHEET A-307 FOR FURTHER DETAIL AND DESCRIPTION INCLUDING STRUCTURAL DRAWINGS FOR LINTEL DESCRIPTION AT OPENING. NOTE THAT THE LARGE AUTOCLAVE IS NOT IN CONTRACT- THEREFORE SCOPE OF WORK IS TO BUILD THE KNOCKOUT PANEL AS DESCRIBED ON SHEET A-307 AS 'FINISHED WALL CONDITION'.

3. KNOCKOUT WALL PANEL "B" (MEDIUM AUTOCLAVE): SEE SHEET A-307 FOR FURTHER DETAIL AND DESCRIPTION INCLUDING STRUCTURAL DRAWINGS FOR LINTEL DESCRIPTION AT OPENING. NOTE THAT THE MEDIUM AUTOCLAVE IS IN CONTRACT- THEREFORE SCOPE OF WORK IS TO BUILD THE KNOCKOUT PANEL AS DESCRIBED ON SHEET A-307 AS 'TEMPORARY INFILL WALL CONDITION' PRIOR TO AUTOCLAVE DELIVERY; UPON DELIVERY, DEMOLISH INFILL TO ACCOMMODATE DELIVERY/INSTALLATION; SUBSEQUENT TO DELIVERY/INSTALLATION, REBUILD PANEL AS DESCRIBED ON SHEET A-307 AS 'FINISHED WALL CONDITION'.

KEY PLAN

NOT TO SCALE

| SYM | Amendment | DESCRIPTION | DATE | APPR |
|---|---|---|---|---|
| 1 | | | 2026.04.07 | |

NAVFAC

DARDEN J. EURE III REGISTERED ARCHITECT 8840 NORTH CAROLINA NEW BERN NC

24 DECEMBER 2025 SEAL

mbf architects pa

317-C Pollock Street | New Bern, NC 28560
252.637.6373 | mbfarchitects.com

A/E INFO

APPROVED

FOR COMMANDER NAVFAC 4/22/2026

ACTIVITY

Approved by Erik A. Lewis, Infrastructure Engineering Branch Head, FRCE Cherry Point via Electronic Signature

SATISFACTORY TO 12/24/2025

| | | | |
|---|---|---|---|
| DES | DLG | DRW | DLG |
| CHK | DJE | | |
| PM/DM | KTB/SOM | | |
| BRANCH MANAGER | CGM | | |
| CHIEF ENG/ARCH | JWJ | | |
| FIRE PROTECTION | HPN | | |

DEPARTMENT OF THE NAVY
NAVAL FACILITIES ENGINEERING SYSTEMS COMMAND
DESIGN AND CONSTRUCTION (DC) CORE
MARINE CORPS AIR STATION

NAVAL FACILITIES ENGINEERING SYSTEMS COMMAND ~ MIDATLANTIC
NAVAL STATION - NORFOLK, VA
CHERRY POINT, NC

P-995 COMPOSITE REPAIR FACILITY

FLOOR PLAN - AREA C

SCALE: AS INDICATED

EPROJECT NO.: 1692230

STA. PROJ. NO.:

NAVFAC DRAWING NO.
12938262

SHEET 114 OF 456

A-104

DRAWFORM REVISION: 25 AUGUST 2020

MBF ARCHITECTS P.A. REGISTERED ARCHITECTURAL CORPORATION CERT. NO. 50679 NORTH CAROLINA NEW BERN N.C.

File C:\Users\griffith\Documents\2136 ARCH_2023_griffith@mbfarchitects.com.rvt
Print 4/14/2026 11:16:40 AM

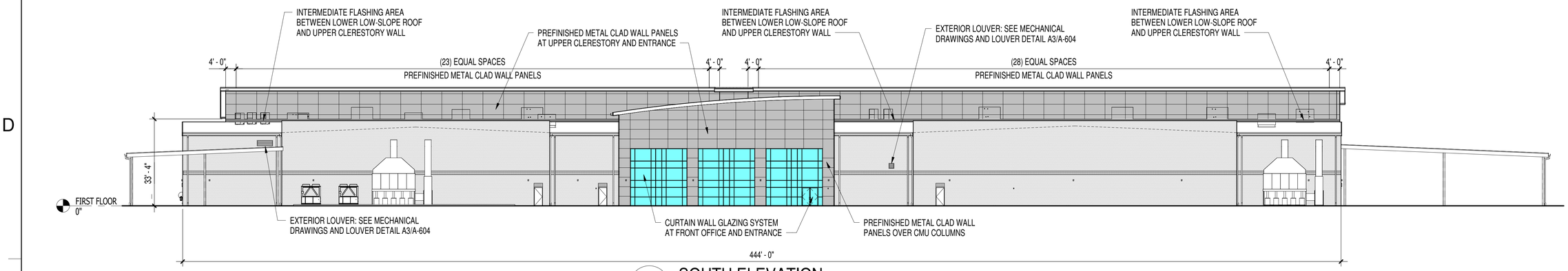


## D1 SOUTH ELEVATION

SCALE: 1" = 20'-0"

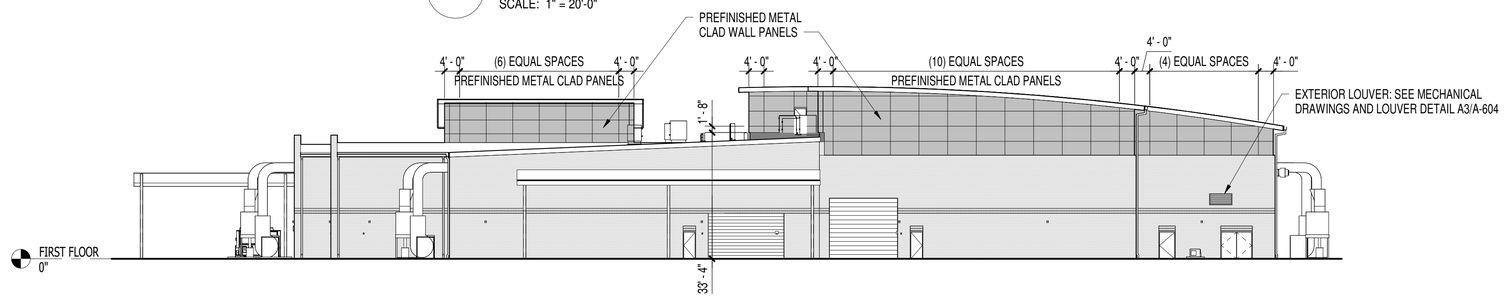


## C1 EAST ELEVATION

SCALE: 1" = 20'-0"

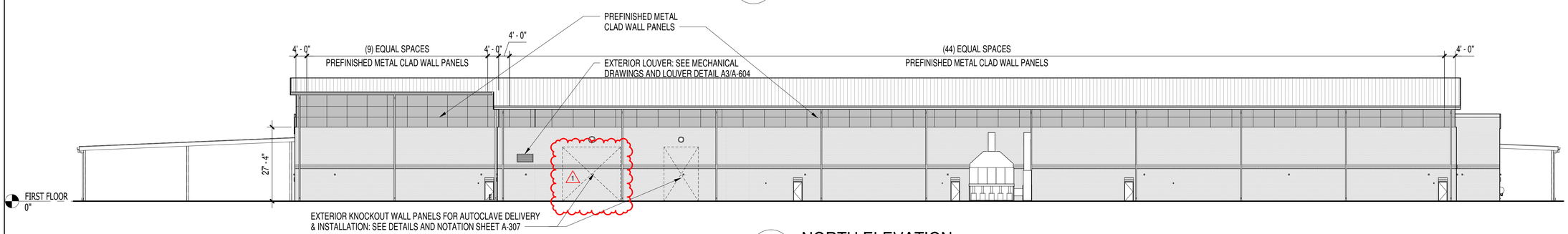


## B1 NORTH ELEVATION

SCALE: 1" = 20'-0"

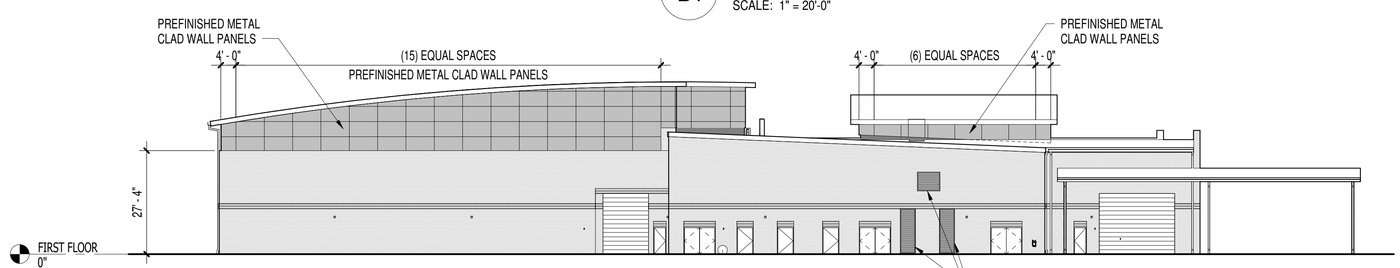


## A1 WEST ELEVATION

SCALE: 1" = 20'-0"

GRAPHIC SCALE: 1"=20'

20' 0 20' 40'

| SYM | Amendment | DESCRIPTION | DATE | APPR |
|---|---|---|---|---|
| 1 | | | 2026.04.07 | |

NAVFAC

DARDEN J. EURE, III REGISTERED ARCHITECT 8840 NORTH CAROLINA NEW BERN NC

24 DECEMBER 2025 SEAL

mbf architects pa

317-C Pollock Street | New Bern, NC 28560
252.637.6373 | mbfarchitects.com

A/E INFO

APPROVED

FOR COMMANDER NAVFAC 4/22/2026

ACTIVITY
Approved by Erik A. Lewis, Infrastructure Engineering Branch Head, FRCE Cherry Point via Electronic Signature

SATISFACTORY TO 12/24/2025

| DES | DLG | DRW | DLG | CHK | DJE |
|---|---|---|---|---|---|

| | |
|---|---|
| PM/DM | KTB/SOM |
| BRANCH MANAGER | CGM |
| CHIEF ENG/ARCH | JWJ |
| FIRE PROTECTION | HPN |

DEPARTMENT OF THE NAVY
NAVAL FACILITIES ENGINEERING SYSTEMS COMMAND
NAVAL FACILITIES ENGINEERING SYSTEMS COMMAND ~ MIDATLANTIC
DESIGN AND CONSTRUCTION (DC) CORE
NAVAL STATION - NORFOLK, VA.
MARINE CORPS AIR STATION CHERRY POINT, NC

# P-995 COMPOSITE REPAIR FACILITY

## EXTERIOR ELEVATIONS

MBF ARCHITECTS P.A. REGISTERED ARCHITECTURAL CORPORATION CERT. NO. 50679 NORTH CAROLINA NEW BERN, N.C.

| | |
|---|---|
| SCALE: | AS INDICATED |
| EPROJECT NO.: | 1692230 |
| STA. PROJ. NO.: | |
| NAVFAC DRAWING NO. | 12938276 |
| SHEET | 128 OF 456 |

A-201

DRAWFORM REVISION: 25 AUGUST 2020

C:\Users\griffith\Documents\2136 ARCH_2023_griffith@mbfarchitects.com.rvt
4/14/2026 11:16:44 AM

File
Print

# TOILET ACCESSORIES LEGEND

| MARK | DESCRIPTION | MARK | DESCRIPTION | MARK | DESCRIPTION |
|---|---|---|---|---|---|
| TTD | TOILET TISSUE DISPENSER | PTD | PAPER TOWEL DISPENSER | RSS | RECESSED SOLID SURFACE SHOWER SHELF |
| GB42 | GRAB BAR: 42" | ITDW | INTEGRAL TOWEL DISPENSER & WASTE RECEPTACLE | SS | SOLID SURFACE SHOWER SHELF |
| GB36 | GRAB BAR: 36" | CTD | PAPER TOWEL DISPENSER: "C" FOLD TYPE | DCS | DIAPER CHANGING STATION |
| GB18 | GRAB BAR: 18" | RTD | PAPER TOWEL DISPENSER: ROLL TYPE | MHS | SHELF / MOP AND BROOM HOLDER |
| GBL | GRAB BAR: L-SHAPED 24" x 18" | EHD | ELECTRIC HAND DRYER | MH | MOP HOOK |
| SND | SANITARY NAPKIN DISPOSAL | SD | SOAP DISPENSER - WALL MOUNTED | TB | TOWEL BAR: 18" |
| SNV | SANITARY NAPKIN VENDOR | SDC | SOAP DISPENSER - COUNTERTOP MOUNTED | SCR | SHOWER CURTAIN ROD |
| TCD | TOILET SEAT COVER DISPENSER | WM | WALL MIRROR: 18" x 36" | RH | ROBE HOOK |
| FSS | FOLDING SHOWER SEAT | WM1 | WALL MIRROR (CUSTOM): SEE ELEVATION | RHA | ROBE HOOK - ACCESSIBLE MOUNTING HEIGHT |
| | | | | | |

NOTES:
1. **CLEARANCES AND HEIGHTS OF FIXTURES AND ACCESSORIES MUST BE IN COMPLIANCE WITH ANSI A117.1 AND THE NCSBC ACCESSIBILITY STANDARDS**
2. ACCESSORIES SPECIFIED APPEAR ON DESIGNATED PLANS, HOWEVER NOT ALL ACCESSORIES SHOWN HERE MAY BE SPECIFIED. COORDINATE WITH PLAN DESIGNATIONS
3. REFERENCE THE SPECIFICATIONS FOR DETAILED PRODUCT INFORMATION INCLUDING ACCEPTABLE MANUFACTURERS, FINISHES, ETC.
4. MOUNT ACCESSORIES SUCH THAT DISPENSER OR OPERATING MECHANISM IS WITHIN ACCESSIBLE FORWARD REACH RANGES DEFINED BY THE ACCESSIBILITY STANDARDS IDENTIFIED ABOVE

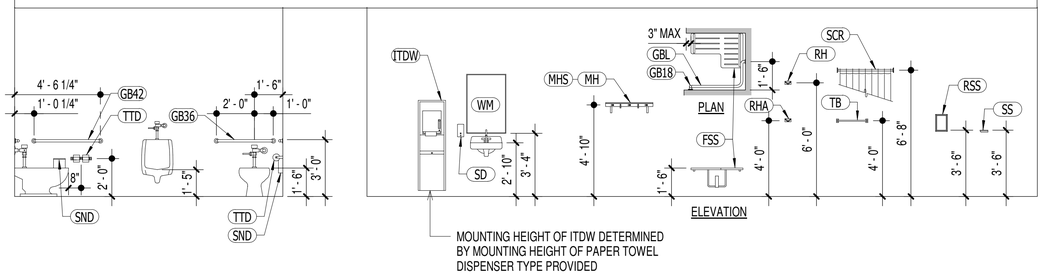


## C1 TOILET ACCESSORY MOUNTING HEIGHTS

SCALE: 1/4" = 1'-0"

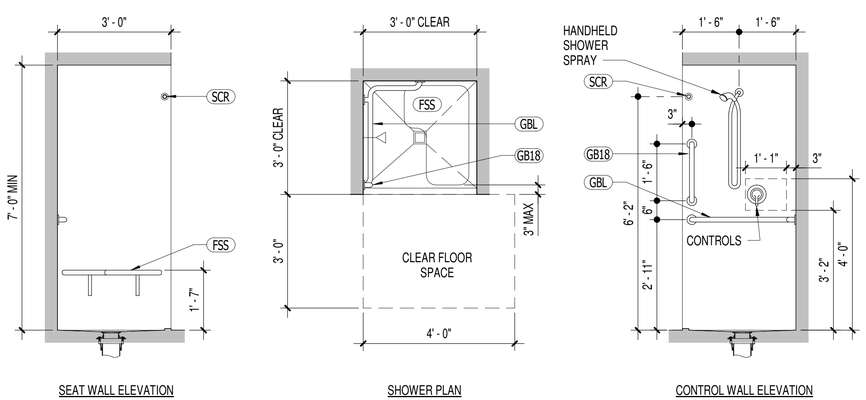


NOTES:
1. SIZE AND CLEARANCES, SECTION 608.2.1, ABA
2. GRAB BARS, SECTIONS 608.3 AND 608.3.1, ABA
3. CONTROLS AND HAND SHOWER, SECTION 608.5, ABA
4. THRESHOLD, SECTION 608.6, ABA
5. SEAT, SECTIONS 610.1, 610.3.2 AND 610.4, ABA

## A1 ACCESSIBLE SHOWER DETAILS

SCALE: 1/2" = 1'-0"

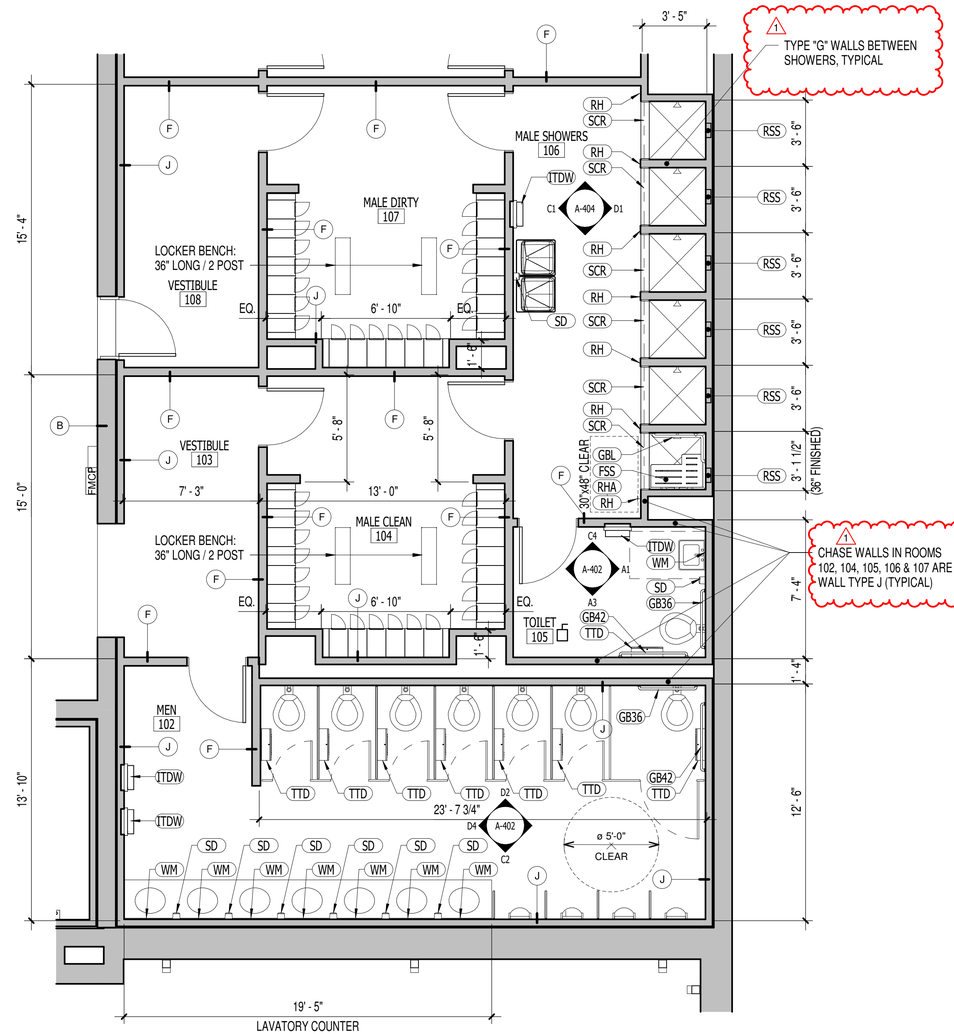


## A4 ENLARGED MEN'S ROOM PLAN

SCALE: 1/4" = 1'-0"

NOTE: ALL DIMENSIONS ARE TO FACE OF STUD.
SEE INTERIORS DRAWINGS FOR LOCKERS.

GRAPHIC SCALE: 1/4"=1'-0"
4' 0 2' 4' 8'

GRAPHIC SCALE: 1/2"=1'-0"
2' 0 1' 2' 4'

MBF ARCHITECTS P.A. REGISTERED ARCHITECTURAL CORPORATION CERT. NO. 50679 NORTH CAROLINA NEW BERN N.C.

| SYM | Amendment DESCRIPTION | DATE | APPR |
|---|---|---|---|
| 1 | | 2026.04.07 | |

NAVFAC

DARDEN J. EURE III REGISTERED ARCHITECT 8840 NORTH CAROLINA NEW BERN NC

24 DECEMBER 2025 SEAL

mbf architects pa
317-C Pollock Street | New Bern, NC 28560
252.637.6373 | mbfarchitects.com
A/E INFO

APPROVED
FOR COMMANDER NAVFAC 4/22/2026
ACTIVITY
Approved by Erik A. Lewis,
Infrastructure Engineering Branch Head,
FRCE Cherry Point via Electronic Signature

SATISFACTORY TO 12/24/2025

| | | | | | |
|---|---|---|---|---|---|
| DES | DLG | DRW | DLG | CHK | DJE |
| PM/DM | KTB/SOM | | | | |
| BRANCH MANAGER | CGM | | | | |
| CHIEF ENG/ARCH | JWJ | | | | |
| FIRE PROTECTION | HPN | | | | |

DEPARTMENT OF THE NAVY
NAVAL FACILITIES ENGINEERING SYSTEMS COMMAND ~ MIDATLANTIC
DESIGN AND CONSTRUCTION (DC) CORE
MARINE CORPS AIR STATION
NAVAL FACILITIES ENGINEERING SYSTEMS COMMAND
NAVAL STATION - NORFOLK, VA
CHERRY POINT, NC

P-995 COMPOSITE REPAIR FACILITY

ENLARGED RESTROOM PLANS AND DETAILS

| | |
|---|---|
| SCALE: | AS INDICATED |
| EPROJECT NO.: | 1692230 |
| STA. PROJ. NO.: | |
| NAVFAC DRAWING NO. | 12938286 |
| SHEET | 138 OF 456 |

A-401

DRAWFORM REVISION: 25 AUGUST 2020

C:\Users\griffith\Documents\2136 ARCH_2023_griffith@mbfarchitects.com.rvt
4/14/2026 11:16:47 AM
File
Print

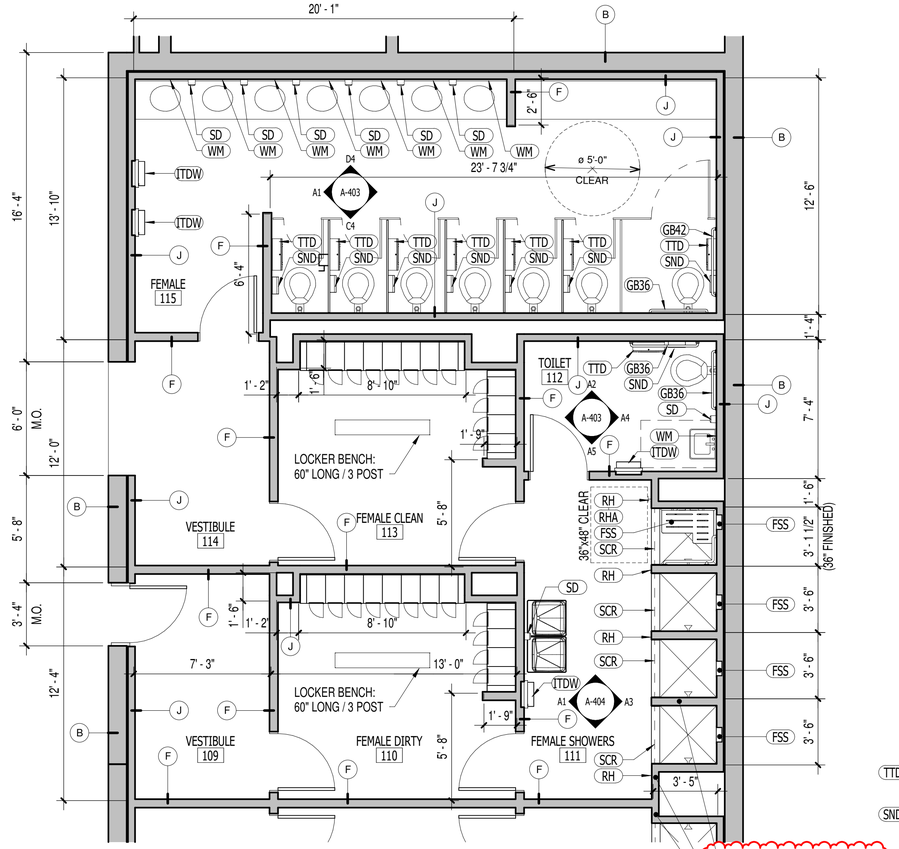


NOTE: ALL DIMENSIONS ARE TO FACE OF STUD.
SEE INTERIORS DRAWINGS FOR LOCKERS.

C1 ENLARGED WOMEN'S ROOM PLAN
SCALE: 1/4" = 1'-0"

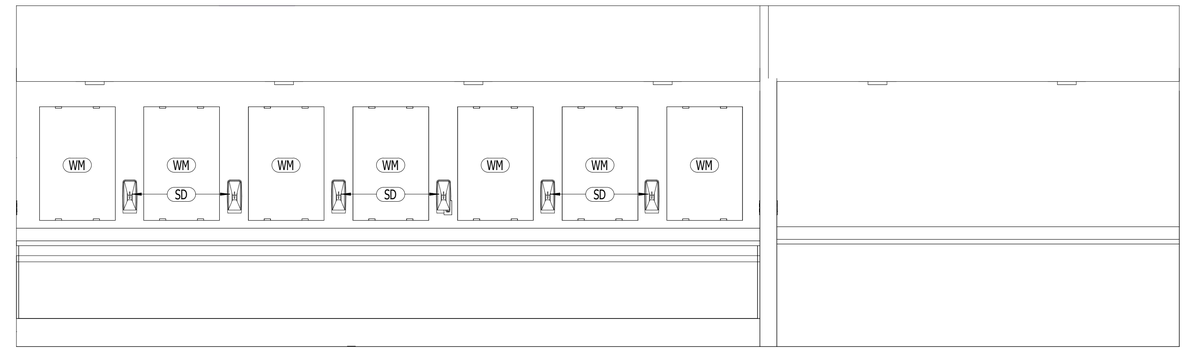

D4 ELEVATION AT FEMALE 115 - PLAN NORTH
SCALE: 1/2" = 1'-0"

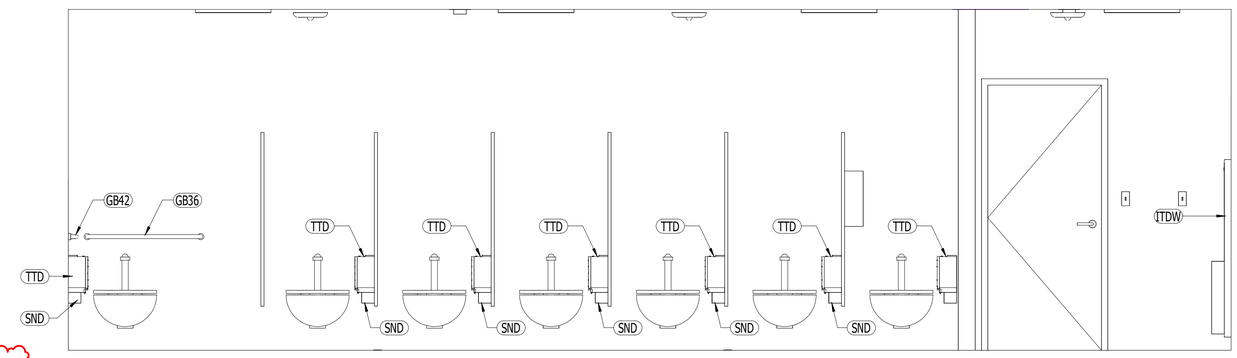

C4 ELEVATION AT FEMALE 115 - PLAN SOUTH
SCALE: 1/2" = 1'-0"

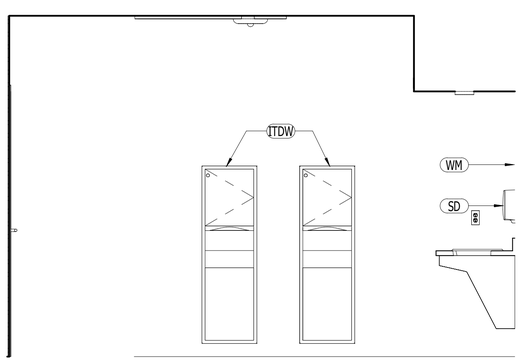

A1 ELEVATION AT FEMALE 115 - PLAN WEST
SCALE: 1/2" = 1'-0"

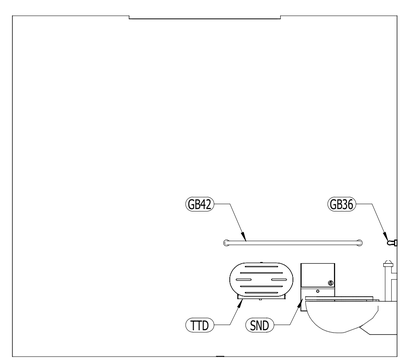

A2 ELEVATION AT TOILET 112 - PLAN NORTH
SCALE: 1/2" = 1'-0"

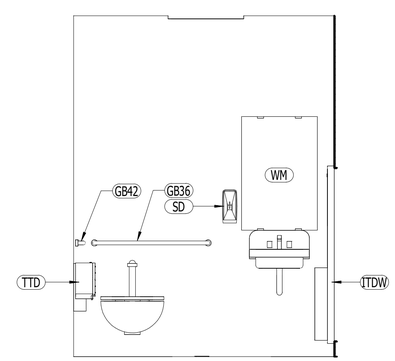

A4 ELEVATION AT TOILET 112 - PLAN EAST
SCALE: 1/2" = 1'-0"

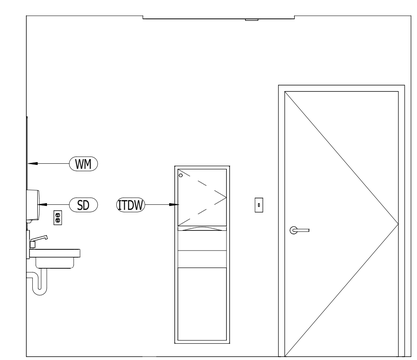

A5 ELEVATION AT TOILET 112 - PLAN SOUTH
SCALE: 1/2" = 1'-0"

GRAPHIC SCALE: 1/4"=1'-0"
4' 0 2' 4' 8'

GRAPHIC SCALE: 1/2"=1'-0"
2' 0 1' 2' 4'

MBF ARCHITECTS P.A. REGISTERED ARCHITECTURAL CORPORATION CERT. NO. 50679 NORTH CAROLINA NEW BERN, N.C.

| SYM | DESCRIPTION | DATE | APPR |
|---|---|---|---|
| 1 | Amendment | 2026.04.07 | |

NAVFAC

DARDEN J. EURE, III REGISTERED ARCHITECT 8840 NORTH CAROLINA NEW BERN NC
24 DECEMBER 2025 SEAL

mbf architects pa
317-C Pollock Street | New Bern, NC 28560
252.637.6373 | mbfarchitects.com
A/E INFO

APPROVED
FOR COMMANDER NAVFAC 4/22/2026
ACTIVITY
Approved by Erik A. Lewis,
Infrastructure Engineering Branch Head,
FRCE Cherry Point via Electronic Signature

SATISFACTORY TO 12/24/2025

| | | | |
|---|---|---|---|
| DES | DLG | DRW | DLG |
| CHK | DJE | | |
| PM/DM | KTB/SOM | | |
| BRANCH MANAGER | CGM | | |
| CHIEF ENG/ARCH | JWJ | | |
| FIRE PROTECTION | HPN | | |

DEPARTMENT OF THE NAVY
NAVAL FACILITIES ENGINEERING SYSTEMS COMMAND
DESIGN AND CONSTRUCTION (DC) CORE
NAVAL FACILITIES ENGINEERING SYSTEMS COMMAND ~ MIDATLANTIC
NAVAL STATION - NORFOLK, VA.
MARINE CORPS AIR STATION CHERRY POINT, NC

# P-995 COMPOSITE REPAIR FACILITY

## ENLARGED RESTROOM PLANS AND ELEVATIONS

| | |
|---|---|
| SCALE: | AS INDICATED |
| EPROJECT NO.: | 1692230 |
| STA. PROJ. NO.: | |
| NAVFAC DRAWING NO. | 12938288 |
| SHEET | 140 OF 456 |

A-403

DRAWFORM REVISION: 25 AUGUST 2020

C:\Users\griffith\Documents\2136 ARCH_2023_griffith@mbfarchitects.com.rvt
4/14/2026 11:16:52 AM
File
Print

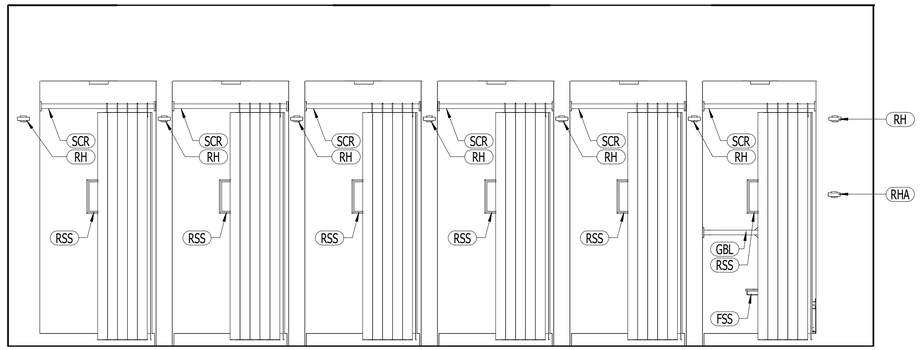


D1 ELEVATION AT MALE SHOWERS 106 - PLAN EAST

SCALE: 1/2" = 1'-0"

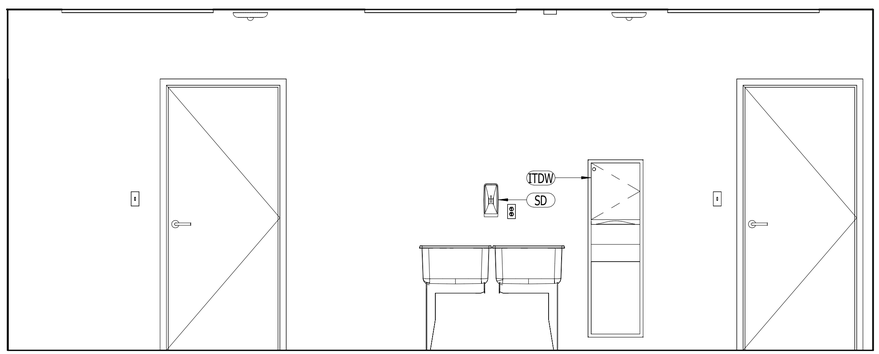


C1 ELEVATION AT MALE SHOWERS 106 - PLAN WEST

SCALE: 1/2" = 1'-0"

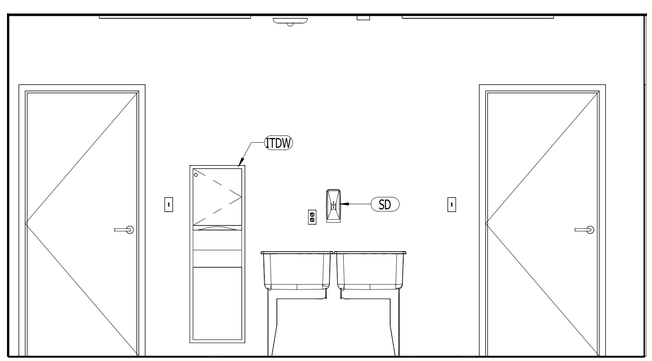


A1 ELEVATION AT FEMALE 111 - PLAN WEST

SCALE: 1/2" = 1'-0"

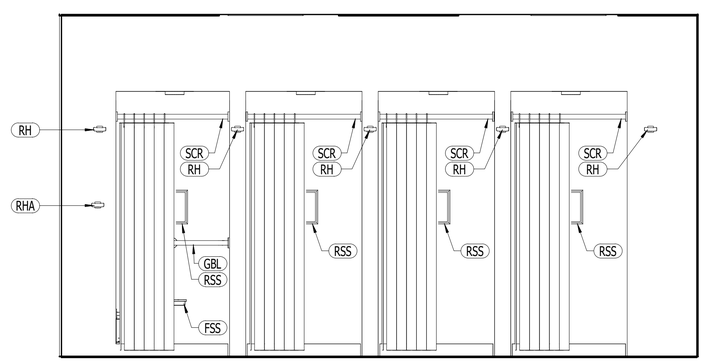


A3 ELEVATION AT FEMALE 111 - PLAN EAST

SCALE: 1/2" = 1'-0"

**RECESSED SHOWER SHELF**

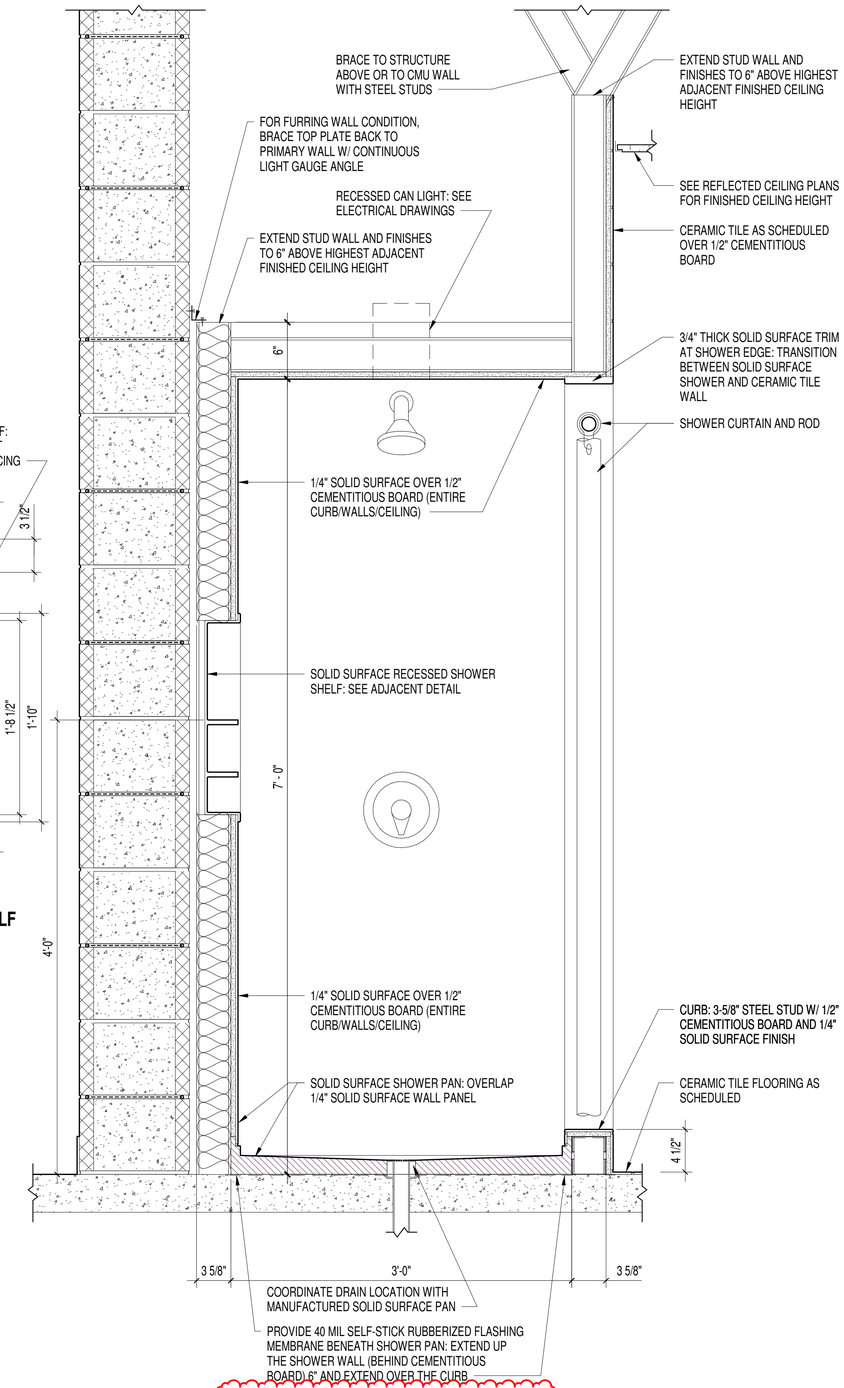


1 A5 SHOWER SECTION

SCALE: 1 1/2" = 1'-0"

GRAPHIC SCALE: 1/2"=1'-0"

2' 0 1' 2' 4'

GRAPHIC SCALE: 1 1/2"=1'-0"

1' 6" 3" 0 1'

| SYM | Amendment | DESCRIPTION | DATE | APPR |
|---|---|---|---|---|
| 1 | | | 2026.04.07 | |

NAVFAC

DARDEN J. EURE III REGISTERED ARCHITECT 8840 NORTH CAROLINA NEW BERN NC

24 DECEMBER 2025 SEAL

mbf architects pa

317-C Pollock Street | New Bern, NC 28560
252.637.6373 | mbfarchitects.com

A/E INFO

APPROVED

FOR COMMANDER NAVFAC 4/22/2026

ACTIVITY

Approved by Erik A. Lewis, Infrastructure Engineering Branch Head, FRCE Cherry Point via Electronic Signature

SATISFACTORY TO 12/24/2025

| DES | DLG | DRW | DLG | CHK | DJE |
|---|---|---|---|---|---|

| | |
|---|---|
| PM/DM | KTB/SOM |
| BRANCH MANAGER | CGM |
| CHIEF ENG/ARCH | JWJ |
| FIRE PROTECTION | HPN |

DEPARTMENT OF THE NAVY
NAVAL FACILITIES ENGINEERING SYSTEMS COMMAND
DESIGN AND CONSTRUCTION (DC) CORE

NAVAL FACILITIES ENGINEERING SYSTEMS COMMAND ~ MIDATLANTIC
NAVAL STATION - NORFOLK, VA.
MARINE CORPS AIR STATION CHERRY POINT, NC

P-995 COMPOSITE REPAIR FACILITY

ENLARGED RESTROOM ELEVATIONS AND SHOWER DETAILS

MBF ARCHITECTS P.A. REGISTERED ARCHITECTURAL CORPORATION CERT. CAROLINA CERT. NO. 50679 NEW BERN N.C.

| | |
|---|---|
| SCALE: | AS INDICATED |
| EPROJECT NO.: | 1692230 |
| STA. PROJ. NO.: | |
| NAVFAC DRAWING NO. | 12938289 |
| SHEET | 141 OF 456 |

A-404

DRAWFORM REVISION: 25 AUGUST 2020

C:\Users\griffith\Documents\2136 ARCH_2023_griffith@mbfarchitects.com.rvt
4/14/2026 11:16:54 AM

File
Print

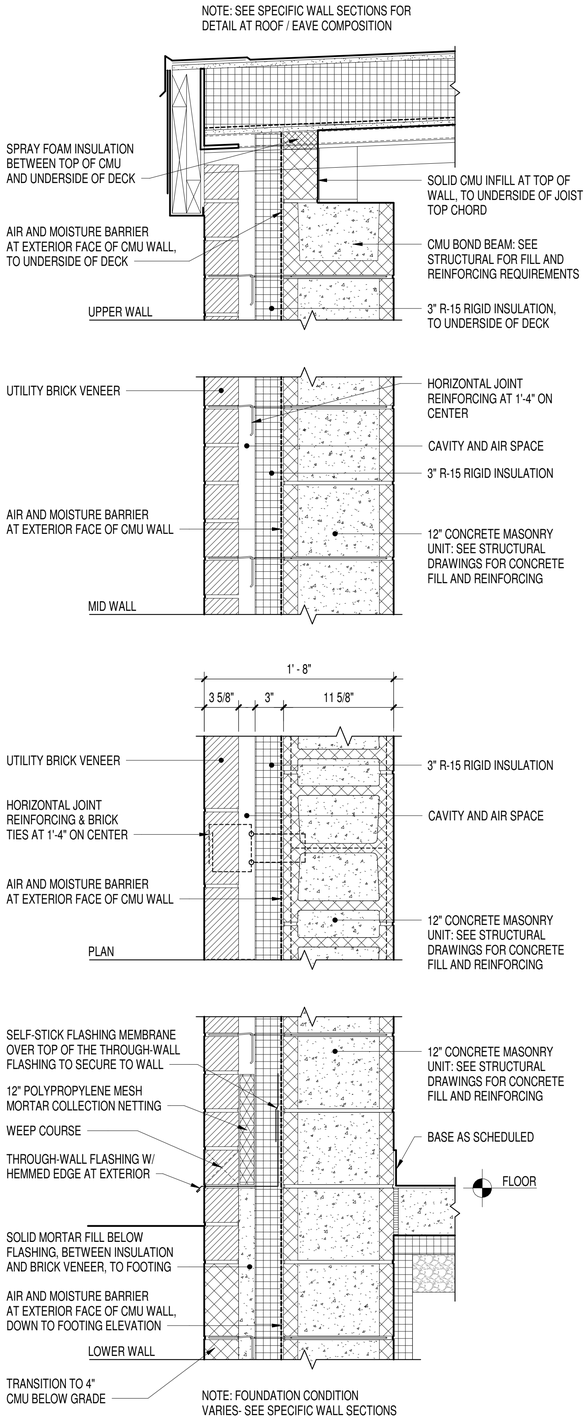


## WALL TYPE A: CMU/BRICK EXTERIOR WALL

SCALE: 1-1/2" = 1'-0"

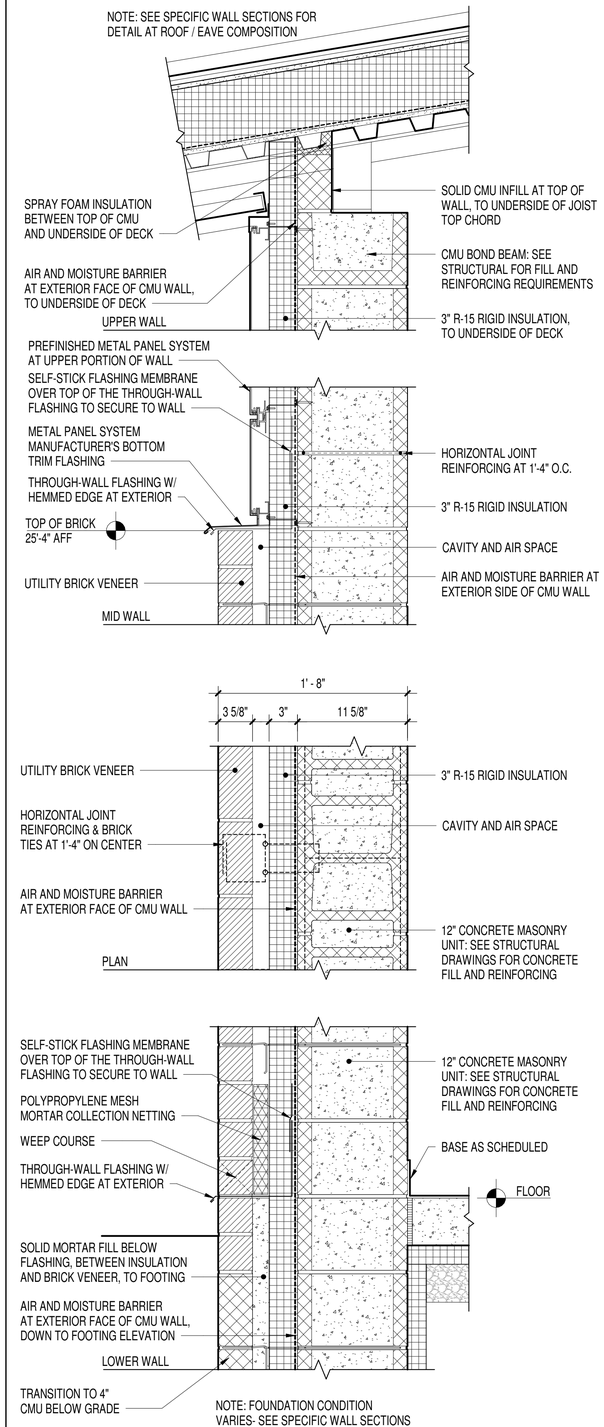


## WALL TYPE A1: CMU/BRICK EXTERIOR WALL

SCALE: 1-1/2" = 1'-0"

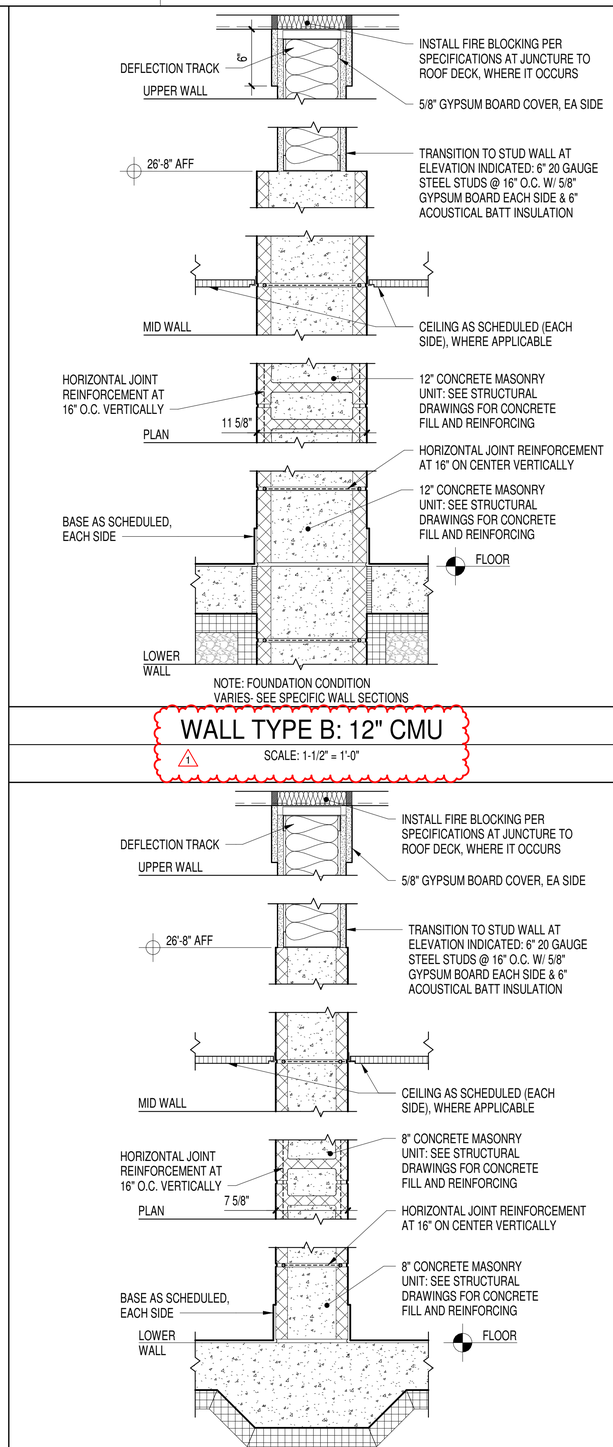


## WALL TYPE B: 12" CMU

1 SCALE: 1-1/2" = 1'-0"




## WALL TYPE C: 8" CMU

1 SCALE: 1-1/2" = 1'-0"

# WALL TYPE NOTES

APPLY TO THIS SHEET ONLY

1. WALL TYPES ARE AS INDICATED ON FLOOR PLANS.
2. REFERENCE FINISH SCHEDULE (INTERIORS DRAWINGS) FOR WALL, CEILING, AND BASE FINISHES.
3. REFERENCE THE LIFE SAFETY DRAWINGS FOR RATED WALL AND SMOKE PARTITION LOCATIONS. SMOKE PARTITIONS AND RATED WALLS MUST BE PROPERLY SEALED TO THE UNDERSIDE OF THE DECK ABOVE. PROVIDE SCHEDULE 40 SLEEVES AT PIPE PENETRATIONS IN RATED PARTITIONS AND SEAL ANNULAR SPACE WITH RATED SEALANT. REFERENCE MECHANICAL DRAWINGS FOR MECHANICAL DUCT DAMPER LOCATIONS.
4. REFERENCE THE STRUCTURAL DRAWINGS FOR BEARING WALL LOCATIONS.
5. GYPSUM BOARD IS 5/8" THICK ABUSE-RESISTANT AS SPECIFIED, TYPE "X", MOISTURE RESISTANT UNLESS OTHERWISE NOTED.
6. PROVIDE 1/2" CEMENTITIOUS BACKER BOARD WHERE CERAMIC TILE IS SCHEDULED FOR WALL FINISH.
7. GYPSUM SHEATHING BOARD IS 5/8" TYPE "X", GLASS-MATT COVERED UNLESS OTHERWISE NOTED.
8. WALL FRAMING MUST BE EXTENDED TO THE UNDERSIDE OF THE DECK ABOVE AT ALL LOCATIONS FOR BRACING UNLESS OTHERWISE NOTED. EXTEND GYPSUM BOARD TO FULL HEIGHT OF WALLS UNLESS OTHERWISE NOTED. SEAL PENETRATIONS.
9. WALLS AND GYPSUM BOARD AT MECHANICAL ROOMS, ELECTRICAL ROOMS, EQUIPMENT ROOMS, JANITOR CLOSETS AND TOILETS MUST BE EXTENDED TO THE UNDERSIDE OF THE DECK ABOVE UNLESS NOTED OTHERWISE. INSTALL AIR BARRIER SEALANT AT PERIMETER OF WALL.
10. PROVIDE 3/4" THICK FIRE RETARDANT TREATED PLYWOOD ON WALLS OF TELECOMM ROOMS, INSTALLED OVER GYPSUM BOARD OR CMU BASE WALL SURFACES: PROVIDE HORIZONTAL 4'x8' SHEETS WITH TOP EDGE AT 7'-0" A.F.F.

GRAPHIC SCALE: 1 1/2"=1'-0"
1' 6" 3" 0 1'

MBF ARCHITECTS P.A. CERT. NO. 50679 REGISTERED ARCHITECTURE CORPORATION NORTH CAROLINA NEW BERN, N.C.

| SYM | Amendment DESCRIPTION | DATE | APPR |
|---|---|---|---|
| 1 | | 2026.04.07 | |

NAVFAC

DARDEN J. EURE III REGISTERED ARCHITECT 8840 NORTH CAROLINA NEW BERN NC
24 DECEMBER 2025 SEAL

mbf architects pa
317-C Pollock Street | New Bern, NC 28560
252.637.6373 | mbfarchitects.com
A/E INFO

APPROVED
FOR COMMANDER NAVFAC 4/22/2026
ACTIVITY
Approved by Erik A. Lewis, Infrastructure Engineering Branch Head, FRCE Cherry Point via Electronic Signature
SATISFACTORY TO 12/24/2025

| | | | | | |
|---|---|---|---|---|---|
| DES | DLG | DRW | DLG | CHK | DJE |
| PM/DM | KTB/SOM | | | | |
| BRANCH MANAGER | CGM | | | | |
| CHIEF ENG/ARCH | JWJ | | | | |
| FIRE PROTECTION | HPN | | | | |

DEPARTMENT OF THE NAVY
NAVAL FACILITIES ENGINEERING SYSTEMS COMMAND
DESIGN AND CONSTRUCTION (DC) CORE
MARINE CORPS AIR STATION

NAVAL FACILITIES ENGINEERING SYSTEMS COMMAND ~ MIDATLANTIC
NAVAL STATION - NORFOLK, VA
CHERRY POINT, NC

P-995 COMPOSITE REPAIR FACILITY

WALL TYPE DETAILS

| | |
|---|---|
| SCALE: | AS INDICATED |
| EPROJECT NO.: | 1692230 |
| STA. PROJ. NO.: | |
| NAVFAC DRAWING NO. | 12938295 |
| SHEET | 147 OF 456 |

A-501

DRAWFORM REVISION: 25 AUGUST 2020

C:\Users\griffith\Documents\2136 ARCH_2023_griffith@mbfarchitects.com.rvt
4/16/2026 9:53:01 AM
File
Print

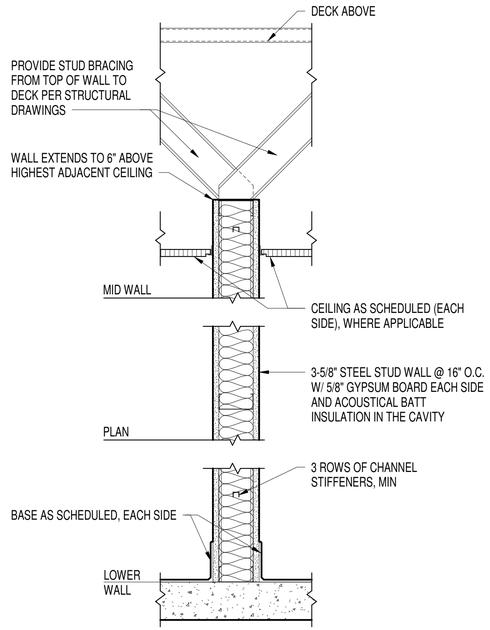


NOTE: FOUNDATION CONDITION VARIES- SEE SPECIFIC WALL SECTIONS

## WALL TYPE D: STUD WALL GYP/GYP

1 SCALE: 1-1/2" = 1'-0"

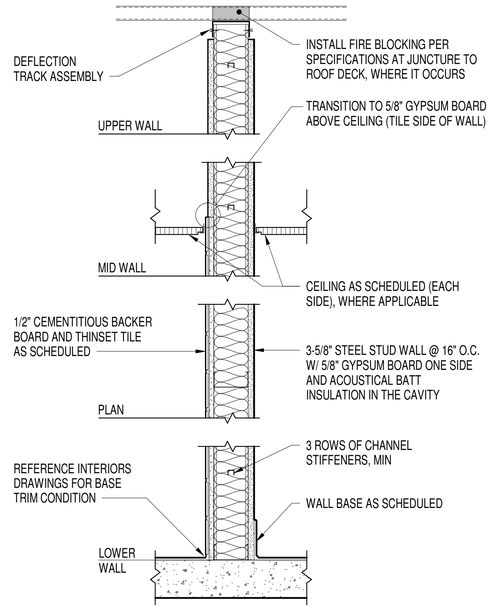


NOTE: FOUNDATION CONDITION VARIES- SEE SPECIFIC WALL SECTIONS

## WALL TYPE E: STUD WALL GYP/TILE

SCALE: 1-1/2" = 1'-0"

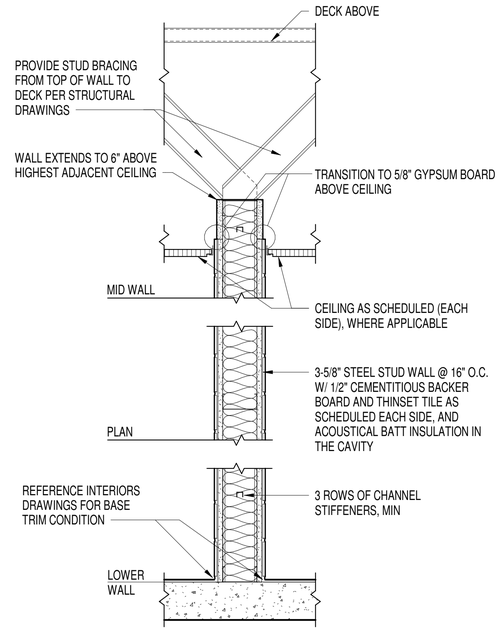


NOTE: FOUNDATION CONDITION VARIES- SEE SPECIFIC WALL SECTIONS

1

## WALL TYPE F: STUD WALL TILE/TILE

SCALE: 1-1/2" = 1'-0"

## WALL TYPE NOTES

APPLY TO THIS SHEET ONLY

1. WALL TYPES ARE AS INDICATED ON FLOOR PLANS.
2. REFERENCE FINISH SCHEDULE (INTERIORS DRAWINGS) FOR WALL, CEILING, AND BASE FINISHES.
3. REFERENCE THE LIFE SAFETY DRAWINGS FOR RATED WALL AND SMOKE PARTITION LOCATIONS. SMOKE PARTITIONS AND RATED WALLS MUST BE PROPERLY SEALED TO THE UNDERSIDE OF THE DECK ABOVE. PROVIDE SCHEDULE 40 SLEEVES AT PIPE PENETRATIONS IN RATED PARTITIONS AND SEAL ANNULAR SPACE WITH RATED SEALANT. REFERENCE MECHANICAL DRAWINGS FOR MECHANICAL DUCT DAMPER LOCATIONS.
4. REFERENCE THE STRUCTURAL DRAWINGS FOR BEARING WALL LOCATIONS.
5. GYPSUM BOARD IS 5/8" THICK ABUSE-RESISTANT AS SPECIFIED, TYPE "X", MOISTURE RESISTANT UNLESS OTHERWISE NOTED.
6. PROVIDE 1/2" CEMENTITIOUS BACKER BOARD WHERE CERAMIC TILE IS SCHEDULED FOR WALL FINISH.
7. GYPSUM SHEATHING BOARD IS 5/8" TYPE "X", GLASS-MATT COVERED UNLESS OTHERWISE NOTED.
8. WALL FRAMING MUST BE EXTENDED TO THE UNDERSIDE OF THE DECK ABOVE AT ALL LOCATIONS FOR BRACING UNLESS OTHERWISE NOTED. EXTEND GYPSUM BOARD TO FULL HEIGHT OF WALLS UNLESS OTHERWISE NOTED. SEAL PENETRATIONS.
9. WALLS AND GYPSUM BOARD AT MECHANICAL ROOMS, ELECTRICAL ROOMS, EQUIPMENT ROOMS, JANITOR CLOSETS AND TOILETS MUST BE EXTENDED TO THE UNDERSIDE OF THE DECK ABOVE UNLESS NOTED OTHERWISE. INSTALL AIR BARRIER SEALANT AT PERIMETER OF WALL.
10. PROVIDE 3/4" THICK FIRE RETARDANT TREATED PLYWOOD ON WALLS OF TELECOMM ROOMS, INSTALLED OVER GYPSUM BOARD OR CMU BASE WALL SURFACES: PROVIDE HORIZONTAL 4'x8' SHEETS WITH TOP EDGE AT 7'-0" A.F.F.

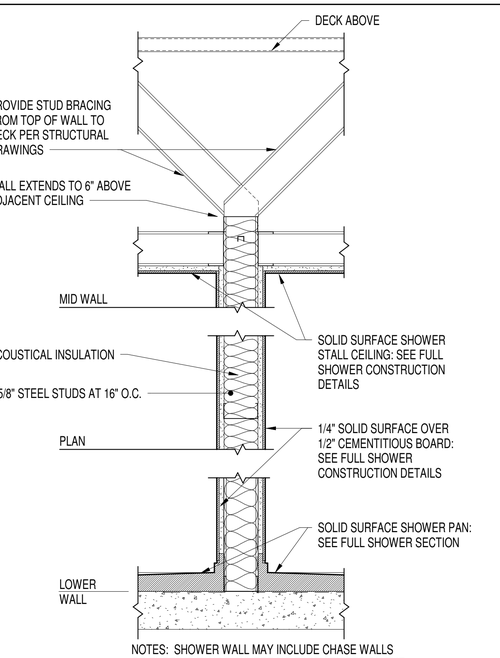


NOTES: SHOWER WALL MAY INCLUDE CHASE WALLS OR FURRING WALLS, WHERE NO FINISH EXISTS ON THE OTHER SIDE OF THE STUD: SEE PLAN. DETAIL ILLUSTRATES WALL CONDITION BETWEEN SHOWERS

## WALL TYPE G: SHOWER WALL

1 SCALE: 1-1/2" = 1'-0"

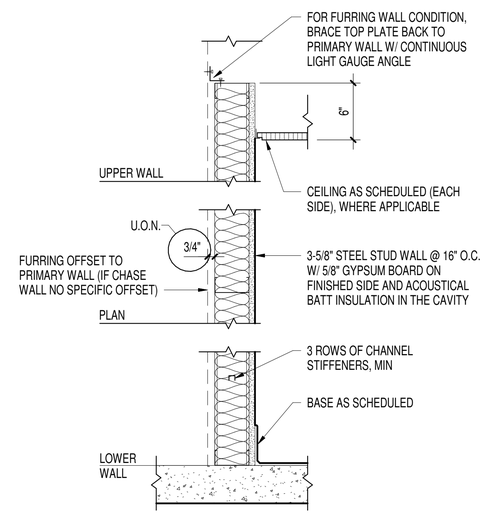


NOTE: FOUNDATION CONDITION VARIES- SEE SPECIFIC WALL SECTIONS

## WALL TYPE H: GYP FURRING/CHASE WALL

SCALE: 1-1/2" = 1'-0"

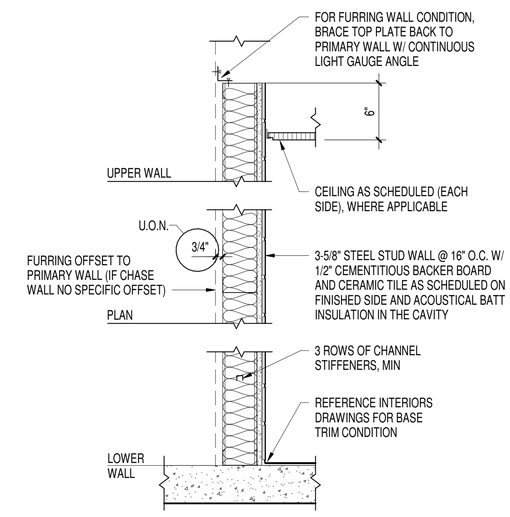


NOTE: FOUNDATION CONDITION VARIES- SEE SPECIFIC WALL SECTIONS

## WALL TYPE J: TILE FURRING/CHASE WALL

SCALE: 1-1/2" = 1'-0"

GRAPHIC SCALE: 1 1/2"=1'-0"
1' 6" 3" 0 1'

| SYM | Amendment | DESCRIPTION | DATE | APPR |
|---|---|---|---|---|
| 1 | | | 2026.04.07 | |

NAVFAC

DARDEN J. EURE III REGISTERED ARCHITECT 8840 NORTH CAROLINA NEW BERN NC

24 DECEMBER 2025 SEAL

mbf architects pa
317-C Pollock Street | New Bern, NC 28560
252.637.6373 | mbfarchitects.com
A/E INFO

APPROVED
FOR COMMANDER NAVFAC 4/22/2026
ACTIVITY
Approved by Erik A. Lewis, Infrastructure Engineering Branch Head, FRCE Cherry Point via Electronic Signature
SATISFACTORY TO 12/24/2025

| | | | |
|---|---|---|---|
| DES | DLG | DRW | DLG |
| CHK | DJE | | |
| PM/DM | KTB/SOM | | |
| BRANCH MANAGER | CGM | | |
| CHIEF ENG/ARCH | JWJ | | |
| FIRE PROTECTION | HPN | | |

DEPARTMENT OF THE NAVY
NAVAL FACILITIES ENGINEERING SYSTEMS COMMAND
DESIGN AND CONSTRUCTION (DC) CORE
NAVAL FACILITIES ENGINEERING SYSTEMS COMMAND - MIDATLANTIC
NAVAL STATION - NORFOLK, VA
MARINE CORPS AIR STATION CHERRY POINT, NC

# P-995 COMPOSITE REPAIR FACILITY

## WALL TYPE DETAILS

SCALE: AS INDICATED
EPROJECT NO.: 1692230
STA. PROJ. NO.:
NAVFAC DRAWING NO. 12938296
SHEET 148 OF 456
A-502

MBF ARCHITECTS P.A. REGISTERED ARCHITECTURE CORPORATION CERT. NO. 50679 NORTH CAROLINA NEW BERN N.C.

DRAWFORM REVISION: 25 AUGUST 2020

C:\Users\griffith\Documents\2136 ARCH_2023_griffith@mbfarchitects.com.rvt
4/14/2026 11:16:55 AM
File
Print

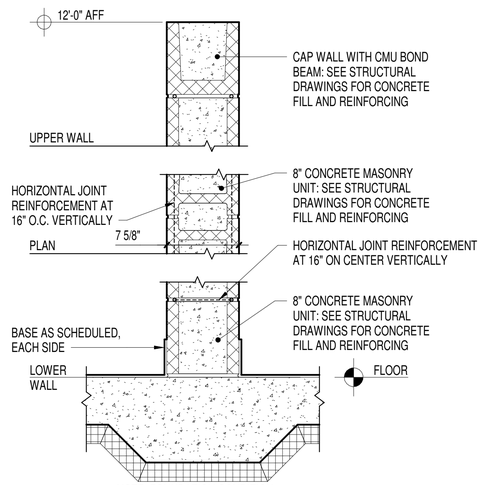


NOTE: FOUNDATION CONDITION VARIES- SEE SPECIFIC WALL SECTIONS

## WALL TYPE K: 8" CMU

SCALE: 1-1/2" = 1'-0"

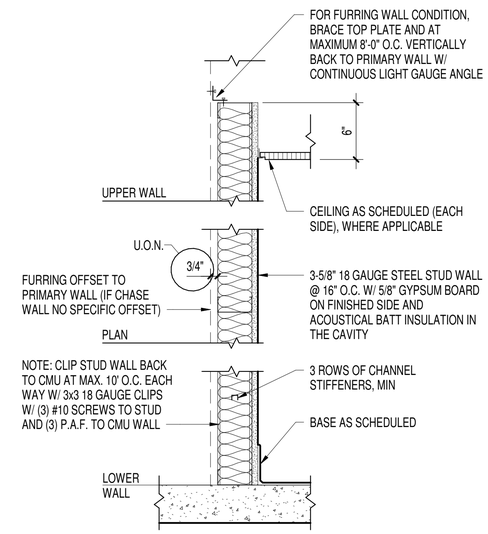


NOTE: FOUNDATION CONDITION VARIES- SEE SPECIFIC WALL SECTIONS

## WALL TYPE L: FURRING / CHASE WALL

1

SCALE: 1-1/2" = 1'-0"

## WALL TYPE NOTES

APPLY TO THIS SHEET ONLY

1. WALL TYPES ARE AS INDICATED ON FLOOR PLANS.
2. REFERENCE FINISH SCHEDULE (INTERIORS DRAWINGS) FOR WALL, CEILING, AND BASE FINISHES.
3. REFERENCE THE LIFE SAFETY DRAWINGS FOR RATED WALL AND SMOKE PARTITION LOCATIONS. SMOKE PARTITIONS AND RATED WALLS MUST BE PROPERLY SEALED TO THE UNDERSIDE OF THE DECK ABOVE. PROVIDE SCHEDULE 40 SLEEVES AT PIPE PENETRATIONS IN RATED PARTITIONS AND SEAL ANNULAR SPACE WITH RATED SEALANT. REFERENCE MECHANICAL DRAWINGS FOR MECHANICAL DUCT DAMPER LOCATIONS.
4. REFERENCE THE STRUCTURAL DRAWINGS FOR BEARING WALL LOCATIONS.
5. GYPSUM BOARD IS 5/8" THICK ABUSE-RESISTANT AS SPECIFIED, TYPE "X", MOISTURE RESISTANT UNLESS OTHERWISE NOTED.
6. PROVIDE 1/2" CEMENTITIOUS BACKER BOARD WHERE CERAMIC TILE IS SCHEDULED FOR WALL FINISH.
7. GYPSUM SHEATHING BOARD IS 5/8" TYPE "X", GLASS-MATT COVERED UNLESS OTHERWISE NOTED.
8. WALL FRAMING MUST BE EXTENDED TO THE UNDERSIDE OF THE DECK ABOVE AT ALL LOCATIONS FOR BRACING UNLESS OTHERWISE NOTED. EXTEND GYPSUM BOARD TO FULL HEIGHT OF WALLS UNLESS OTHERWISE NOTED. SEAL PENETRATIONS.
9. WALLS AND GYPSUM BOARD AT MECHANICAL ROOMS, ELECTRICAL ROOMS, EQUIPMENT ROOMS, JANITOR CLOSETS AND TOILETS MUST BE EXTENDED TO THE UNDERSIDE OF THE DECK ABOVE UNLESS NOTED OTHERWISE. INSTALL AIR BARRIER SEALANT AT PERIMETER OF WALL.
10. PROVIDE 3/4" THICK FIRE RETARDANT TREATED PLYWOOD ON WALLS OF TELECOMM ROOMS, INSTALLED OVER GYPSUM BOARD OR CMU BASE WALL SURFACES: PROVIDE HORIZONTAL 4'x8' SHEETS WITH TOP EDGE AT 7'-0" A.F.F.

GRAPHIC SCALE: 1 1/2"=1'-0"

1' 6" 3" 0 1'

M&F ARCHITECTS P.A. REGISTERED ARCHITECTURAL CORPORATION CERT. NO. 50679 NORTH CAROLINA NEW BERN, N.C.

| SYM | Amendment DESCRIPTION | DATE | APPR |
|---|---|---|---|
| 1 | | 2026.04.07 | |

NAVFAC

DARDEN J. EURE III REGISTERED ARCHITECT 8840 NORTH CAROLINA NEW BERN NC

24 DECEMBER 2025 SEAL

mbf architects pa

317-C Pollock Street | New Bern, NC 28560
252.637.6373 | mbfarchitects.com

A/E INFO

APPROVED

FOR COMMANDER NAVFAC 4/22/2026

ACTIVITY

Approved by Erik A. Lewis, Infrastructure Engineering Branch Head, FRCE Cherry Point via Electronic Signature

SATISFACTORY TO 12/24/2025

| DES | DLG | DRW | DLG | CHK | DJE |
|---|---|---|---|---|---|

| | |
|---|---|
| PM/DM | KTB/SOM |
| BRANCH MANAGER | CGM |
| CHIEF ENG/ARCH | JWJ |
| FIRE PROTECTION | HPN |

DEPARTMENT OF THE NAVY
NAVAL FACILITIES ENGINEERING SYSTEMS COMMAND
NAVAL FACILITIES ENGINEERING SYSTEMS COMMAND ~ MIDATLANTIC
DESIGN AND CONSTRUCTION (DC) CORE
NAVAL STATION - NORFOLK, VA.
MARINE CORPS AIR STATION CHERRY POINT, NC

P-995 COMPOSITE REPAIR FACILITY

WALL TYPE DETAILS

| | |
|---|---|
| SCALE: | AS INDICATED |
| EPROJECT NO.: | 1692230 |
| STA. PROJ. NO.: | |
| NAVFAC DRAWING NO. | 12938297 |
| SHEET | 149 OF 456 |

A-503

DRAWFORM REVISION: 25 AUGUST 2020

File C:\Users\griffith\Documents\2136 ARCH_2023_griffith@mbfarchitects.com.rvt
Print 4/16/2026 9:53:01 AM

# ROOM FINISH SCHEDULE

| ROOM NO. | ROOM NAME | FLOOR FINISH | BASE FINISH | WALL FINISH | CEILING FINISH | NOTES |
|---|---|---|---|---|---|---|
| 101 | VESTIBULE | RES-1 | RES-1 | PNT-1 | ACT-1 | |
| 102 | MEN | T-1 | - | T-2, T-3 | ACT-1 | 1, 4 |
| 103 | VESTIBULE | T-1 | - | T-2, T-3 | ACT-1 | 1, 4 |
| 104 | MALE CLEAN | T-1 | - | T-2, T-3 | PNT-4 | 1, 4 |
| 105 | TOILET | T-1 | - | T-2, T-3 | PNT-4 | 1, 4 |
| 106 | MALE SHOWERS | T-1 | - | T-2, T-3 | PNT-4 | 1, 4 |
| 107 | MALE DIRTY | T-1 | - | T-2, T-3 | PNT-4 | 1, 4 |
| 108 | VESTIBULE | T-1 | - | T-2, T-3 | ACT-1 | 1, 4 |
| 109 | VESTIBULE | T-1 | - | T-2, T-3 | ACT-1 | 1, 4 |
| 110 | FEMALE DIRTY | T-1 | - | T-2, T-3 | PNT-4 | 1, 4 |
| 111 | FEMALE SHOWERS | T-1 | - | T-2, T-3 | PNT-4 | 1, 4 |
| 112 | TOILET | T-1 | - | T-2, T-3 | PNT-4 | 1, 4 |
| 113 | FEMALE CLEAN | T-1 | - | T-2, T-3 | PNT-4 | 1, 4 |
| 114 | VESTIBULE | T-1 | - | T-2, T-3 | ACT-1 | 1, 4 |
| 115 | FEMALE | T-1 | - | T-2, T-3 | ACT-1 | 1, 4 |
| 116 | JANITOR | SC-1 | RB-2 | FRP-1, PNT-1 | PNT-4 | 2 |
| 117 | COMM | SC-1 | RB-1 | PNT-1 | PNT-4 | |
| 119 | FREEZER | RES-1 | RES-1 | PNT-1 | PNT-4 | |
| 120 | BLADE: DIRTY | RES-1 | RES-1 | PNT-1 | PNT-4 | |
| 121 | SANDING BOOTH | RES-1 | RES-1 | PNT-1 | PNT-4 | |
| 1 122 | COMPOSITE: INCOMING | RES-1 | RES-1 | PNT-1 | PNT-4 | |
| 125 | MAIN CORRIDOR | RES-2 | RES-2 | PNT-1 | PNT-4 | |
| 126 | X-RAY | RES-1 | RES-1 | PNT-1 | PNT-4 | |
| 127 | PRODUCTION SUPPORT | RES-1 | RES-1 | PNT-1 | PNT-4 | |
| 128 | ELEC | SC-1 | RB-1 | PNT-1 | PNT-4 | |
| 129 | COMPRESSOR | SC-1 | RB-1 | PNT-1 | PNT-4 | |
| 130 | AUTOCLAVES | RES-1 | RES-1 | PNT-1 | PNT-4 | |
| 131 | COMPOSITE: DIRTY | RES-1 | RES-1 | PNT-1 | PNT-4 | |
| 132 | SANDING BOOTH | RES-1 | RES-1 | PNT-1 | PNT-4 | |
| 133 | HONEYCOMB MACHINING | RES-1 | RES-1 | PNT-1 | PNT-4 | |
| 134 | HONEYCOMB | RES-1 | RES-1 | PNT-1 | PNT-4 | |
| 135 | CLEAN ROOM STAGING | RES-1 | RES-1 | PNT-5 | ACT-2 | |
| 136 | COMPOSITE: CLEAN | RES-1 | RES-1 | PNT-5 | ACT-2 | |
| 137 | TOOL RM. | RES-1 | RES-1 | PNT-1 | ACT-1 | |
| 138 | COMPOSITE: STORAGE | RES-1 | RES-1 | PNT-1 | PNT-4 | |
| 139 | COMPOSITE: OUTGOING | RES-1 | RES-1 | PNT-1 | PNT-4 | |
| 140 | FIREPUMP | SC-1 | RB-1 | PNT-1 | PNT-4 | |
| 141 | COMPRESSOR | SC-1 | RB-1 | PNT-1 | PNT-4 | |
| 142 | FREEZER | RES-1 | RES-1 | PNT-1 | PNT-4 | |
| 143 | FREEZER | SC-1 | RB-1 | PNT-1 | PNT-4 | |
| 144 | COMM | SC-1 | RB-1 | PNT-1 | PNT-4 | |
| 145 | PREP | RES-1 | RES-1 | PNT-1 | ACT-1 | |
| 146 | ELEC | SC-1 | RB-1 | PNT-1 | PNT-4 | |
| 147 | MECHANICAL | SC-1 | RB-1 | PNT-1 | PNT-4 | |
| 1 148 | MECHANICAL | SC-1 | RB-1 | PNT-1 | PNT-4 | |
| 150 | BACK CORRDIOR | RES-2 | RES-2 | PNT-1 | PNT-4 | |
| 151 | PAINT BOOTH | RES-1 | RES-1 | PNT-1 | PNT-4 | |
| 152 | ELEC | SC-1 | RB-1 | PNT-1 | PNT-4 | |
| 152 | OFFICE | CPT-1 | RB-1 | PNT-1, PNT-2 | ACT-1 | 5 |
| 153 | BLADE BALANCING | RES-1 | RES-1 | PNT-1 | PNT-4 | |
| 153 | OFFICE | CPT-1 | RB-1 | PNT-1, PNT-2 | ACT-1 | 5 |
| 154 | BLADE: POST-BONDING | RES-1 | RES-1 | PNT-1 | PNT-4 | |
| 154 | BULLPEN | CPT-1 | RB-1 | PNT-1, PNT-2 | ACT-1 | 5, 6 |
| 155 | BLADE: CLEAN | RES-1 | RES-1 | PNT-5 | ACT-2 | |
| 156 | CORRIDOR | RES-1 | RES-1 | PNT-1 | ACT-1 | |
| 157 | WELLNESS | LVT-1 | RB-1 | PNT-1 | ACT-1 | |
| 158 | ELEC | SC-1 | RB-1 | PNT-1 | PNT-4 | |
| 159 | STACKER | LVT-1 | RB-1 | PNT-1 | ACT-1 | |
| 160 | STAIR | SC-1 | RB-1 | PNT-1 | PNT-4 | |
| 161 | PERSONNEL | LVT-1 | RB-1 | PNT-1 | ACT-1 | |
| 162 | BREAK | LVT-1 | RB-1 | PNT-1 | ACT-1 | |
| 163 | CORRIDOR | LVT-1 | RB-1 | PNT-1 | ACT-1 | |
| 164 | TRAINING | RES-1 | RES-1 | PNT-1, FRP-2, PNT-2 | ACT-1 | 8 |
| 165 | CONFERENCE | CPT-1 | RB-1 | PNT-1, PNT-2 | ACT-1 | 3, 5, 7 |
| 166 | BULLPEN | CPT-1 | RB-1 | PNT-1, PNT-2 | ACT-1 | 5, 6 |
| 167 | OFFICE | CPT-1 | RB-1 | PNT-1, PNT-2 | ACT-1 | 5 |
| 168 | OFFICE | CPT-1 | RB-1 | PNT-1, PNT-2 | ACT-1 | 5 |
| 169 | OFFICE | CPT-1 | RB-1 | PNT-1, PNT-2 | ACT-1 | 5, 6 |

## SHEET NOTES

A. FINISHES INDICATED ARE THE APPROVED BASIS OF DESIGN TO CONVEY COLOR, PATTERN, TEXTURE AND SALIENT CHARACTERISTICS ONLY. THE LISTING OF MANUFACTURER INFORMATION IS NOT INTENDED TO LIMIT THE SELECTION OF PRODUCTS PROVIDED BY OTHER MANUFACTURERS. PRODUCTS MEETING THESE CRITERIA WILL BE CONSIDERED AND MUST BE REVIEWED BY THE INTERIOR DESIGNER OF RECORD (IDOR) AND THE NAVFAC INTERIOR DESIGNER AND APPROVED BY THE CONTRACTING OFFICER.

B. FINISH ITEMS ARE NOT TO BE SUBSTITUTED DUE TO ORDERING LEAD TIMES. IT IS THE CONTRACTOR 'S RESPONSIBILITY TO ORDER ALL MATERIALS IN TIME TO AVOID DELAYS.

C. COORDINATE THERMOSTAT LOCATIONS WITH MECHANICAL DRAWINGS AND CONSTRUCTION MANAGER. INSTALL THERMOSTATS NEAR A CORNER OF THE ROOM OR BY LIGHT SWITCHES. DO NOT INSTALL THERMOSTATS IN THE CENTER OF A WALL.

D. SPRAY PAINT ELECTRICAL PANELS, ACCESS PANELS, AND EXPANSION JOINTS TO MATCH THE ADJACENT WALL COLOR. PANELS PAINTED BY BRUSH ARE NOT ACCEPTABLE

E. ALL FLOORING TRANSITIONS MUST MEET ABA GUIDELINES. FLOORING TRANSITIONS OCCURRING UNDER DOORS MUST BE CENTERED UNDER DOOR.

F. ALL WALL AND CEILING FINISHES IN VERTICAL EXIT WAYS, EXIT LOBBIES, AND EXIT CORRIDORS MUST MEET MINIMUM CLASS A RATING.

G. ROOMS IDENTIFIED TO RECEIVE TILE ON WALLS MUST INCLUDE METAL TRANSITIONS ON ALL OUTSIDE AND INSIDE CORNERS AS WELL AS THE INTERSECTION BETWEEN FLOOR AND WALL TILE WHERE APPLICABLE FOR A COMPLETE INSTALLATION.

H. INSTALL CORNER GUARD ON ALL OUTSIDE CORNERS. INSTALL END CAPS ON ALL OPEN ENDED WALLS. CORNER GUARDS AND END CAPS MUST BE FULL HEIGHT AND SHOULD NOT BE USED ON CMU WALLS, TILED WALLS, OR MANUFACTURED STONE WALLS. ADMIN OFFICES TO RECEIVE CORNER GUARD CG-1. SHOP AREAS TO RECEIVE CORNER GUARD CG-2

I. ALL AREAS TO RECEIVE RESILIENT BASE (RB-1) WITH THE EXCEPTION OF AREAS RECEIVING FLOOR TILE OR EPOXY RESINOUS FLOORING.

J. ALL WALLS TO BE PAINTED (PNT-1) UNLESS OTHERWISE INDICATED. ALL HOLLOW METAL DOORS AND DOOR FRAMES TO BE PAINTED (PNT-3). ALL GWB AND EXPOSED CEILINGS TO BE PAINTED (PNT-4).

K. ALL SHOWER PANS AND SHOWERS WALLS TO BE SOLID SURFACE (SS-2).

L. ALL TOILET PARTITIONS, LOCKERS & LOCKER ROOM BENCHES TO BE HDPE FINISH (HDP-1)

M. ALL INTERIOR WOOD DOORS TO BE FINISHED (WD-1).

N. ALL TILE TO RECEIVE GROUT FINISH (GR-1).

O. ALL MATERIALS/PRODUCTS ARE TO BE INSTALLED PER MANUFACTURER'S INSTALLATION REQUIREMENTS.

P. SEE I-601 FOR ROOM FINISH SCHEDULE. SEE I-602 FOR FINISH LEGEND.

## FINISH SCHEDULE KEY NOTES

1. SEE A1/I-202 FOR TYPICAL RESTROOM WALL TILE ELEVATION.
2. SEE A2/I-202 FOR TYPICAL JANITOR WALL ELEVATION.
3. SEE A3/I-203 FOR TYPICAL WALL ELEVATION AT CONFERENCE ROOMS.
4. FLOOR TILE INSTALLATION TO BE 1/3 OFFSET.
5. CARPET TILE INSTALLATION TO BE VERTICAL ASHLAR PATTERN.
6. WINDOWS TO RECEIVE SINGLE LAYER ROLLER SHADE (WS-1). SEE DETAIL D1/I-502.
7. WINDOWS TO RECEIVE DOUBLE LAYER ROLLER SHADE (WS-1 & WS-2). SEE DETAIL D2/I-502.
8. SEE A3/I-201 FOR TYPICAL TRAINING ROOM WALL ELEVATION

| SYM | PFR Revision | DESCRIPTION | DATE | APPR |
|---|---|---|---|---|
| 1 | | | 04/15/2026 | |

NAVFAC

COMMONWEALTH OF VIRGINIA
JAMIE D. KISSEL
Cert No. 001102
12/24/25
CERTIFIED INTERIOR DESIGNER
SEAL

within
INTERIOR DESIGN
1008 GRANBY STREET
NORFOLK, VA 23510
757.224.0489
A/E INFO

APPROVED
Signature on file
FOR COMMANDER NAVFAC
ACTIVITY
Approved by Erik A. Lewis, Infrastructure Engineering Branch Head, FRCE Cherry Point via Electronic Signature
SATISFACTORY TO 12/24/2025
DES WID DRW APG CHK JDK
PM/DM KTB/SOM
BRANCH MANAGER CGM
CHIEF ENG/ARCH JWJ
FIRE PROTECTION HPN

DEPARTMENT OF THE NAVY
NAVAL FACILITIES ENGINEERING SYSTEMS COMMAND ~ MIDATLANTIC
DESIGN AND CONSTRUCTION DCI CORE
NAVAL FACILITIES ENGINEERING SYSTEMS COMMAND
NAVAL STATION - NORFOLK, VA.
MARINE CORPS AIR STATION CHERRY POINT, NC
P-995 COMPOSITE REPAIR FACILITY
SCHEDULES & LEGENDS

SCALE:
EPROJECT NO.: 1692230
STA. PROJ. NO.
NAVFAC DRAWING NO. 12938344
SHEET 196 OF 456
I-601
DRAWFORM REVISION: 25 AUGUST 2020

File Path: W:\2202 P995 Composite Repair Facility\Revit\2136_P995 WID_R23.rvt
Print Date: 4/16/2026 2:12:59 PM

# FINISH LEGEND

| NO. | NAME | LOCATION | MANUFACTURER | MODEL | COLOR | SIZE |
|---|---|---|---|---|---|---|
| ACG-1 | ACOUSTICAL CEILNG GRID | PAIRED W/ ACT-1 | ARMSTRONG CEILINGS | INTERLUDE XL HRC | WHITE | 9/16" |
| ACG-2 | ACOUSTICAL CEILNG GRID | PAIRED W/ ACT-2 | ARMSTRONG CEILINGS | CO-EXTRUDED CLEAN ROOM | WHITE | 15/16" |
| ACT-1 | ACOUSTICAL CEILING TILE | NON GWB OR EXPOSED CEILING LOCATIONS | ARMSTRONG CEILINGS | FINE FISSURED BEVELED TEGULAR | WHITE | 24"X24" |
| ACT-2 | ACOUSTICAL CEILING TILE | CLEAN ROOMS | ARMSTRONG CEILINGS | CLEAN ROOM FL | WHITE | 24"X24" |
| CG-1 | CORNER GUARD | OUTSIDE CORNERS IN ADMIN SPACES | INPRO | SOLID | GALA 0380 | 3" WING, INSTALL 8' HIGH |
| CG-2 | STEEL CORNER GUARD | OUTSIDE CORNERS IN SHOP AREAS | INPRO | METALLIC | STAINLESS STEEL | 3" WING, INSTALL 8' HIGH |
| CP-1 | CABINET PULL | CASEWORK DOORS & DRAWERS | HAFELE | 101.20.744 | STAINLESS STEEL | 3" CENTER TO CENTER |
| CPT-1 | CARPET TILE | OPEN OFFICE | PATCRAFT | ON NEUTRAL GROUND 1 | THREADED, BRAID | 18"X36" |
| FRP-1 | FIBERGLASS REINFORCED PANEL | JANITOR CLOSET | MARLITE | STANDARD PEBBLED | MED GREY P430N | 48"H |
| FRP-2 | FIBERGLASS REINFORCED PANEL | TRAINING ROOM | MARLITE | ARTIZAN MAX | KISMET, STONE | 60"H |
| GR-1 | GROUT | ALL TILE LOCATIONS | CUSTOM BUILDING PRODUCTS | EPOXY GROUT | DOVE GRAY 370 | - |
| HDP-1 | HIGH DENSITY POLYETHYLENE | TOILET PARTITIONS & LOCKERS | SCRANTON PRODUCTS | HINY HIDERS | GREY | - |
| LVT-1 | LUXURY VINYL TILE | ADMIN COMMON AREAS | PATCRAFT | LINOCUT | BAREN | 9"X36" |
| PLAM-1 | PLASTIC LAMINATE | CASEWORK | FORMICA | 8845 | BLEACHED LEGNO | - |
| PNT-1 | PAINT | PRIMARY WALLS | SHERWIN WILLIAMS | SW 7056 | RESERVED WHITE | - |
| PNT-2 | ACCENT PAINT | ACCENT WALLS | SHERWIN WILLIAMS | SW 7668 | MARCH WIND | - |
| PNT-3 | PAINT | DOOR FRAMES | SHERWIN WILLIAMS | SW 7674 | PEPPERCORN | - |
| PNT-4 | PAINT | GWB & EXPOSED CEILINGS | SHERWIN WILLIAMS | SW 7757 | HIGH REFLECTIVE WHITE | - |
| PNT-5 | PAINT (SEMI-GLOSS) | CLEAN ROOMS | SHERWIN WILLIAMS | SW 7056 | RESERVED WHITE | - |
| RB-1 | RUBBER BASE | PRIMARY BASE | ROPPE | MILLWORK PROFILE | 123 CHARCOAL | 4"H |
| RB-2 | RUBBER BASE | JANITOR | MARLITE | M612 | MED GREY P430N | - |
| RES-1 | EPOXY RESIN (ESD) | SHOPS | SHERWIN WILLIAMS | RESUFLOR PERFORMANCE HPS | WHITE | - |
| RES-2 | EPOXY RESIN (ESD) | MAIN CORRIDOR 125 & BACK CORRIDOR 150 | SHERWIN WILLIAMS | RESUFLOR PERFORMANCE HPS | ROTUNDA RED | - |
| S-1 | SIGNAGE FINISH | FONT | 290 SIGNS | ESSENTIALS COLLECTION | 708 SOFT WHITE | - |
| S-2 | SIGNAGE FINISH | BACKGROUND | 290 SIGNS | ESSENTIALS COLLECTION | 704 BLACK | - |
| S-3 | SIGNAGE FINISH | COPY | 290 SIGNS | ESSENTIALS COLLECTION | 101 SATIN | - |
| SC-1 | SEALED CONCRETE | UTILITY SPACES | SCOFIELD | SELECT SEAL PLUS | CLEAR | - |
| SS-1 | SOLID SURFACE | COUNTERTOPS | MEGANITE | C259A | PALLADIUM | 1/2" THICK |
| SS-2 | SOLID SURFACE | SHOWER SURROUNDS | CORIAN | - | GLACIER WHITE | 1/4" THICK |
| T-1 | FLOOR TILE | BATHROOMS & JANITOR | MOSAIC TILE | LAB | COAL | 12X24 |
| T-2 | WALL TILE | BATHROOMS & JANITOR | ARCHITESSA | ESSENCE REFINED | MONTAUK GREY | 12X24 |
| T-3 | ACCENT TILE | BATHROOM WALLS | ARCHITESSA | GRANT | NAVY MATTE | 4X16 |
| T-4 | SMALL FLOOR TILE | SHOWER AREAS | MOSAIC TILE | LAB | COAL | 1X6 MOSAIC |
| TS-1 | TRANSITION STRIP | LVT TO EPOXY | SCHLUTER SYSTEMS | VINPRO-U | SATIN ANODIZED | - |
| TS-2 | TRANSITION STRIP | CARPET TO EPOXY | SCHLUTER SYSTEMS | RENO-RAMP/K | SATIN ANODIZED | - |
| TS-3 | TRANSITION STRIP | EPOXY TO CONCRETE | SCHLUTER SYSTEMS | SCHIENE | SATIN ANODIZED | - |
| TS-4 | TRANSITION STRIP | FLOOR TILE TO EPOXY | SCHLUTER SYSTEMS | RENO-V | SATIN ANODIZED | - |
| TS-5 | TRANSITION STRIP | TILE INSIDE CORNER | SCHLUTER SYSTEMS | DILEX-AHK | SATIN ANODIZED | - |
| TS-6 | TRANSITION STRIP | TILE OUTSIDE CORNER | SCHLUTER SYSTEMS | QUADEC | SATIN ANODIZED | - |
| TS-7 | TRANSITION STRIP | FRP TO GWB | MARLITE | EDGE M370 | WHITE PVC TRIM | - |
| WD-1 | WOOD FINISH | WOOD ENTRY DOORS | MASONITE ARCHITECTURAL | WHITE OAK | COCOA BEAN | - |
| WS-1 | WINDOW SHADE | EXTERIOR WINDOWS | MERMET | GREENSCREEN EVOLVE 3% | RAIN | - |
| WS-2 | WINDOW SHADE (BLACKOUT) | CONFERENCE | MERMET | ZORA TWILIGHT BLACKOUT | PEWTER/WHITE | - |

1

# FURNITURE SCHEDULE

| NO. | ITEM | QTY | NO. | ITEM | QTY |
|---|---|---|---|---|---|
| A1 | WALL CLOCK | 11 | S4 | TOOL CABINET CONFIGURATION NO. 4 | 2 |
| A2 | COAT HOOK | 2 | S6 | TOOL CABINET CONFIGURATION NO. 6 | 20 |
| A3 | TRASH/RECYCLE RECEPTACLE | 6 | S7 | TOOL CABINET CONFIGURATION NO. 7 | 3 |
| A4 | MOP BUCKET | 1 | S9 | TOOL CABINET CONFIGURATION NO. 9 | 2 |
| A5 | DESK WASTEBASKET | 108 | S10 | TOOL CABINET CONFIGURATION NO. 10 | 8 |
| A6 | RUBBER DRAINAGE MAT | 8 | S11 | 4-HIGH LATERAL FILE CABINET | 8 |
| A7 | DRY ICE BIN | 3 | S12 | 4-HIGH VERTICAL FILE CABINET | 5 |
| A8 | 3-SLOT PAPER RACK | 7 | S13 | PRINT SUPPLY STORAGE CABINET | 2 |
| A9 | WALK-OFF MAT | 12 | S14 | LAPTOP STORAGE CABINET | 4 |
| A10 | FIRE EXTINGUISHER | 18 | S15 | FLAMMABLE STORAGE CABINET | 4 |
| A11 | OILY WASTE CAN | 1 | S17 | HONEYCOMB STORAGE RACK | 6 |
| C1 | HEIGHT ADJUSTABLE SHOP STOOL | 86 | S18 | INDUSTRIAL STORAGE CABINET | 1 |
| C2 | OFFICE TASK CHAIR | 30 | S19 | 72" FREEZER SHELVING | 8 |
| C3 | CONFERENCE CHAIR | 10 | S21 | CORROSIVE SAFETY CABINET | 1 |
| C4 | GUEST CHAIR | 8 | T1 | CONFERENCE TABLE | 1 |
| C5 | LOUNGE CHAIR W/ TABLET ARM | 1 | T2 | ROUND MEETING TABLE | 2 |
| C6 | BREAK ROOM CHAIR | 60 | T3 | CAFETERIA TABLE | 5 |
| D1 | U-SHAPED DESK | 2 | T4 | 180" X 96" PATCH TABLE | 1 |
| D2 | RECTANGULAR STEEL DESK | 5 | T5 | 120" X 36" STAINLESS STEEL GANGING TABLE | 8 |
| D3 | L-SHAPED DESK | 1 | T6 | 192" X 72" PATCH TABLE | 1 |
| E1 | REFRIGERATOR | 5 | T7 | PRINTER TABLE | 1 |
| E2 | MICROWAVE | 6 | WB1 | 72" X 30" ESD WORKBENCH | 15 |
| E4 | UNDER COUNTER REFRIGERATOR | 1 | WB2 | 72" X 30" STAINLESS STEEL WORKBENCH | 21 |
| S1 | 60"W STEEL STORAGE SHELF | 23 | WB3 | 120" X 48" STAINLESS STEEL WORKBENCH | 55 |
| S2 | 72"W STEEL STORAGE SHELF | 9 | WB4 | 120" X 36" BUTCHERBLOCK WORKBENCH | 4 |
| S3 | 48"W STEEL STORAGE SHELF | 2 | WS1 | OPEN OFFICE WORKSTATION | 22 |

# EQUIPMENT SCHEDULE

| NO. | ITEM | QTY |
|---|---|---|
| X1 | TABLETOP DIGITAL SCALE | 1 |
| X2 | SUBZERO UPRIGHT FREEZER | 2 |
| X3 | DVD TABLE | 2 |
| X4 | DEBULK TABLE | 2 |
| X5 | FLOOR SCALE | 1 |
| X6 | 6X6 COMPOSITE OVEN | 2 |
| X7 | 10X10 COMPOSITE OVEN | 2 |
| X8 | FERRIS WHEEL STORAGE RACK | 9 |
| X9 | BLAST CABINET | 2 |
| X10 | SLURRY WET BLASTER | 1 |
| X11 | MOTORIZED PALLET LIFT | 1 |
| X12 | SAMPLE CUTTING MACHINE | 1 |
| X13 | TENSILE TESTER | 1 |
| X14 | MICROSCOPE | 1 |
| X16 | GRINDER | 1 |
| X17 | BAND SAW | 2 |
| X18 | DRILL MILL | 1 |
| X19 | BELT SANDER | 2 |
| X20 | 12X20 COMPOSITE OVEN | 2 |
| X21 | PAINT SHAKER W/ PEDESTAL | 1 |
| X22 | HONEYCOMB MACHINE | 1 |
| X23 | SUBZERO CHEST FREEZER | 2 |

# SHEET NOTES

A. FINISHES INDICATED ARE THE APPROVED BASIS OF DESIGN TO CONVEY COLOR, PATTERN, TEXTURE AND SALIENT CHARACTERISTICS ONLY. THE LISTING OF MANUFACTURER INFORMATION IS NOT INTENDED TO LIMIT THE SELECTION OF PRODUCTS PROVIDED BY OTHER MANUFACTURERS. PRODUCTS MEETING THESE CRITERIA WILL BE CONSIDERED AND MUST BE REVIEWED BY THE INTERIOR DESIGNER OF RECORD (IDOR) AND THE NAVFAC INTERIOR DESIGNER AND APPROVED BY THE CONTRACTING OFFICER.

B. FINISH ITEMS ARE NOT TO BE SUBSTITUTED DUE TO ORDERING LEAD TIMES. IT IS THE CONTRACTOR'S RESPONSIBILITY TO ORDER ALL MATERIALS IN TIME TO AVOID DELAYS.

C. COORDINATE THERMOSTAT LOCATIONS WITH MECHANICAL DRAWINGS AND CONSTRUCTION MANAGER. INSTALL THERMOSTATS NEAR A CORNER OF THE ROOM OR BY LIGHT SWITCHES. DO NOT INSTALL THERMOSTATS IN THE CENTER OF A WALL.

D. SPRAY PAINT ELECTRICAL PANELS, ACCESS PANELS, AND EXPANSION JOINTS TO MATCH THE ADJACENT WALL COLOR. PANELS PAINTED BY BRUSH ARE NOT ACCEPTABLE

E. ALL FLOORING TRANSITIONS MUST MEET ABA GUIDELINES. FLOORING TRANSITIONS OCCURRING UNDER DOORS MUST BE CENTERED UNDER DOOR.

F. ALL WALL AND CEILING FINISHES IN VERTICAL EXIT WAYS, EXIT LOBBIES, AND EXIT CORRIDORS MUST MEET MINIMUM CLASS A RATING.

G. ROOMS IDENTIFIED TO RECEIVE TILE ON WALLS MUST INCLUDE METAL TRANSITIONS ON ALL OUTSIDE AND INSIDE CORNERS AS WELL AS THE INTERSECTION BETWEEN FLOOR AND WALL TILE WHERE APPLICABLE FOR A COMPLETE INSTALLATION.

H. INSTALL CORNER GUARD ON ALL OUTSIDE CORNERS. INSTALL END CAPS ON ALL OPEN ENDED WALLS. CORNER GUARDS AND END CAPS MUST BE FULL HEIGHT AND SHOULD NOT BE USED ON CMU WALLS, TILED WALLS, OR MANUFACTURED STONE WALLS. ADMIN OFFICES TO RECEIVE CORNER GUARD CG-1. SHOP AREAS TO RECEIVE CORNER GUARD CG-2

I. ALL AREAS TO RECEIVE RESILIENT BASE (RB-1) WITH THE EXCEPTION OF AREAS RECEIVING FLOOR TILE OR EPOXY RESINOUS FLOORING.

J. ALL WALLS TO BE PAINTED (PNT-1) UNLESS OTHERWISE INDICATED. ALL HOLLOW METAL DOORS AND DOOR FRAMES TO BE PAINTED (PNT-3). ALL GWB AND EXPOSED CEILINGS TO BE PAINTED (PNT-4).

K. ALL SHOWER PANS AND SHOWERS WALLS TO BE SOLID SURFACE (SS-2).

L. ALL TOILET PARTITIONS, LOCKERS & LOCKER ROOM BENCHES TO BE HDPE FINISH (HDP-1)

1

M. ALL INTERIOR WOOD DOORS TO BE FINISHED (WD-1).

N. ALL TILE TO RECEIVE GROUT FINISH (GR-1).

O. ALL MATERIALS/PRODUCTS ARE TO BE INSTALLED PER MANUFACTURER'S INSTALLATION REQUIREMENTS.

P. SEE I-601 FOR ROOM FINISH SCHEDULE. SEE I-602 FOR FINISH LEGEND.

# ACRONYM LEGEND

| | |
|---|---|
| CFCI | CONTRACTOR FURNISHED CONTRACTOR INSTALLED |
| FF&E | FURNITURE FIXTURES & EQUIPMENT |
| EQ | EQUAL ON BOTH SIDES |
| GFGI | GOVERNMENT FURNISHED GOVERNMENT INSTALLED |
| HPL | HIGH PRESSURE LAMINATE |
| SID | STRUCTURAL INTERIOR DESIGN |
| TYP. | TYPICAL DIMENSION |
| U.O.N. | UNLESS OTHERWISE NOTED |
| V.I.F. | VERIFY IN FIELD |

| SYM | DESCRIPTION | DATE | APPR |
|---|---|---|---|
| 1 | PPI Revision | 04/15/2026 | |

COMMONWEALTH OF VIRGINIA
JAMIE D. KISSEL
Cert. No. 001152
12/24/25
CERTIFIED INTERIOR DESIGNER
SEAL

within
INTERIOR DESIGN
1008 GRANBY STREET
NORFOLK, VA 23510
757.224.0489
A/E INFO

APPROVED
James E. Donahue, R.A.
FOR COMMANDER NAVFAC 4/22/2026

ACTIVITY
Approved by Erik A. Lewis, Infrastructure Engineering Branch Head, FRCE Cherry Point via Electronic Signature

SATISFACTORY TO 12/24/2025

| | |
|---|---|
| DES | WID |
| DRW | APG |
| CHK | JDK |
| PM/DM | KTB/SOM |
| BRANCH MANAGER | CGM |
| CHIEF ENG/ARCH | JWJ |
| FIRE PROTECTION | HPN |

DEPARTMENT OF THE NAVY
NAVAL FACILITIES ENGINEERING SYSTEMS COMMAND
NAVAL FACILITIES ENGINEERING SYSTEMS COMMAND ~ MIDATLANTIC
DESIGN AND CONSTRUCTION (DC) CORE
NAVAL STATION - NORFOLK, VA
MARINE CORPS AIR STATION
CHERRY POINT, NC

## P-995 COMPOSITE REPAIR FACILITY

## SCHEDULES & LEGENDS

| | |
|---|---|
| SCALE: | 1/8" = 1'-0" |
| EPROJECT NO.: | 1692230 |
| STA. PROJ. NO. | |
| NAVFAC DRAWING NO. | 12938345 |
| SHEET | 197 OF 456 |

I-602

DRAWFORM REVISION: 25 AUGUST 2020

File Path: W:\2202 P995 Composite Repair Facility\Revit\2136_P995 WID_R23.rvt
Print Date: 4/16/2026 2:13:00 PM