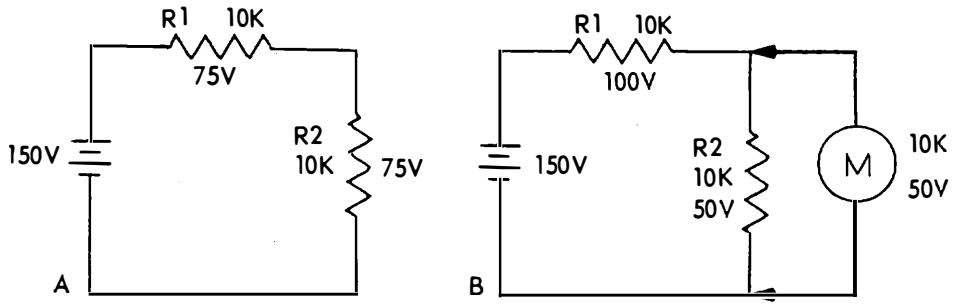

179.10

Figure 3-11.—Shunting action caused by a voltmeter.

Sensitivity

The sensitivity of a voltmeter is given in ohms per volt, (Ω/E), and may be determined by dividing the resistance, R_m, of the meter plus the series resistance R_s, by the full scale reading in volts. Thus, in equation form, sensitivity = $(R_m + R_s)/E$. This is the same as saying that the sensitivity is equal to the reciprocal of the full scale deflection current. In equation form then,

$$\text{Sensitivity} = \frac{\text{ohms}}{\text{volts}} = \frac{1}{\frac{\text{volts}}{\text{ohms}}} = \frac{1}{\text{amperes}}$$

Thus, the sensitivity of a 100 microampere movement is the reciprocal of .0001 ampere, or 10,000 ohms per volt.

Accuracy

The accuracy of a meter is generally expressed in percent. For example, a meter that has an accuracy of 1 percent will indicate a value that is within 1 percent of the correct value. The statement means that if the correct value is 100 units, the meter indication may be anywhere within the range of 99 to 101 units.

METERS USED FOR MEASURING RESISTANCE

The two instruments most commonly used to check the continuity, or to measure the resistance of a circuit or circuit element, are the OHMMETER and the MEGGER (Megohmmeter). The ohmmeter is widely used to measure resistance and check the continuity of electrical circuits and devices. Its range usually extends to only a few megohms. The megger is widely used for measuring insulation resistance, such as between a wire and the outer surface of its insulation, and insulation resistance of cables and insulators. The range of a megger may be extended to more than 1000 megohms.

The Ohmmeter

The ohmmeter consists of a d.c. milliammeter, which was discussed earlier in this chapter, with a few added features. The added features are:

1. A d.c. source of potential.
2. One or more resistors (one of which is variable).

A simple ohmmeter circuit is shown in figure 3-12.

The ohmmeters pointer deflection is controlled by the amount of battery current passing through the moving coil. Before measuring the resistance of an unknown resistor or electrical circuit, the ohmmeter must be calibrated. If the value of resistance to be measured can be estimated within reasonable limits, a range is selected which will give approximately half scale deflection when this resistance is inserted between the probes. If the resistance is unknown the selector switch is set on the highest scale. Whatever range is selected the meter must be calibrated to read zero before the unknown resistance is measured.

Calibration is accomplished by first shorting the test leads together as shown in figure 3-12. With the test leads shorted, there will be a complete series circuit consisting of the 3 volt source, the resistance of the meter coil, R_m, the resistance of the zero-adjust rheostat,