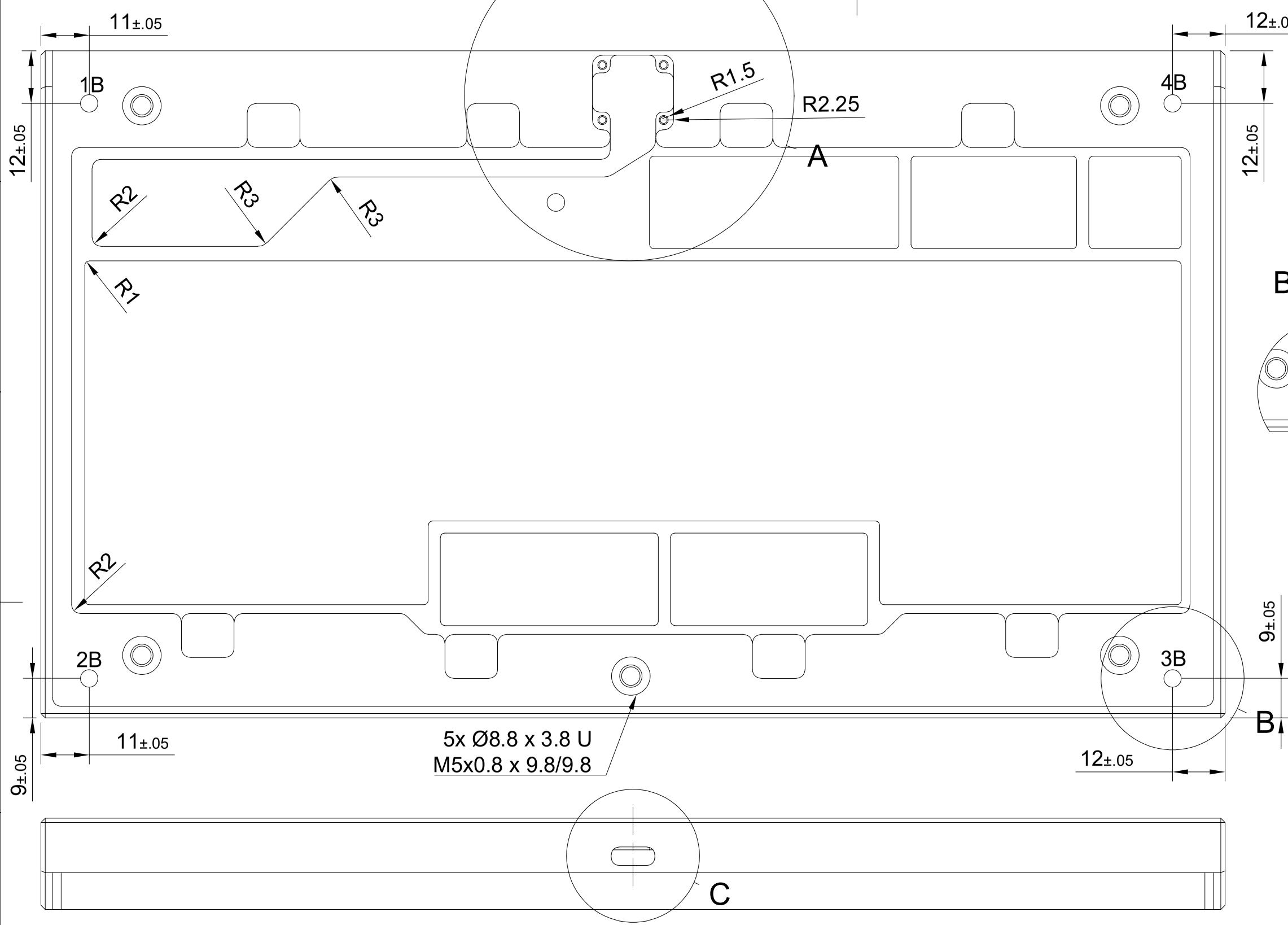

A (1:1)

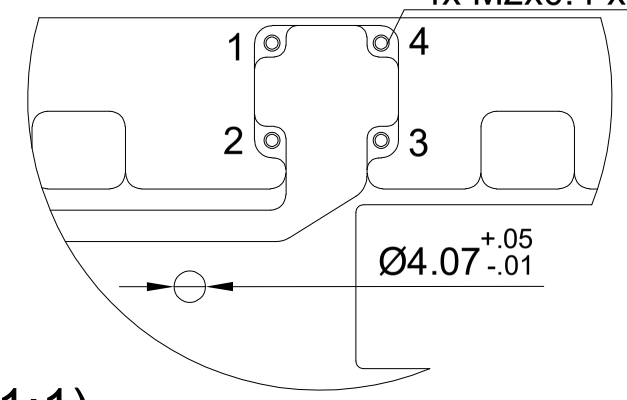

B (1:1)

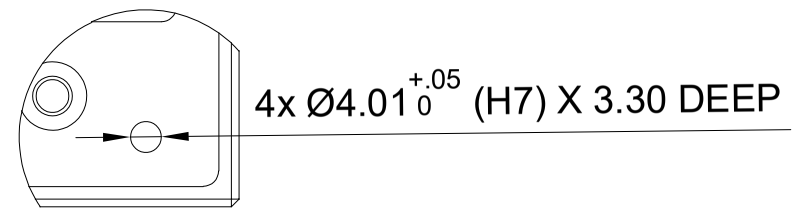

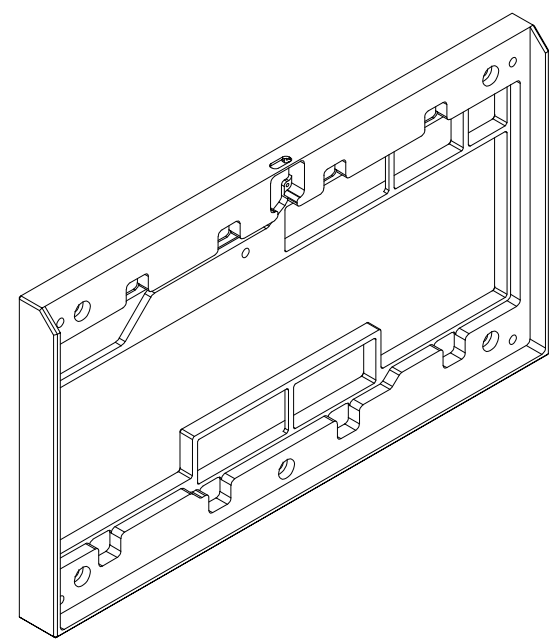

C (2:1)

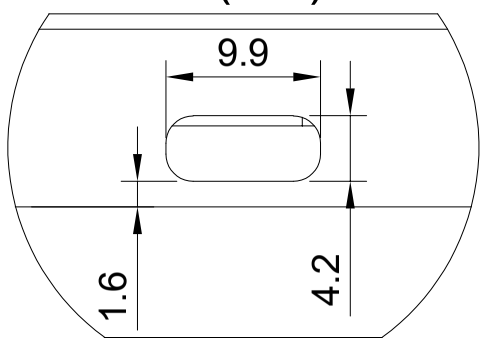

Dept.	Technical reference	Created by anchovie cat 02-Feb-25	Approved by
		Document type	Document status
		Title Shrimple case_upper	DWG No. 01
			Rev. / Date of issue / Sheet 1/2