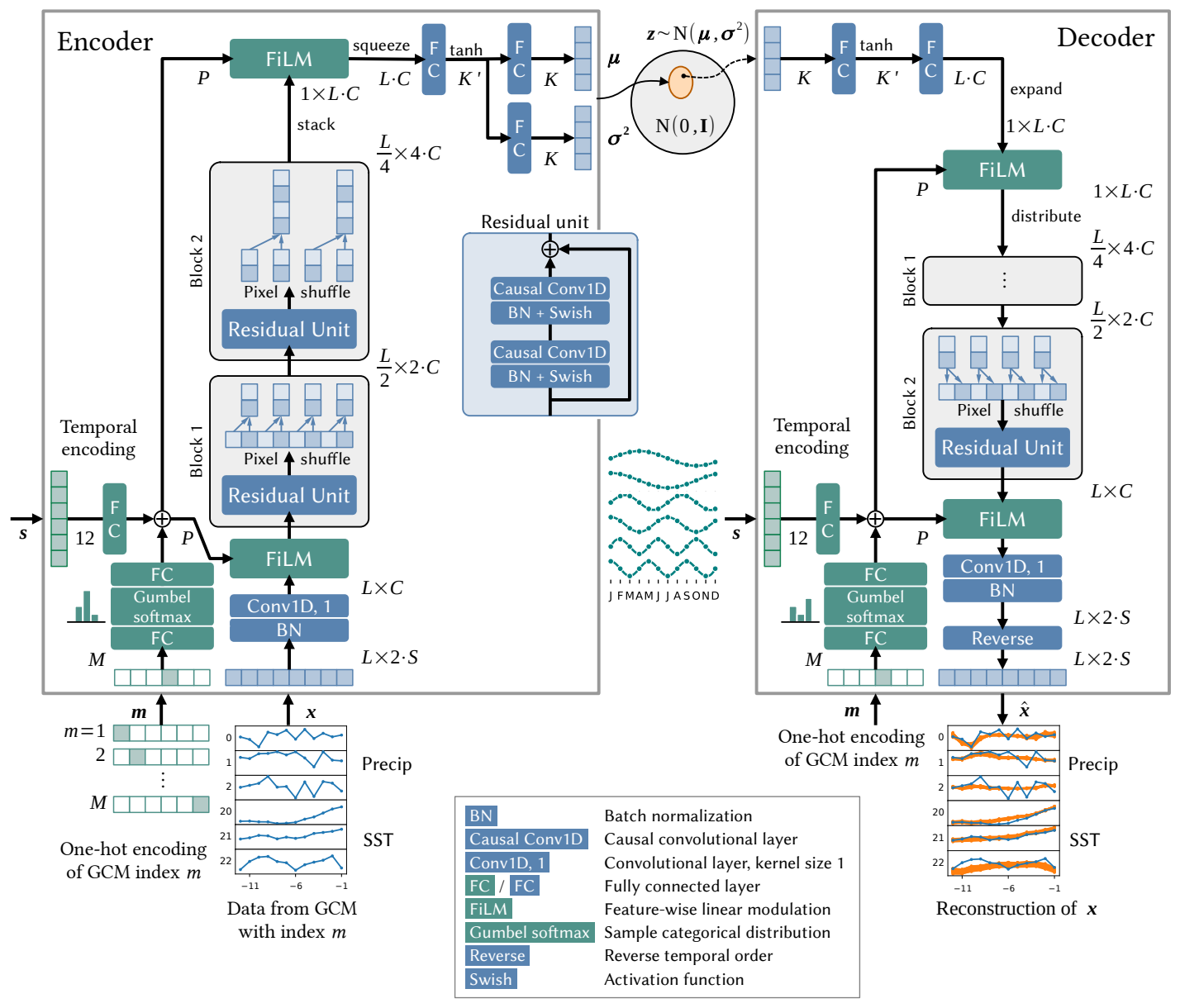
Encoder
Decoder
FiLM
squeeze
tanh
FC
stack
Pixel shuffle
Residual Unit
Block 1
Block 2
Temporal encoding
Gumbel softmax
Conv1D, 1
BN
Reverse
expand
distribute
Residual unit
Causal Conv1D
BN + Swish
z ~ N(μ, σ²)
N(0, I)
J F M A M J J A S O N D
One-hot encoding of GCM index m
Data from GCM with index m
Reconstruction of x
Precip
SST
BN Batch normalization
Causal Conv1D Causal convolutional layer
Conv1D, 1 Convolutional layer, kernel size 1
FC / FC Fully connected layer
FiLM Feature-wise linear modulation
Gumbel softmax Sample categorical distribution
Reverse Reverse temporal order
Swish Activation function