ULTRASONIC OBSTACLE AVOIDING ROBOT USING 8051

REPORT

Andrea. A

TABLE OF CONTENTS

S.No	Subtopic
1	Introduction
2	Objectives
3	Working Model Block Diagram
4	Working Model Specifications
5	Working Model Photographs
6	Working Model Sequence of Operations
7	Conclusion

INTRODUCTION

This project focuses on the design and implementation of an Ultrasonic Obstacle-Avoiding Robot, using the 8051 microcontroller (AT89S52) as the central control unit, capable of making deliveries. The robot operates in two modes - manual and autonomous - which can be switched through a Bluetooth interface.

In Manual mode, it can be controlled via a smartphone application or voice commands. The built-in safety mechanisms prevent impending collisions by automatically stopping or diverting the robot when an obstacle is detected.

In Autonomous mode, the robot navigates its environment using a combination of ultrasonic and infrared sensors which provide real-time obstacle detection. The robot applies a coded “Smart Turn” algorithm to decide its path and effectively avoid obstacles. It achieves power stability through dual-battery configuration, thereby separating logic and motor circuits to eliminate electrical noise interference.

The novelty of this project mostly lies in the integration of the usage of manual remote control and its self-driving capabilities within a single platform, making it flexible and reliable. This robot has the strong potential to be useful in hospitals, particularly in aiding in the delivery of medicines and medical supplies between rooms, where autonomous navigation is vital for situations where a contact-free delivery would be safer and more efficient when it comes to patients.

OBJECTIVES

The basic aim of this project is to develop a functional obstacle-avoiding robot that in this case, can deliver medicines from one location to another autonomously within a hospital. The specific objectives are given below:

1. To design a dual-mode robotic system that supports both manual (using Bluetooth) and autonomous operations.

2. To enable wireless communication between the robot and our smartphone using a Bluetooth module (HC-05).

3. To perform obstacle detection and avoidance using ultrasonic and infrared sensors for safe navigation.

4. To make sure that power is managed reliably through a dual-battery system that isolates logic and motor power to prevent controller resets.

5. To implement intelligent decision-making using the 8051 microcontroller for path selection and movement control of the robot.

6. To demonstrate the feasibility of autonomous delivery of medicines or any light materials within a hospital environment.

WORKING MODEL BLOCK DIAGRAM

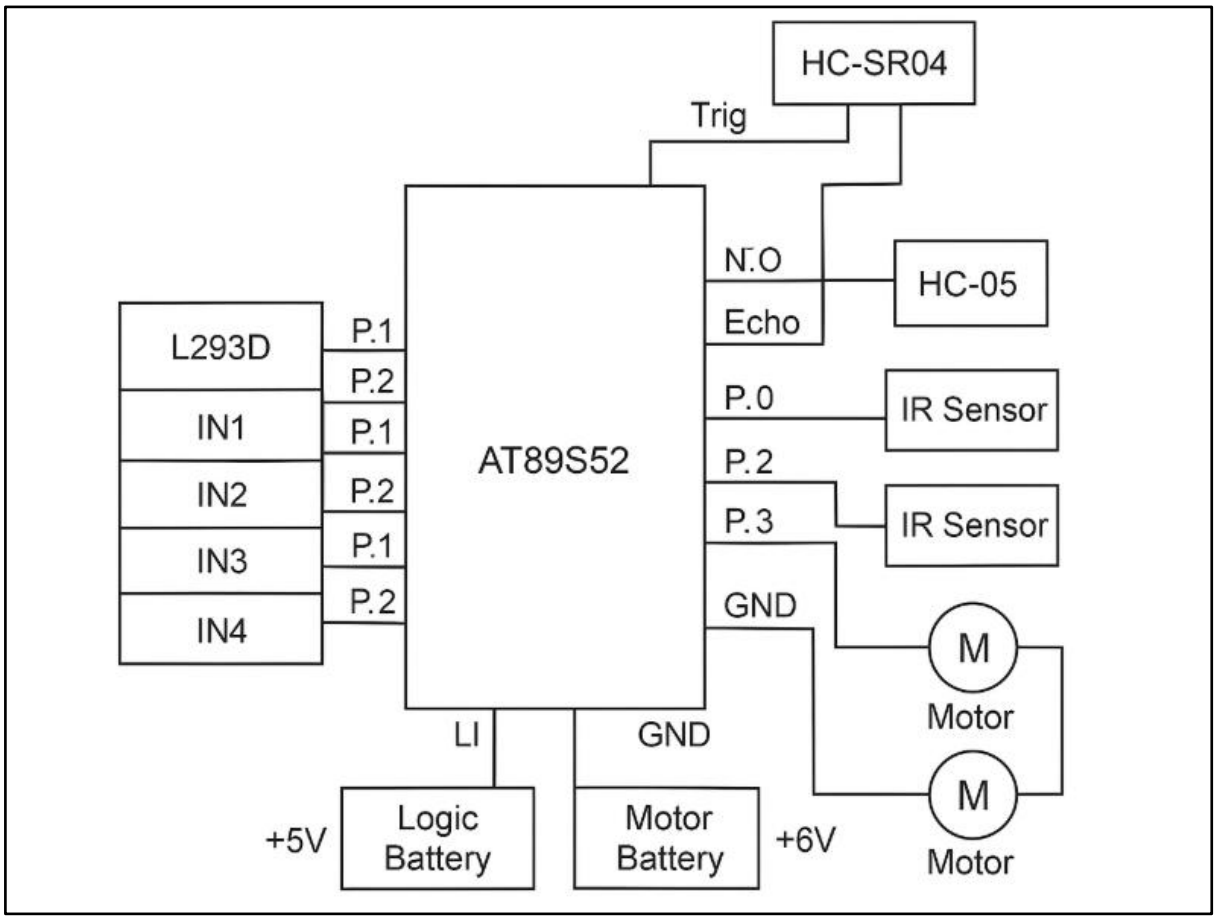

Here, AT89S52 is the number of the 8051 board used in the project, and as shown below is the basic block diagram with project components along with the pin they are connected to.

Note: Instead of 2 separate batteries and adaptor, we have alternately used a cable connected Power Bank to make the robot function.

WORKING MODEL SPECIFICATIONS

Components Used

S.No	Component Name	Quantity	Function
1	8051 (AT89S52) Microcontroller Board	1	Is the main control unit of the robot, processes input from sensors and sends control signals to the motor driver
2	L293D Motor Driver Module	1	Dual H-bridge driver IC used to control direction of movement and speed of two DC motors using control pins from 8051 board
3	HC-05 Bluetooth Module	1	Provides wireless serial communication between the robot and a smartphone / PC for manual operation
4	HC-SR04 Ultrasonic Sensor	1	Measures distance to obstacles in front of the robot for collision avoidance (range 2 to 400 cm)
5	IR Obstacle Detection Sensor Module	2	Detects obstacles on left and right sides, helps in edge or wall detection
6	DC Geared Motor (6–12 V, 100 RPM)	2	Drives the robot's wheels; direction controlled through the L293D module
7	Robot Chassis with Caster Wheel	1	Physical frame that supports motors, breadboard, sensors, and control circuitry of robot
8	9 V Battery (Common Power Source)	1	Powers both logic circuit and motor driver; output regulated to 5 V for control electronics

9	Robot Wheels (Rubber/Plastic)	2	Coupled to DC motors for robot movement
10	Breadboard (Medium Size)	1	Used for circuit assembly and power distribution
11	Jumper Wires (Male–Male / Male–Female)	~20 to 25	Provide pin-to-pin connections between modules and the controller board
12	USB A–B Cable (Printer Type)	1	Used for programming/serial communication (if req.)
14	Miscellaneous Hardware	—	Includes screws, nuts, spacers, double-sided tape, and connectors for assembly

About the Sensors Used

Ultrasonic Sensor (HC-04) :

This is used for long-range obstacle detection. It operates on the principle of echo ranging, where the module transmits a burst of ultrasonic sound waves (typically 40 kHz) through its Trig pin. These waves reflect back from any nearby object, and the Echo pin outputs a pulse whose duration corresponds to the respective distance.
The 8051 microcontroller measures this pulse width to calculate the distance using the relation below, that helps it to detect and avoid obstacles when delivering what is required:

Distance (cm) = Time (in microseconds) / 58

IR Sensors (Left and Right)

These are short-range detectors used on the side of the robot. Each one consists of an IR LED transmitter and a photodiode receiver placed side by side. The transmitter continuously emits infrared light, and when this light reflects off a nearby surface (or obstacle) , the receiver detects it. The sensor then outputs a digital LOW or HIGH signal (depending on module type) to the microcontroller, indicating that an obstacle is present nearby.
These sensors help in close-range side obstacle detection and they enable the robot to make “smart turns” and prevent collisions during both manual and autonomous modes of operation.

WORKING MODEL PHOTOGRAPHS

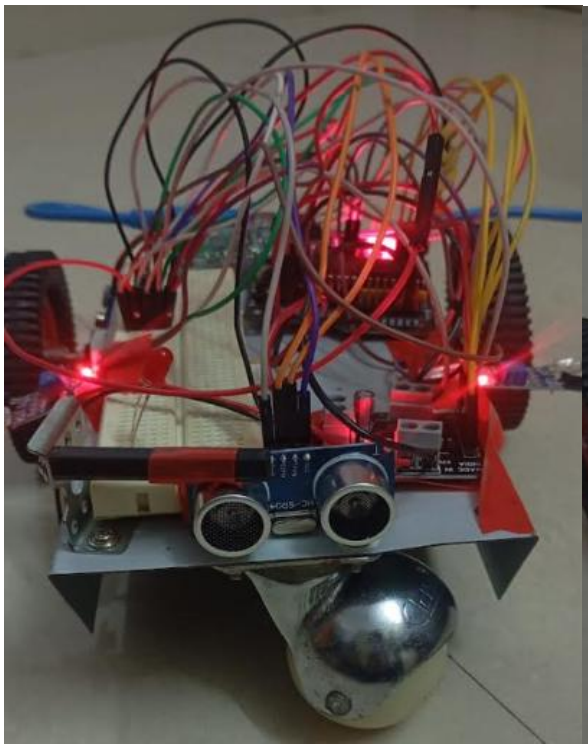

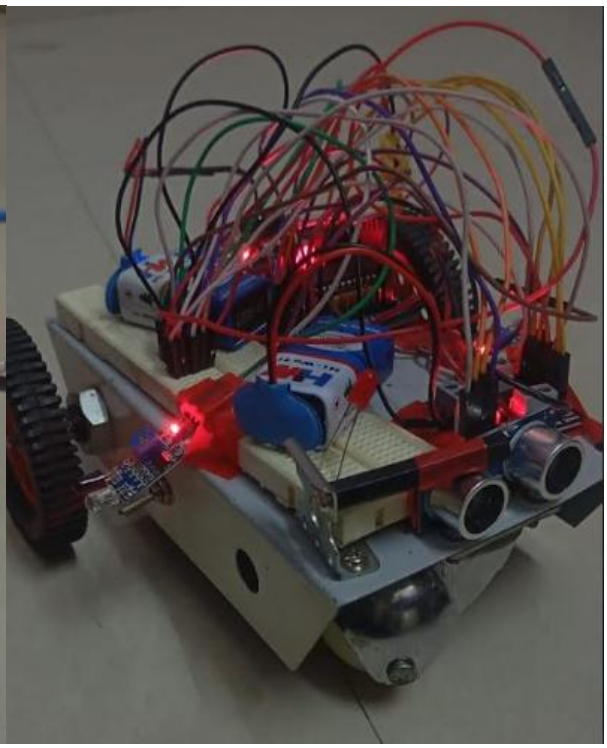

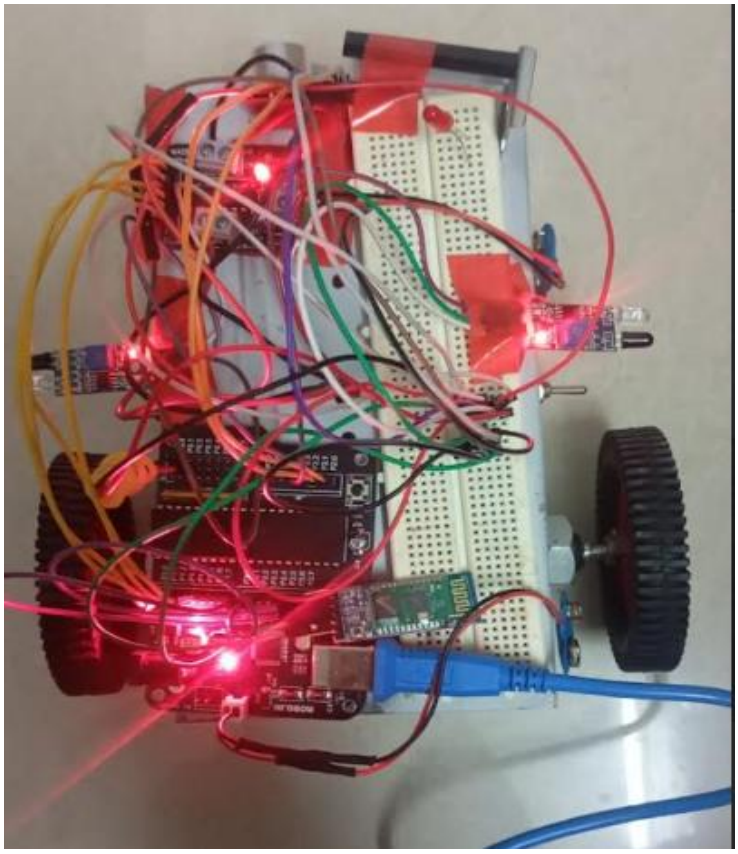

WORKING MODEL SEQUENCE OF OPERATIONS

Theory behind Operation Sequence

Part 1: The Brain (8051 - AT89S52)

The AT89S52 microcontroller is the single, central processor for all logic and/or control of the robot. It runs a continuous while(1) loop that, with every cycle, does the following:

- Reads all sensor data (Ultrasonic and both IR sensors).
- Checks if the system is in "Autonomous" or "Manual" mode.
- Executes the correct logic (either following its own path or responding to the user's last command depending on mode type).
- Waits for a brief delay to ensure stability.

Part 2: Communication (with Bluetooth & Serial Interrupt)

The robot's "remote control" is achieved using an HC-05 Bluetooth module. This module acts as a simple wire replacement when needed.

- The HC-05 is connected to the 8051's built-in Serial Port (UART) at pins P3.0 (RXD) and P3.1 (TXD).
- The 8051's Timer 1 is configured (with TH1 = 0xFD) to operate the serial port at a 9600 baud rate, the default speed for the HC-05.
- To prevent the robot from "freezing" while waiting for a command, a Serial Interrupt (Interrupt 4) is used. This allows the 8051 to run its main loop (driving, avoiding obstacles) while the serial port continues “listening” in the background. When a new character (like 'f' or 'a') arrives from the phone (or connected device used) , the interrupt triggers, updates the bt_cmd variable, and then returns control to the main loop, which then acts on that new command.

Part 3: Power (The Dual-Battery System)

This is the most critical part of the robot's stability.

- Logic Power (Brain): A 9V battery connects to the 8051 board's DC Jack. This is fed into a voltage adaptor cable connected to the system, which provides a clean, stable +5V output. This powers the 8051 chip, HC-05, all sensors, and the L293D's logic chip.
- Motor Power (Muscles): Another 9V battery connects *only* to the 12V and GND screw terminals on the L293D module.
- Common Ground (The Key): To prevent the 8051 from crashing when the motors start, the two power circuits must share a common "0V" reference. A single "Common Ground" wire is connected from the 8051's "Logic Ground" to the L293D's "Motor Ground." This stops all resets and disconnects.

Part 4: Final Code Logic (Matching to Hardware)

The final code (V7) is "hardware-matched." During debugging, we find that the robot's physical wiring for the left motor will be connected in reverse. The code compensates for this by intentionally reversing the IN1 and IN2 logic in all motor functions (e.g., robot_MOVE_FORWARD sets IN1=0, IN2=1). This makes the software match the hardware exactly, so that a command like say “f” (Forward) results in the robot moving forward.

Operation Sequence

The robot operates in two distinct modes, switchable via Bluetooth:

1. **Manual Mode:** The robot is controlled directly by a user's smartphone (via Bluetooth serial or a voice-control app). This mode includes an intelligent "safety override" system: if the user commands the robot to move forward or turn into an obstacle, the robot will sense the danger and execute an automatic avoidance manoeuvre (backing up and pivoting) before accepting the next command.
2. **Autonomous Mode:** The robot drives itself. It uses a combination of a long-range ultrasonic sensor (for front-facing obstacles) and two short-range infrared (IR) sensors (as "whiskers" for side obstacles) to navigate its environment. It features a "Smart Turn" logic: when an obstacle is detected, it backs up, checks both left and right sides for a clear path, and then turns toward the open space.

Given below is the real-time operation sequence followed by the robot during the process of obstacle-avoidance when carrying out a delivery:

a) The 8051 board has been internally programmed with a keil code, and also has a final C code that determines its range of movement and detection of obstacles (given below this sequence).
b) The system uses two 9 V batteries to function - one connected to the motor driver (for motors) and the other to the logic circuit through the DC adapter input.
c) The 8051 microcontroller first initializes its I/O ports and UART communication.
d) The HC-05 Bluetooth module is paired with a smartphone to receive movement commands (for manual mode).
e) The L293D motor driver receives control signals from the microcontroller to drive the DC motors forward, backward, left, or right based on the Bluetooth input.

f) The ultrasonic sensor (HC - 04) in front continuously measures the distance to obstacles ahead.
g) The left and right IR sensors detect objects or edges on their respective sides/directions.
h) When an obstacle is detected in front, the robot stops, reverses slightly, and turns toward the direction with more clearance than the direction it was previously going towards.
i) The robot resumes forward motion once its path is clear of obstacles.
j) All these functions are executed in an infinite loop under the control of the AT89S52 (8051) microcontroller.
k) The system can operate and perform delivery in both manual (Bluetooth) and autonomous modes depending on the program logic and situation

Steps to Upload Code to 8051(AT89S52) Board

Step 1: Gathering req. Materials

- AT89S52 development board (with in-built USB programmer)
- USB A-to-B cable
- Computer with ProgISP installed
- Compiled .hex file from Keil µVision
- Power source (9 V adapter or USB supply)

Step 2: Board Set-up

- Connect the board to the PC using the USB A-to-B cable.
- Power LED should glow.
- Install the USBasp driver if the board isn't detected automatically.
- Keep the board's jumper in the PROG position.

Step 3: Open ProgISP

- Launch ProgISP.exe.
- Select AT89S52 under *Chip*.
- Choose USBasp under *Programmer* and click Connect.
- Status will show *Connected Successfully*.

Step 4: Load program

- Click Load Flash and open the required .hex file we have written the robot functions in.
- The file path appears in the Flash input box. Choose it.

Step 5: Burn the code

- Click Erase and wait for *Chip Erase OK*.
- Click Program and wait for *Verify OK* / *Program Successful*.
- The code is now written to the microcontroller.

Step 6: Run the robot

- Close ProgISP and disconnect the USB cable.
- Move the jumper to the RUN position.

- Power the board from the robot's supply (9 V or the dual-battery setup in this case).
- The controller starts executing the uploaded code — the robot should now respond to commands or switch to autonomous mode.

If we run into any issues when uploading the code, possible issues and their fixes are listed below:

"Chip not detected" - Reinstall the USBasp driver or reconnect cable

"Verify error" - We need to ensure stable power and USB connection

Robot not moving - Jumper might still be in PROG mode, change to RUN mode

Bluetooth not responding - Check for 9600 bps baud rate in both app and code

CONCLUSION

We can conclude that the project demonstrates the working of an ultrasonic obstacle-avoiding robot (capable of both manual and autonomous operation) using the 8051 microcontroller. The integration of Bluetooth-based control, obstacle detection, and smart navigation makes it highly useful for real-time movement and path correction.
A robot like this could be further developed if needed for practical usage in hospitals to deliver medicines or small items from one room to another, reducing human staff workload and ensuring timely, contact-less delivery, making it safer overall. Thus, we can see that this project highlights how simple embedded systems with 8051 and sensors can be applied to simple yet vital delivery tasks in everyday environments.

REFERENCES

- HTTPS://WWW.SCRIBD.COM/DOC/191621939/MICRO-CONTROLLER-8051-BASED-OBSTACLE-AVOIDER-ROBOT
- HTTPS://NEVONPROJECTS.COM/OBSTACLE-AVOIDER-ROBOTIC-VEHICLE-PROJECT/
- HTTPS://1000PROJECTS.ORG/OBSTACLE-AVOIDING-ROBOT-USING-8051-PROJECT.HTML
- HTTPS://IJIREEICE.COM/WP-CONTENT/UPLOADS/2021/06/IJIREEICE.2021.9538.PDF
- HTTPS://CIRCUITDIGEST.COM/MICROCONTROLLER-PROJECTS/EDGE-AVOIDING-ROBOT-USING-8051
- HTTPS://WWW.LEARNELECTRONICSINDIA.COM/POST/OBSTACLE-DETECTION-SYSTEM-USING-8051-MICROCONTROLLER
- HTTPS://WWW.SLIDESHARE.NET/SLIDESHOW/OBSTACLE-AVOIDING-ROBOT-USING-MICRO-CONTROLLER/80443670