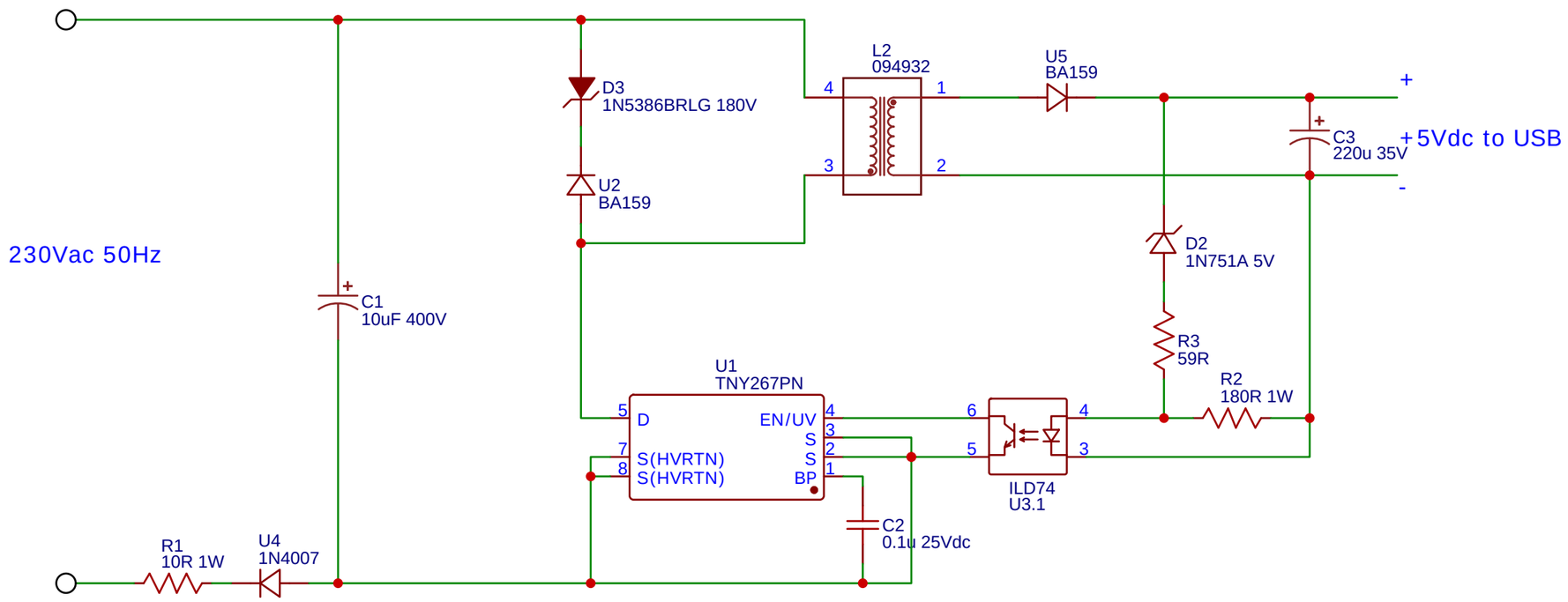

TITLE: 230Vac-5Vdc Charger		REV: 1.0
EasyEDA	Company: UnNatural	Sheet: 1/1
	Date: 2023-11-10 Drawn By: andreafato	