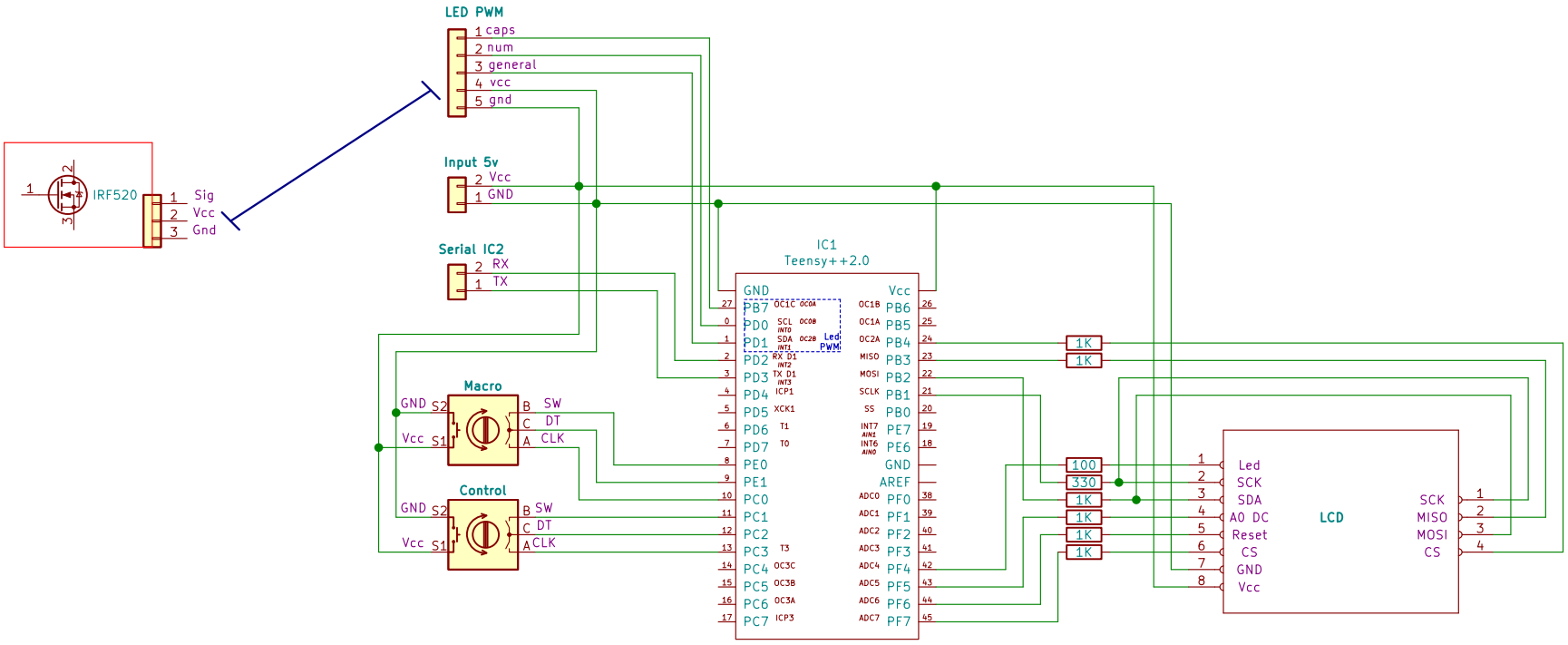

2 Rotary Encoders
LCD TFT Display (with SD Card reader)
Teensy++ 2.0
Ben

Sheet: 1/1
File: Controller.sch

Title: Keyboard Controller

Size: A4	Date: 2020	**Rev: 1.1**
KiCad E.D.A. eeschema 5.1.6		Id: 1/1