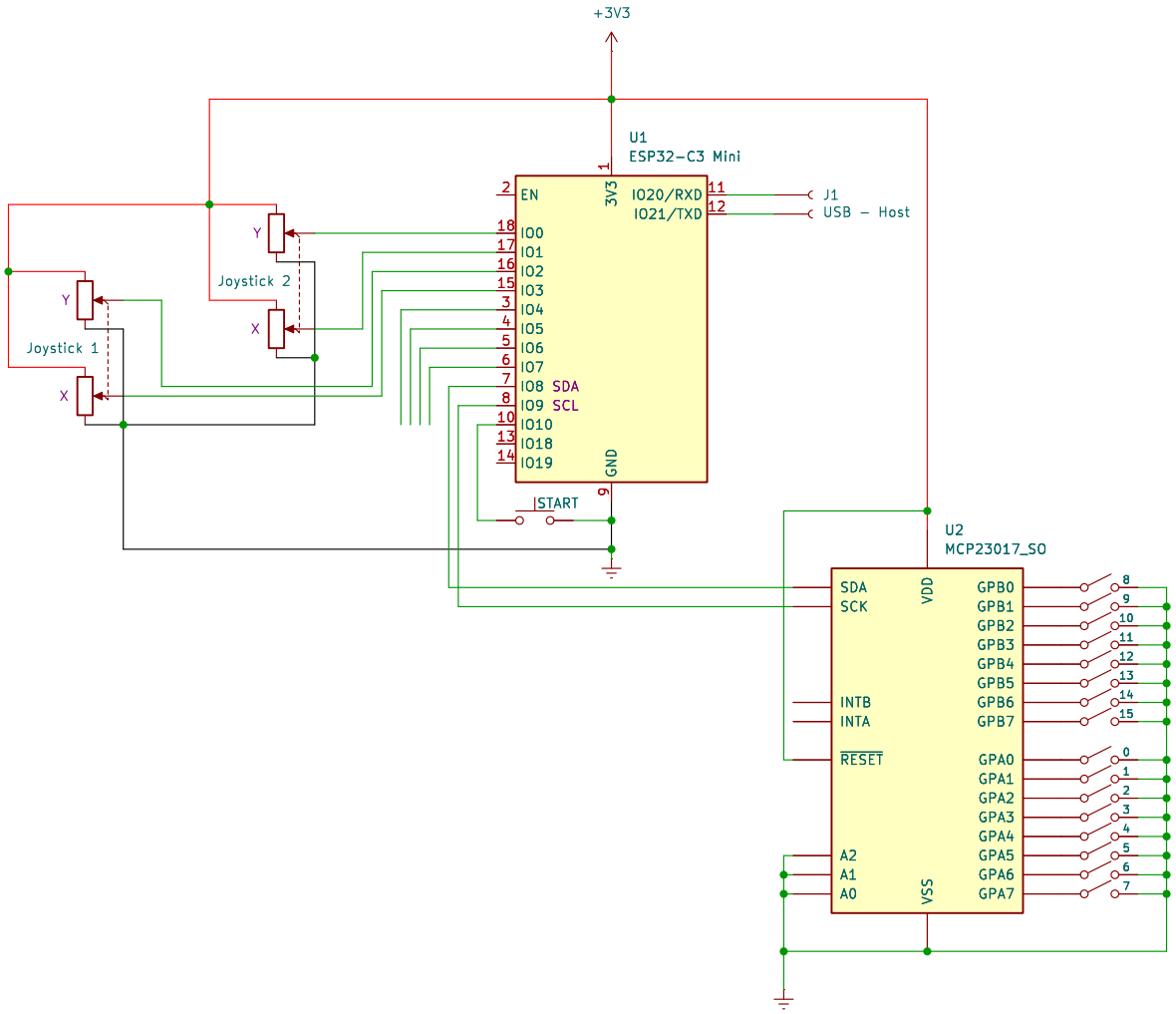

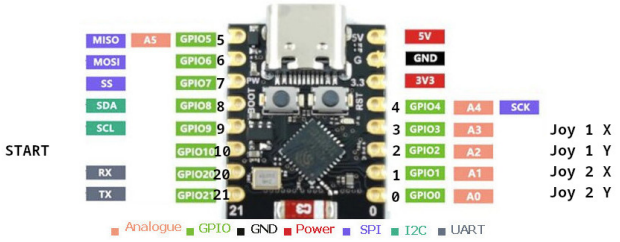

Basic schematics for controlpad controller

Andrea Benini

Sheet: /
File: controlpad.kicad_sch

Title: Controlpad Schematics

Size: A4	Date: 2025-02-09	**Rev: 1.0**
KiCad E.D.A. 9.0.0		Id: 1/1