Finite-strain Poynting-Thomson model: Existence and linearization

Andrea Chiesa

Joint work with Martin Kružík (Czech Academy of Sciences) and Ulisse Stefanelli (University of Vienna)

Kyoto University Applied Mathematics Seminar (KUAMS)

18/04/2023

universität wien

SFB PDE Taming Complexity in Partial Differential Systems

Vienna School of Mathematics

Outline

- Preliminaries
  - Assumptions
  - Energy and Dissipation
- Existence
- Linearization

What's our problem?

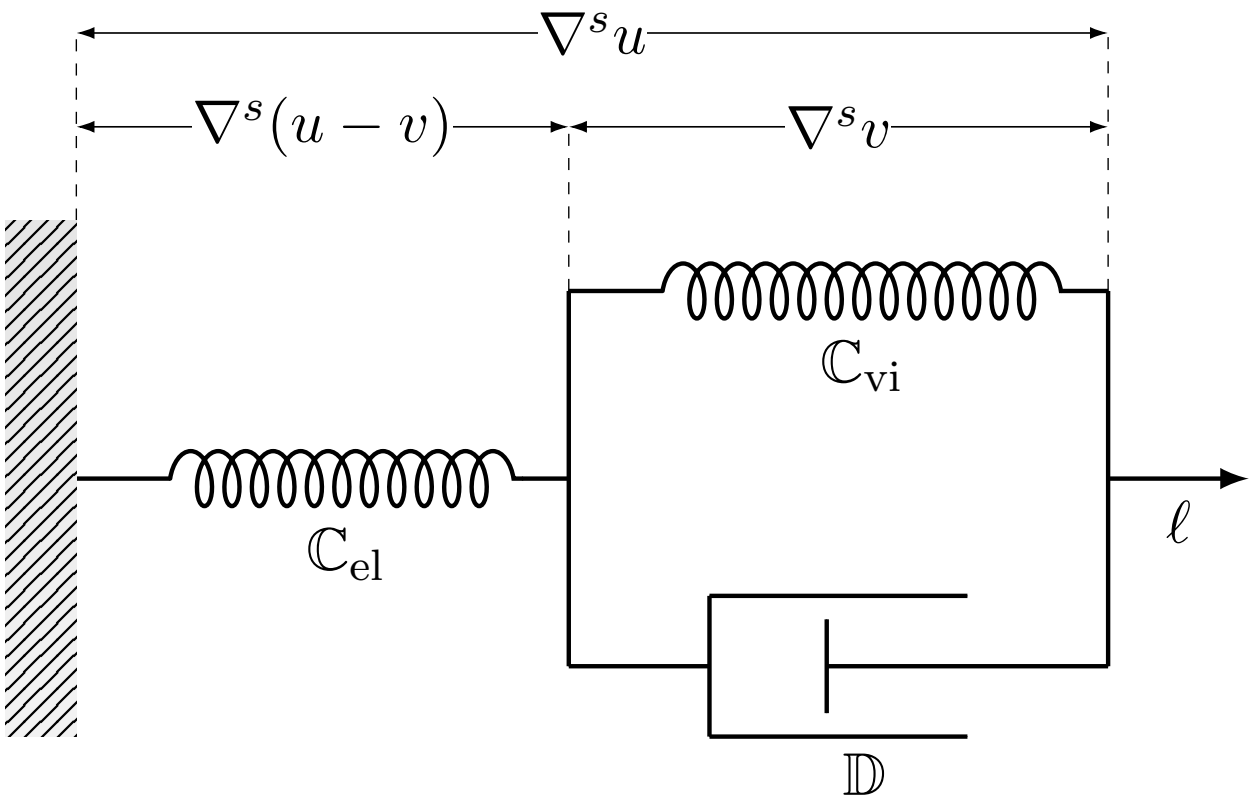

$$\begin{cases} -\operatorname{div}\left(\mathbb{C}_{\mathrm{el}} \nabla (u - v)\right) = \ell & \text{in } \Omega \\ -\operatorname{div}\left(\mathbb{D} \nabla \dot{v} + \mathbb{C}_{\mathrm{vi}} \nabla v\right) = \ell & \text{in } \Omega \end{cases}$$

Preliminaries

Domains and Deformations

$\Omega \subset \mathbb{R}^d$ non empty, Lipschitz domain

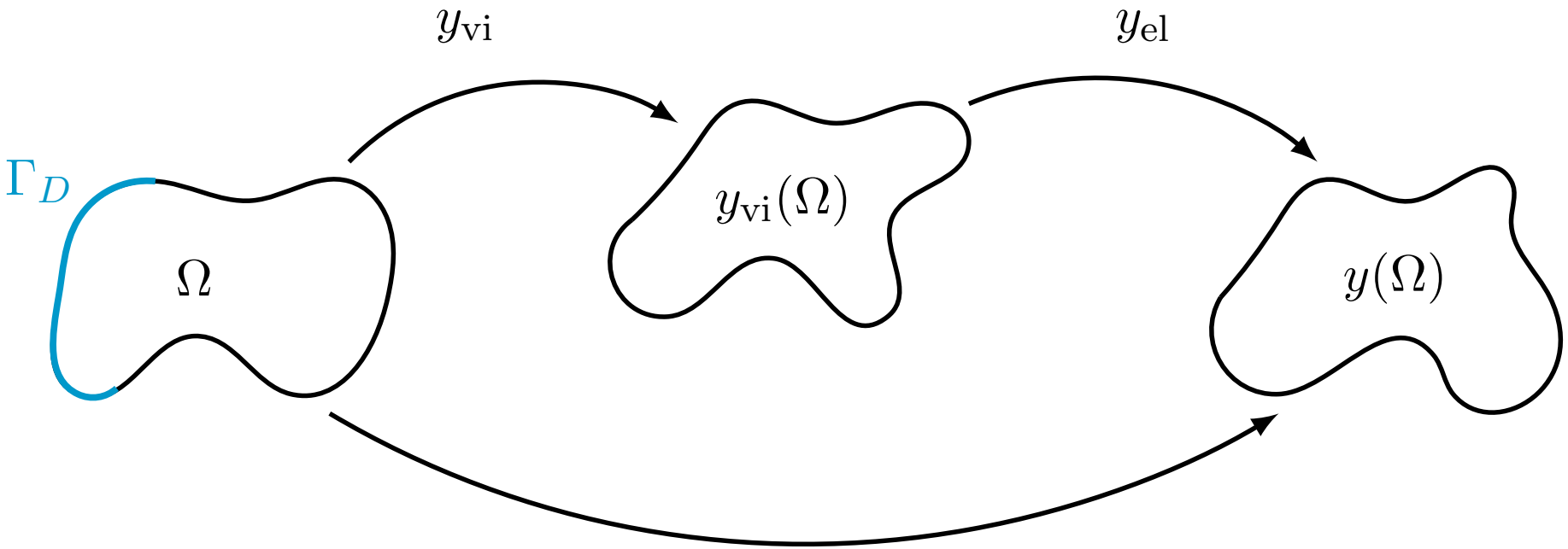

$$y = y_{\mathrm{el}} \circ y_{\mathrm{vi}}$$

Domains and Deformations

$\Omega \subset \mathbb{R}^d$ non empty, Lipschitz domain

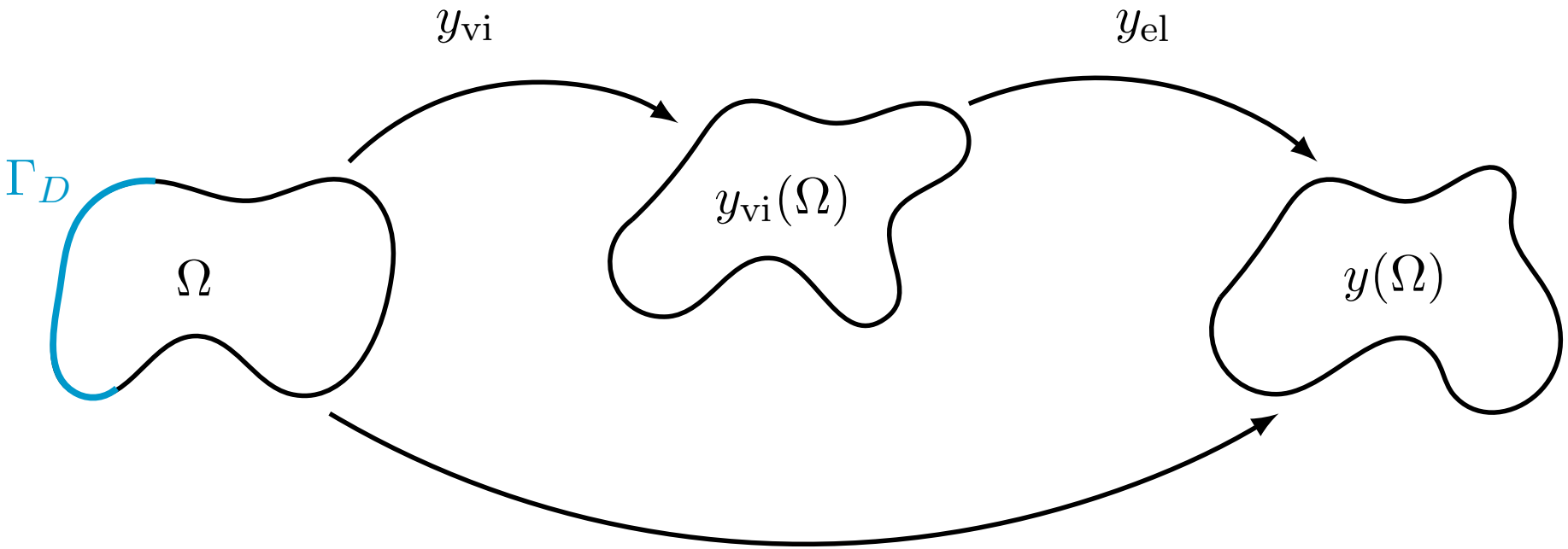

$$y = y_{\mathrm{el}} \circ y_{\mathrm{vi}}$$

$$\nabla y = F_{\mathrm{el}} F_{\mathrm{vi}}$$

Domains and Deformations

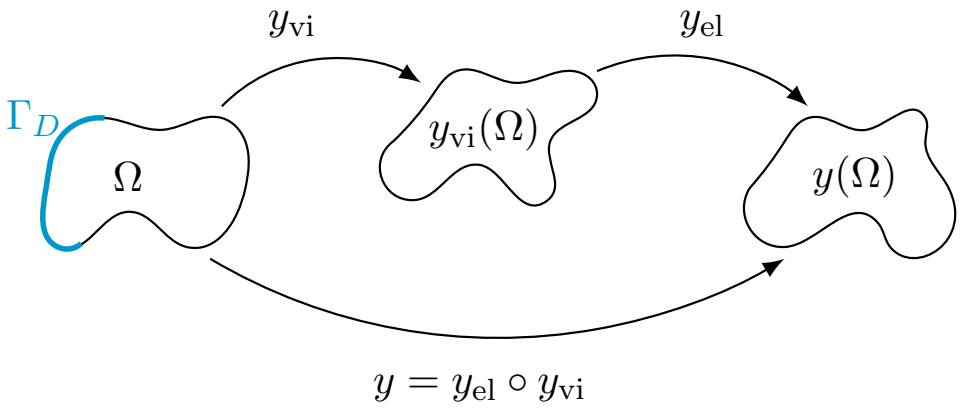

- $y_{\mathrm{vi}}(\Omega) \longrightarrow$ some regularity required:

Domains and Deformations

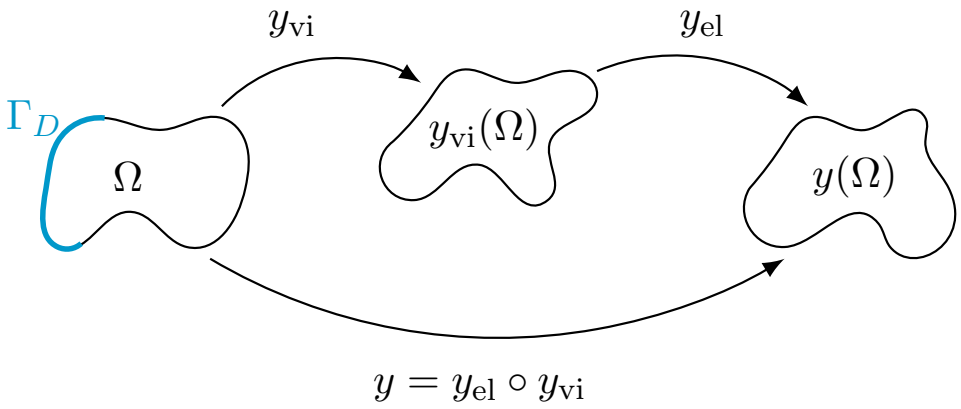

- $y_{\mathrm{vi}}(\Omega) \longrightarrow$ some regularity required:
  - Sobolev extension domains
  - closed under Hausdorff convergence (e.g. uniformly Lipschitz)

Domains and Deformations

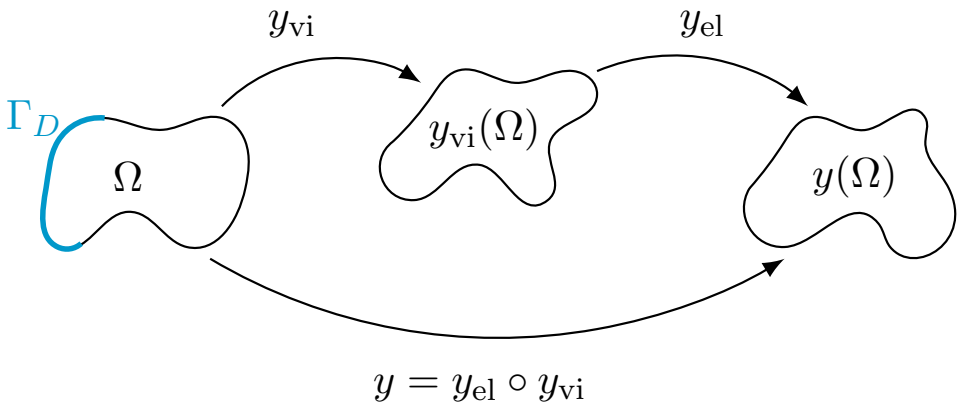

- $y_{\mathrm{vi}}(\Omega) \longrightarrow$ some regularity required:
  - Sobolev extension domains
  - closed under Hausdorff convergence (e.g. uniformly Lipschitz)

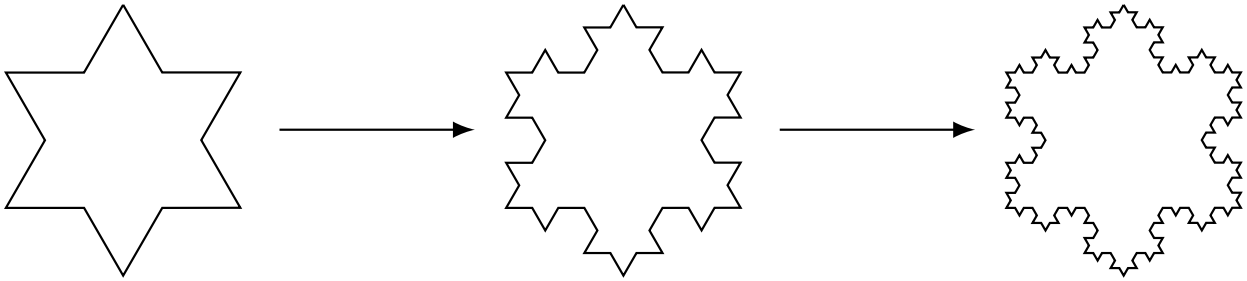

Admissible States

- y_{vi} viscous deformation:
  - $y_{\mathrm{vi}} \in W^{1,p_{\mathrm{vi}}}(\Omega;\mathbb{R}^d), \quad p_{\mathrm{vi}} > d(d-1)$
  - $\det \nabla y_{\mathrm{vi}} = 1$ a.e. in Ω (locally volume preserving)

Admissible States

- y_{vi} viscous deformation:
  - $y_{\mathrm{vi}} \in W^{1,p_{\mathrm{vi}}}(\Omega;\mathbb{R}^d), \quad p_{\mathrm{vi}} > d(d-1)$
  - $\det \nabla y_{\mathrm{vi}} = 1$ a.e. in Ω (locally volume preserving)

disappears in
change of variable

Admissible States

- y_{vi} viscous deformation:
  - $y_{\mathrm{vi}} \in W^{1,p_{\mathrm{vi}}}(\Omega;\mathbb{R}^d), \quad p_{\mathrm{vi}} > d(d-1)$
  - $\det \nabla y_{\mathrm{vi}} = 1$ a.e. in Ω (locally volume preserving)

$$\Downarrow$$

  - y_{vi} homeomorphism ($\Rightarrow$ invertible)
  - chain rule: $\nabla y(X) = \nabla y_{\mathrm{el}}(y_{\mathrm{vi}}(X))\nabla y_{\mathrm{vi}}(X)$

Admissible States

- y_{vi} viscous deformation:
  - $y_{\mathrm{vi}} \in W^{1,p_{\mathrm{vi}}}(\Omega;\mathbb{R}^d), \quad p_{\mathrm{vi}} > d(d-1)$
  - $\det \nabla y_{\mathrm{vi}} = 1$ a.e. in Ω (locally volume preserving)

$$\Downarrow$$

  - y_{vi} homeomorphism ($\Rightarrow$ invertible)
  - chain rule: $\nabla y(X) = \nabla y_{\mathrm{el}}(y_{\mathrm{vi}}(X))\nabla y_{\mathrm{vi}}(X)$

$$\nabla y = F_{\mathrm{el}} F_{\mathrm{vi}}$$

Admissible states

$$\mathcal{A} := \Bigg\{ (y_{\mathrm{el}}, y_{\mathrm{vi}}) \in W^{1,p_{\mathrm{el}}}(y_{\mathrm{vi}}(\Omega); \mathbb{R}^d) \times W^{1,p_{\mathrm{vi}}}(\Omega; \mathbb{R}^d) \;\Bigg|$$

$$\det \nabla y_{\mathrm{vi}} = 1 \text{ a.e. in } \Omega, \int_\Omega y_{\mathrm{vi}} \,\mathrm{d}X = 0, \; |\Omega| = |y_{\mathrm{vi}}(\Omega)|,$$

$$y_{\mathrm{vi}}(\Omega) \in \mathcal{J}_{\eta_1,\eta_2}, \; y = y_{\mathrm{el}} \circ y_{\mathrm{vi}} = \mathrm{id} \text{ on } \Gamma_D \Bigg\}.$$

Energy

Total energy of the system:

$$\mathcal{E}(t, y_{\mathrm{el}}, y_{\mathrm{vi}}) := \underbrace{\mathcal{W}(y_{\mathrm{el}}, y_{\mathrm{vi}})}_{\text{Stored energy}} - \underbrace{\langle \ell(t), y_{\mathrm{el}} \circ y_{\mathrm{vi}} \rangle}_{\text{work of external actions}}$$

Energy

Total energy of the system:

$$\mathcal{E}(t, y_{\mathrm{el}}, y_{\mathrm{vi}}) := \underbrace{\mathcal{W}(y_{\mathrm{el}}, y_{\mathrm{vi}})}_{\text{Stored energy}} - \underbrace{\langle \ell(t), y_{\mathrm{el}} \circ y_{\mathrm{vi}} \rangle}_{\substack{\text{work of external actions} \\ \ell \in W^{1,\infty}(0,T;(W^{1,q}(\Omega;\mathbb{R}^d))^*)}}$$

Energy

Total energy of the system:

$$\mathcal{E}(t, y_{\mathrm{el}}, y_{\mathrm{vi}}) := \underbrace{\mathcal{W}(y_{\mathrm{el}}, y_{\mathrm{vi}})}_{\text{Stored energy}} - \underbrace{\langle \ell(t), y_{\mathrm{el}} \circ y_{\mathrm{vi}} \rangle}_{\text{work of external actions}}$$

$$\mathcal{W}(y_{\mathrm{el}}, y_{\mathrm{vi}}) = \int_{y_{\mathrm{vi}}(\Omega)} \underbrace{W_{\mathrm{el}}(\nabla y_{\mathrm{el}}(\xi))}_{\text{stored elastic energy}} \, \mathrm{d}\xi + \int_{\Omega} \underbrace{W_{\mathrm{vi}}(\nabla y_{\mathrm{vi}}(X))}_{\text{stored viscous energy}} \, \mathrm{d}X$$

Energy

Total energy of the system:

$$\mathcal{E}(t, y_{\mathrm{el}}, y_{\mathrm{vi}}) := \underbrace{\mathcal{W}(y_{\mathrm{el}}, y_{\mathrm{vi}})}_{\text{Stored energy}} - \underbrace{\langle \ell(t), y_{\mathrm{el}} \circ y_{\mathrm{vi}} \rangle}_{\text{work of external actions}}$$

$$\mathcal{W}(y_{\mathrm{el}}, y_{\mathrm{vi}}) = \int_{y_{\mathrm{vi}}(\Omega)} \underbrace{W_{\mathrm{el}}(\nabla y_{\mathrm{el}}(\xi))}_{\text{stored elastic energy}} \, \mathrm{d}\xi + \int_{\Omega} \underbrace{W_{\mathrm{vi}}(\overbrace{\nabla y_{\mathrm{vi}}(X)}^{\text{NO second gradient } \nabla^2 y_{\mathrm{vi}}})}_{\text{stored viscous energy}} \, \mathrm{d}X$$

Energy

Total energy of the system:

$$\mathcal{E}(t, y_{\mathrm{el}}, y_{\mathrm{vi}}) := \underbrace{\mathcal{W}(y_{\mathrm{el}}, y_{\mathrm{vi}})}_{\text{Stored energy}} - \underbrace{\langle \ell(t), y_{\mathrm{el}} \circ y_{\mathrm{vi}} \rangle}_{\text{work of external actions}}$$

$$\mathcal{W}(y_{\mathrm{el}}, y_{\mathrm{vi}}) = \int_{y_{\mathrm{vi}}(\Omega)} \underbrace{W_{\mathrm{el}}(\nabla y_{\mathrm{el}}(\xi))}_{\text{stored elastic energy}} \, \mathrm{d}\xi + \int_{\Omega} \underbrace{W_{\mathrm{vi}}(\nabla y_{\mathrm{vi}}(X))}_{\text{stored viscous energy}} \, \mathrm{d}X$$

- $W_{\mathrm{el}} : \mathbb{R}^{d \times d} \to \mathbb{R}$ polyconvex
- $c_1 |A|^{p_{\mathrm{el}}} \leq W_{\mathrm{el}}(A) \leq \frac{1}{c_1}(1 + |A|^{p_{\mathrm{el}}})$
- $W_{\mathrm{vi}} : \mathbb{R}^{d \times d} \to \overline{\mathbb{R}}$ polyconvex
- $W_{\mathrm{vi}}(A) \geq \begin{cases} c_2 |A|^{p_{\mathrm{vi}}} - \frac{1}{c_2} & A \in SL(d) \\ \infty & \text{otherwise} \end{cases}$

Dissipation

Istantaneous dissipation of the system:

$$\Psi(y_{\mathrm{vi}}, \dot{y}_{\mathrm{vi}}) := \int_\Omega \underbrace{\psi(\nabla \dot{y}_{\mathrm{vi}} (\nabla y_{\mathrm{vi}})^{-1})}_{\text{dissipation density}} \, \mathrm{d}X$$

Dissipation

Istantaneous dissipation of the system:

$$\Psi(y_{\mathrm{vi}}, \dot{y}_{\mathrm{vi}}) := \int_\Omega \underbrace{\psi(\nabla \dot{y}_{\mathrm{vi}} (\nabla y_{\mathrm{vi}})^{-1})}_{\text{dissipation density}} \, \mathrm{d}X$$

- $\psi : \mathbb{R}^{d\times d} \to \mathbb{R}$ convex, differentiable at 0
- $\psi(A) \geq c_3 |A|^{p_\psi}$
- $\psi(\lambda A) = |\lambda|^{p_\psi} \psi(A)$

$$\Bigg\} \rightsquigarrow \psi(A) := \frac{|A|^{p_\psi}}{p_\psi}$$

Existence

The Time Discretization Scheme

- $\Pi_\tau := \{0 = t_0 < t_1 \cdots < t_N = T\}\,, \quad t_i - t_{i-1} = \tau = T/N$

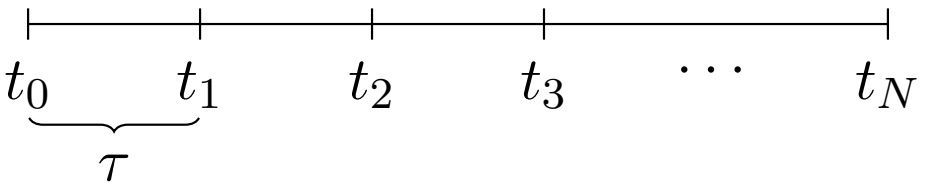

- $(y^0_{\mathrm{el}}, y^0_{\mathrm{vi}})$ compatible initial condition

The Time Discretization Scheme

- $\Pi_\tau := \{0 = t_0 < t_1 \cdots < t_N = T\}, \quad t_i - t_{i-1} = \tau = T/N$

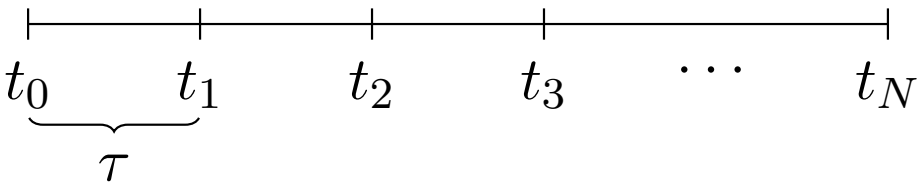

- $(y^0_{\mathrm{el}}, y^0_{\mathrm{vi}})$ compatible initial condition

Incremental minimization problem, $i = 1, \ldots, N$:

$$\inf_{(y_{\mathrm{el}}, y_{\mathrm{vi}}) \in \mathcal{A}} \left\{ \mathcal{E}(t_i, y_{\mathrm{el}}, y_{\mathrm{vi}}) + \int_\Omega \tau \psi \left(\frac{\nabla (y_{\mathrm{vi}} - y^{i-1}_{\mathrm{vi}})}{\tau} \left(\nabla y^{i-1}_{\mathrm{vi}} \right)^{-1} \right) \right\} \qquad (IP)$$

The Time Discretization Scheme

- $\Pi_\tau := \{0 = t_0 < t_1 \cdots < t_N = T\}, \quad t_i - t_{i-1} = \tau = T/N$

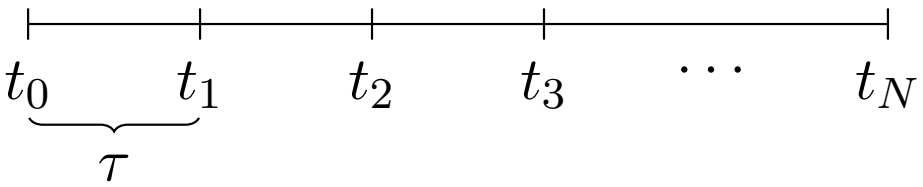

- $(y^0_{\mathrm{el}}, y^0_{\mathrm{vi}})$ compatible initial condition

Incremental minimization problem, $i = 1, \ldots, N$:

$$\inf_{(y_{\mathrm{el}}, y_{\mathrm{vi}}) \in \mathcal{A}} \left\{ \mathcal{E}(t_i, y_{\mathrm{el}}, y_{\mathrm{vi}}) + \int_\Omega \tau \psi \left(\frac{\nabla (y_{\mathrm{vi}} - y^{i-1}_{\mathrm{vi}})}{\tau} \left(\nabla y^{i-1}_{\mathrm{vi}}\right)^{-1} \right) \right\} \qquad (IP)$$

Theorem

Problem (IP) admits minimizers (not unique).

Existence Result

Theorem (C.-Kružík-Stefanelli)

Given $(y^0_{\mathrm{el}}, y^0_{\mathrm{vi}}) \in \mathcal{A}$, *for any sequence* $(\Pi_\tau)_\tau$ *of partitions of the interval* $[0,T]$ *with mesh sizes* $\tau \to 0$, *there exist a (not relabeled) subsequence and functions* $(y_{\mathrm{el}}, y_{\mathrm{vi}}) : [0,T] \to \mathcal{A}$ *such that, for a.e.* $t \in [0,T]$,

- [Approximation]

$$(\overline{y}_{\mathrm{el},\tau}(t), \overline{y}_{\mathrm{vi},\tau}(t)) \rightharpoonup (y_{\mathrm{el}}(t), y_{\mathrm{vi}}(t)) \quad \text{in } \mathcal{A},$$

- [Energy inequality]

$$\mathcal{E}(t, y_{\mathrm{el}}(t), y_{\mathrm{vi}}(t)) + p_\psi \int_0^t \Psi\left(y_{\mathrm{vi}}, \dot{y}_{\mathrm{vi}}\right) \mathrm{d}s \leq \mathcal{E}(0, y^0_{\mathrm{el}}, y^0_{\mathrm{vi}}) - \int_0^t \langle \dot{\ell}, y \rangle \mathrm{d}s,$$

- [Semistability]

$$\mathcal{E}\left(t, y_{\mathrm{el}}(t), y_{\mathrm{vi}}(t)\right) \leq \mathcal{E}\left(t, \tilde{y}_{\mathrm{el}}, y_{\mathrm{vi}}(t)\right) \quad \forall \tilde{y}_{\mathrm{el}} \text{ with } (\tilde{y}_{\mathrm{el}}, y_{\mathrm{vi}}(t)) \in \mathcal{A}.$$

“Naive” Energy Inequality

$$\mathcal{E}(t, y_{\mathrm{el}}(t), y_{\mathrm{vi}}(t)) + 1 \int_0^t \Psi\left(y_{\mathrm{vi}}, \dot{y}_{\mathrm{vi}}\right) \,\mathrm{d}s \leq \mathcal{E}(0, y_{\mathrm{el}}^0, y_{\mathrm{vi}}^0) - \int_0^t \langle \dot{\ell}, y \rangle \,\mathrm{d}s$$

“Naive” Energy Inequality

$$\mathcal{E}(t, y_{\mathrm{el}}(t), y_{\mathrm{vi}}(t)) + \int_0^t \Psi\left(y_{\mathrm{vi}}, \dot{y}_{\mathrm{vi}}\right) \mathrm{d}s \leq \mathcal{E}(0, y_{\mathrm{el}}^0, y_{\mathrm{vi}}^0) - \int_0^t \langle \dot{\ell}, y \rangle \, \mathrm{d}s$$

$$\mathcal{E}(t_i, y_{\mathrm{el}}^i, y_{\mathrm{vi}}^i) + \int_\Omega \tau \psi \left(\frac{\nabla(y_{\mathrm{vi}}^i - y_{\mathrm{vi}}^{i-1})}{\tau} \left(\nabla y_{\mathrm{vi}}^{i-1}\right)^{-1} \right) \overset{\text{min}}{\leq} \mathcal{E}(t_i, y_{\mathrm{el}}^{i-1}, y_{\mathrm{vi}}^{i-1})$$

$$= \mathcal{E}(t_{\boldsymbol{i-1}}, y_{\mathrm{el}}^{i-1}, y_{\mathrm{vi}}^{i-1}) - \int_{t_{i-1}}^{t_i} \langle \dot{\ell}, y^{i-1} \rangle$$

“Naive” Energy Inequality

$$\mathcal{E}(t, y_{\mathrm{el}}(t), y_{\mathrm{vi}}(t)) + \int_0^t \Psi\left(y_{\mathrm{vi}}, \dot{y}_{\mathrm{vi}}\right) \mathrm{d}s \leq \mathcal{E}(0, y_{\mathrm{el}}^0, y_{\mathrm{vi}}^0) - \int_0^t \langle \dot{\ell}, y \rangle \, \mathrm{d}s$$

$$\mathcal{E}(t_i, y_{\mathrm{el}}^i, y_{\mathrm{vi}}^i) + \int_\Omega \tau \psi \left(\frac{\nabla(y_{\mathrm{vi}}^i - y_{\mathrm{vi}}^{i-1})}{\tau} \left(\nabla y_{\mathrm{vi}}^{i-1}\right)^{-1} \right) \overset{\text{min}}{\leq} \mathcal{E}(t_i, y_{\mathrm{el}}^{i-1}, y_{\mathrm{vi}}^{i-1})$$

$$= \mathcal{E}(t_{\boldsymbol{i-1}}, y_{\mathrm{el}}^{i-1}, y_{\mathrm{vi}}^{i-1}) - \int_{t_{i-1}}^{t_i} \langle \dot{\ell}, y^{i-1} \rangle$$

Summing up $\Big\Downarrow \; i = 1, \ldots, n$

$$\mathcal{E}(t_n, y_{\mathrm{el}}^n, y_{\mathrm{vi}}^n) + \sum_{i=1}^n \int_\Omega \tau \psi \left(\frac{\nabla(y_{\mathrm{vi}}^i - y_{\mathrm{vi}}^{i-1})}{\tau} \left(\nabla y_{\mathrm{vi}}^{i-1}\right)^{-1} \right)$$

$$\leq \mathcal{E}(0, y_{\mathrm{el}}^0, y_{\mathrm{vi}}^0) - \sum_{i=1}^n \int_{t_{i-1}}^{t_i} \langle \dot{\ell}, y^{i-1} \rangle$$

Sharp Energy Inequality

$$\mathcal{E}(t, y_{\mathrm{el}}(t), y_{\mathrm{vi}}(t)) + p_\psi \int_0^t \Psi\left(y_{\mathrm{vi}}, \dot{y}_{\mathrm{vi}}\right) \,\mathrm{d}s \leq \mathcal{E}(0, y_{\mathrm{el}}^0, y_{\mathrm{vi}}^0) - \int_0^t \langle \dot{\ell}, y \rangle \,\mathrm{d}s$$

Sharp Energy Inequality

$$\mathcal{E}(t, y_{\mathrm{el}}(t), y_{\mathrm{vi}}(t)) + 2\int_0^t \Psi\left(y_{\mathrm{vi}}, \dot{y}_{\mathrm{vi}}\right) \mathrm{d}s \leq \mathcal{E}(0, y_{\mathrm{el}}^0, y_{\mathrm{vi}}^0) - \int_0^t \langle \dot{\ell}, y \rangle \, \mathrm{d}s$$

Sharp Energy Inequality

$$\mathcal{E}(t, y_{\mathrm{el}}(t), y_{\mathrm{vi}}(t)) + 2\int_0^t \Psi\left(y_{\mathrm{vi}}, \dot{y}_{\mathrm{vi}}\right) \mathrm{d}s \leq \mathcal{E}(0, y_{\mathrm{el}}^0, y_{\mathrm{vi}}^0) - \int_0^t \langle \dot{\ell}, y \rangle \, \mathrm{d}s$$

$$\Phi(\tau; y_{\mathrm{old}}, y_{\mathrm{el}}, y_{\mathrm{vi}}) := \mathcal{E}(t_i, y_{\mathrm{el}}, y_{\mathrm{vi}}) + \tau \Psi\left(y_{\mathrm{old}}, \frac{y_{\mathrm{vi}} - y_{\mathrm{old}}}{\tau}\right)$$

$$\phi_\tau(y_{\mathrm{old}}) := \inf_{(y_{\mathrm{el}}, y_{\mathrm{vi}}) \in \mathcal{A}} \Phi(\tau; y_{\mathrm{old}}, y_{\mathrm{el}}, y_{\mathrm{vi}})$$

Sharp Energy Inequality

$$\mathcal{E}(t, y_{\mathrm{el}}(t), y_{\mathrm{vi}}(t)) + 2\int_0^t \Psi\left(y_{\mathrm{vi}}, \dot{y}_{\mathrm{vi}}\right) \mathrm{d}s \leq \mathcal{E}(0, y_{\mathrm{el}}^0, y_{\mathrm{vi}}^0) - \int_0^t \langle \dot{\ell}, y \rangle \, \mathrm{d}s$$

$$\Phi(\tau; y_{\mathrm{old}}, y_{\mathrm{el}}, y_{\mathrm{vi}}) := \mathcal{E}(t_i, y_{\mathrm{el}}, y_{\mathrm{vi}}) + \tau \Psi\left(y_{\mathrm{old}}, \frac{y_{\mathrm{vi}} - y_{\mathrm{old}}}{\tau}\right)$$

$$\phi_\tau(y_{\mathrm{old}}) := \inf_{(y_{\mathrm{el}}, y_{\mathrm{vi}}) \in \mathcal{A}} \Phi(\tau; y_{\mathrm{old}}, y_{\mathrm{el}}, y_{\mathrm{vi}})$$

$$\boxed{\frac{\tau_0}{\tau_1} \Psi_{\tau_0}(y_{\mathrm{old}}) \leq \frac{\phi_{\tau_0}(y_{\mathrm{old}}) - \phi_{\tau_1}(y_{\mathrm{old}})}{\tau_1 - \tau_0} \leq \frac{\tau_0}{\tau_1} \Psi_{\tau_1}(y_{\mathrm{old}})}$$

Sharp Energy Inequality

$$\mathcal{E}(t, y_{\mathrm{el}}(t), y_{\mathrm{vi}}(t)) + 2\int_0^t \Psi\left(y_{\mathrm{vi}}, \dot{y}_{\mathrm{vi}}\right) \mathrm{d}s \leq \mathcal{E}(0, y_{\mathrm{el}}^0, y_{\mathrm{vi}}^0) - \int_0^t \langle \dot{\ell}, y \rangle \, \mathrm{d}s$$

$$\Phi(\tau; y_{\mathrm{old}}, y_{\mathrm{el}}, y_{\mathrm{vi}}) := \mathcal{E}(t_i, y_{\mathrm{el}}, y_{\mathrm{vi}}) + \frac{1}{2\tau} d^2(y_{\mathrm{vi}}, y_{\mathrm{old}})$$

$$\phi_\tau(y_{\mathrm{old}}) := \inf_{(y_{\mathrm{el}}, y_{\mathrm{vi}}) \in \mathcal{A}} \Phi(\tau; y_{\mathrm{old}}, y_{\mathrm{el}}, y_{\mathrm{vi}})$$

$$\boxed{\frac{\tau_0}{\tau_1} \Psi_{\tau_0}(y_{\mathrm{old}}) \leq \frac{\phi_{\tau_0}(y_{\mathrm{old}}) - \phi_{\tau_1}(y_{\mathrm{old}})}{\tau_1 - \tau_0} \leq \frac{\tau_0}{\tau_1} \Psi_{\tau_1}(y_{\mathrm{old}})}$$

Sharp Energy Inequality

$$\mathcal{E}(t, y_{\mathrm{el}}(t), y_{\mathrm{vi}}(t)) + 2\int_0^t \Psi\left(y_{\mathrm{vi}}, \dot{y}_{\mathrm{vi}}\right) \mathrm{d}s \leq \mathcal{E}(0, y_{\mathrm{el}}^0, y_{\mathrm{vi}}^0) - \int_0^t \langle \dot{\ell}, y \rangle \, \mathrm{d}s$$

$$\Phi(\tau; y_{\mathrm{old}}, y_{\mathrm{el}}, y_{\mathrm{vi}}) := \mathcal{E}(t_i, y_{\mathrm{el}}, y_{\mathrm{vi}}) + \tau \Psi\left(y_{\mathrm{old}}, \frac{y_{\mathrm{vi}} - y_{\mathrm{old}}}{\tau}\right)$$

$$\phi_\tau(y_{\mathrm{old}}) := \inf_{(y_{\mathrm{el}}, y_{\mathrm{vi}}) \in \mathcal{A}} \Phi(\tau; y_{\mathrm{old}}, y_{\mathrm{el}}, y_{\mathrm{vi}})$$

$$\boxed{\frac{\tau_0}{\tau_1} \Psi_{\tau_0}(y_{\mathrm{old}}) \leq \frac{\phi_{\tau_0}(y_{\mathrm{old}}) - \phi_{\tau_1}(y_{\mathrm{old}})}{\tau_1 - \tau_0} \leq \frac{\tau_0}{\tau_1} \Psi_{\tau_1}(y_{\mathrm{old}})}$$

Sharp Energy Inequality

$$\mathcal{E}(t, y_{\mathrm{el}}(t), y_{\mathrm{vi}}(t)) + 2\int_0^t \Psi\left(y_{\mathrm{vi}}, \dot{y}_{\mathrm{vi}}\right) \mathrm{d}s \leq \mathcal{E}(0, y_{\mathrm{el}}^0, y_{\mathrm{vi}}^0) - \int_0^t \langle \dot{\ell}, y \rangle \, \mathrm{d}s$$

$$\Phi(\tau; y_{\mathrm{old}}, y_{\mathrm{el}}, y_{\mathrm{vi}}) := \mathcal{E}(t_i, y_{\mathrm{el}}, y_{\mathrm{vi}}) + \tau \Psi\left(y_{\mathrm{old}}, \frac{y_{\mathrm{vi}} - y_{\mathrm{old}}}{\tau}\right)$$

$$\phi_\tau(y_{\mathrm{old}}) := \inf_{(y_{\mathrm{el}}, y_{\mathrm{vi}}) \in \mathcal{A}} \Phi(\tau; y_{\mathrm{old}}, y_{\mathrm{el}}, y_{\mathrm{vi}})$$

$$\boxed{\frac{\tau_0}{\tau_1} \Psi_{\tau_0}(y_{\mathrm{old}}) \leq \frac{\phi_{\tau_0}(y_{\mathrm{old}}) - \phi_{\tau_1}(y_{\mathrm{old}})}{\tau_1 - \tau_0} \leq \frac{\tau_0}{\tau_1} \Psi_{\tau_1}(y_{\mathrm{old}})}$$

$$\frac{d}{d\tau} \phi_\tau(y_{\mathrm{old}}) = -\Psi_\tau(y_{\mathrm{old}})$$

Sharp Energy Inequality

$$\mathcal{E}(t, y_{\mathrm{el}}(t), y_{\mathrm{vi}}(t)) + 2\int_0^t \Psi\left(y_{\mathrm{vi}}, \dot{y}_{\mathrm{vi}}\right) \mathrm{d}s \leq \mathcal{E}(0, y_{\mathrm{el}}^0, y_{\mathrm{vi}}^0) - \int_0^t \langle \dot{\ell}, y \rangle \, \mathrm{d}s$$

$$\Phi(\tau; y_{\mathrm{old}}, y_{\mathrm{el}}, y_{\mathrm{vi}}) := \mathcal{E}(t_i, y_{\mathrm{el}}, y_{\mathrm{vi}}) + \tau \Psi\left(y_{\mathrm{old}}, \frac{y_{\mathrm{vi}} - y_{\mathrm{old}}}{\tau}\right)$$

$$\phi_\tau(y_{\mathrm{old}}) := \inf_{(y_{\mathrm{el}}, y_{\mathrm{vi}}) \in \mathcal{A}} \Phi(\tau; y_{\mathrm{old}}, y_{\mathrm{el}}, y_{\mathrm{vi}})$$

$$\boxed{\frac{\tau_0}{\tau_1} \Psi_{\tau_0}(y_{\mathrm{old}}) \leq \frac{\phi_{\tau_0}(y_{\mathrm{old}}) - \phi_{\tau_1}(y_{\mathrm{old}})}{\tau_1 - \tau_0} \leq \frac{\tau_0}{\tau_1} \Psi_{\tau_1}(y_{\mathrm{old}})}$$

$$\frac{d}{d\tau} \phi_\tau(y_{\mathrm{old}}) = -\Psi_\tau(y_{\mathrm{old}})$$

$$\mathcal{E}(t_i, y_{\mathrm{el},\tau}, y_{\mathrm{vi},\tau}) + \tau \Psi\left(y_{\mathrm{old}}, \frac{y_{\mathrm{vi},\tau} - y_{\mathrm{old}}}{\tau}\right) - \mathcal{E}(t_i, y_{\mathrm{el}}, y_{\mathrm{old}}) = -\int_0^\tau \Psi_r(y_{\mathrm{old}}) \, \mathrm{d}r$$

Existence Result

Theorem (C.-Kružík-Stefanelli)

Given $(y^0_{\mathrm{el}}, y^0_{\mathrm{vi}}) \in \mathcal{A}$, *for any sequence* $(\Pi_\tau)_\tau$ *of partitions of the interval* $[0,T]$ *with mesh sizes* $\tau \to 0$, *there exist a (not relabeled) subsequence and functions* $(y_{\mathrm{el}}, y_{\mathrm{vi}}) : [0,T] \to \mathcal{A}$ *such that, for a.e.* $t \in [0,T]$,

- [Approximation]

$$(\overline{y}_{\mathrm{el},\tau}(t), \overline{y}_{\mathrm{vi},\tau}(t)) \rightharpoonup (y_{\mathrm{el}}(t), y_{\mathrm{vi}}(t)) \quad \text{in } \mathcal{A},$$

- [Energy inequality]

$$\mathcal{E}(t, y_{\mathrm{el}}(t), y_{\mathrm{vi}}(t)) + p_\psi \int_0^t \Psi\left(y_{\mathrm{vi}}, \dot{y}_{\mathrm{vi}}\right) \mathrm{d}s \leq \mathcal{E}(0, y^0_{\mathrm{el}}, y^0_{\mathrm{vi}}) - \int_0^t \langle \dot{\ell}, y \rangle \mathrm{d}s,$$

- [Semistability]

$$\mathcal{E}\left(t, y_{\mathrm{el}}(t), y_{\mathrm{vi}}(t)\right) \leq \mathcal{E}\left(t, \tilde{y}_{\mathrm{el}}, y_{\mathrm{vi}}(t)\right) \quad \forall \tilde{y}_{\mathrm{el}} \text{ with } (\tilde{y}_{\mathrm{el}}, y_{\mathrm{vi}}(t)) \in \mathcal{A}.$$

The role of Approximability

Approximability ensures that viscous evolution occurs:

constant-in-time y_{vi} $\rightsquigarrow$

- ✓ energy inequality
- ✓ semistability
- × limit of discrete solutions

The role of Approximability

Approximability ensures that viscous evolution occurs:

constant-in-time y_{vi} $\rightsquigarrow$

- ✓ energy inequality
- ✓ semistability
- × limit of discrete solutions

$$\min_{F\in\mathbb{R},F_{\mathrm{vi}}>0}\left(\frac{1}{2}\left|FF_{\mathrm{vi}}^{-1}-1\right|^2+\frac{1}{2}|F_{\mathrm{vi}}-1|^2+\frac{1}{2\tau}\left|(F_{\mathrm{vi}}-F_{\mathrm{vi}}^{i-1})(F_{\mathrm{vi}}^{i-1})^{-1}\right|\right)$$

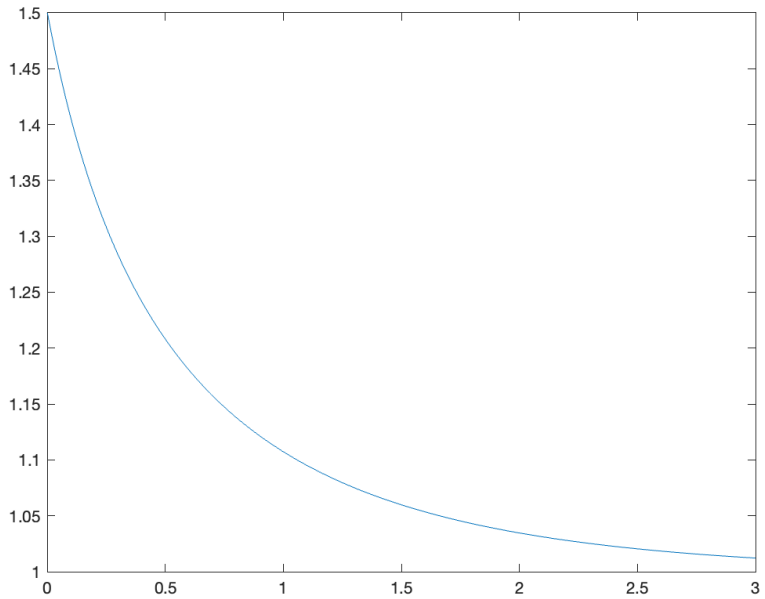

Linearization

Linearization

$$u := \frac{y - \mathrm{id}_\Omega}{\varepsilon}, \quad \text{and} \quad v := \frac{y_{\mathrm{vi}} - \mathrm{id}_\Omega}{\varepsilon}$$

Linearization

$$u := \frac{y - \mathrm{id}_\Omega}{\varepsilon}, \quad \text{and} \quad v := \frac{y_{\mathrm{vi}} - \mathrm{id}_\Omega}{\varepsilon}$$

By (formal) Taylor expansion

$$\frac{1}{\varepsilon^2}\int_\Omega W_{\mathrm{el}}\left((I+\varepsilon\nabla u)(I+\varepsilon\nabla v)^{-1}\right)\,\mathrm{d}X \to \frac{1}{2}\int_\Omega \nabla(u-v) : \mathbb{C}_{\mathrm{el}}\nabla(u-v)\,\mathrm{d}X$$

$$\frac{1}{\varepsilon^2}\int_\Omega W_{\mathrm{vi}}(I+\varepsilon\nabla v)\,\mathrm{d}X \to \frac{1}{2}\int_\Omega \nabla v : \mathbb{C}_{\mathrm{vi}}\nabla v\,\mathrm{d}X$$

$$\frac{1}{\varepsilon^2}\int_\Omega \psi\left(\varepsilon\nabla\dot{v}(I+\varepsilon\nabla v)^{-1}\right)\,\mathrm{d}X \to \frac{1}{2}\int_\Omega \nabla\dot{v} : \mathbb{D}\nabla\dot{v}\,\mathrm{d}X$$

Linearization

$$\int_\Omega \nabla(u-v) : \mathbb{C}_{\mathrm{el}} \nabla(u-v) \, \mathrm{d}X$$

$$\int_\Omega \nabla v : \mathbb{C}_{\mathrm{vi}} \nabla v \, \mathrm{d}X$$

$$\int_\Omega \nabla \dot{v} : \mathbb{D} \nabla \dot{v} \, \mathrm{d}X$$

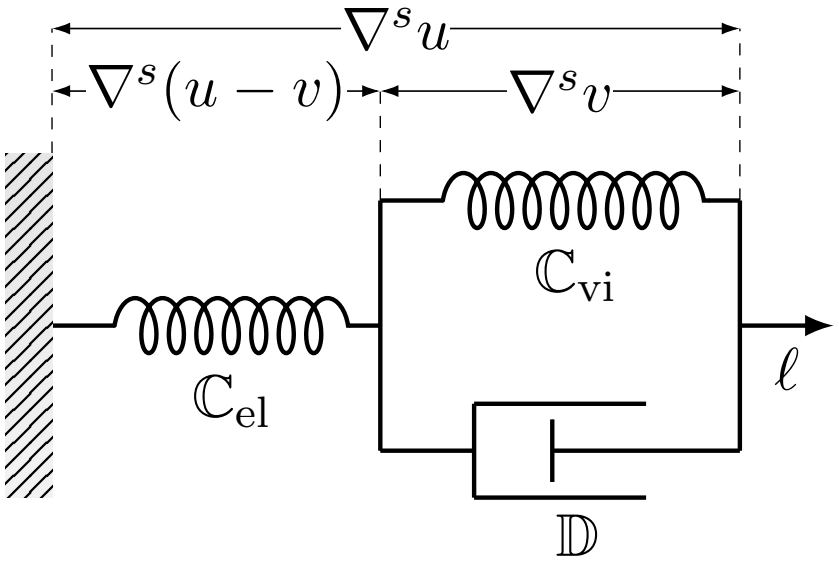

$$\begin{cases} -\operatorname{div}\left(\mathbb{C}_{\mathrm{el}} \nabla(u-v)\right) = \ell & \text{in } \Omega \\ -\operatorname{div}\left(\mathbb{D} \nabla \dot{v} + \mathbb{C}_{\mathrm{vi}} \nabla v\right) = \ell & \text{in } \Omega \end{cases}$$

Reformulation of the existence result

Corollary (C.-Kružík-Stefanelli)

Given $(u_\varepsilon^0, v_\varepsilon^0) \in \mathcal{A}^\varepsilon$*, for any sequence* $(\Pi_\tau)_\tau$ *of partitions of the interval* $[0,T]$ *with mesh sizes* $\tau \to 0$*, there exist a (not relabeled) subsequence and functions* $(u_\varepsilon, v_\varepsilon) : [0,T] \to \mathcal{A}^\varepsilon$ *such that, for a.e.* $t \in [0,T]$*,*

- [Approximation]

$$(\overline{u}_\varepsilon^\tau(t), \overline{v}_\varepsilon^\tau(t)) \rightharpoonup (u_\varepsilon(t), v_\varepsilon(t)) \quad \text{in } \mathcal{A}^\varepsilon,$$

- [Energy inequality]

$$\mathcal{E}^\varepsilon(t, u_\varepsilon(t), v_\varepsilon(t)) + p_\psi \int_0^t \Psi^\varepsilon(v_\varepsilon, \dot{v}_\varepsilon)\,\mathrm{d}s \le \mathcal{E}^\varepsilon(0, u_\varepsilon^0, v_\varepsilon^0) - \int_0^t \langle \dot{\ell}^\varepsilon, u_\varepsilon \rangle \mathrm{d}s,$$

- [Semistability]

$$\mathcal{E}^\varepsilon(t, u_\varepsilon(t), v_\varepsilon(t)) \le \mathcal{E}(t, \tilde{u}_\varepsilon, v_\varepsilon(t)) \quad \forall \tilde{u}_\varepsilon \text{ with } (\tilde{u}_\varepsilon, v_\varepsilon(t)) \in \mathcal{A}^\varepsilon.$$

Linearization result

Theorem (C.-Kružík-Stefanelli)

For every $\varepsilon > 0$ *let* $(u_\varepsilon, v_\varepsilon)$ *be an approximable solutions. Then, under suitable assumptions there exist functions* $(u, v) : [0, T] \to H^1_{\Gamma_D}(\Omega; \mathbb{R}^d) \times H^1_\sharp(\Omega; \mathbb{R}^d)$ *such that, for every* $t \in [0, T]$*, (up to a subsequence),*

$$u_\varepsilon(t) \rightharpoonup u(t),\ v_\varepsilon(t) \rightharpoonup v(t) \ \text{ weakly in } H^1(\Omega; \mathbb{R}^d),$$
$$\nabla \dot{v}_\varepsilon(t) \rightharpoonup \nabla \dot{v}(t) \ \text{ weakly in } L^2(\Omega; \mathbb{R}^{d\times d}).$$

Moreover, for every $t \in [0, T]$*, we have:*

- [Linearized energy inequality]
- [Linearized semistability]

Linearized Energy Inequality

$$
\begin{aligned}
&\frac{1}{2}\int_\Omega \nabla(u(t)-v(t)) : \mathbb{C}_{\mathrm{el}}\nabla(u(t)-v(t))\,\mathrm{d}X + \frac{1}{2}\int_\Omega \nabla v(t) : \mathbb{C}_{\mathrm{vi}}\nabla v(t)\,\mathrm{d}X \\
&\qquad - \int_\Omega \ell^0(t)\cdot u(t)\,\mathrm{d}X + \int_0^t\!\!\int_\Omega \mathbb{D}\nabla\dot{v}(s) : \nabla\dot{v}(s)\,\mathrm{d}X\,\mathrm{d}s \\
&\leq \frac{1}{2}\int_\Omega \nabla(u_0-v_0) : \mathbb{C}_{\mathrm{el}}\nabla(u_0-v_0)\,\mathrm{d}X + \frac{1}{2}\int_\Omega \nabla v_0 : \mathbb{C}_{\mathrm{vi}}\nabla v_0\,\mathrm{d}X \\
&\qquad - \int_\Omega \ell^0(0)\cdot u_0\,\mathrm{d}X - \int_0^t\!\!\int_\Omega \dot{\ell}^0(s)\cdot u(s)\,\mathrm{d}X\,\mathrm{d}s
\end{aligned}
$$

Linearized Semistability

For every $\hat{u}$ admissible

$$\frac{1}{2}\int_\Omega \nabla(u(t)-v(t)) : \mathbb{C}_{\text{el}}\nabla(u(t)-v(t))\,\mathrm{d}X - \int_\Omega \ell^0(t)\cdot u(t)\,\mathrm{d}X$$
$$\leq \frac{1}{2}\int_\Omega \nabla(\hat{u}-v(t)) : \mathbb{C}_{\text{el}}\nabla(\hat{u}-v(t))\,\mathrm{d}X - \int_\Omega \ell^0(t)\cdot \hat{u}\,\mathrm{d}X$$

Linearized Semistability

For every $\hat{u}$ admissible

$$\frac{1}{2}\int_\Omega \nabla(u(t)-v(t)) : \mathbb{C}_{\text{el}}\nabla(u(t)-v(t))\,\mathrm{d}X - \int_\Omega \ell^0(t)\cdot u(t)\,\mathrm{d}X$$
$$\leq \frac{1}{2}\int_\Omega \nabla(\hat{u}-v(t)) : \mathbb{C}_{\text{el}}\nabla(\hat{u}-v(t))\,\mathrm{d}X - \int_\Omega \ell^0(t)\cdot \hat{u}\,\mathrm{d}X$$

Uniqueness?

Linearized Semistability

For every $\hat{u}$ admissible

$$\frac{1}{2}\int_\Omega \nabla(u(t)-v(t)) : \mathbb{C}_{\text{el}}\nabla(u(t)-v(t))\,\mathrm{d}X - \int_\Omega \ell^0(t)\cdot u(t)\,\mathrm{d}X$$
$$\leq \frac{1}{2}\int_\Omega \nabla(\hat{u}-v(t)) : \mathbb{C}_{\text{el}}\nabla(\hat{u}-v(t))\,\mathrm{d}X - \int_\Omega \ell^0(t)\cdot \hat{u}\,\mathrm{d}X$$

Uniqueness?

Given v, we have that u is uniquely determined!

Weakness of the notion of solution

$$
\begin{tikzcd}
\text{minimizer of the nonlinear discrete problem} \arrow[r, phantom, "="] & (u_\varepsilon^\tau, v_\varepsilon^\tau) \arrow[rr] \arrow[dd] & & (u^\tau, v^\tau) \arrow[r, phantom, "="] \arrow[d] & \text{minimizer of the linear discrete problem} \\
& & & (\widetilde{u}, \widetilde{v}) \arrow[r, phantom, "="] \arrow[dl, dash, "\neq"] & \text{minimizer of the linear continuous problem} \\
\text{Semistability, Energy inequality, Approximability.} & (u_\varepsilon, v_\varepsilon) \arrow[l, squiggly] \arrow[r] & (u, v) \arrow[d, squiggly] & & \\
& & \text{linear Semistability, linear Energy inequality.} & &
\end{tikzcd}
$$

Conclusions

We proved

- Existence of solutions at the non-linear level
  - Energy inequality
  - Semistability
  - Approximability
- Convergence of non-linear trajectories to linear ones

Conclusions

We proved

- Existence of (weak) solutions at the non-linear level
  - Energy inequality $\rightsquigarrow$ sharp
  - Semistability $\rightsquigarrow$ y_{el} solves elastic equilibrium
  - Approximability $\rightsquigarrow$ viscous evolution occurs
- Convergence of non-linear trajectories to linear ones

But:

- No second gradients $\nabla^2 y_{\mathrm{vi}}$!
- Just assume $F = \nabla y = \nabla(y_{\mathrm{el}} \circ y_{\mathrm{vi}})$

Bibliography

Main reference:

[1] A. Chiesa, M. Kružík, U. Stefanelli, Finite-strain Poynting-Thomson model: Existence and linearization. *Preprint, arXiv:2303.10933.*

Additional references:

[2] M. Kružík, D. Melching, U. Stefanelli, Quasistatic evolution for dislocation-free finite plasticity. *ESAIM Control Optim. Calc. Var.* 26 (2020), Paper No. 123.

[3] M. Kružík, T. Roubíček, *Mathematical methods in continuum mechanics of solids*, Interaction of Mechanics and Mathematics, Springer, Cham, 2019.

[4] A. Mielke, U. Stefanelli, Linearized plasticity is the evolutionary Γ-limit of finite plasticity. *J. Eur. Math. Soc. (JEMS)*, 15 (2013), no. 3, pp. 923–948.

Thank you for your attention!