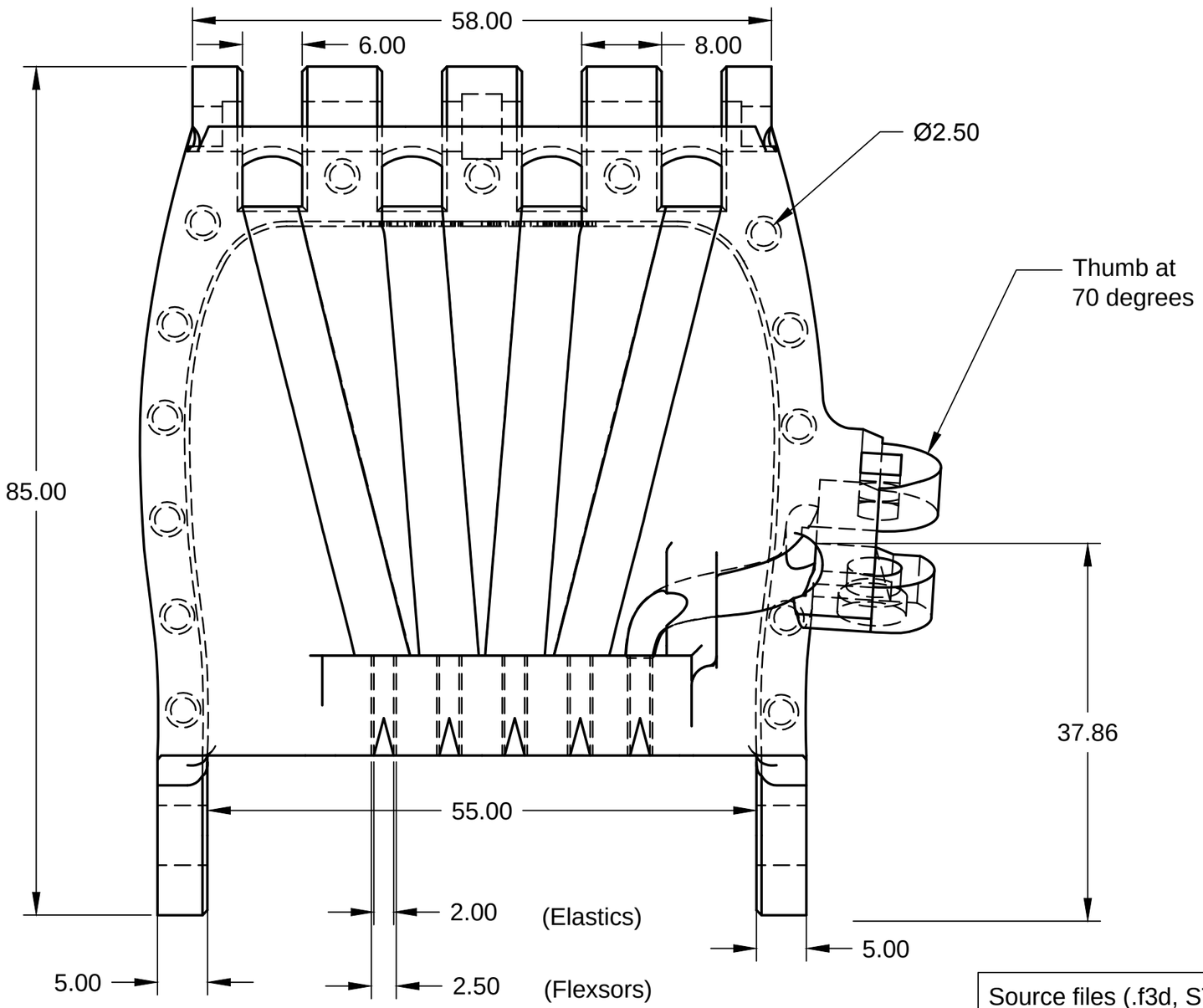

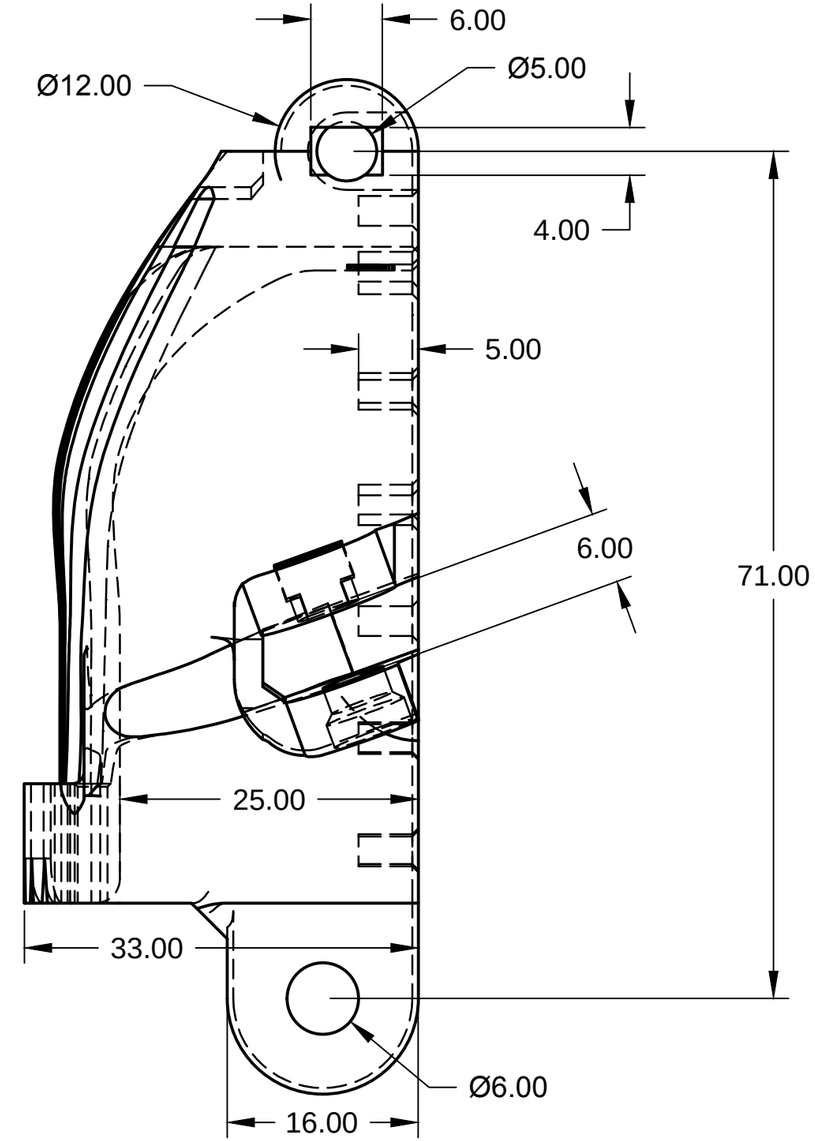

Source files (.f3d, STEP, IGES) available in the e-NABLE Fusion 360 project.

PROJECT	Parametric Raptor
TITLE	Primary Mechanical Interface Dimensions

APPROVED	SIZE	CODE	DWG NO	REV
CHECKED				
DRAWN	SCALE	WEIGHT	SHEET	