This document and all information and data herein or herewith are confedencial and propriertary property of<COMPANY NAME> and are not to be used, reproduced or disclosed in whole or in part by anyone without the written permission of<COMPANY NAME>

Tolerances exept where noted:
ISO 2768-1 (c), ISO 2768-2 (K) & ISO 13920 BF

REV.	DESCRIPTION OF REVISION	CHECKER	APPROVER	DATE/SIGN.
A	ISSUED FOR PRODUCTION			24.01.25/

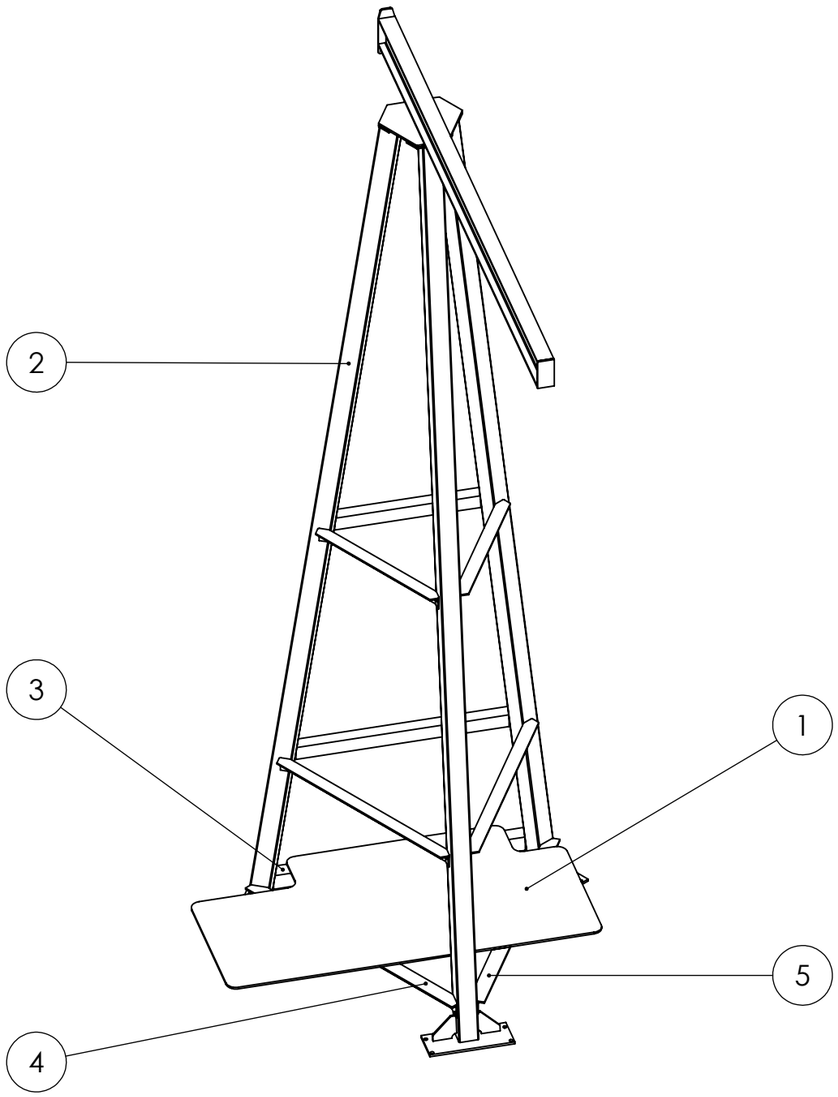

ITEM	QTY.	PART NUMBER	DESCRIPTION	UNIT WEIGHT [kg]
1	1	30901	Bunnplate, 1.0116 (S235J2G3)	132.43
2	1	30902	Sammenstilling kran	
3	1	30903	Vinkeljern bak, 1.0116 (S235J2G3)	13.44
4	1	30904	Vinkeljern høyre, 1.0116 (S235J2G3)	13.44
5	1	30905	Vinkeljern venstre, 1.0116 (S235J2G3)	13.44

All measurements are in mm U.N.O.
Deburr & remove all sharp edges.

Projection:

DO NOT SCALE DRAWING

REVISION: A

Universitetet i Agder

	NAME	SIGNATURE	DATE
DRAWN			
CHK'D			
APPV'D			
Q.A			

FINISH:
REPLACES:
REPLACED BY:

TITLE:
Sammenstilling

Spesification:

DWG NO. 30906

A3

WEIGHT: kg

SCALE:1:50

SHEET 1 OF 1

SOLIDWORKS Educational Product. For Instructional Use Only.