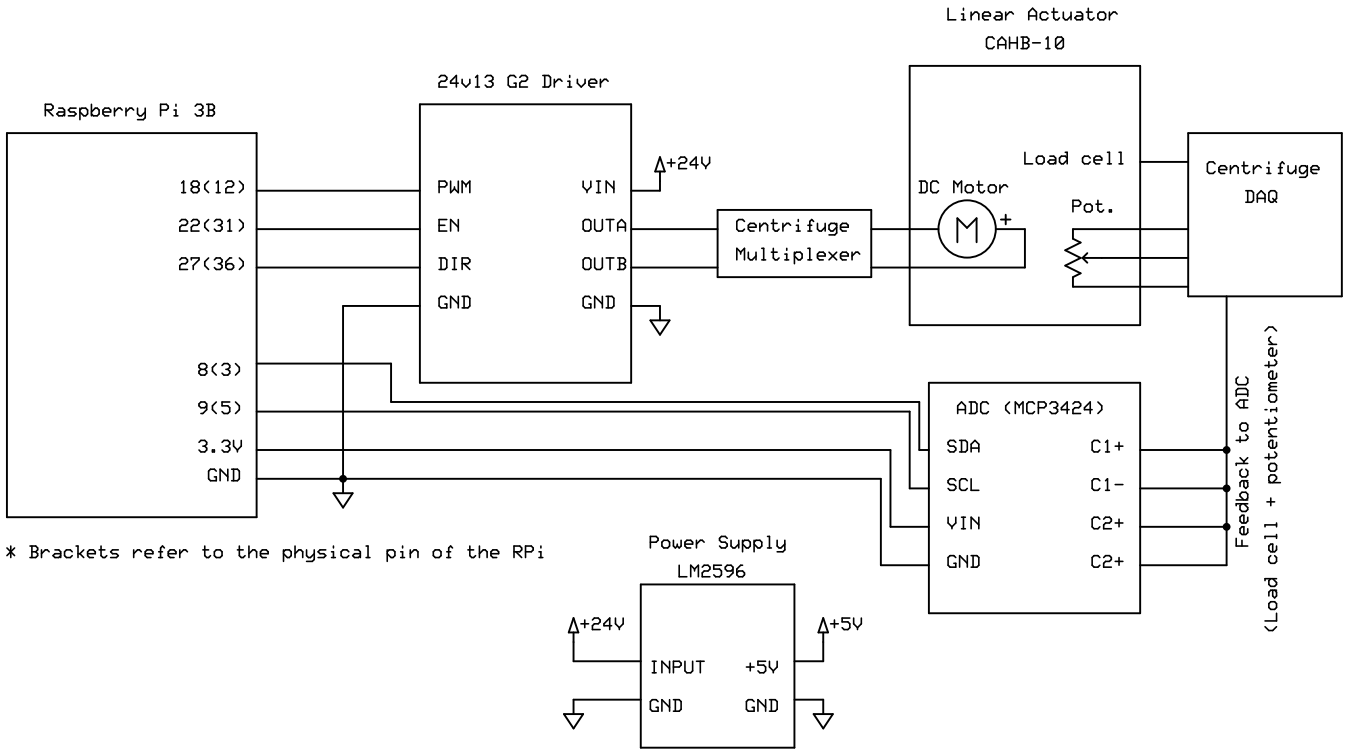

* Brackets refer to the physical pin of the RPi

Univ. of Pretoria		
Fly-by-Py		
A. Broekman	Rev 2.1 2020/05/14	Page 1