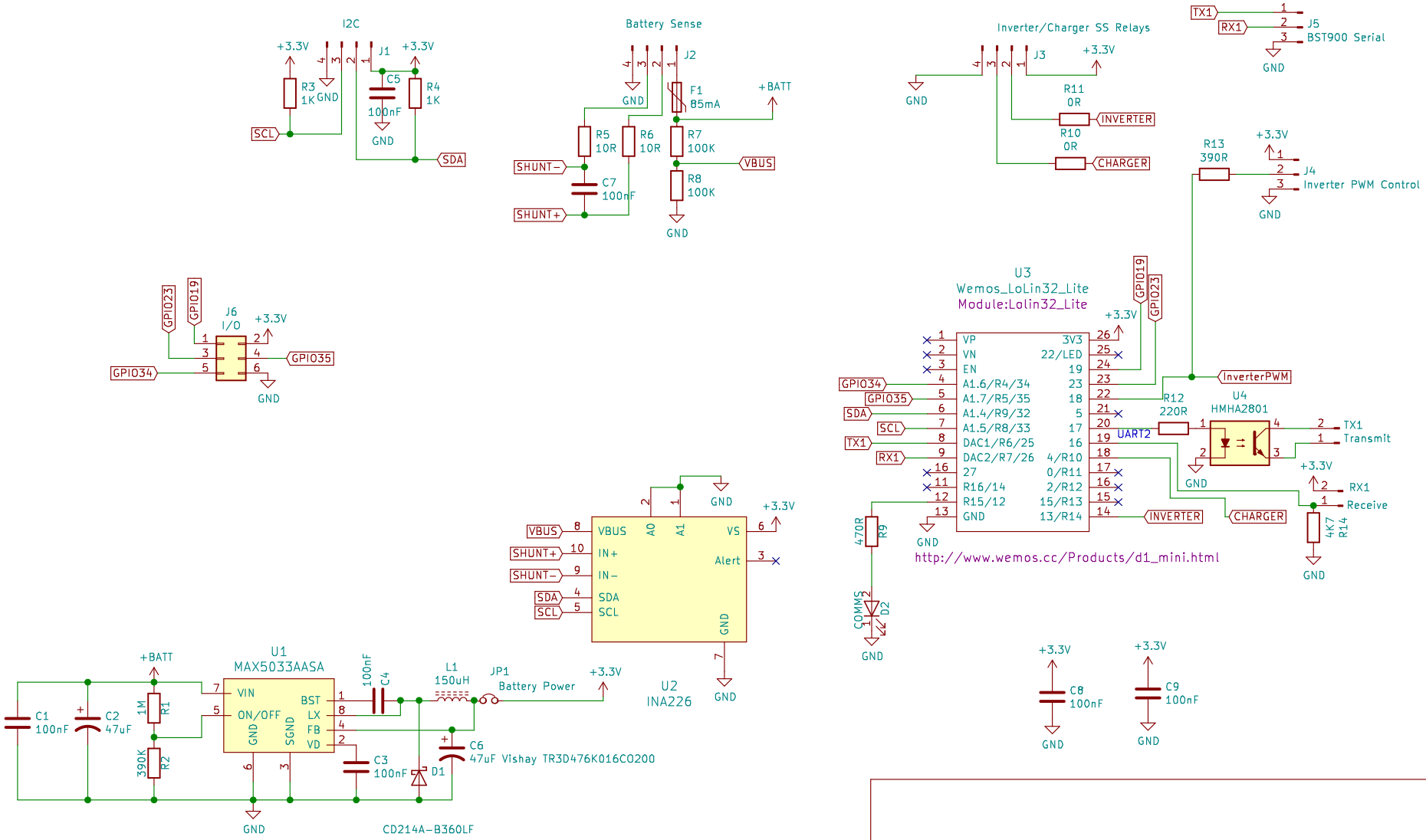

Derek Jennings

Sheet: /

File: ESP32ControllerCircuit.sch

Title: ESP32 diyBMS Controller

Size: A4	Date: 2019-12-15	**Rev: 1.0**
KiCad E.D.A. kicad 5.1.5		Id: 1/1