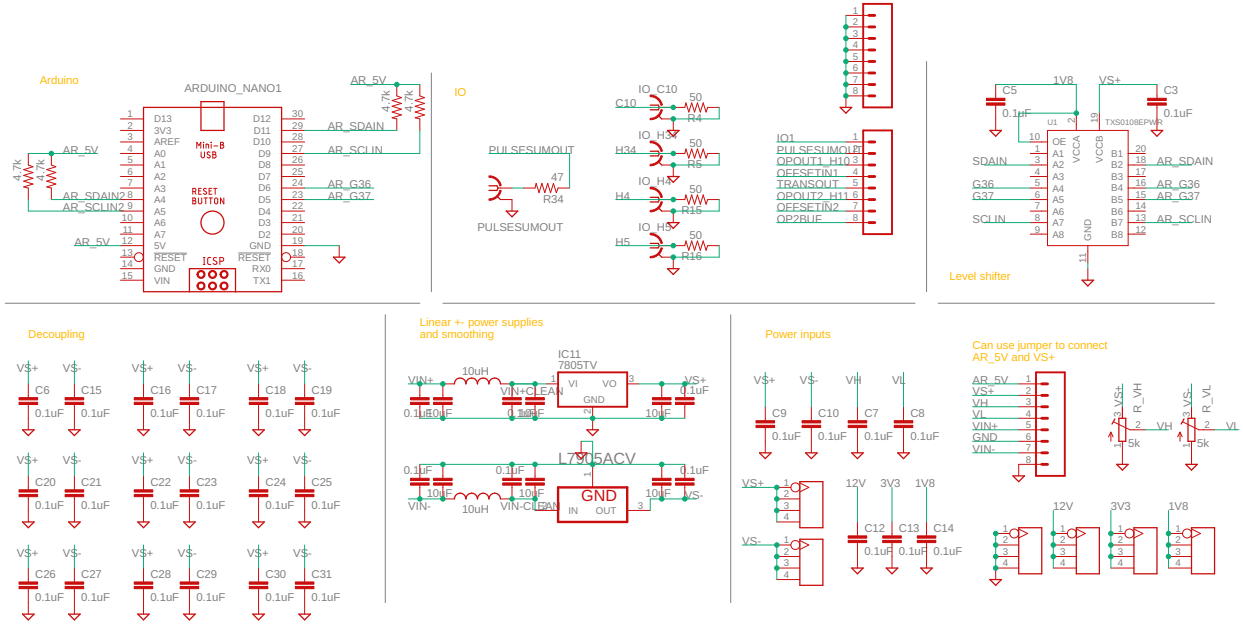
Arduino
ARDUINO_NANO1
Mini-B USB
RESET BUTTON
ICSP
AR_5V
AR_SDAIN
AR_SCLIN
AR_G36
AR_G37
IO
PULSESUMOUT
IO_C10
IO_H3
IO_H4
IO_H5
Level shifter
TXS0108EPWR
SDAIN
G36
G37
SCLIN
Decoupling
Linear +- power supplies and smoothing
IC11
7805TV
L7905ACV
10uH
VIN+
VIN-
VIN+CLEAN
VIN-CLEAN
Power inputs
Can use jumper to connect AR_5V and VS+
12V
3V3
1V8

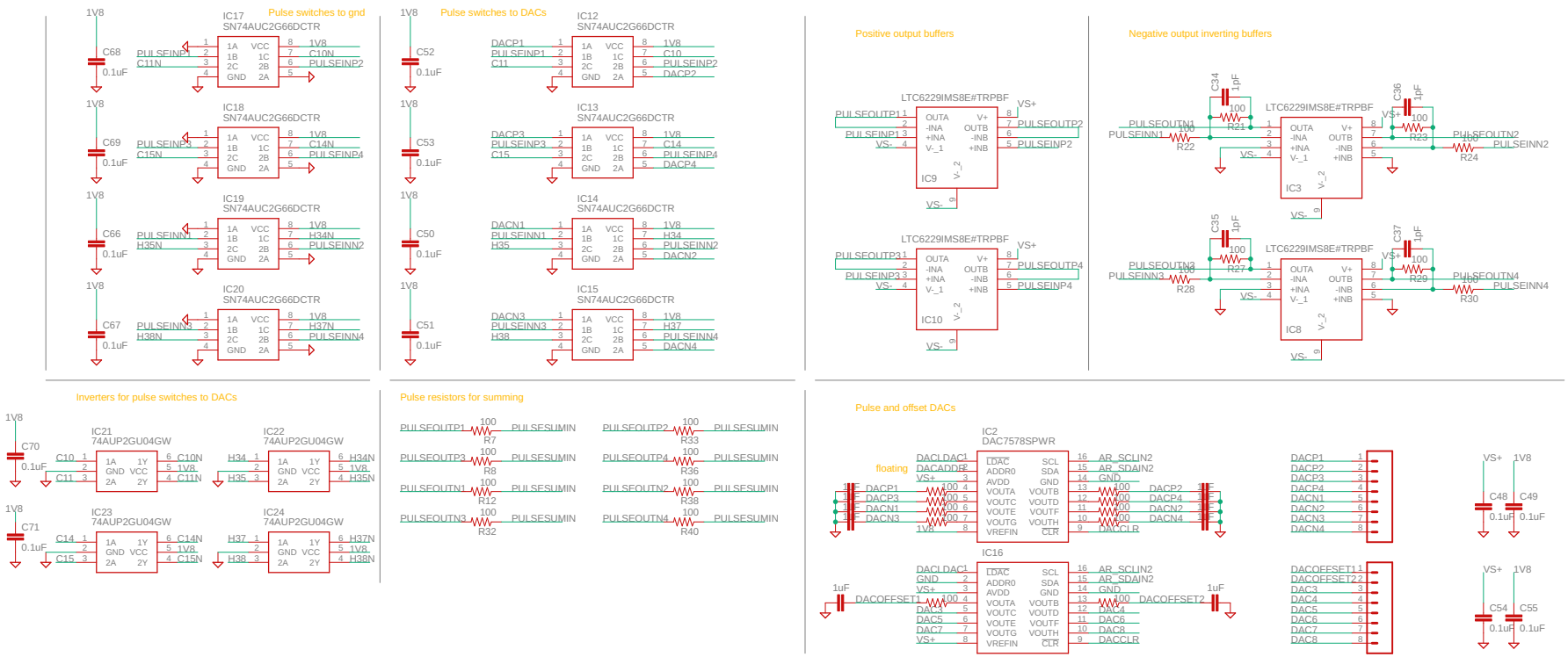
Pulse switches to gnd
IC17
SN74AUC2G66DCTR
C68
0.1uF
PULSEINP1
C11N
C10N
PULSEINP2
IC18
SN74AUC2G66DCTR
C69
0.1uF
PULSEINP3
C15N
C14N
PULSEINP4
IC19
SN74AUC2G66DCTR
C66
0.1uF
PULSEINN1
H35N
H34N
PULSEINN2
IC20
SN74AUC2G66DCTR
C67
0.1uF
PULSEINN3
H38N
H37N
PULSEINN4
Pulse switches to DACs
IC12
SN74AUC2G66DCTR
C52
0.1uF
DACP1
PULSEINP1
C11
C10
PULSEINP2
DACP2
IC13
SN74AUC2G66DCTR
C53
0.1uF
DACP3
PULSEINP3
C15
C14
PULSEINP4
DACP4
IC14
SN74AUC2G66DCTR
C50
0.1uF
DACN1
PULSEINN1
H35
H34
PULSEINN2
DACN2
IC15
SN74AUC2G66DCTR
C51
0.1uF
DACN3
PULSEINN3
H38
H37
PULSEINN4
DACN4
Positive output buffers
LTC6229IMS8E#TRPBF
PULSEOUTP1
PULSEINP1
VS-
VS+
PULSEOUTP2
PULSEINP2
IC9
LTC6229IMS8E#TRPBF
PULSEOUTP3
PULSEINP3
PULSEOUTP4
PULSEINP4
IC10
Negative output inverting buffers
C34
1pF
R21
R22
LTC6229IMS8E#TRPBF
PULSEOUTN1
PULSEINN1
C36
1pF
R23
R24
PULSEOUTN2
PULSEINN2
IC3
C35
1pF
R27
R28
LTC6229IMS8E#TRPBF
PULSEOUTN3
PULSEINN3
C37
1pF
R29
R30
PULSEOUTN4
PULSEINN4
IC8
Inverters for pulse switches to DACs
IC21
74AUP2GU04GW
C70
0.1uF
C10
C11
C10N
C11N
IC22
74AUP2GU04GW
H34
H35
H34N
H35N
IC23
74AUP2GU04GW
C71
0.1uF
C14
C15
C14N
C15N
IC24
74AUP2GU04GW
H37
H38
H37N
H38N
Pulse resistors for summing
PULSEOUTP1
R7
PULSESUMIN
PULSEOUTP2
R33
PULSEOUTP3
R8
PULSEOUTP4
R36
PULSEOUTN1
R12
PULSEOUTN2
R38
PULSEOUTN3
R32
PULSEOUTN4
R40
Pulse and offset DACs
IC2
DAC7578SPWR
floating
DACADDR
DACLDAC
DACP1
DACP3
DACN1
DACN3
DACP2
DACP4
DACN2
DACN4
AR_SCLIN2
AR_SDAIN2
DACLCLR
C48
C49
0.1uF
IC16
DACOFFSET1
DACOFFSET2
DAC5
DAC7
DAC6
DAC8
C54
C55
0.1uF

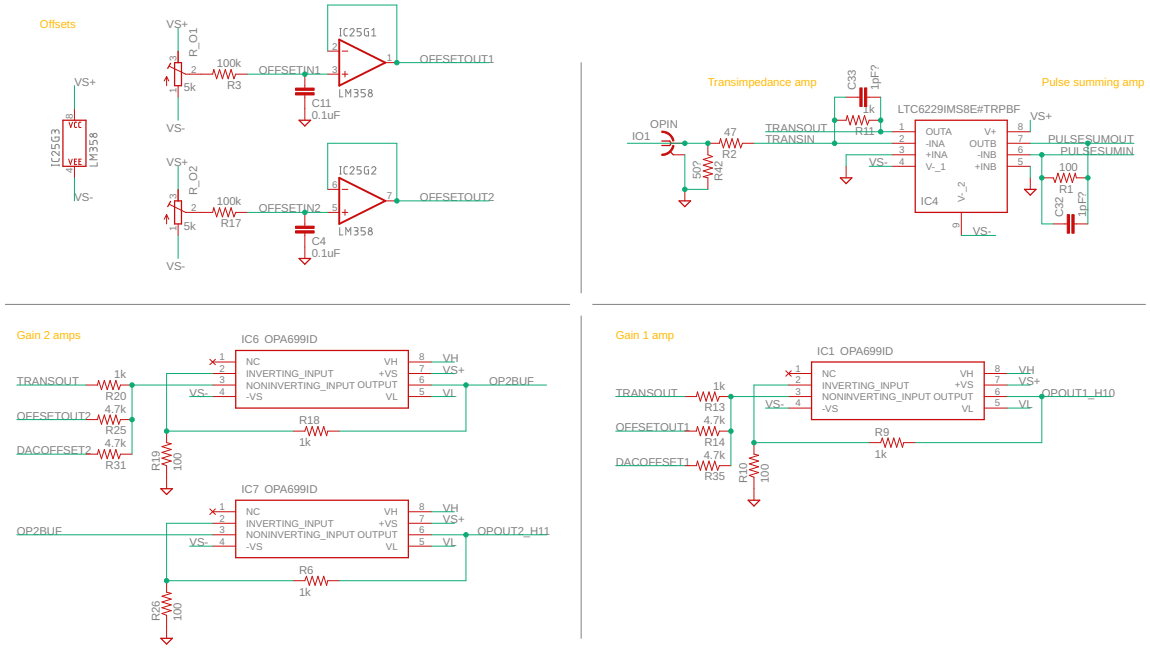
Offsets
VS+
VS-
IC25G3
LM358
VCC
VEE
R_O1
5k
100k
R3
OFFSETIN1
C11
0.1uF
IC25G1
LM358
OFFSETOUT1
R_O2
5k
100k
R17
OFFSETIN2
C4
0.1uF
IC25G2
LM358
OFFSETOUT2
Transimpedance amp
Pulse summing amp
OPIN
IO1
47
R2
50?
R42
TRANSOUT
TRANSIN
C33
1pF?
1k
R11
LTC6229IMS8E#TRPBF
OUTA
-INA
+INA
V-_1
V+
OUTB
-INB
+INB
V-_2
IC4
PULSESUMOUT
PULSESUMIN
100
R1
C32
1pF?
Gain 2 amps
IC6 OPA699ID
TRANSOUT
1k
R20
OFFSETOUT2
4.7k
R25
DACOFFSET2
4.7k
R31
R19
100
NC
INVERTING_INPUT
NONINVERTING_INPUT
-VS
VH
+VS
OUTPUT
VL
OP2BUF
R18
1k
IC7 OPA699ID
OP2BUF
R26
100
R6
1k
OPOUT2_H11
Gain 1 amp
IC1 OPA699ID
TRANSOUT
1k
R13
OFFSETOUT1
4.7k
R14
DACOFFSET1
4.7k
R35
R10
100
R9
1k
OPOUT1_H10

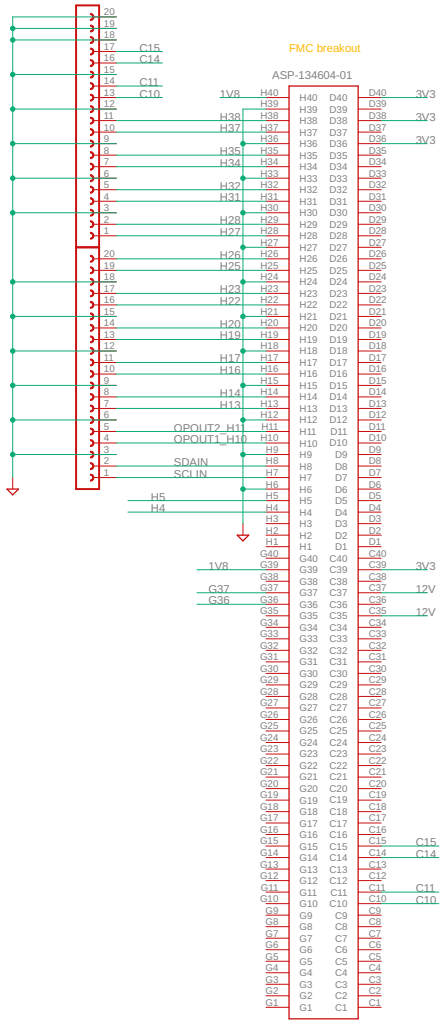
FMC breakout
ASP-134604-01
1V8
3V3
12V
C15
C14
C11
C10
H38
H37
H35
H34
H32
H31
H28
H27
H26
H25
H23
H22
H20
H19
H17
H16
H14
H13
OPOUT2_H11
OPOUT1_H10
SDAIN
SCLIN
H5
H4
G37
G36