COMPUTER AIDED DESIGN

PROJECT DOCUMENTATION
CARBON MONOXIDE CONCENTRATION CONTROLLER

TECHNICAL UNIVERSITY OF CLUJ-NAPOCA ROMANIA

Supervisor:

Sl. Dr. Ing. Raul Traian Fizeșan

Student:

Ardelean Andreea Maria
Group e2021

Contents

1. Project Overview 3
1.1 Design Requirements 3
1.2 History of Carbon Monoxide Sensors 3
1.3 Modern CO Sensors 3
2. Block Diagram 4
2.1 Short Introduction 4
2.1.1 The Sensor Signal 4
2.1.2 Voltage Domain Converter 4
2.1.3 Hysteresis Comparator 4
2.1.4 Relay Control 4
2.1.5 The LED and Ventilator 5
3. Circuit Schematic 6
4.Circuit blocks 6
4.1 CO Sensor 6
4.1.1 Implementation 7
4.1.2 Calculations and results 7
4.2 The Voltage Domain Converter 8
4.2.1 Description 9
4.2.2 Sizing components 9
4.2.3 Simulation results 10
4.3 The Hysteresis Comparator 11
4.3.1 Purpose and function 11
4.3.2 Calculations and Component Sizing 12
4.3.3. Simulations and Results 13
4.4 The LED and Fan 14
4.4.1 Choosing the LED 14
4.4.2 Calculating the Resistor 15
4.4.3 Simulations and results 15
4.5 Relay Control 16
4.5.1 Implementation and Function 16
4.5.2 Sizing Components 16
4.5.3 Simulations 17
5. Additional Simulations 19

5.1 Monte-Carlo Simulation 19
5.2 Worst Case simulation 21
6.Bill of Materials 22
7. Bibliography 23

1. Project Overview

1.1 Design Requirements

Design a system using resistive gas sensors to maintain the concentration of carbon monoxide in an enclosure between the limits (1000ppm…12000ppm). There is a source in the enclosure that continuously generates carbon monoxide. When the concentration has reached the upper limit (12000 ppm), the system will start the fan that will introduce fresh air. When the concentration of carbon monoxide reaches the lower limit (1000 ppm), the system will give the command to stop the fan. From the sensor data sheet, it is known that at a variation of the gas concentration (400 ... 18000ppm) the electrical resistance of the sensor varies linearly in the range (85 ... 35 kΩ). The variation of the electrical resistance of the sensor must be converted into a voltage variation in the range [2÷ (Vcc-2V)]. Vcc is specified to be 15 V. The fan is controlled by a hysteresis comparator via a relay which is modeled with a resistor.

The state of the fan (on/off) is indicated by a blue LED.

A carbon monoxide (CO) sensor is a device that detects the presence and concentration of carbon monoxide gas in the environment. It typically uses chemical or electrochemical methods to measure the CO levels and converts this information into an electrical signal, which can be used for monitoring, alarming, or controlling ventilation systems to ensure safety and air quality.

1.2 History of Carbon Monoxide Sensors

Carbon monoxide (CO) sensors have undergone significant evolution since their inception, driven by the critical need to detect this deadly gas. Carbon monoxide is a colorless, odorless gas that can cause severe health issues or even death if inhaled in large quantities. The development of CO sensors has been a crucial advancement in ensuring safety in residential, commercial, and industrial environments.

1.3 Modern CO Sensors

CO sensors are now incorporated with modern electronics and microprocessors, which enable smart features such as digital displays, wireless communication, and interaction with home automation systems. These sophisticated sensors provide real-time monitoring, data logging, and remote alerts, which improves their functionality and convenience of use.

CO sensors are generally considered basic safety features in homes, automobiles, and workplaces. Many countries' regulatory organizations have enforced their installation in residential buildings, assuring widespread use and improved public safety.

2. Block Diagram

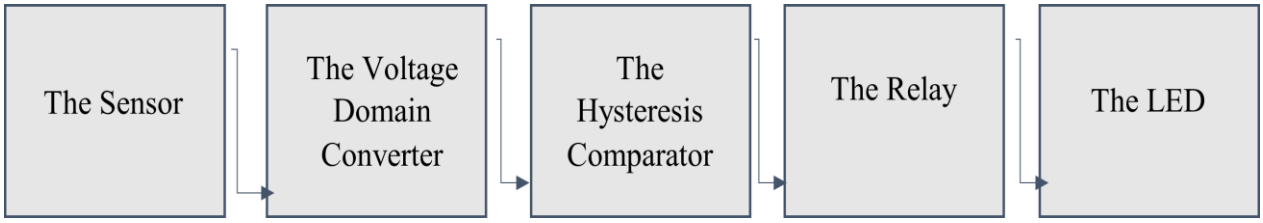

Figure1 Block Diagram

2.1 Short Introduction

2.1.1 The Sensor Signal

The sensor detects carbon dioxide levels by changing its resistance based on CO concentration. This resistance change is converted into a voltage signal for the next stage.

2.1.2 Voltage Domain Converter

A voltage domain converter adjusts the voltage range of a signal to match the requirements of the next stage in a circuit. It typically amplifies and/or level shifts the input signal to ensure it fits within the operational range of subsequent components, such as comparators, ensuring accurate and reliable signal processing.

2.1.3 Hysteresis Comparator

Using hysteresis to prevent abrupt on/off switching, a hysteresis comparator compares an input signal to predetermined reference values. It therefore possesses two distinct thresholds, one for activating the output and another for deactivating it. For applications requiring precise control, this guarantees steady and noise-free operation.

2.1.4 Relay Control

Relay control uses a transistor to switch a relay on or off based on a control signal. When the control signal is high, the transistor turns on, energizing the relay coil and closing the relay contacts to power the connected load. When the control signal is low, the transistor turns off, de-energizing the relay and disconnecting the load. This allows low-power circuits to control high-power devices.

2.1.5 The LED and Ventilator

The LED and fan are controlled by the relay. When the relay is energized, it powers the fan to ventilate the enclosure and turns on the LED to indicate the fan is running. When the relay is de-energized, the fan and LED are turned off.

3. Circuit Schematic

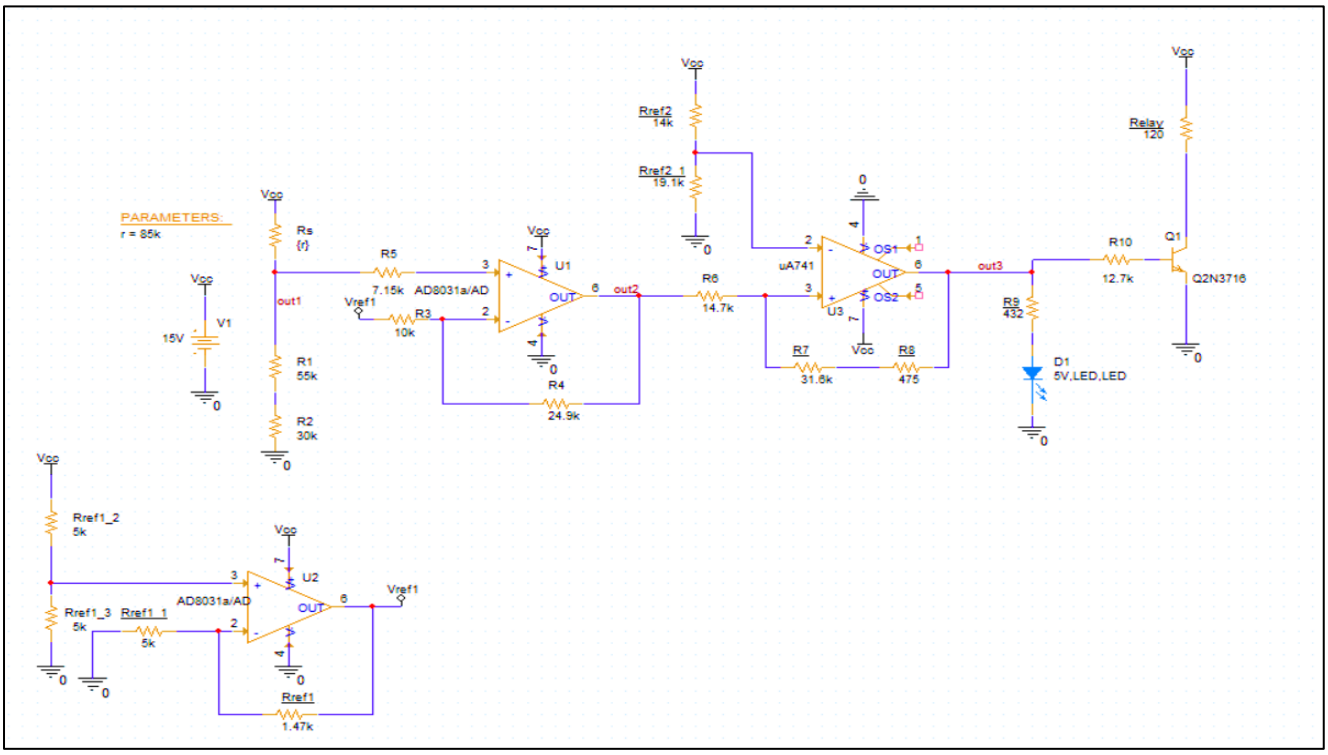

Figure 2 - Circuit Schematic

4.Circuit blocks

4.1 CO Sensor

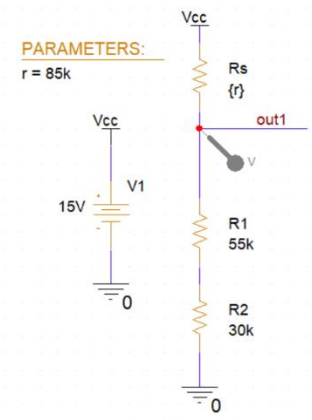

Figure 3 - The CO Sensor

4.1.1 Implementation

The first stage of the circuit is responsible for measuring the concentration of carbon monoxide (CO) using a resistive gas sensor, and converting this resistance-based signal into a measurable voltage.

This stage consists of a voltage divider, where the resistive sensor (R_s) is connected in series with two fixed resistors, R_1 and R_2, and powered by a DC voltage source V_{cc}= 15V. The output voltage V_{out1} represents the sensor response and will vary directly with CO concentration.

The sensor resistance (R_s) is implemented using the 'PARAM' component, to which I added the propriety 'r', with the value 85 kΩ (the highest value specified in the requirements data sheet). Consequently, I chose the values of the resistors R_1 (55 kΩ) and R_2(35 kΩ) to be equal to the highest value of the sensor resistance, to ensure a reliable mid-point voltage when the concentration of CO is at its lowest. This resistor choice provides useful simulation results that foster the implementation of the voltage domain converter and, later on, the hysteresis comparator. Additionally, all the resistors chosen are from the E96 Table, and have a tolerance of 1%, which helps provide more accurate results.

4.1.2 Calculations and results

Using the voltage divider formula, we can calculate the exact voltage at the node V_{out1}.

$$V_{out1} = \frac{R_{fixed}}{R_{fixed}+R_s} \times V_{CC} \quad (1)$$

We perform this calculation twice, once using the minimum value for R_s, and then the maximum value, so as to determine the limits of the voltage domain that the sensor captures. This domain will then be converted into our desired range of values that will be utilized for the rest of the circuit. This first domain is denoted V_{cd}, symbolizing the domain that will be converted.

$$V_{cdmax} = \frac{85}{85+35} \times 15 = 10{,}625V \quad (2)$$

$$V_{cdmin} = \frac{85}{85+85} \times 15 = 7{,}5V \quad (3)$$

To showcase these results, we will perform a DC Sweep analysis, with the Global Parameter 'r'.

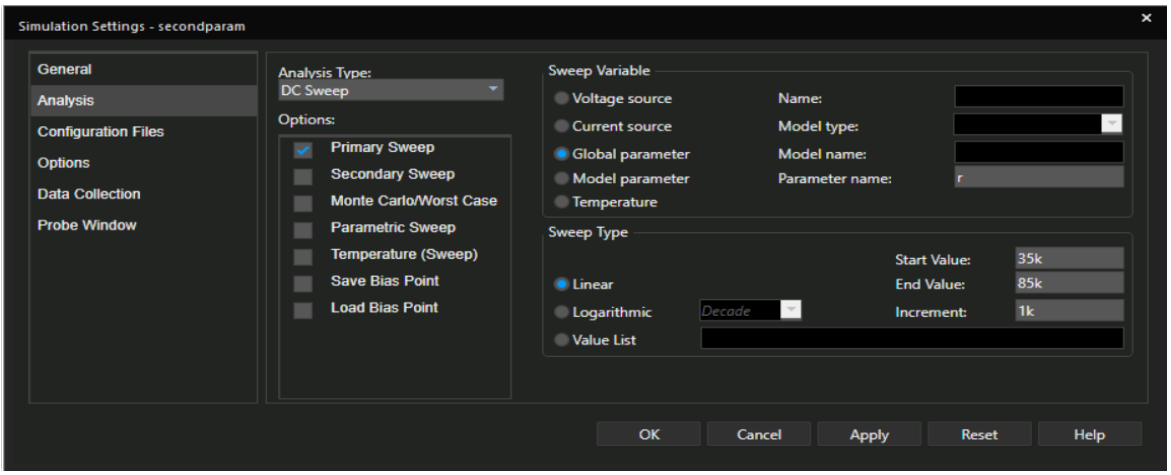

Figure 4 – The Simulation Profile

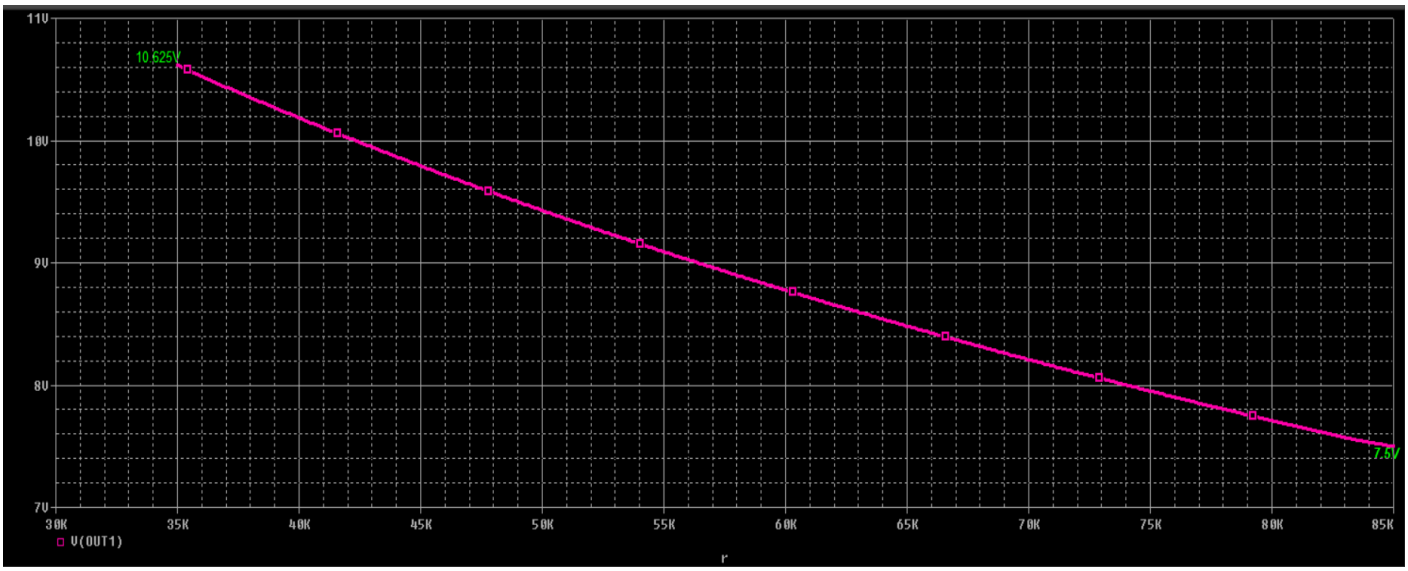

Figure 5 - V_{out1}

4.2 The Voltage Domain Converter

Figure 6 - The Voltage Domain Converter

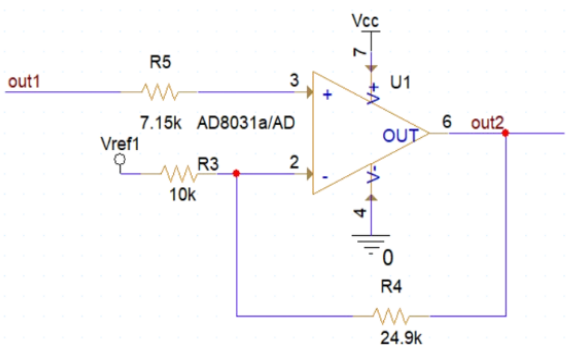

Figure 7 - Generating V_{ref1}

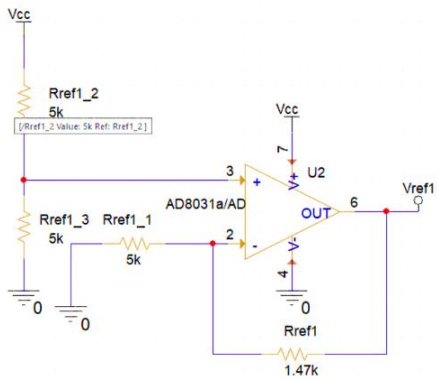

4.2.1 Description

The second stage of the circuit is responsible for scaling and shifting the voltage output from the sensor block into a new domain that fits the required range for digital interpretation or actuation (in this case, [2 V – 13 V]). This block uses a non-inverting amplifier with level shifting, based on an operational amplifier, to transform the sensor's output range from [7.5 V – 10.625 V] to the desired [2 V – 13 V]. This mapping is critical to ensure that the signal is correctly interpreted in the comparator and actuator stages that follow.

The non-inverting input of the operational amplifier (+) is connected to 'out1', through resistor R_5 (7.15 kΩ – E96, 1%). The inverting input (-) is tied to the reference voltage V_{ref1}via R_3 (10kΩ), and is connected to the output through the negative feedback resistor R_4(24.9kΩ), ensuring the proper functionality of the amplifier.

I chose to generate V_{ref1} using an operational amplifier, instead of a voltage divider connected directly to V_{cc}, due to the better accuracy provided by the amplifier. Using this design, I was able to obtain an accurate, constant value for V_{ref1}, perfect for being used as a reference voltage for the domain converter.

As for the specific components used, I decided upon the operational amplifier 'AD8031a/AD', after inspecting its specifications and utilizing them for the purpose it needs to serve. I mainly chose to work with this component in these areas, due to its high-speed and the fact that it features a rail-to-rail input and output operation, allowing it to function effectively across the full 0–15 V supply range used in the circuit. The combination of these characteristics makes the AD8031A ideal for the voltage domain converter, where a precise gain and wide output swing are required, and for the reference voltage stage, where output stability and minimal loading are critical. [reference]

4.2.2 Sizing components

Since in the previous steps we have obtained the voltage domain $V_{cd} \in [7{,}5V, 10{,}625V]$ that we need to convert to our desired domain $V_o \in [2V, 13V]$, the first step would be to calculate the gain of the amplifier using the following formula [reference]:

$$Gain = \frac{V_{omax} - V_{omin}}{V_{cdmax} - V_{cdmin}} \tag{4}$$

$$=> Gain = \frac{13-2}{10{,}625-7.5} = 3{,}52$$

Now we can use this result to size the resistors and, respectively, V_{ref1}.

$$\frac{R_4}{R_3} = Gain - 1 = 2{,}52 \tag{5}$$

$$R_5 = R_3 \parallel R_4 \tag{6}$$

Using the E96 table of resistors with a tolerance of 1%, I chose two resistors that would give the closest result to this ratio: $R_3 = 10\text{k}\Omega$ and $R_4 = 24.9\text{k}\Omega$. Therefore, $R_5 = 7.15\text{k}\Omega$.

$$V_{ref1} = \frac{\left(1+\frac{R_4}{R_3}\right)\times V_{cdmax} - V_{omax}}{\frac{R_4}{R_3}} \tag{7}$$

$$\Rightarrow V_{ref1} = \frac{3{,}52 \times 10{,}625 - 13}{2{,}52} = 9{,}69V$$

The next step is to generate the calculated V_{ref1}, using an operational amplifier. The non-inverted input (+) is connected to V_{cc} through a voltage divider that cuts the input signal in half ($R_{ref_{1_2}}$ *and* $R_{ref_{1_3}}$, both being 5 kΩ). I did this because, initially, V_{cc} (15V) is higher than our desired output of the amplifier ($V_{ref1} = 9{,}68V$), so by only using half of the signal, the input is lower than the output, which is necessary for an amplifier. For sizing the components of this segment, I have used the following formulas [reference]:

$$A_v = \frac{v_{out}}{v_{in}} = \frac{9{,}69}{7{,}5} = 1{,}292 \tag{8}$$

$$\frac{R_{ref1}}{R_{ref1_1}} = A_v - 1 = 0{,}292 \tag{9}$$

To obtain this value of the ratio, I chose $R_{ref1} = 1{,}47\text{k}\Omega$ and $R_{ref1_1} = 5\text{k}\Omega$ (both from the E96 table of 1% tolerance).

4.2.3 Simulation results

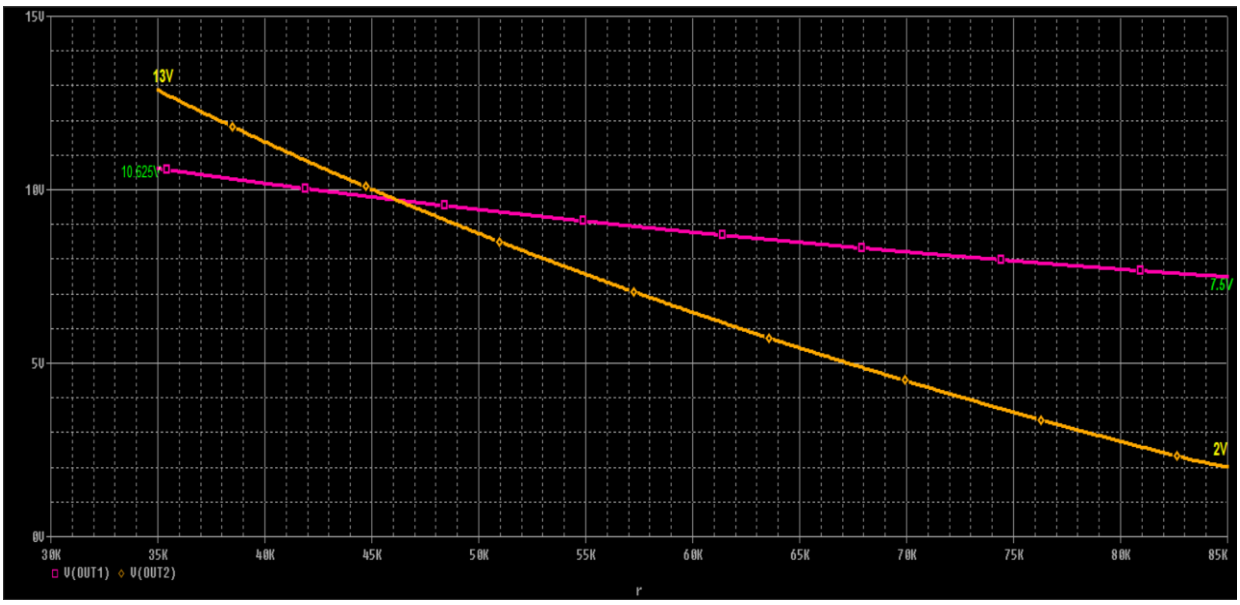

Figure 8- Output of The Voltage Domain Convertor (--) vs Output of Sensor (--)

4.3 The Hysteresis Comparator

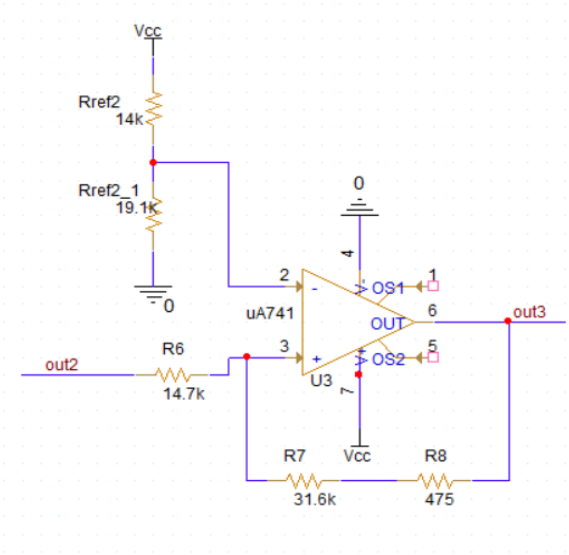

Figure 9 - The Hysteresis Comparator

4.3.1 Purpose and function

This stage of the circuit is designed to compare the amplified sensor signal to a defined reference level and generate a digital control signal that toggles between two output states. To prevent false triggering due to noise or small fluctuations near the threshold, the comparator includes positive feedback to create hysteresis, meaning it switches ON and OFF at two distinct voltage levels. When the input voltage becomes higher than the upper threshold, the comparator output is high (15V, due to the positive power supply of the component) and when the input is lower than the low threshold, the comparator output is 0V (because the negative power supply is connected to ground). The result is a clean, stable digital output signal that activates the fan and LED only when the CO concentration clearly passes predefined upper or lower bounds.

The output of the voltage domain converter is connected to the non-inverting input of the comparator via $R_6 = 14{,}7\text{k}\Omega$. This is also connected to the output of the comparator, through the series of resistors $R_7 = 31{,}6\text{k}\Omega$ and $R_8 = 475\Omega$, creating the positive feedback and, therefore, the hysteresis, with an upper threshold (when the output is high) and a lower threshold (when the output is low).

The negative input of the comparator is connected to a reference voltage V_{ref1}, obtained from V_{CC}, through a voltage divider formed by $R_{ref2} = 14\text{k}\Omega$ and $R_{ref2_1} = 19{,}1\text{k}\Omega$. I chose to generate V_{ref2} using a simple resistive voltage divider because, unlike V_{ref1} (which was used in the voltage domain converter and required high stability), this reference voltage does not need to remain perfectly constant throughout the operation. Minor variations in V_{ref2} do not significantly affect the switching behavior or reliability of the comparator, making a buffered reference unnecessary in this case.

4.3.2 Calculations and Component Sizing

The first step in implementing the comparator is calculating its thresholds, using the input voltage limits (2V and 13V), the maximum and minimum values of the indoor carbon monoxide concentration and the measurement range of the sensor in the following formulas:

$$V_{ThH} = (V_{cc} - 2) - \frac{[(V_{cc}-2)-2]\times CO_{min} - SR_{min}}{SR_{max} - SR_{min}} \quad (10)$$

$$V_{ThL} = (V_{cc} - 2) - \frac{[(V_{cc}-2)-2]\times CO_{max} - SR_{min}}{SR_{max} - SR_{min}} \quad (11)$$

$$\Rightarrow V_{ThH} = 13 - \frac{11 \times (1.000 - 400)}{18.000 - 400} = 12{,}625V$$

$$\Rightarrow V_{ThL} = 13 - \frac{11 \times (12.000 - 400)}{18.000 - 400} = 5{,}90V$$

Consequently, we can use these results to deduct the values of V_{ref2} and the resistors respectively. [reference]

$$V_{ThH} = -\frac{R_6}{R_7} \times V_{oL} + \left(1 + \frac{R_6}{R_7}\right) \times V_{ref2} \quad (12)$$

$$V_{ThL} = -\frac{R_6}{R_7} \times V_{oH} + \left(1 + \frac{R_6}{R_7}\right) \times V_{ref2} \quad (13)$$

Next, we subtract these two equations, keeping in mind that $V_{oL} = 0V$.

$$V_{ThH} - V_{ThL} = \frac{R_6}{R_7} \times V_{oH} \quad (14)$$

$$\Rightarrow \frac{R_6}{R_7} = 0{,}4583$$

From this ratio, I chose the values of the resistors: $R_6 = 14{,}7\text{k}\Omega$ and, instead of a single feedback resistor, I chose to place to resistors in series, $R_7 = 31{,}6\text{k}\Omega$ and $R_8 = 475\Omega$, with an equivalent resistance of 32,075kΩ. Furthermore, by plugging the ratio calculated above in equation (12), we can obtain the value for V_{ref2}.

$$V_{ref2} \times (\frac{R_6}{R_7} + 1) = V_{thH} \quad (15)$$

$$\Rightarrow V_{ref2} = \frac{12{,}625}{1{,}4583} = 8{,}657V$$

By taking this result and applying the voltage divider formula (similar to equation (1)), we calculate the values for the resistors necessary for the voltage divider: $R_{ref2} = 14\text{k}\Omega$ and $R_{ref2_1} = 19{,}1\text{k}\Omega$ (both values are from the E96 table of resistors, with 1% tolerance).

4.3.3. Simulations and Results

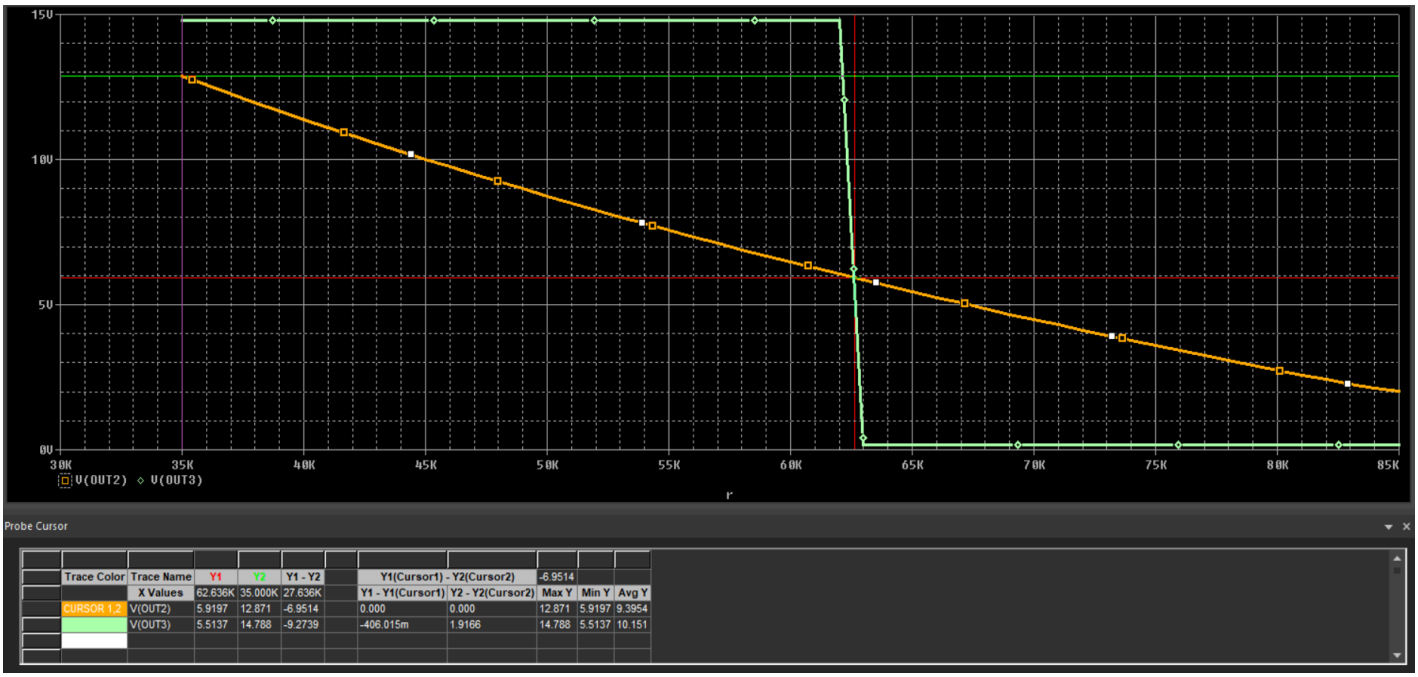

Figure 10 – Hysteresis output: Lower Threshold

For observing the lower threshold of the hysteresis, I kept the simulation profile exactly the same as the one I showed in Figure 4, keeping the 1kΩ increment. For a more precise looking output, a 0,1 kΩ increment would be better, but in this case, I want to clearly showcase the intersection of the two outputs. By using the cursor to pinpoint exactly the point of intersection, we see it indicate a value around 5.92V, quite close to the one that resulted from my calculations (5.90V).

When it comes to the upper threshold, I am going to modify the simulation profile, so that it goes backwards (from 85 kΩ to 35 kΩ), while keeping the increment at 1 kΩ.

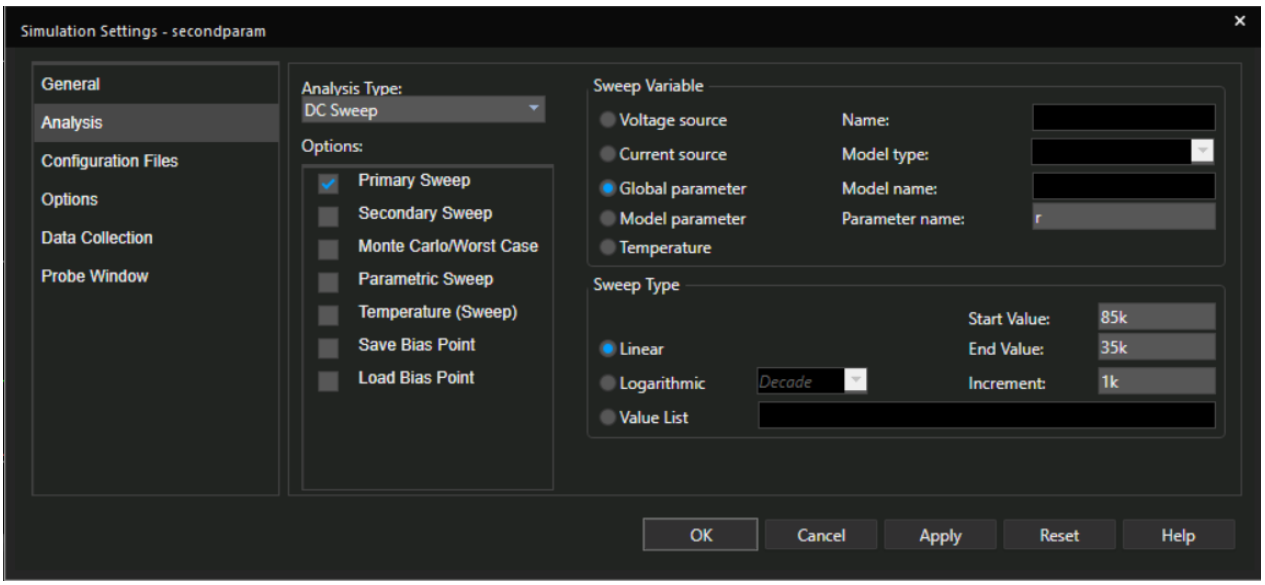

Figure 11 – Modified simulation profile

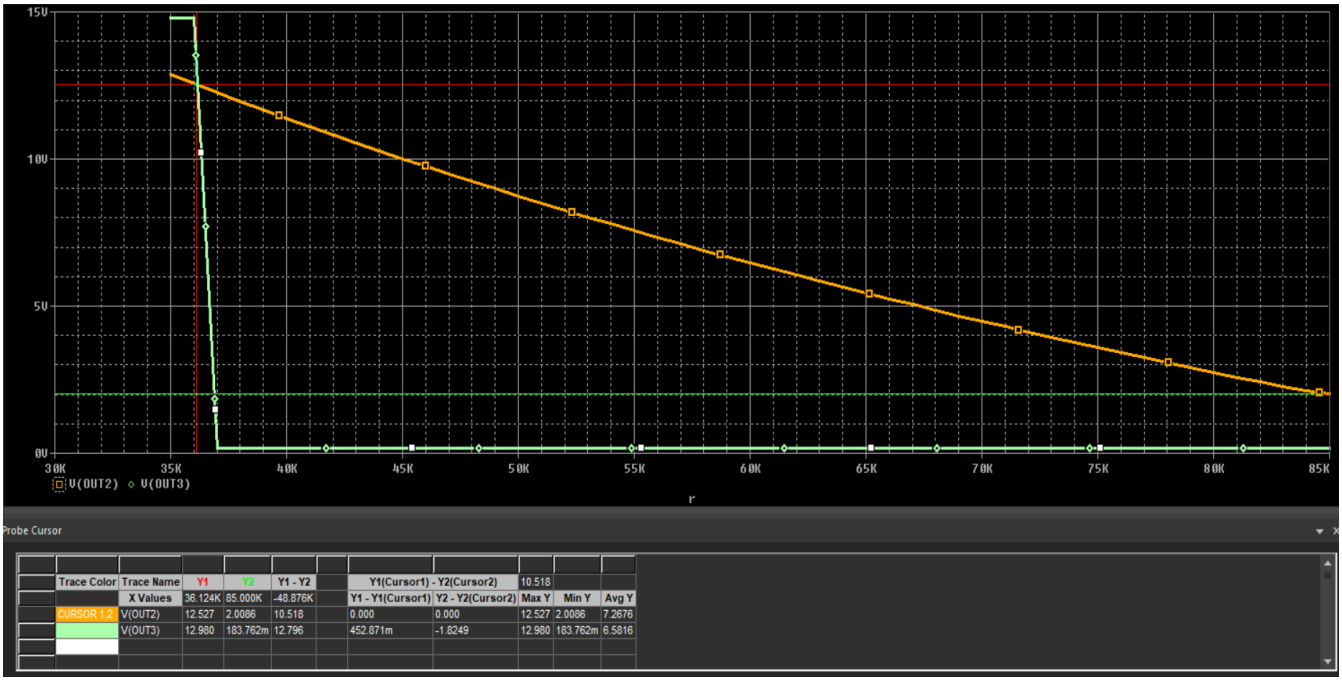

Figure 12 – Hysteresis output: Upper Threshold

We can see here that the value of the upper threshold measured with the cursor is at around 12.51, while the calculations provided a value of around 12,6. These results are satisfactory enough, since the output of the comparator is achieving the desired functionality.

4.4 The LED and Fan

4.4.1 Choosing the LED

For my circuit I was required to use a blue LED, so I chose to model my component following a technical data sheet. I also made sure to limit the current passing through the LED, in order to prevent it from breaking down, using resistor R_9.

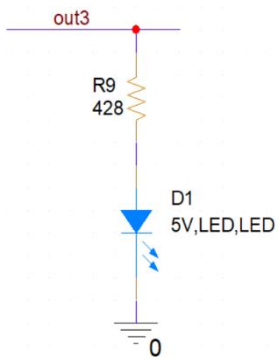

Figure 13 - The LED

According to the specifications of the component, the operating forward is 35mA, with a typical forward voltage of 3.5V, and a dominant wavelength of 468 nm, indicating a blue color. [reference]

The first pin of resistor R_9 is connected to the output of the comparator, while the second one is placed in series with the LED, which then leads to ground. The placement of the LED is perfectly intentional, and it serves as a direct indicator of the comparator output, meaning that, when 'out3' is high (15V), the LED is on, and when 'out3' is low, the LED is off. This positioning in the circuit allows the component to work properly, and display the level of CO, even if the Relay control is somehow disconnected or malfunctioning.

4.4.2 Calculating the Resistor

Since the maximum forward current on the LED is I_{max} =35mA, and the high output of the comparator sits at $V_{out3} = 15V$, we can calculate the resistor R_9 as being:

$$R_9 = \frac{V_{out3}}{I_{max}} = \frac{15}{35\times10^{-3}} = 428\Omega \qquad (16)$$

I am going to use the closest value I can find In the E96 table of resistors which is $R_9 = 432\Omega$.

4.4.3 Simulations and results

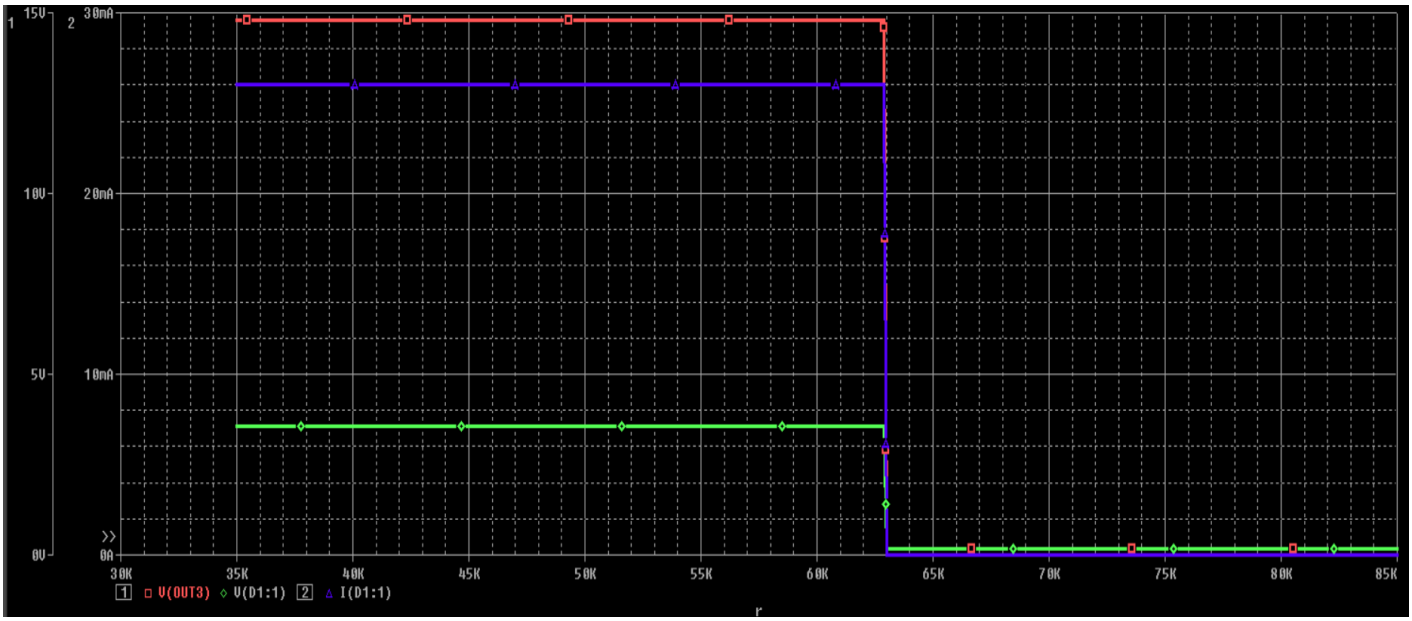

Figure 14 – LED Current and Voltage

Here we can observe the current and voltage across the LED, in relation to the comparator's output. Upon measurements, we see that the current through the LED is around 26mA, which is smaller than the maximum forward current (35mA), and the voltage is 3.56V, which is very close to the typical forward voltage specified in the component's data sheet. [reference]

4.5 Relay Control

4.5.1 Implementation and Function

The final stage of the circuit is responsible for driving a high-current load (such as a fan) based on the output of the hysteresis comparator. Since the comparator output is logic-level and cannot directly handle large currents, a relay driver circuit is used. For the relay, I chose the RS PRO Plug in Power Relay, which operates with a 12V DC coil, and a 120Ω resistance. Thus, I chose the Q2N3716 power BJT, which has a 10A maximum current, and an 80V threshold. I chose to implement this specific relay since it has a 12 V compatibility which matches the system's available power supply and the 10 A contact rating ensures the relay can switch high-current devices like fans safely in a real-world scenario.

The base of the transistor is connected to the output of the comparator via R_{10}. The emitter is directly tied to ground, while the relay resistor is placed in between the collector and respectively the V_{cc} supply.

For the voltage drop across the resistor to be 12V, we need to limit the current going into the base of the transistor, using R_{10}.

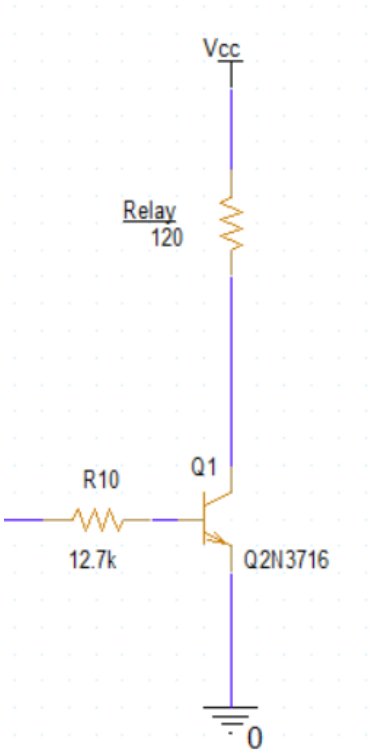

Figure 15 – Relay Control

4.5.2 Sizing Components

Firstly, we need to calculate the current through the coil using Ohm' Law:

$$I_{coil} = \frac{12V}{120} = 100mA \tag{17}$$

Additionally, we have to compute the current in the base of the transistor, assuming a standard gain ($\beta = 100$), and plugging these values into the formulas used for BJT transistors. [reference].

$$I_B = \frac{I_C}{\beta} = \frac{100\times10^{-3}}{100} = 1mA \tag{18}$$

After computing the current through the base, we can size the resistor connected to the base (R_{10}).

$$R_{10} = \frac{V_{BB}-V_{BE}}{I_B} = \frac{15-0.7}{10^{-3}} = 14.3k\Omega \tag{19}$$

Even though the value we obtained is already a standard value (E96 table), it is good practice to choose a smaller resistor for the base, so as to make sure the transistor is fully saturated. Thus, I will choose the resistor R_{10}=12.7$k\Omega$, which performs really well during simulations.

4.5.3 Simulations

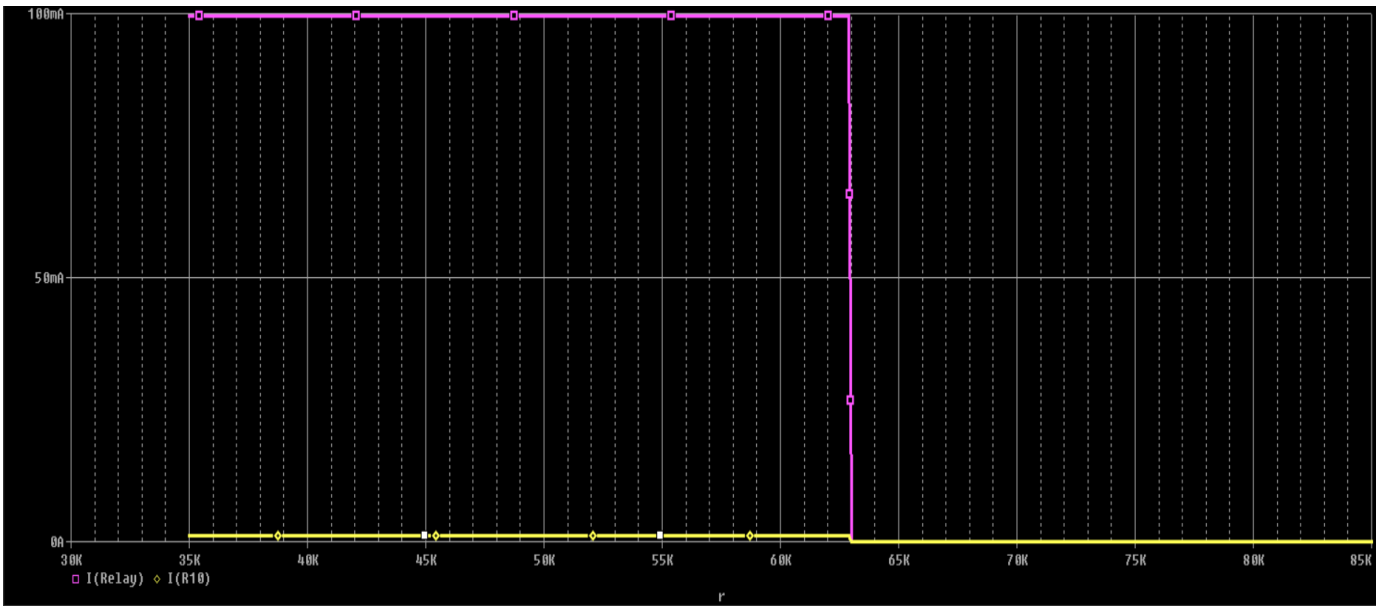

Figure 16 – Current through Coil (----) and Base (----)

This simulation showcases the current through the coil is at the desired value $I_{coil} = 100mA$, while the current in the base of the BJT is $I_B = 1mA$, which shows that our resistor (R_{10}=12.7$k\Omega$) is working properly.

Figure 17 – Relay Voltage (----) and LED Voltage (----)

Here we can observe the voltage across the relay resistor ($V_{relay} = 12V$), in relation to the voltage across the LED ($V_{LED} = 3.55V$). This simulation demonstrates that the circuit serves the desired purpose, closely monitoring the concentration of CO, turning on the LED as the relay voltage is high, and switching off when the voltage is low.

5. Additional Simulations

5.1 Monte-Carlo Simulation

Of course, before deciding that the circuit is done and is ready to put into practice, we need to analyze the Monte Carlo simulation. It will give us a general idea how a circuit will respond in practice, because of the 1% tolerance of all the resistances in the circuit chosen from the E96 standard table. I chose to output the sensor value, because that has the highest influence in all our calculations. For this I will be using a transient domain analysis to evaluate the real-time behavior and statistical stability of the sensor stage output.

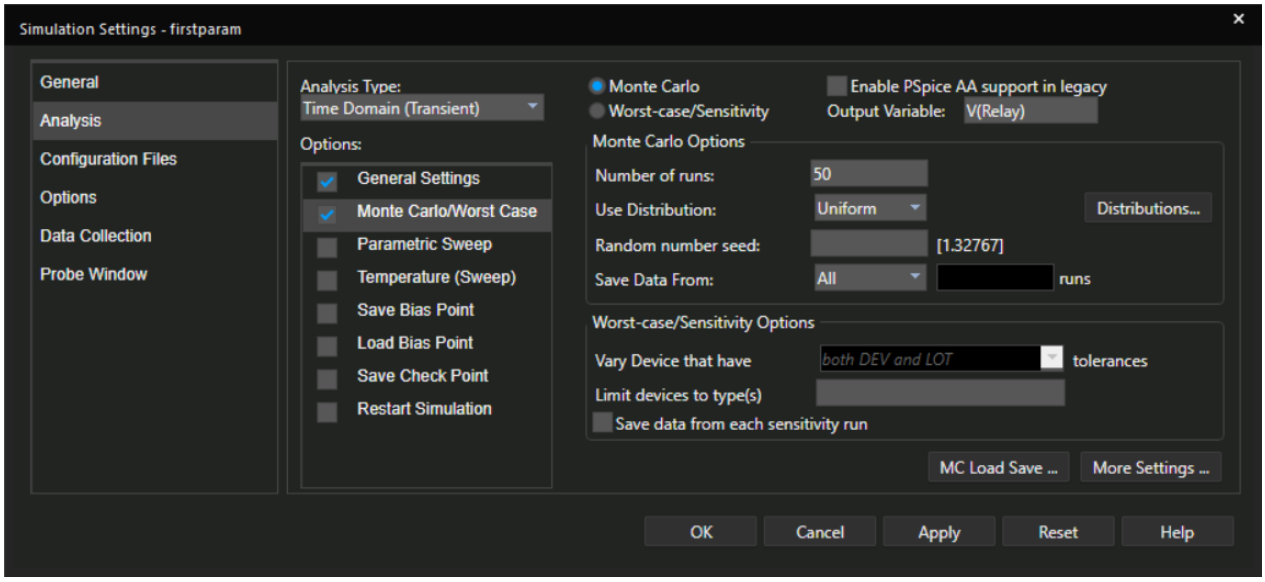

Figure 18 – Simulation Profile for Monte-Carlo

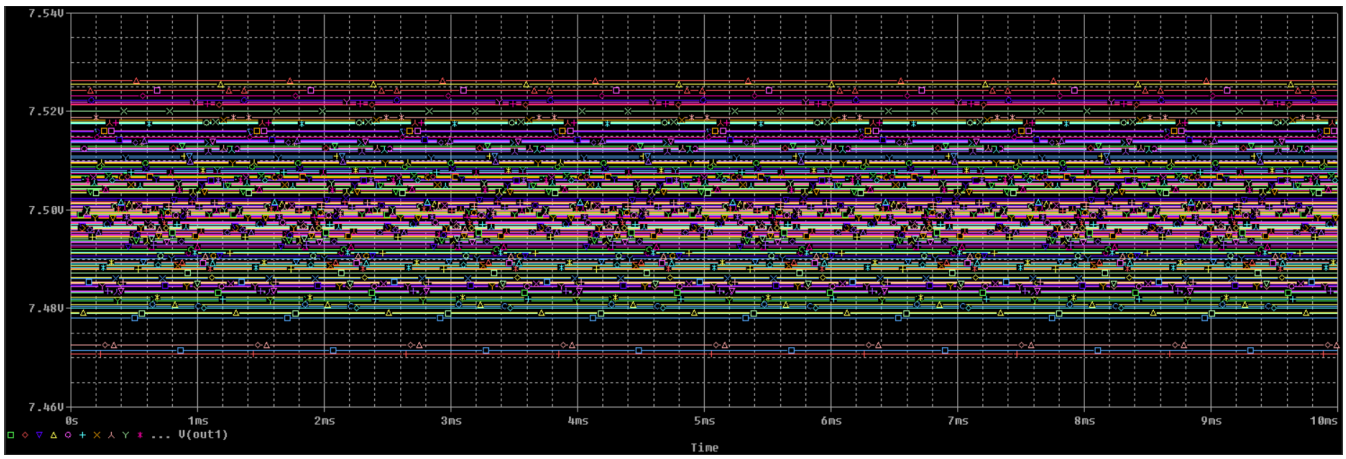

Figure 19 – Analysis of the Sensor

The analysis introduced statistical variations in resistor values to simulate real-world component tolerances. The output voltage V_{out1}, captured for each run, remained centered around the target 7.5 V with a deviation of less than ±40 mV across all samples. The resulting traces were flat and stable over time, indicating excellent DC performance and minimal sensitivity to tolerance-induced drift. This confirms that the sensor block is well-designed and resilient, providing a consistent output that will reliably interface with the downstream voltage domain converter and comparator stages, even under worst-case manufacturing variations.

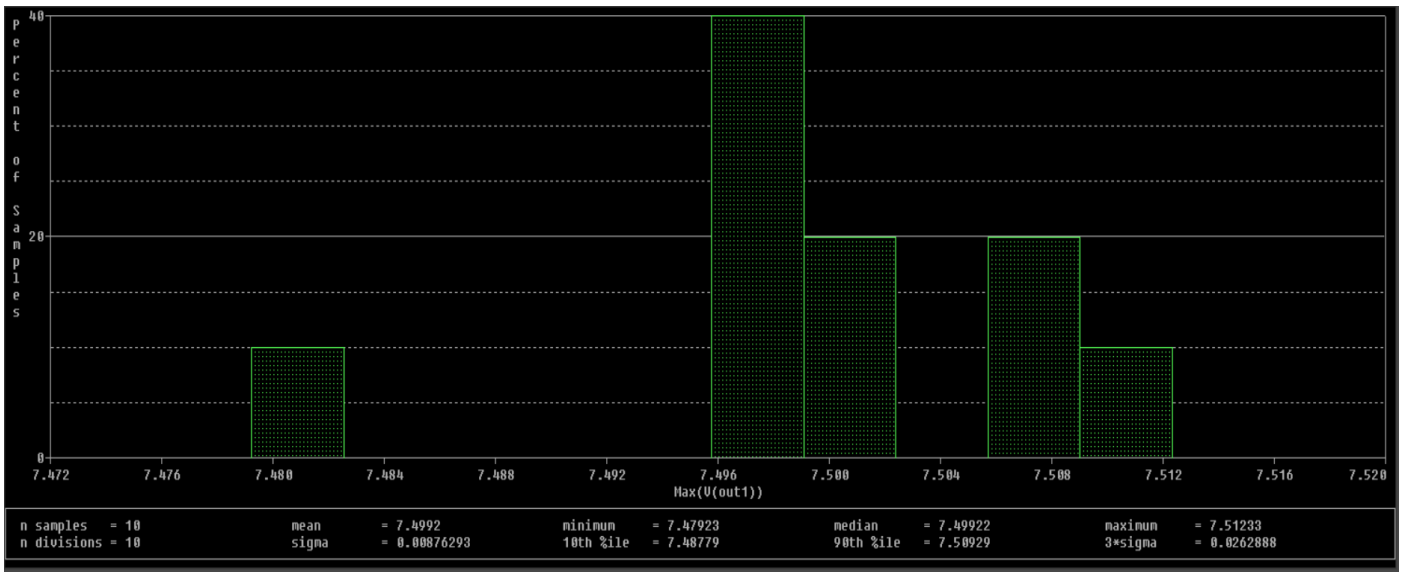

Figure 19 – Analysis of the Sensor

The histogram shown represents the distribution of the maximum sensor output voltage V_{out1}, across 10 Monte Carlo simulation runs, each incorporating resistor value tolerances to model real-world variation. The use of the max () function in this context ensures that the highest voltage reached in each run is captured and analyzed. Analyzing these maximum values helps validate whether the output remains within the design specification (centered at 7.5 V) despite variations in resistor values. The results confirm that the voltage is extremely stable, with a mean of 7.499 V, a standard deviation of only 8.76 mV, and a tight spread between 7.479 V and 7.512 V. This ensures that the subsequent amplifier and comparator stages receive a predictable and well-bounded input, even under worst-case component tolerances.

5.2 Worst Case simulation

The Worst-Case Simulation takes the least desire-able result of the tolerances to give us an idea of what could happen to our circuit, specifically in my case, to the output of the voltage domain converter. I chose to perform this simulation in combination with a DC-Sweep analysis because it is ideal for characterizing the steady-state behavior of the circuit allowing direct observation of how the output voltage V_{out2} evolves as the input resistance changes.

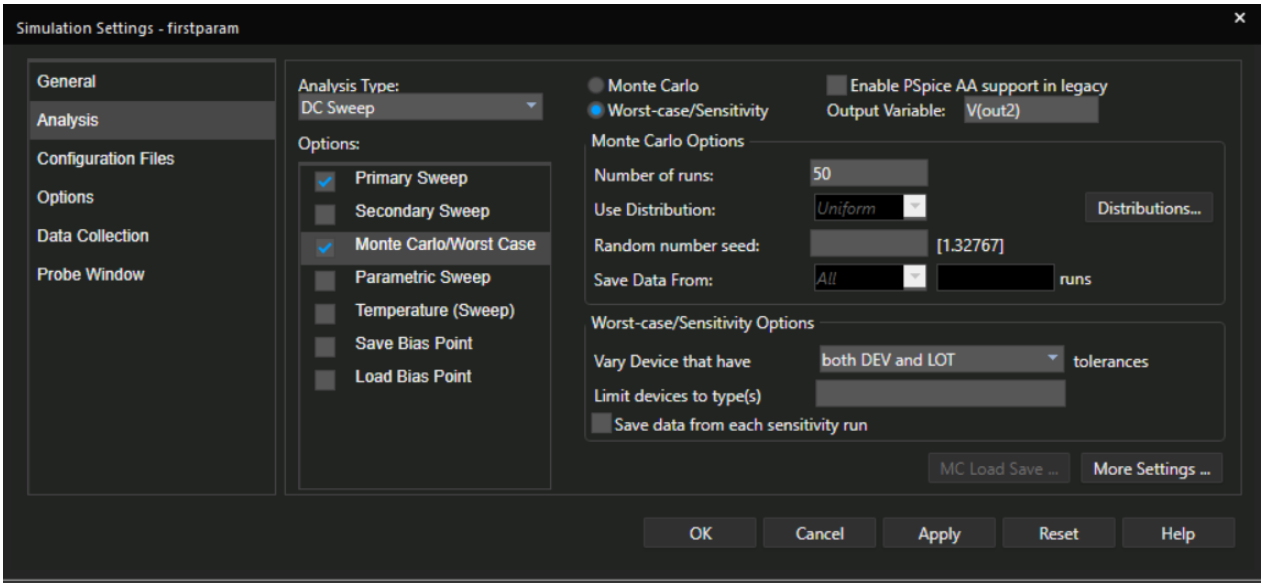

Figure 20 – Simulation Profile

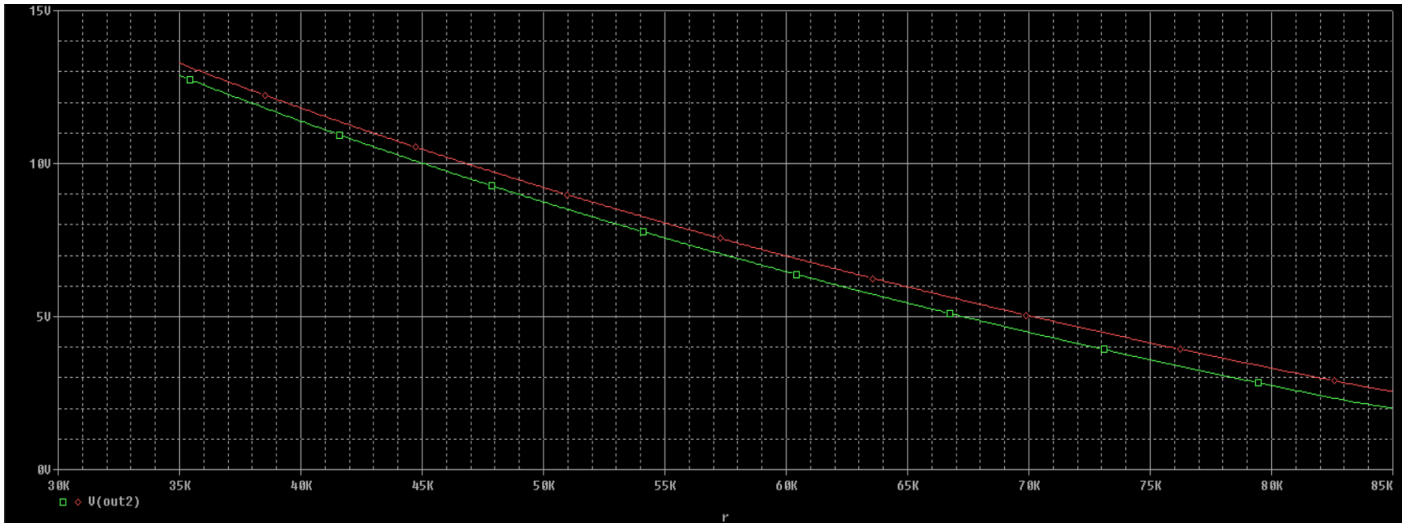

Figure 21 – Worst-Case Simulation for V(out2)

The resulting output voltage V_{out2} traces confirm that the converter maintains its full operational range — from approximately 13 V (high CO) to 2 V (low CO) — even in worst-case conditions. The spread of output voltages remains well bounded at each input point, demonstrating that the amplifier is both accurate and tolerant to component variation. This ensures the comparator receives valid logic-level inputs across all operating conditions.

6.Bill of Materials

Bill Of Materials May 22,2025 16:38:04 Page1

Item	Quantity	Reference	Part
1	1	D1	5V, LED, LED
2	1	Q1	Q2N3716
3	1	Relay	120
4	1	Rref1	1.47k
5	1	Rref2	14k
6	3	Rref1_1, Rref1_2, Rref1_3	5k
7	1	Rref2_1	19.1k
8	1	Rs	
9	1	R1	55k
10	1	R2	30k
11	1	R3	10k
12	1	R4	24.9k
13	1	R5	7.15k
14	1	R6	14.7k
15	1	R7	31.6k
16	1	R8	475
17	1	R9	432
18	1	R10	12.7k
19	2	U1, U2	AD8031a/AD
20	1	U3	uA741

7. Conclusion

In this project we focused on designing a reliable and effective carbon monoxide (CO) monitoring system to maintain safe CO levels in an enclosed environment. The system integrates various components, including a CO sensor, operational amplifiers configured as a voltage domain converter, and a hysteresis comparator, along with relay control and visual indicators.

The CO sensor accurately detects CO concentration changes by varying its resistance. The voltage domain converter shifts the sensor signal into a useable voltage range, and the hysteresis comparator provides steady operation by preventing the relay from switching too quickly.

The relay control circuit, incorporating a BJT for switching, effectively manages the operation of the fan and LED indicator. This design ensures that the fan is activated to ventilate the enclosure when CO levels are high, and deactivated when levels are safe, providing a robust and automatic response to varying CO concentrations.

The project successfully demonstrates (hopefully) a simple, comprehensive approach to CO monitoring, combining sensor technology, signal processing, and control mechanisms into a reliable system.

7. Bibliography

Bibliography

1. Universitatea Politehnica din Cluj Napoca, "Didactic - ED":
   http://www.bel.utcluj.ro/dce/didactic/ed/
2. Universitatea Politehnica din București, "Didactic - ED,":
   http://193.226.6.189/dce/didactic/ed/
3. Futurelec- 3mm Blue LED Technical Data
   https://www.futurlec.com/LED/LED3B.shtml
4. RS PRO Plug in Power Relay, 12V dc Coil, 10A Switching Current, DPD
   https://my.rs-online.com/web/p/power-relays/0348756
5. Standard resistor values:
   https://riedon.com/blog/e24-e48-e96-and-e192-resistor-values/