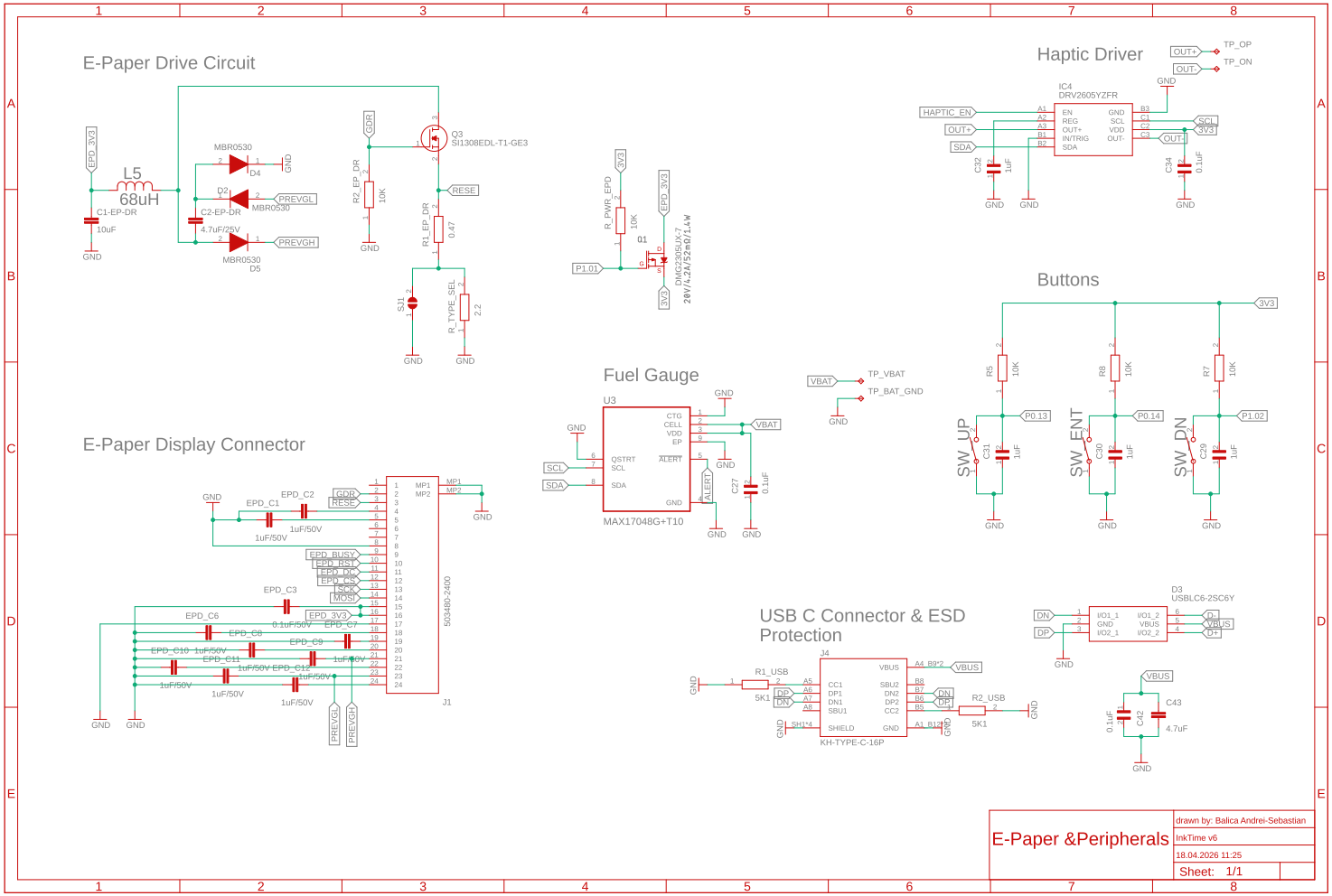
E-Paper Drive Circuit
L5
68uH
C1-EP-DR
10uF
MBR0530
D4
D2
C2-EP-DR
4.7uF/25V
MBR0530
D5
PREVGL
PREVGH
GDR
R2_EP_DR
10K
Q3
SI1308EDL-T1-GE3
RESE
R1_EP_DR
0.47
SJ1
R_TYPE_SEL
2.2
R_PWR_EPD
10K
Q1
DMG2305UX-7
P1.01
Haptic Driver
IC4
DRV2605YZFR
HAPTIC_EN
OUT+
SDA
OUT-
SCL
3V3
C32
1uF
C24
0.1uF
TP_OP
TP_ON
Buttons
R5
10K
R8
10K
R7
10K
SW_UP
SW_ENT
SW_DN
P0.13
P0.14
P1.02
C31
1uF
C30
1uF
C29
1uF
Fuel Gauge
U3
MAX17048G+T10
VBAT
SCL
SDA
ALERT
C27
0.1uF
TP_VBAT
TP_BAT_GND
E-Paper Display Connector
EPD_C1
EPD_C2
1uF/50V
EPD_C3
0.1uF/50V
EPD_C6
EPD_C7
EPD_C8
EPD_C9
EPD_C10
EPD_C11
EPD_C12
EPD_3V3
EPD_BUSY
EPD_RST
EPD_D/C
EPD_CS
SCK
MOSI
MP1
MP2
503480-2400
J1
USB C Connector & ESD Protection
J4
KH-TYPE-C-16P
R1_USB
5K1
R2_USB
5K1
DP
DN
VBUS
D3
USBLC6-2SC6Y
C42
4.7uF
C43
0.1uF
E-Paper &Peripherals
drawn by: Balica Andrei-Sebastian
InkTime v6
18.04.2026 11:25
Sheet: 1/1

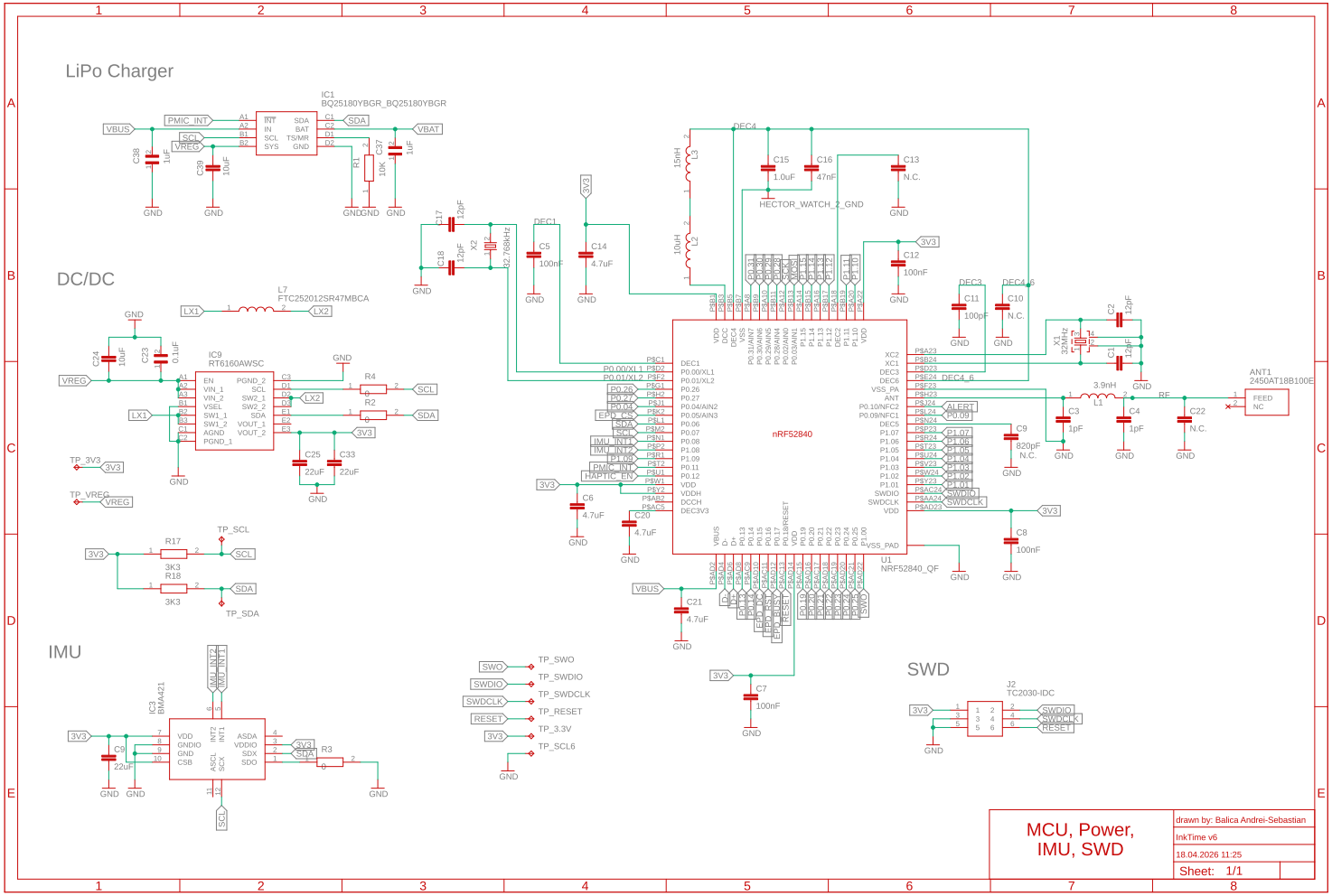
LiPo Charger
IC1
BQ25180YBGR_BQ25180YBGR
DC/DC
IC9
RT6160AWSC
L7
FTC252012SR47MBCA
IMU
IC3
BMA421
SWD
J2
TC2030-IDC
U1
NRF52840_QF
nRF52840
ANT1
2450AT18B100E
MCU, Power, IMU, SWD
drawn by: Balica Andrei-Sebastian
InkTime v6
18.04.2026 11:25
Sheet: 1/1