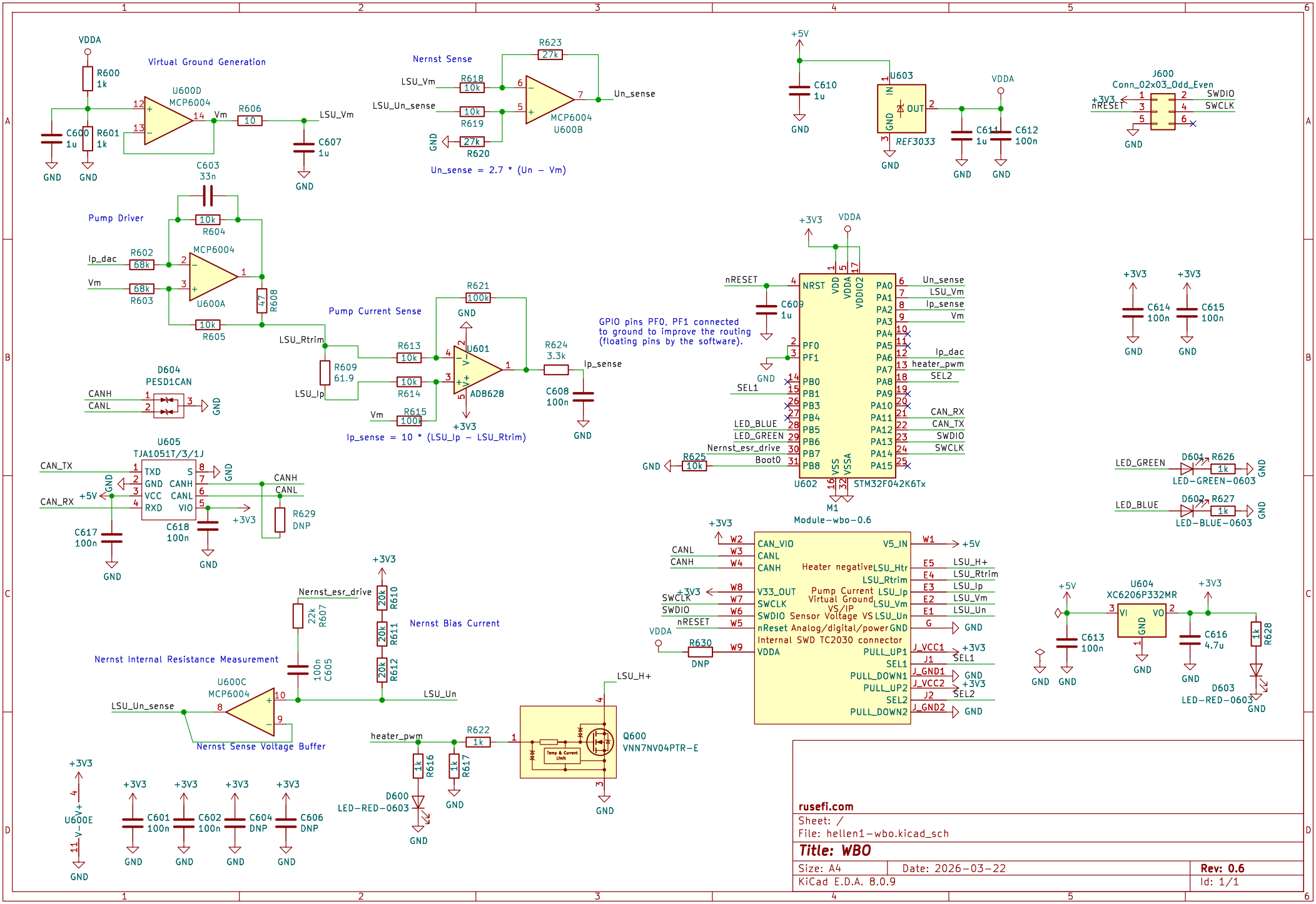

rusefi.com

Sheet: /

File: hellen1-wbo.kicad_sch

Title: WBO

Size: A4	Date: 2026-03-22	Rev: 0.6
KiCad E.D.A. 8.0.9		Id: 1/1