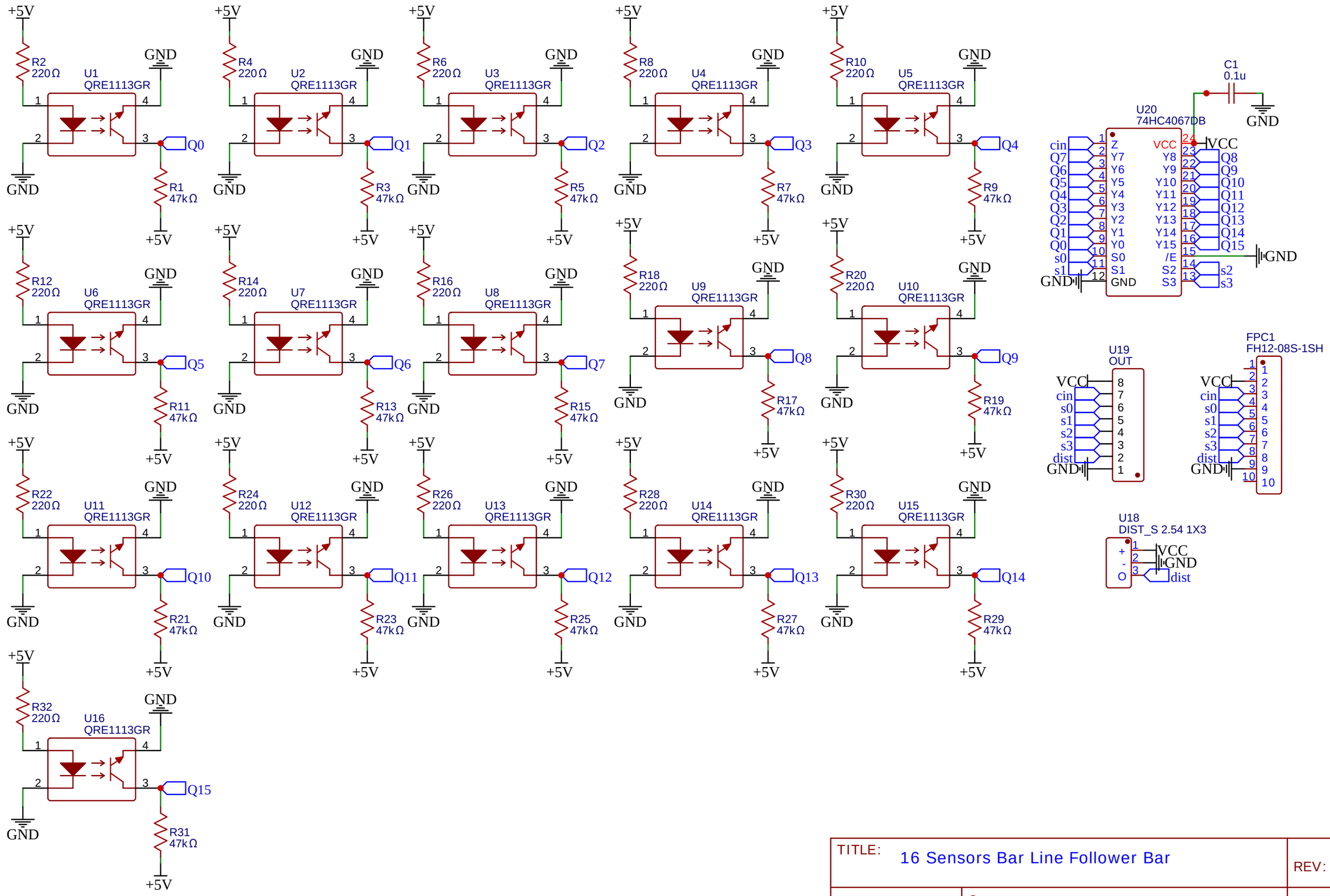

TITLE: 16 Sensors Bar Line Follower Bar		REV: 1.8
EasyEDA	Company: -	Sheet: 1/1
	Date: 2024-10-12	Drawn By: Popescu Filimon Andrei