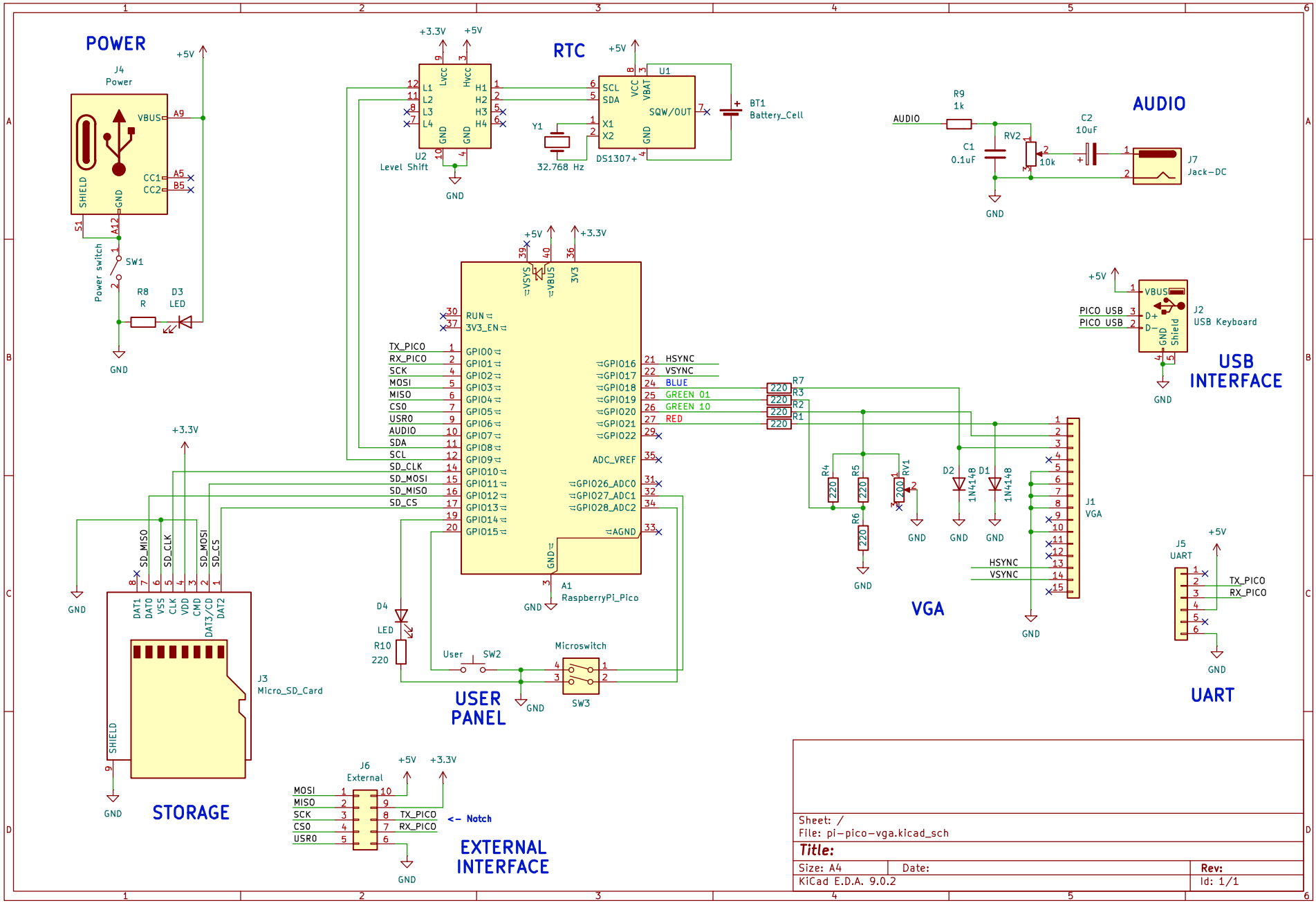
POWER
J4
Power
VBUS
A9
CC1
A5
CC2
B5
SHIELD
GND
S1
A12
Power switch
SW1
R8
R
D3
LED
+5V
GND
RTC
U2
Level Shift
Lvcc
Hvcc
L1
L2
L3
L4
H1
H2
H3
H4
+3.3V
+5V
U1
SCL
SDA
VCC
VBAT
SQW/OUT
X1
X2
DS1307+
Y1
32.768 Hz
BT1
Battery_Cell
AUDIO
R9
1k
C1
0.1uF
RV2
10k
C2
10uF
J7
Jack-DC
A1
RaspberryPi_Pico
VSYS
VBUS
3V3
RUN
3V3_EN
TX_PICO
RX_PICO
SCK
MOSI
MISO
CS0
USR0
AUDIO
SDA
SCL
SD_CLK
SD_MOSI
SD_MISO
SD_CS
GPIO16
GPIO17
GPIO18
GPIO19
GPIO20
GPIO21
GPIO22
ADC_VREF
GPIO26_ADC0
GPIO27_ADC1
GPIO28_ADC2
AGND
HSYNC
VSYNC
BLUE
GREEN 01
GREEN 10
RED
R7
R3
R2
R1
220
R4
R5
R6
RV1
200
D2
D1
1N4148
J1
VGA
USB INTERFACE
J2
USB Keyboard
PICO USB
D+
D-
Shield
J5
UART
TX_PICO
RX_PICO
VGA
D4
LED
R10
220
User
SW2
Microswitch
SW3
USER PANEL
J3
Micro_SD_Card
DAT1
DAT0
VSS
CLK
VDD
CMD
DAT3/CD
DAT2
SD_MISO
SD_CLK
SD_MOSI
SD_CS
SHIELD
STORAGE
J6
External
MOSI
MISO
SCK
CS0
USR0
TX_PICO
RX_PICO
<- Notch
EXTERNAL INTERFACE
Sheet: /
File: pi-pico-vga.kicad_sch
Title:
Size: A4
Date:
Rev:
KiCad E.D.A. 9.0.2
Id: 1/1