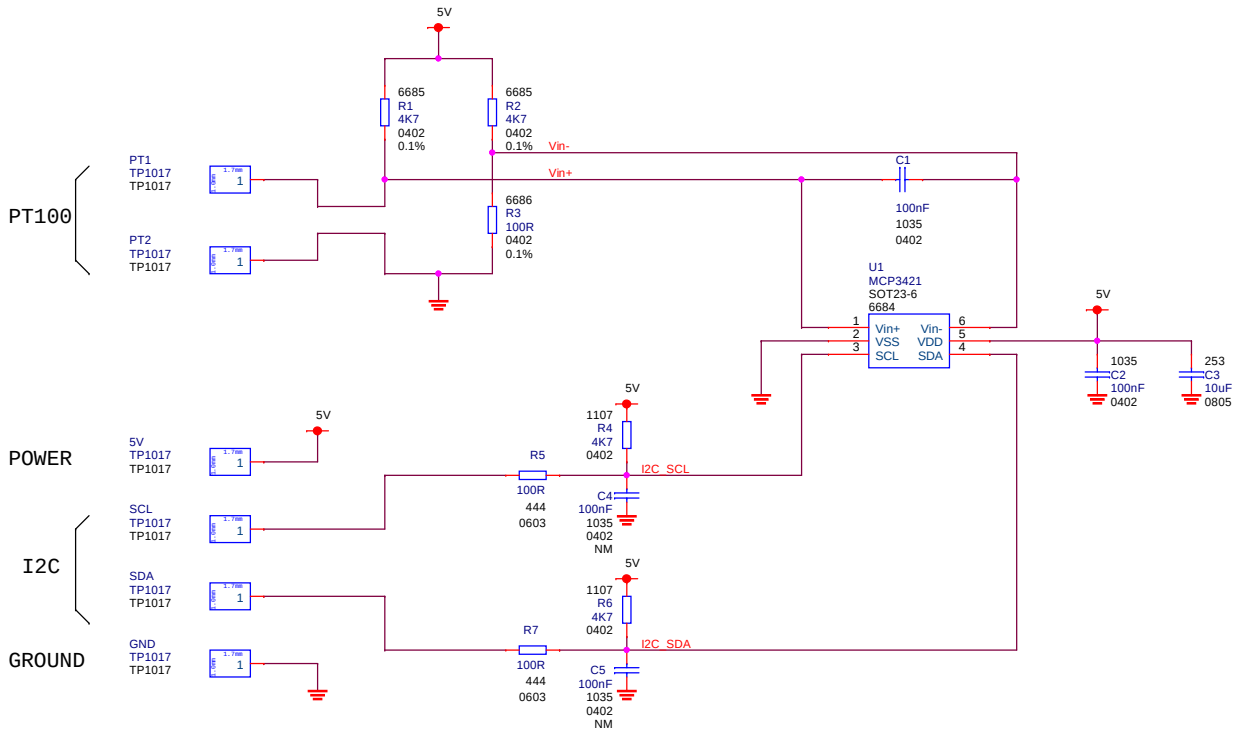

Istituto Italiano di Tecnologia Via Morego, 30 16163 - Genova	Project: P2014_08_TDB		
	Drawn: A. MURA	Checked: CHECKER_NAME	Approved: APPROVER_NAME
Document: TDB - Temperature Detector Board			Rev. 1
Size: A3	Date: Thursday, June 26, 2014		Sheet 2 of 2