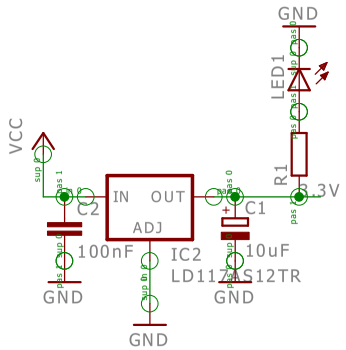

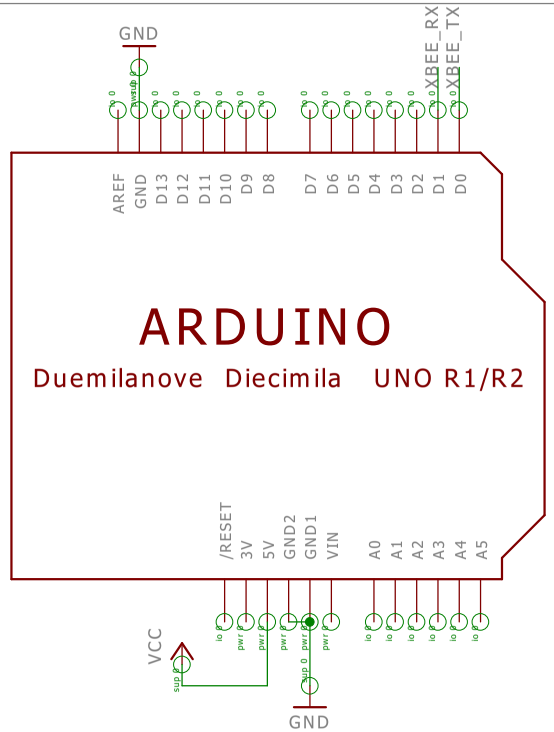

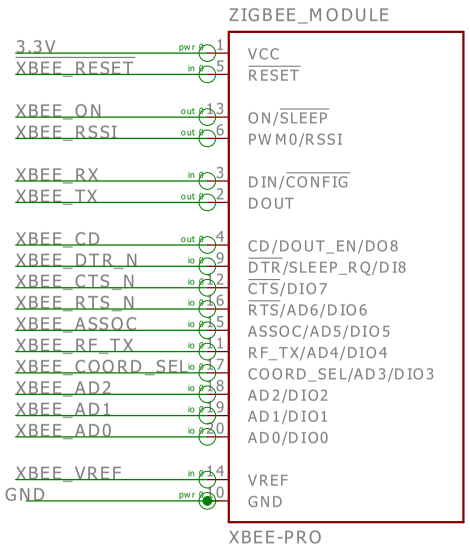

Connect the VIN pin to the 3.3V pin on the Arduino
Connect the GND pin to the GND pin on the Arduino
Connect RX to pin TX on the Arduino
Connect TX to pin RX on the Arduino

Modules	
WIMOS-motherboard	
23/01/2016 18:28	
Sheet: 1/1	