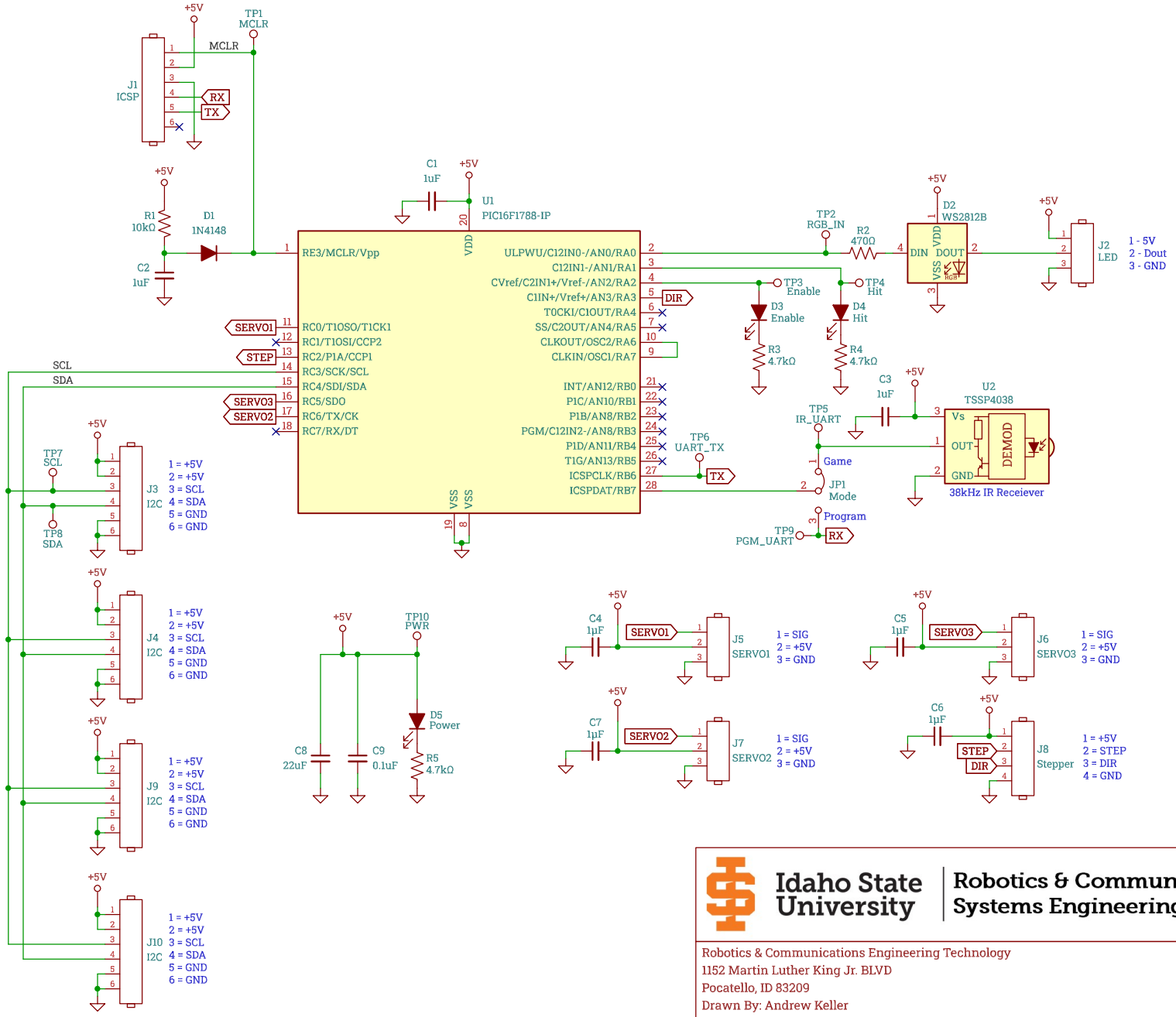

Idaho State University | Robotics & Communications Systems Engineering Technology

Robotics & Communications Engineering Technology
1152 Martin Luther King Jr. BLVD
Pocatello, ID 83209
Drawn By: Andrew Keller
Idaho State University

Title: Laser Arcade Slave

Size: A	Date: 2025-11-17	**Rev: B**
KiCad E.D.A. 9.0.5		Id: 1/1