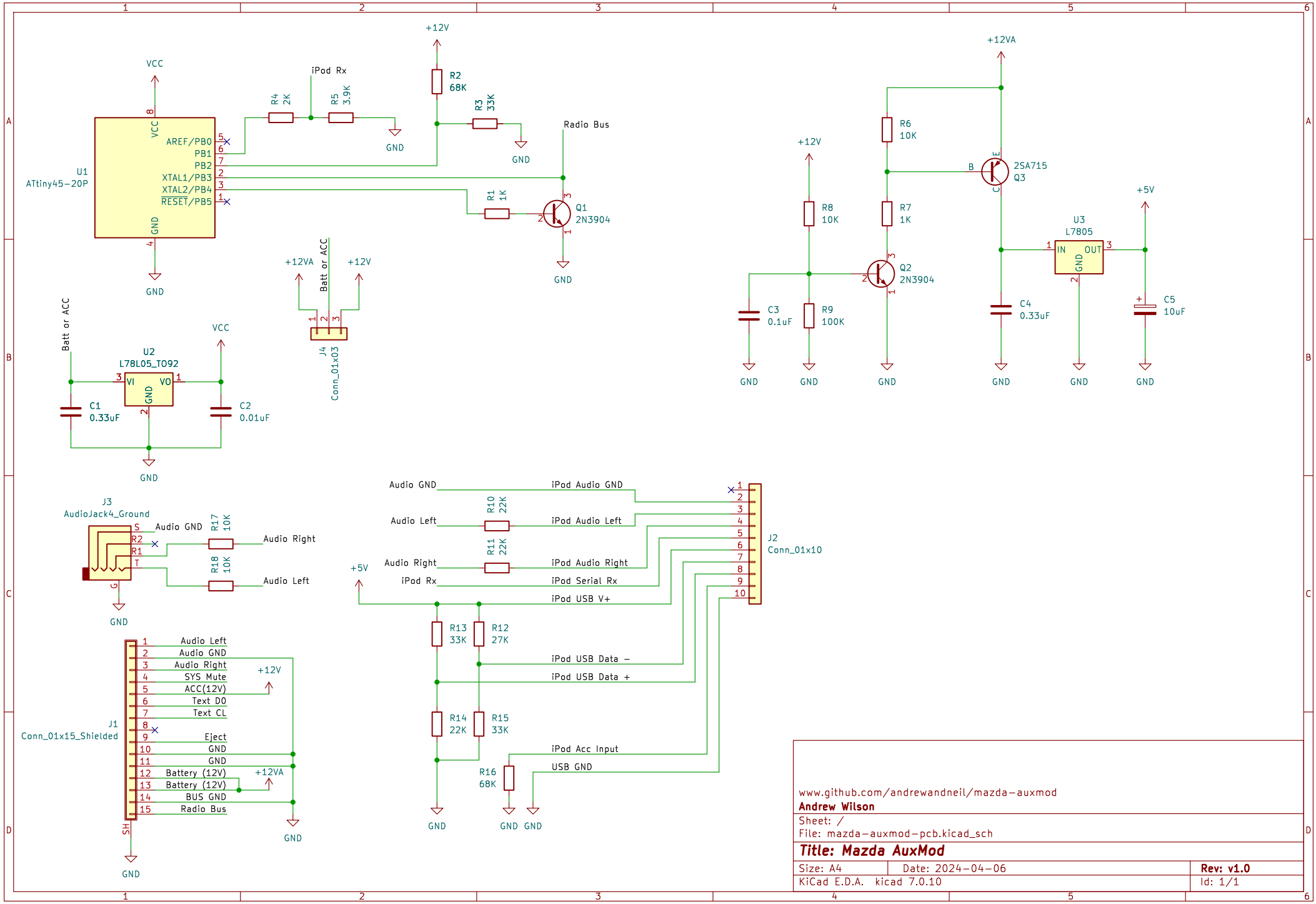

www.github.com/andrewandneil/mazda-auxmod

Andrew Wilson

Sheet: /

File: mazda-auxmod-pcb.kicad_sch

Title: Mazda AuxMod

Size: A4	Date: 2024-04-06	**Rev: v1.0**
KiCad E.D.A. kicad 7.0.10		Id: 1/1