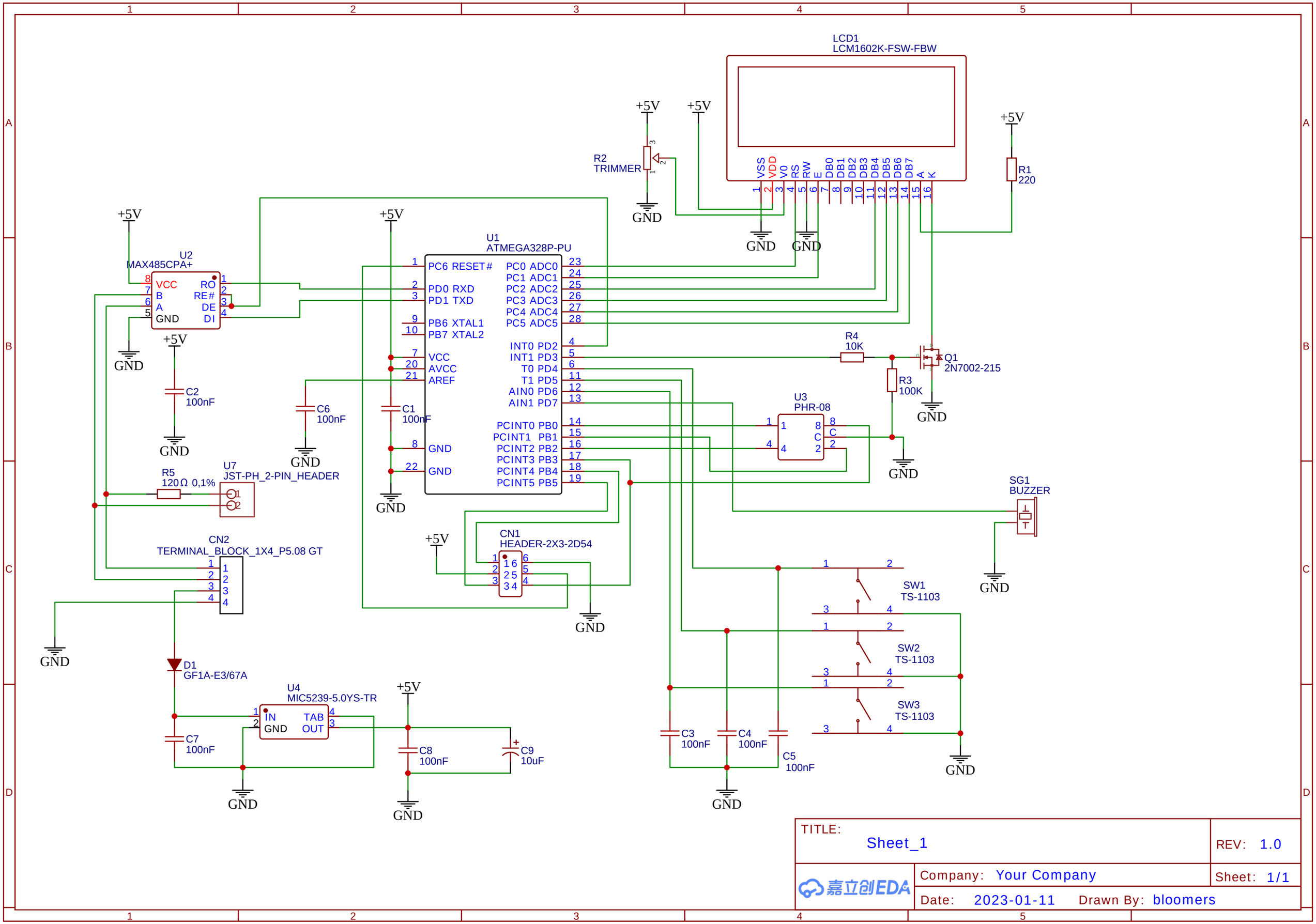

TITLE: Sheet_1	REV: 1.0
嘉立创EDA Company: Your Company	Sheet: 1/1
Date: 2023-01-11 Drawn By: bloomers	