KTJ SETS UP J REGISTER FOR MULTIPLICATION AND DIVISION AS FOLLOWS

FUNCTION	J5	J2	J1
12	1	0	1
13	1	1	0
J REG SET UP BY	$\overline{KTJ_5}$	$\overline{ETJ_2}$ FROM KTJ WHEN K2 = 1	$\overline{KTJ_1}$ FROM KTJ WHEN K2 = 0

ETJ SETS UP APPROPRIATE SCR OR B REGISTER ADDRESS IN J REGISTER AS FOLLOWS
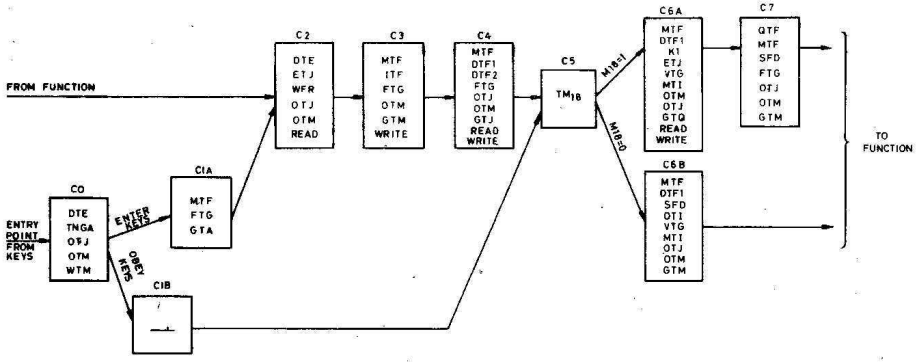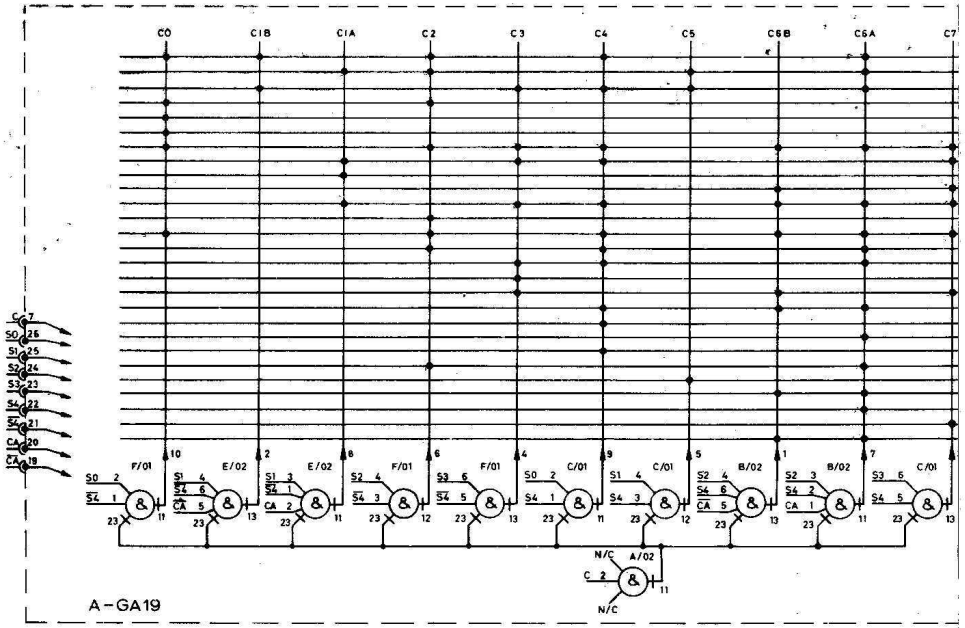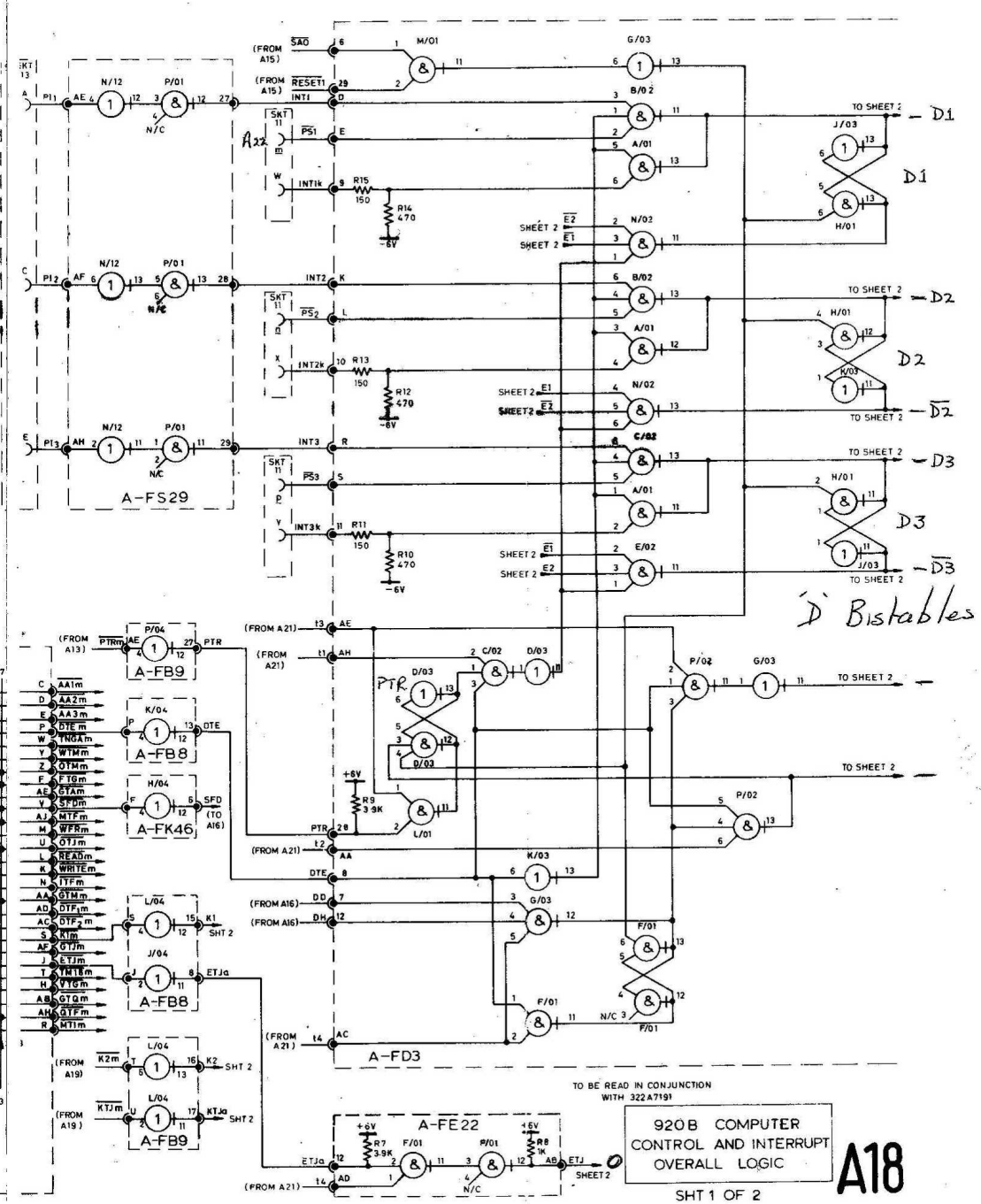
PRIORITY LEVEL	E1	E2	J3	J2	J1 FOR SCR	J1 FOR B REG
1(HIGHEST)	0	0	0	0	0	1
2	1	0	0	1	0	1
3	0	1	1	0	0	1
4(LOWEST)	1	1	1	1	0	1
J REG SET UP BY	$\overline{ETJ_3}$	$\overline{ETJ_2}$			$\overline{KTJ_1}$ FROM ETJ AND K1 = 1