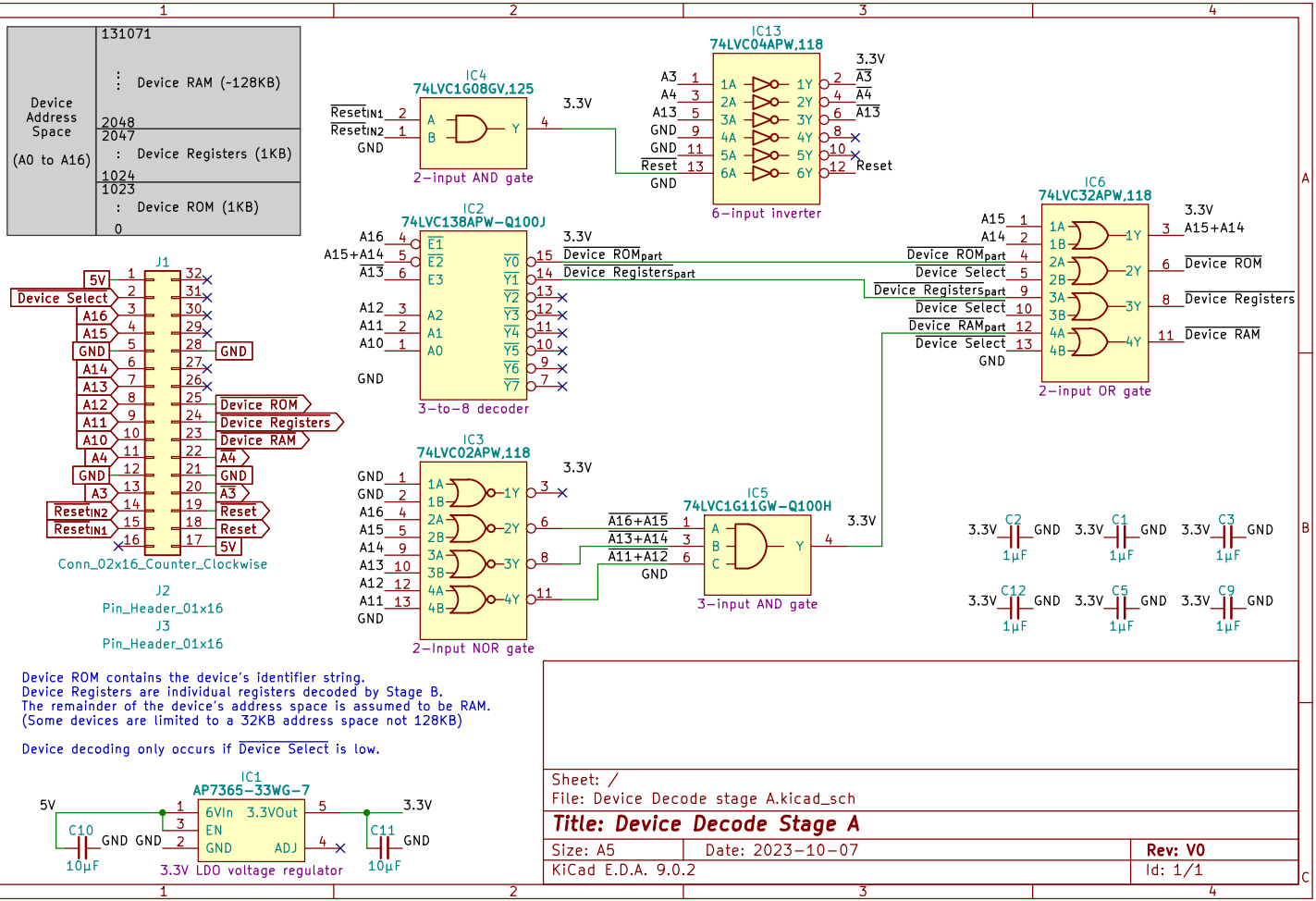
Device Address Space
(A0 to A16)
131071
Device RAM (~128KB)
2048
2047
Device Registers (1KB)
1024
1023
Device ROM (1KB)
0
IC4
74LVC1G08GV,125
2-input AND gate
IC13
74LVC04APW,118
6-input inverter
IC2
74LVC138APW-Q100J
3-to-8 decoder
IC6
74LVC32APW,118
2-input OR gate
IC3
74LVC02APW,118
2-Input NOR gate
IC5
74LVC1G11GW-Q100H
3-input AND gate
J1
Conn_02x16_Counter_Clockwise
J2
Pin_Header_01x16
J3
Pin_Header_01x16
Device ROM contains the device's identifier string.
Device Registers are individual registers decoded by Stage B.
The remainder of the device's address space is assumed to be RAM.
(Some devices are limited to a 32KB address space not 128KB)
Device decoding only occurs if Device Select is low.
IC1
AP7365-33WG-7
3.3V LDO voltage regulator
Sheet: /
File: Device Decode stage A.kicad_sch
Title: Device Decode Stage A
Size: A5
Date: 2023-10-07
Rev: V0
KiCad E.D.A. 9.0.2
Id: 1/1