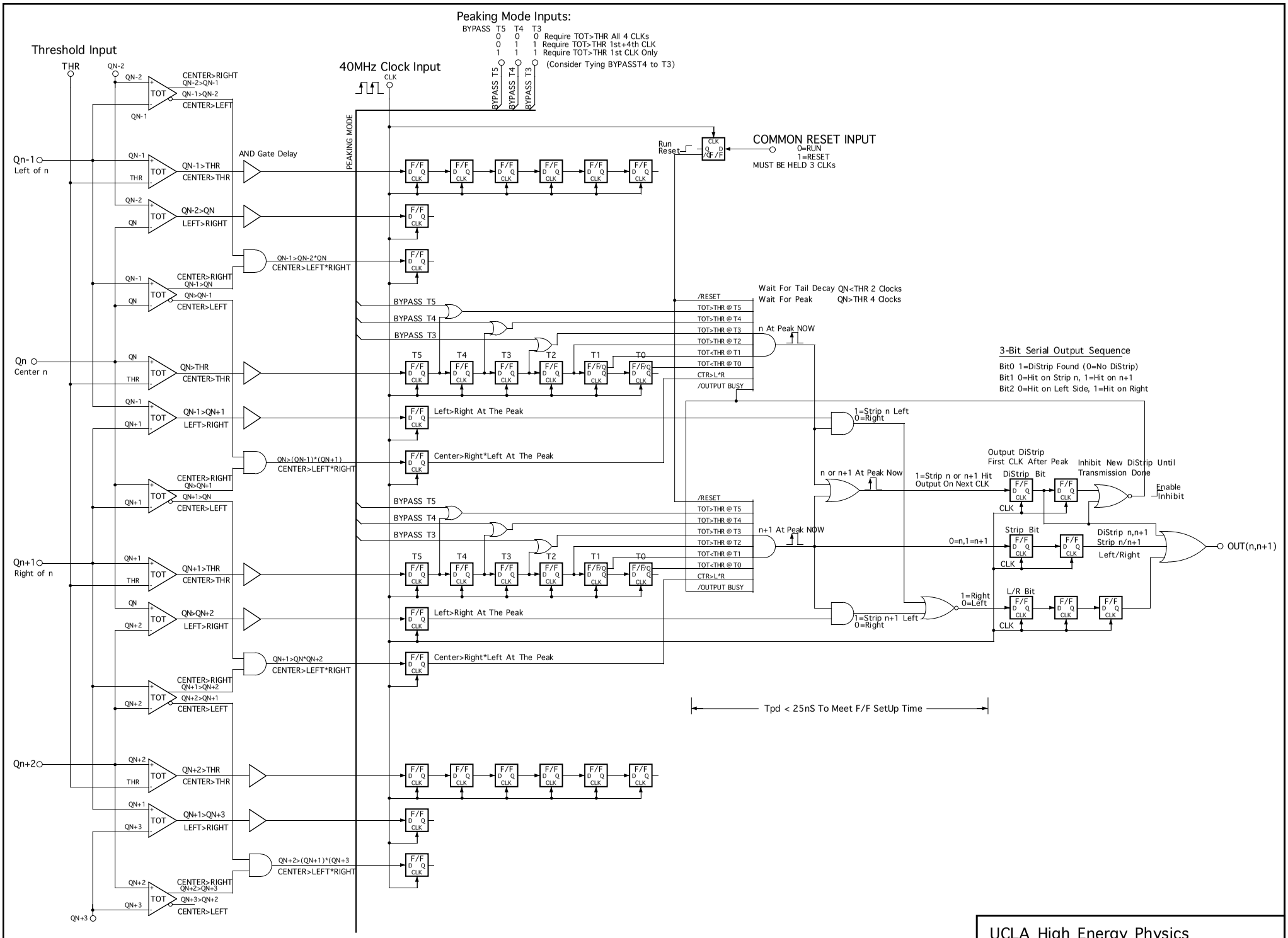

UCLA High Energy Physics
CMS CSC Cathode Comparator ASIC
7/9/97