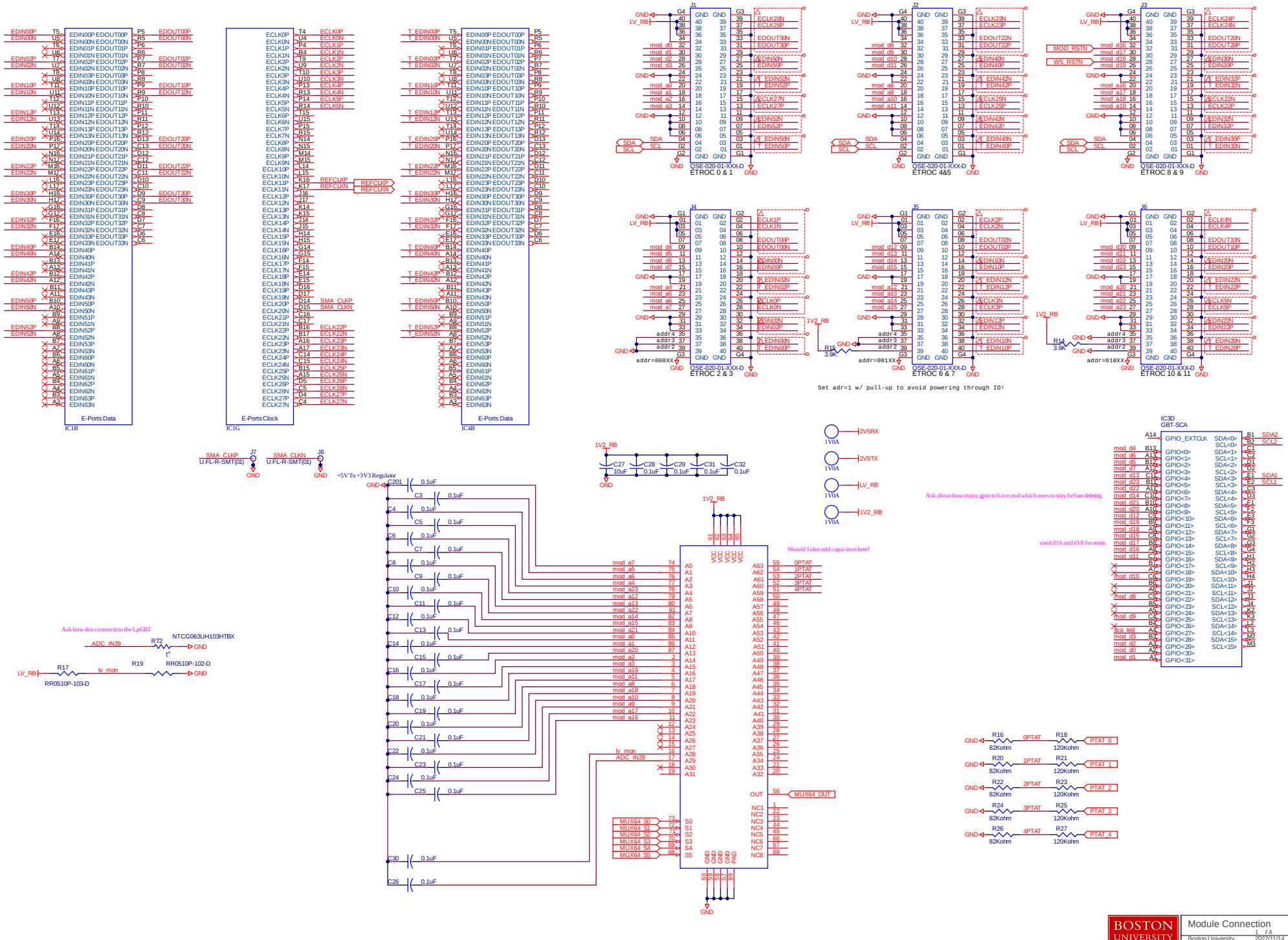
E-Ports Data
IC1B
E-Ports Clock
IC1G
E-Ports Data
IC4B
ETROC 0 & 1
ETROC 4&5
ETROC 8 & 9
ETROC 2 & 3
ETROC 6 & 7
ETROC 10 & 11
QSE-020-01-XXX-D
Set adr=1 w/ pull-up to avoid powering through IO!
+5V To +3V3 Regulator
Should I also add capacitors here?
Ask about how many gpio to have and which ones to stay before deleting
used d16 and d18 for resets
Ask how this connects to the LpGBT
NTCG063UH103HTBX
RR0510P-102-D
RR0510P-103-D
IC3D
GBT-SCA
MUX64_OUT
BOSTON UNIVERSITY
Module Connection
Boston University
Rev v2.1
2022/11/14
ap sw pg

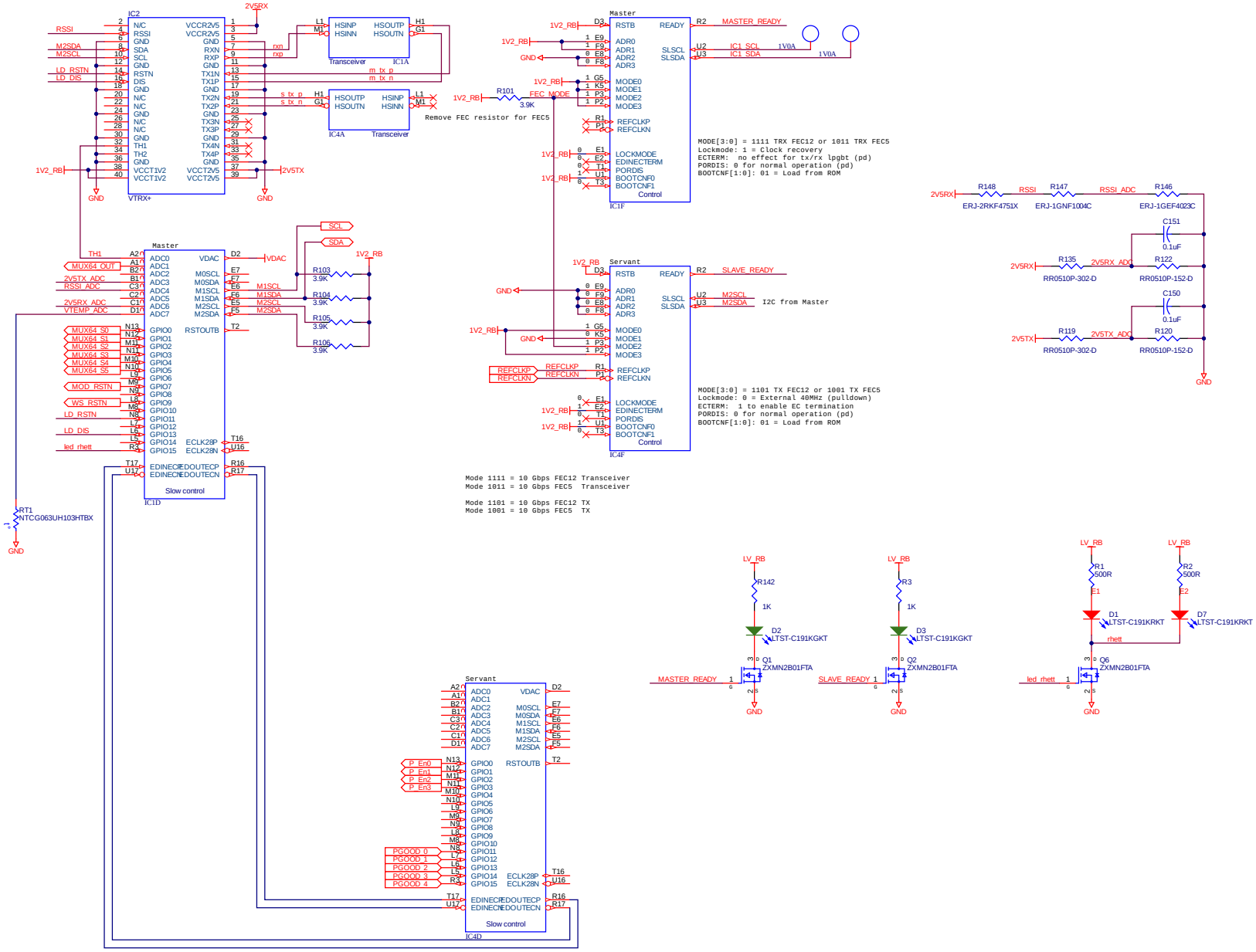

BOSTON UNIVERSITY

lpGBT

Boston University
Rev v2.1

2 / 4
2022/11/14
ap sw pg

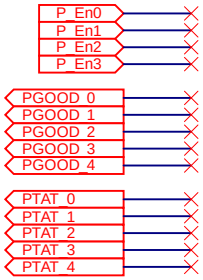

BOSTON UNIVERSITY

LINPOL12
PowerBoard_Conn
Boston University
Rev v2.1
2022/11/14
ap sw pg

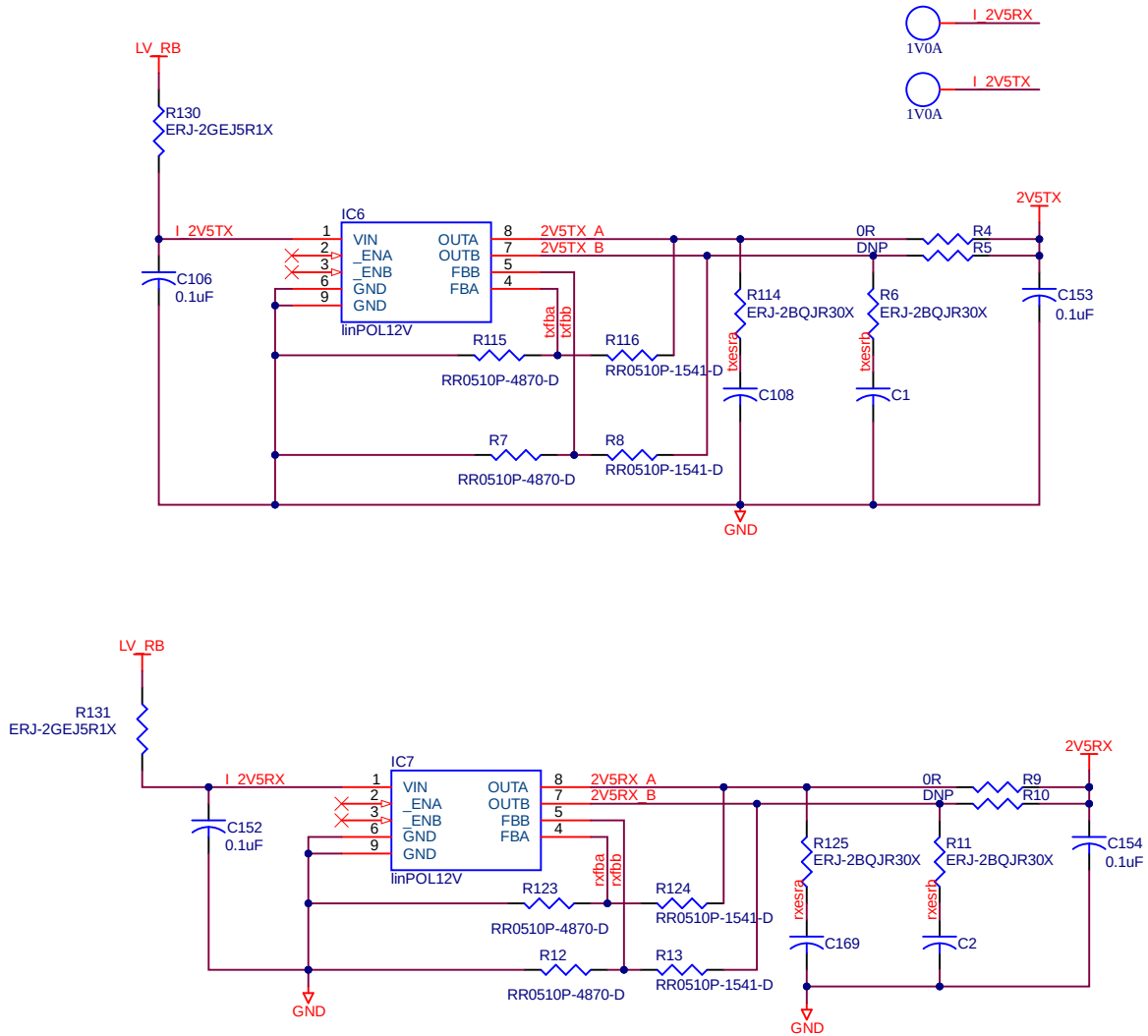

A resistance towards ground must be placed to avoid a TID-induced peak at 1-2Mrad. The value of the resistance must be set to have at least 1.1mA always flowing in the regulator.

Between this pin and ground a series of a resistor of 300mOhm and a capacitor of 10uF has to be placed for stability purpose.

BOSTON UNIVERSITY

LINPOL12

3 / 4

Boston University
Rev v2.1

2022/11/14
ap sw pg

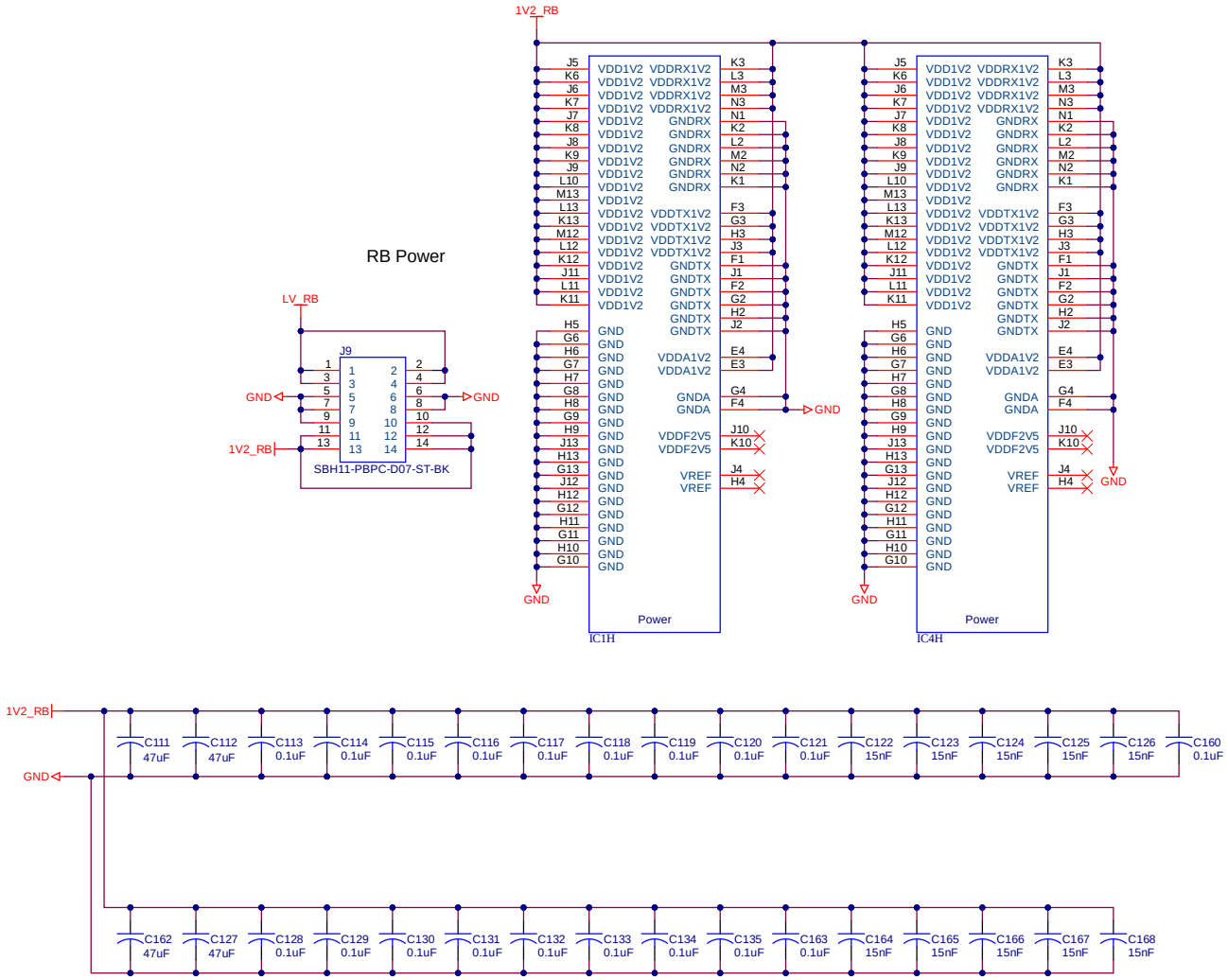

BOSTON UNIVERSITY

Power

Boston University
Rev v2.1

4 / 4
2022/11/14
ap sw pg