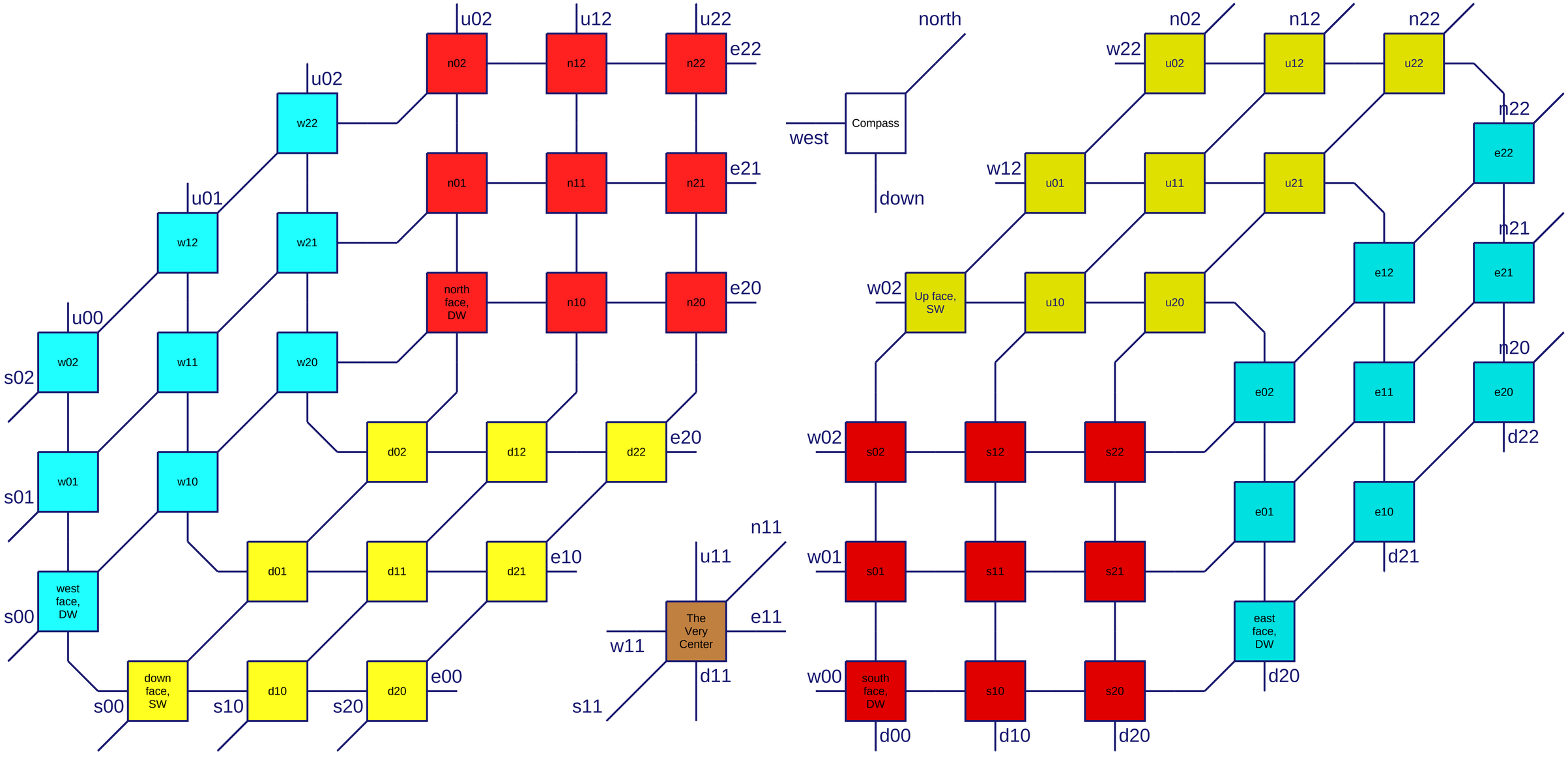
u02
u12
u22
e22
n02
n12
n22
u02
w22
e21
n01
n11
n21
u01
w12
w21
e20
north face, DW
n10
n20
u00
w02
w11
w20
s02
d02
d12
d22
e20
w01
w10
s01
d01
d11
d21
e10
west face, DW
s00
down face, SW
d10
d20
e00
s00
s10
s20
n11
u11
e11
The Very Center
w11
d11
s11
north
Compass
west
down
n02
n12
n22
w22
u02
u12
u22
m22
e22
w12
u01
u11
u21
m21
e12
e21
w02
Up face, SW
u10
u20
m20
e02
e11
e20
d22
w02
s02
s12
s22
e01
e10
w01
s01
s11
s21
d21
east face, DW
w00
south face, DW
s10
s20
d20
d00
d10
d20