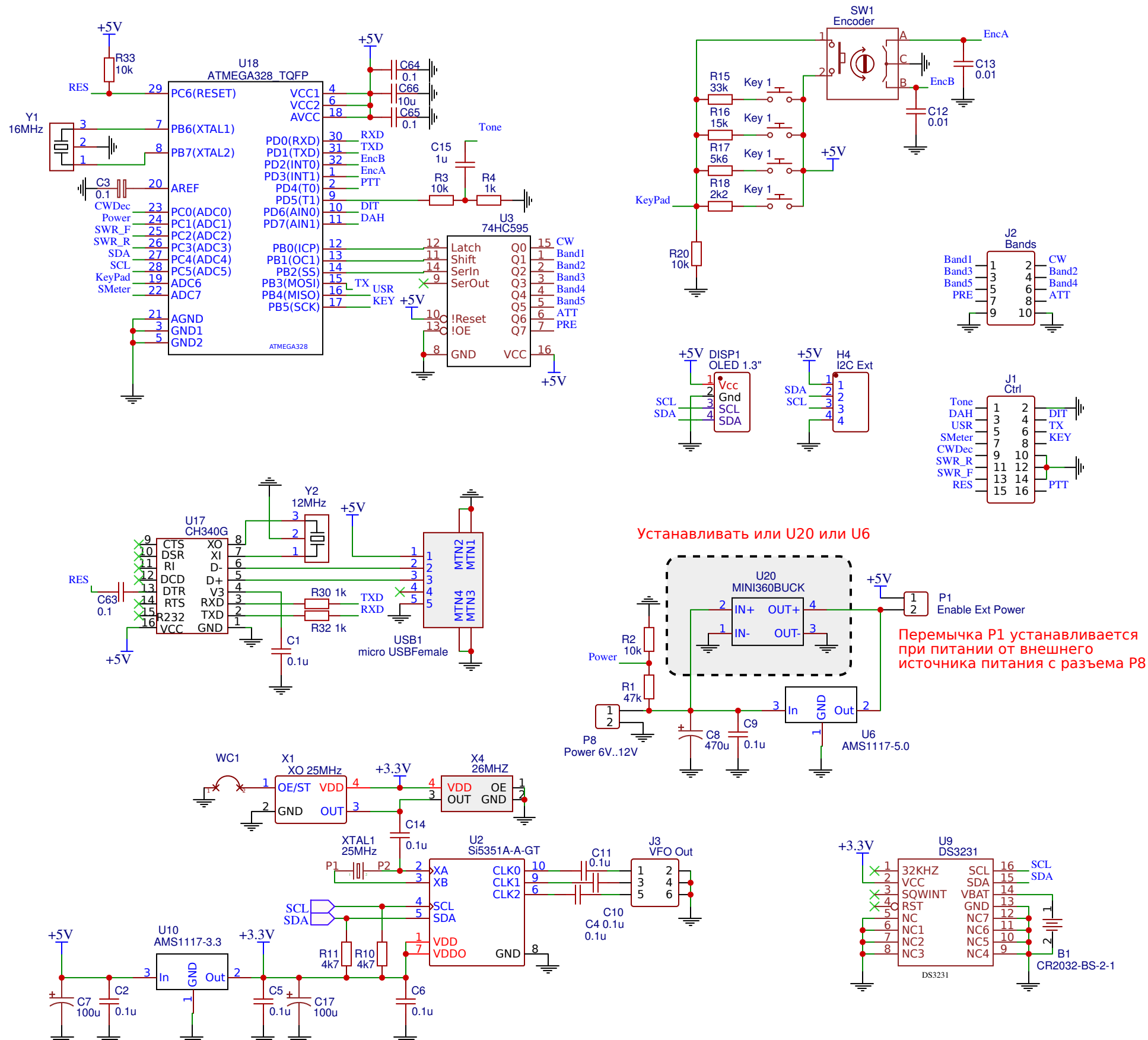

TITLE: Nano VFO 3 OLED	REV: 3.1
Company: www.dspview.com	Sheet: 1/1
Date: 2 jan 2021 Drawn By: UR5FFR	

EasyEDA