COMMODORE 64

SCHEMATIC DIAGRAM

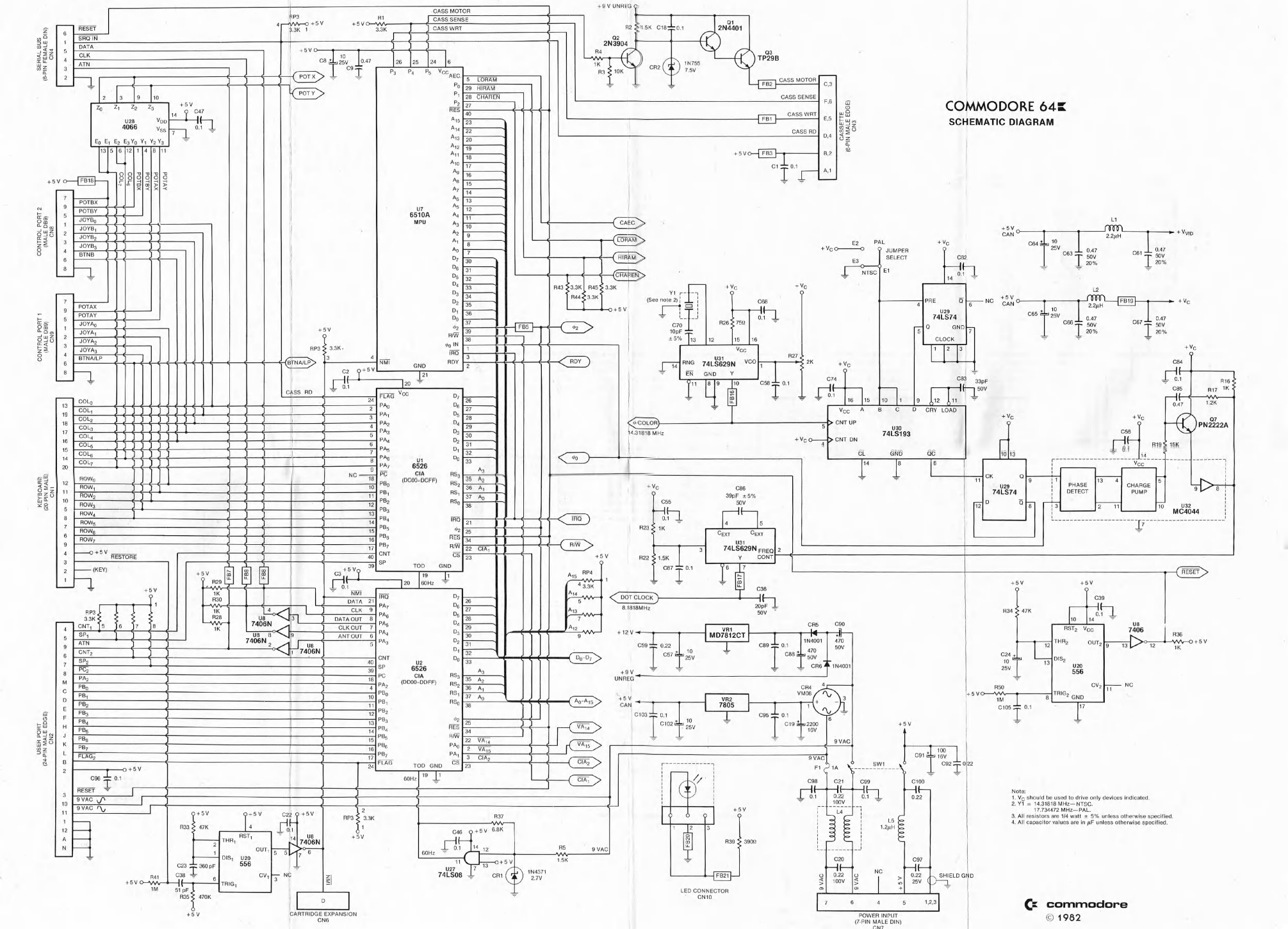

commodore

© 1982