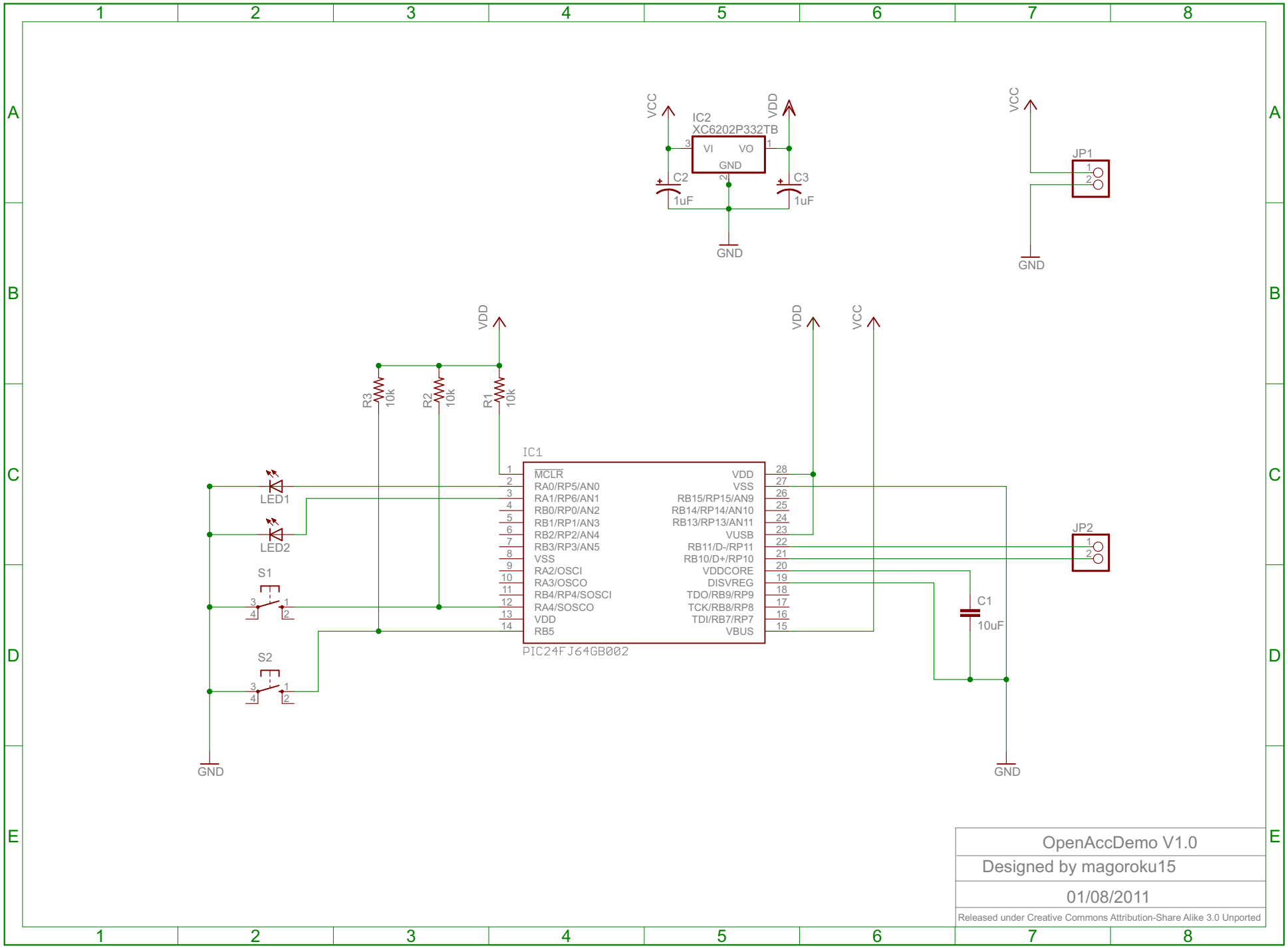

2012/01/26 0:25:26 f=0.95 C:\Users\hideo\Desktop\OpenAccDemo\Doc\OpenAccDemo.sch (Sheet: 1/1)